Моторы

Технические характеристики

По вопросам продаж и поддержки обращайтесь:

Алматы (7273)495-231
Архангельск (8182)63-90-72
Астрахань (8512)99-46-04
Барнаул (3852)73-04-60
Белгород (4722)40-23-64
Брянск (4832)59-03-52
Владивосток (423)249-28-31
Волгоград (844)278-03-48
Вологда (8172)26-41-59
Воронеж (473)204-51-73
Екатеринбург (343)384-55-89
Иваново (4932)77-34-06
Ижевск (3412)26-03-58
Иркутск (395)279-98-46
Казань (843)206-01-48
Калининград (4012)72-03-81
Калуга (4842)92-23-67
Кемерово (3842)65-04-62
Киров (8332)68-02-04
Краснодар (861)203-40-90
Красноярск (391)204-63-61
Курск (4712)77-13-04
Липецк (4742)52-20-81
Магнитогорск (3519)55-03-13
Москва (495)268-04-70
Мурманск (8152)59-64-93
Набережные Челны (8552)20-53-41
Нижний Новгород (831)429-08-12
Новокузнецк (3843)20-46-81
Новосибирск (383)227-86-73
Омск (3812)21-46-40
Орел (4862)44-53-42
Оренбург (3532)37-68-04
Пенза (8412)22-31-16
Пермь (342)205-81-47
Ростов-на-Дону (863)308-18-15
Рязань (4912)46-61-64
Самара (846)206-03-16
Санкт-Петербург (812)309-46-40
Саратов (845)249-38-78
Севастополь (8692)22-31-93
Симферополь (3652)67-13-56
Смоленск (4812)29-41-54
Сочи (862)225-72-31
Ставрополь (8652)20-65-13
Сургут (3462)77-98-35
Тверь (4822)63-31-35
Томск (3822)98-41-53
Тула (4872)74-02-29
Тюмень (3452)66-21-18
Ульяновск (8422)24-23-59
Уфа (347)229-48-12
Хабаровск (4212)92-98-04
Челябинск (351)202-03-61
Череповец (8202)49-02-64
Ярославль (4852)69-52-93

Россия (495)268-04-70
Киргизия (996)312-96-26-47
Казахстан (7172)727-132

rhx@nt-rt.ru || https://rexroth.nt-rt.ru/

The complete Mobile Hydraulics Catalog from Bosch Rexroth at a glance:

Part 1	Pumps	Axial Piston Pumps, External Gear Pumps, Electrohydraulic Pumps, Gerotor Pumps	RE 90010-01
Part 2	Motors, Gears	Axial Piston Motors, External Gear Motors, Radial Piston Motors, Gears	RE 90010-02
Part 3	Mobile Controls	Control Blocks, Valve Modules, Pilot Control Devices, Power Brake Valves	RE 90010-03
Part 4	Mobile Electronics, Accumulators, Filters	Controllers, Application Software, Tools, Sensors, Displays, Video Cameras, Accumulators, Filters, Oil Measurement Technology	RE 90010-04
Part 5	Compact Hydraulics	Mechanical, Solenoid and Proportional Cartridge Valves, Integrated Circuits	RE 90010-05
Part 6	Compact Hydraulics	Load Holding/Motion Control Valves, Compact Directional Valves, Compact Power Modules	RE 90010-06

Contents

General 7 1

Axial piston motors

Fixed motors 95 2

Variable motors 231 3

Accessories 635 4

External gear motors 677 5

Radial piston motors 737 6

Gears 867 7

Contents

Designation	Type	Size	Series	Data sheet	Page
General					
Hydraulic fluids based on mineral oils and related hydrocarbons				90220	9
Environmentally acceptable hydraulic fluids				90221	25
Fire-resistant, water-free hydraulic fluids (HFDR/HFDU)				90222	39
Fire-resistant hydraulic fluids - water-containing (HFAE, HFAS, HFB, HFC)				90223	55
Axial piston units for operation with fire-resistant hydraulic fluids – water-free and water-containing (HFDR, HFDU, HFA, HFB, HFC)				90225	71
Rating of hydraulic fluids for Rexroth hydraulic components (pumps and motors)				90235	87
Axial piston motors					
Fixed motor	A2FM	5...1000	6x	91001	97
Fixed plug-in motor	A2FE	28...355	6x	91008	143
Fixed motor	A2FM/A2FE	45...107	70	91071	167
Fixed motor	A4FM	22...500	10/30/32	91120	191
Fixed motor	A10FM/A10FE	10...63	52	91172	203
Variable motor	A6VM	28...1000	63	91604	233
Variable motor	A6VM	55...200	65	91607	289
Variable motor	A6VM	60...215	71	91610	365
Variable motor	A6VM	280	71	91611	441
Variable plug-in motor	A6VE	28...250	63	91606	467
Variable plug-in motor	A6VE	55...200	65	91615	507
Variable plug-in motor	A6VE	60...215	71	91616	549
Variable motor	A10VM/E	28...85	52	91703	591
Reversible axial piston variable motor for hydrostatic fan drives	A10VER	30...45	52	91706	619
Counterbalance valve for travel drives, winch drives and turas drives	BVD	20, 25	41	95522	637
Counterbalance valve for winch drives	BVE	25	51	95525	649
Counterbalance valve	BVD/BVE	32	51	95528	661
External gear motors					
External gear motor High Performance	AZMB	1...7.1	3x	14027	679
External gear motor High Performance	AZMF AZMN AZMG	8...22 25...28 22...45	1x	14026	697
Radial piston motors		**Frame size**			
Radial piston motor for frame integrated drives	MCR-A	3...15	3x	15195	739
Radial piston motor for compact drives	MCR-C	20	33	15197	753
Radial piston motor for wheel drives	MCR-F	3...15	3x	15198	767
Radial piston motor for integrated drives	MCR-H	3...20	33	15199	787
Radial piston motor for hydraulic drive assist	MCR-R	10	41	15223	803
Radial piston motor for track drives	MCR-T	5...10	33	15221	811
Radial piston motor for heavy duty wheel drives	MCR-W	3...10	33	15200	823
Radial piston motor for slew drives	MCR-X	3...5	3x	15214	841
Radial piston motors for industrial applications	MCR-D/MCR-E	3...10	33	15196	851

Designation	Output torque	Data sheet	Page
Gears			
Hydrostatic drives HYDROTRAC GFT	9...450 kNm	77110	869
Compact hydrostatic drives HYDROTRAC GFT 45 T2/T3	45 kNm	77115	889
Drive unit for crawler track equipment, series 2000 – HYDROTRAC GFT	13,5...42,5 kNm	77116	893
Planetary gearboxes for mobile applications HYDROTRAC GFT 8000 Series 40	10...130 kNm	77117	895
Planetary gearboxes for mobile applications HYDROTRAC GFT 8130 / 8140 Series 30	20...30 kNm	77128	899
Swing drives MOBILEX GFB	4...6,83 kNm	77201	903
Drive unit for revolving superstructures, series 2000 – MOBILEX GFB	4...14,5 kNm	77206	919
Winch drives MOBILEX GFT-W	14...325 kNm	77502	921

General

Designation	Data sheet	Page
Hydraulic fluids based on mineral oils and related hydrocarbons	90220	9
Environmentally acceptable hydraulic fluids	90221	25
Fire-resistant, water-free hydraulic fluids (HFDR/HFDU)	90222	39
Fire-resistant hydraulic fluids - water-containing (HFAE, HFAS, HFB, HFC)	90223	55
Axial piston units for operation with fire-resistant hydraulic fluids – water-free and water-containing (HFDR, HFDU, HFA, HFB, HFC)	90225	71
Rating of hydraulic fluids for Rexroth hydraulic components (pumps and motors)	90235	87

Hydraulic fluids based on mineral oils and related hydrocarbons

RE 90220/05.12 **1**/16
Replaces: 05.10

Application notes and requirements for Rexroth hydraulic components

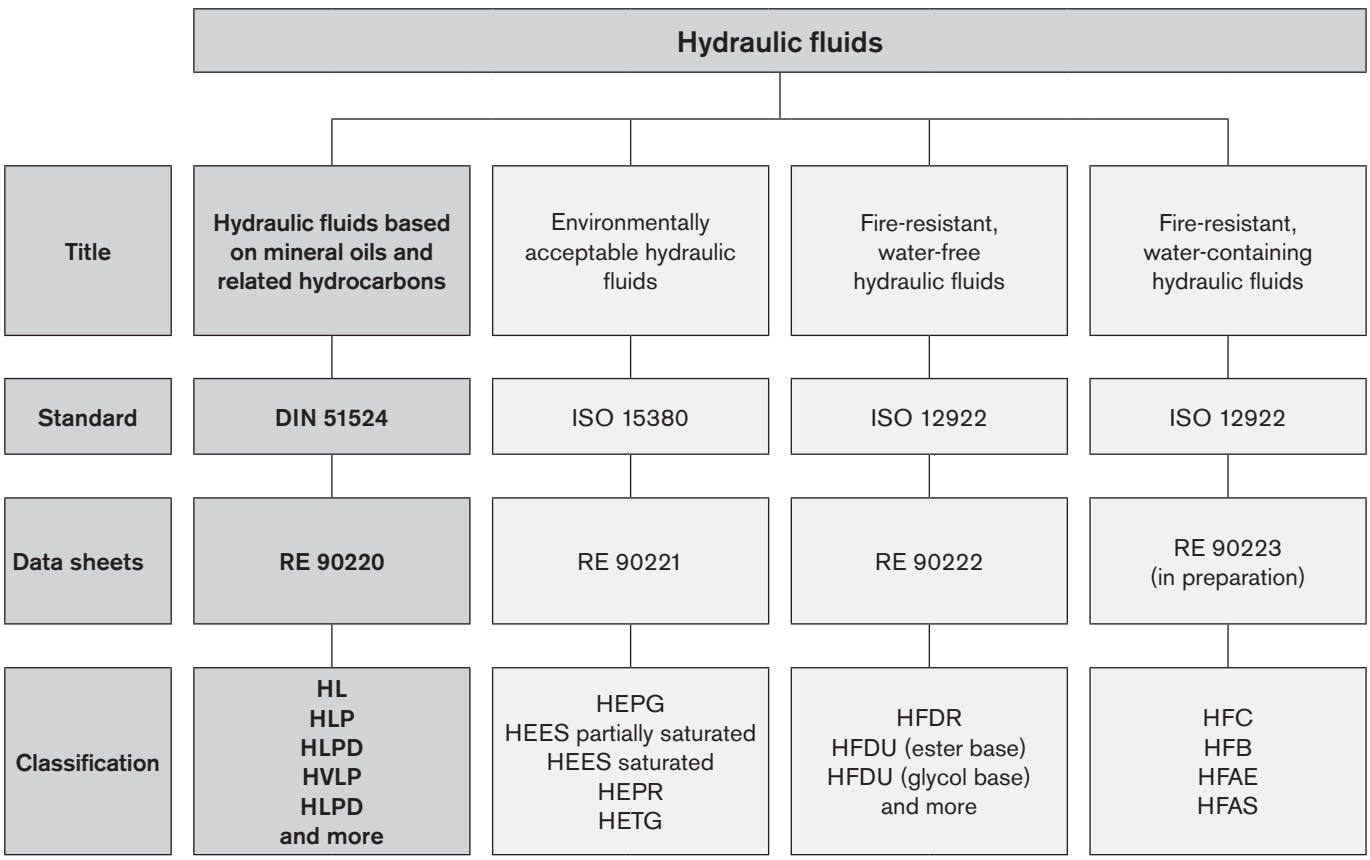

Contents

1 Basic information 3
1.1 General instructions 3
1.2 Scope 3
1.3 Safety instructions 3
2 Solid particle contamination and cleanliness levels 4
3 Selection of the hydraulic fluid 5
3.1 Selection criteria for the hydraulic fluid 5
3.1.1 Viscosity 5
3.1.2 Viscosity-temperature behavior 5
3.1.3 Wear protection capability 6
3.1.4 Material compatibility 6
3.1.5 Aging resistance 6
3.1.6 Air separation ability (ASA) 6
3.1.7 Demulsifying ability and water solubility 6
3.1.8 Filterability 6
3.1.9 Corrosion protection 6
3.1.10 Additivation 7
3.2 Classification and fields of application 7
4 Hydraulic fluids in operation 9
4.1 General 9
4.2 Storage and handling 9
4.3 Filling of new systems 9
4.4 Hydraulic fluid changeover 9
4.5 Mixing and compatibility of different hydraulic fluids 9
4.6 Re-additivation 9
4.7 Foaming behavior 9
4.8 Corrosion 10
4.9 Air 10
4.10 Water 10
4.11 Fluid servicing, fluid analysis and filtration 10
5 Disposal and environmental protection 11
6 Other hydraulic fluids based on mineral oil and related hydrocarbons 12
7 Glossary 15

1 Basic information

1.1 General instructions

The hydraulic fluid is the common element in any hydraulic component and must be selected very carefully. Quality and cleanliness of the hydraulic fluid are decisive factors for the operational reliability, efficiency and service life of a system.

Hydraulic fluids must conform, be selected and used in accordance with the generally acknowledged rules of technology and safety provisions. Reference is made to the country-specific standards and directives (in Germany the directive of the Employer's Liability Insurance Association BGR 137).

This data sheet includes recommendations and regulations concerning the selection, operation and disposal of hydraulic fluids based on mineral oils and related hydrocarbons in the application of Rexroth hydraulic components.

The individual selection of hydraulic fluid or the choice of classification are the responsibility of the operator.

It is the responsibility of the user to ensure that appropriate measures are taken for safety and health protection and to ensure compliance with statutory regulations. The recommendations of the lubricant manufacturer and the specifications given in the safety data sheet are to be observed when using hydraulic fluid.

This data sheet does not absolve the operator from verifying the conformity and suitability of the respective hydraulic fluid for his system. He is to ensure that the selected fluid meets the minimum requirements of the relevant fluid standard during the whole of the period of use.

Other regulations and legal provisions may also apply. The operator is responsible for their observance, e.g. EU directive 2004/35/EG and their national implementations. In Germany the Water Resources Act (WHG) is also to be observed.

We recommend that you maintain constant, close contact with lubricant manufacturers to support you in the selection, maintenance, care and analyses.

When disposing of used hydraulic fluids, apply the same care as during use.

1.2 Scope

This data sheet must be observed when using hydraulic fluids based on mineral oils and related hydrocarbons in Bosch Rexroth hydraulic components.

Please note that the specifications of this data sheet may be restricted further by the specifications given in the product data sheets for the individual components.

The use of the individual hydraulic fluids in accordance with the intended purpose can be found in the safety data sheets or other product description documents of the lubricant manufacturers. In addition, each use is to be individually considered.

Rexroth hydraulic components may only be operated with hydraulic fluids based on mineral oils and related hydrocarbons according to DIN 51524 if specified in the respective component data sheet or if Rexroth approval for use is furnished.

Notes:
In the market overview RE 90220-01, hydraulic fluid based on mineral oil are described which, according to the information of the lubricant manufacturer, feature the respective parameters of the current requirements standard DIN 51524 and other parameters which are of relevance for suitability in connection with Rexroth components.

These specifications are not checked or monitored by Bosch Rexroth. The list in the market overview does not therefore represent a recommendation on the part of Rexroth or approval of the respective hydraulic fluid for use with Rexroth components and does not release the operator from his responsibility regarding selection of the hydraulic fluid.

Bosch Rexroth will accept no liability for its components for any damage resulting from failure to comply with the notes below.

1.3 Safety instructions

Hydraulic fluids can constitute a risk for persons and the environment. These risks are described in the hydraulic fluid safety data sheets. The operator is to ensure that a current safety data sheet for the hydraulic fluid used is available and that the measures stipulated therein are complied with.

2 Solid particle contamination and cleanliness levels

Solid particle contamination is the major reason for faults occurring in hydraulic systems. It may lead to a number of effects in the hydraulic system. Firstly, single large solid particles may lead directly to a system malfunction, and secondly small particles cause continuous elevated wear.

For hydraulic fluids, the cleanliness level is given as a three-digit numerical code in accordance with ISO 4406. This numerical code denotes the number of particles present in a hydraulic fluid for a defined quantity. Moreover, foreign solid matter is not to exceed a mass of 50 mg/kg (gravimetric examination according to ISO 4405).

In general, compliance with a minimum cleanliness level of 20/18/15 in accordance with ISO 4406 or better is to be maintained in operation. Special servo valves demand improved cleanliness levels of at least 18/16/13. A reduction in cleanliness level by one level means half of the quantity of particles and thus greater cleanliness. Lower numbers in cleanliness levels should always be striven for and extend the service life of hydraulic components. The component with the highest cleanliness requirements determines the required cleanliness of the overall system. Please also observe the specifications in table 1: "Cleanliness levels according to ISO 4406" and in the respective data sheets of the various hydraulic components.

Hydraulic fluids frequently fail to meet these cleanliness requirements on delivery. Careful filtering is therefore required during operation and in particular, during filling in order to ensure the required cleanliness levels. Your lubricant manufacturer can tell you the cleanliness level of hydraulic fluids as delivered. To maintain the required cleanliness level over the operating period, you must use a reservoir breather filter. If the environment is humid, take appropriate measures, such as a breather filter with air drying or permanent off-line water separation.

Note: the specifications of the lubricant manufacturer relating to cleanliness levels are based on the time at which the container concerned is filled and not on the conditions during transport and storage.

Further information about contamination with solid matter and cleanliness levels can be found in brochure RE 08016.

Table 1: Cleanliness levels according to ISO 4406

Particles per 100 ml		Scale number
More than	Up to and including	
8,000,000	16,000,000	24
4,000,000	8,000,000	23
2,000,000	4,000,000	22
1,000,000	2,000,000	21
500,000	1,000,000	20
250,000	500,000	19
130,000	250,000	18
64000	130,000	17
32000	64000	16
16000	32000	15
8000	16000	14
4000	8000	13
2000	4000	12
1000	2000	11
500	1000	10
250	500	9
130	250	8
64	130	7
32	64	6

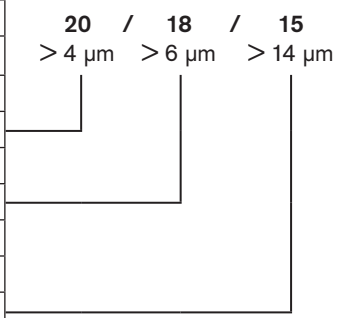

3 Selection of the hydraulic fluid

The use of hydraulic fluids based on mineral oils for Rexroth hydraulic components is based on compliance with the minimum requirements of DIN 51524.

3.1 Selection criteria for the hydraulic fluid

The specified limit values for all components employed in the hydraulic system, for example viscosity and cleanliness level, must be observed with the hydraulic fluid used, taking into account the specified operating conditions.

Hydraulic fluid suitability depends, amongst others, on the following factors:

3.1.1 Viscosity

Viscosity is a basic property of hydraulic fluids. The permissible viscosity range of complete systems needs to be determined taking account of the permissible viscosity of all components and it is to be observed for each individual component.

The viscosity at operating temperature determines the response characteristics of closed control loops, stability and damping of systems, the efficiency factor and the degree of wear.

We recommend that the optimum operating viscosity range of each component be kept within the permissible temperature range. This usually requires either cooling or heating, or both. The permissible viscosity range and the necessary cleanliness level can be found in the product data sheet for the component concerned.

If the viscosity of a hydraulic fluid used is above the permitted operating viscosity, this will result in increased hydraulic-mechanical losses. In return, there will be lower internal leakage losses. If the pressure level is lower, lubrication gaps may not be filled up, which can lead to increased wear. For hydraulic pumps, the permitted suction pressure may not be reached, which may lead to cavitation damage.

If the viscosity of a hydraulic fluid is below the permitted operating viscosity, increased leakage, wear, susceptibility to contamination and a shorter component life cycle will result.

3.1.2 Viscosity-temperature behavior

For hydraulic fluids, the viscosity temperature behavior (V-T behavior) is of particular importance. Viscosity is characterized in that it drops when the temperature increases and rises when the temperature drops; see Fig. 1 "Viscosity temperature chart for HL, HLP, HLPD (VI 100)". The interrelation between viscosity and temperature is described by the viscosity index (VI).

The viscosity temperature diagram in Fig. 1 is extrapolated in the < 40 °C range. This idealized diagram is for reference purposes only. Measured values can be obtained from your lubricant manufacturer and are to be preferred for design purposes.

Fig. 1: Viscosity-temperature chart for HL, HLP, HLPD (VI 100, double logarithmic representation)

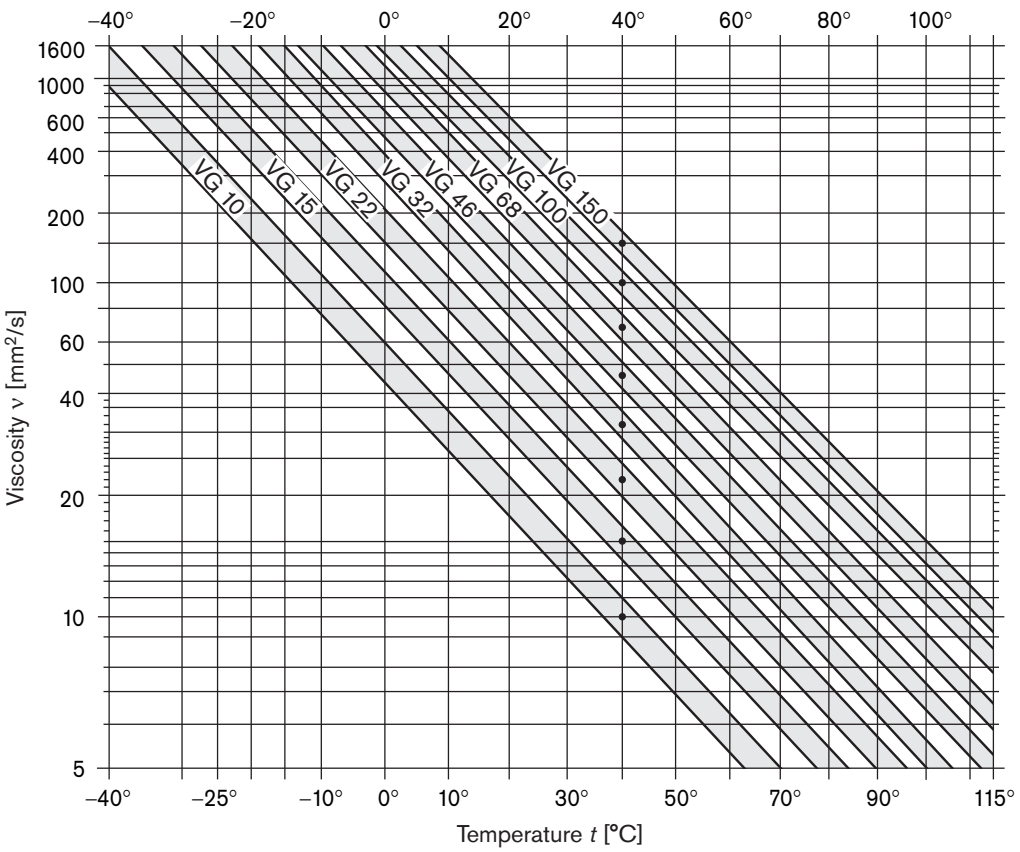

3.1.3 Wear protection capability

Wear protection capability describes the property of hydraulic fluids to prevent or minimize wear within the components. The wear protection capability is described in DIN 51524-2,-3 via test procedures "FZG gear test rig" (ISO 14635-1) and "Mechanical test in the vane pump" (ISO 20763). From ISO VG 32 DIN 51524-2,-3 prescribes a rating of at least 10 (FZG test). At present, the FZG test cannot be applied to viscosity classes < ISO VG 32.

3.1.4 Material compatibility

The hydraulic fluid must not negatively affect the materials used in the components. Compatibility with coatings, seals, hoses, metals and plastics is to be observed in particular. The fluid classifications specified in the respective component data sheets are tested by the manufacturer with regard to material compatibility. Parts and components not supplied by us are to be checked by the user.

Table 2: Known material incompatibilities

Classification	Incompatible with:
HLxx classifications	with EPDM seals
Zinc- and ash/free hydraulic fluids	with bronze-filled PTFE seals

3.1.5 Aging resistance

The way a hydraulic fluid ages depends on the thermal, chemical and mechanical stress to which it is subjected. Aging resistance can be greatly influenced by the chemical composition of the hydraulic fluids.

High fluid temperatures (e.g. over 80 °C) result in a approximate halving of the fluid service life for every 10 °C temperature increase and should therefore by avoided. The halving of the fluid service life results from the application of the Arrhenius equation (see Glossary).

Table 3: Reference values for temperature-dependent aging of the hydraulic fluid

Reservoir temperature	Fluid life cycle
80 °C	100 %
90 °C	50 %
100 °C	25 %

Hydraulic fluids based on mineral oils and related hydrocarbons are tested with 20% water additive during testing of aging resistance according to ISO 4263-1.

The calculated fluid service life is derived from the results of tests in which the long-term characteristics are simulated in a short period of time by applying more arduous conditions (condensed testing). This calculated fluid service life is not to be equated to the fluid service life in real-life applications.

Table 3 is a practical indicator for hydraulic fluids with water content < 0.1%, cf. chapter 4.10. "Water".

3.1.6 Air separation ability (ASA)

The air separation ability (ASA) describes the property of a hydraulic fluid to separate undissolved air. Hydraulic fluids contain approx. 7 to 13 percent by volume of dissolved air (with atmospheric pressure and 50 °C). Hydraulic fluids always contain dissolved air. During operation, dissolved air may be transformed into undissolved air, leading to cavitation damages. Fluid classification, fluid product, reservoir size and design must be coordinated to take into account the dwell time and ASA value of the hydraulic fluid. The air separation capacity depends on the viscosity, temperature, basic fluid and aging.
It cannot be improved by additives.

According to DIN 51524 for instance, an ASA value ≤ 10 minutes is required for viscosity class ISO VG 46, 6 minutes are typical, lower values are preferable.

3.1.7 Demulsifying ability and water solubility

The capacity of a hydraulic fluid to separate water at a defined temperature is known as the demulsifying ability. ISO 6614 defines the demulsifying properties of hydraulic fluids.

For larger systems with permanent monitoring, a demulsifying fluid with good water separation capability (WSC) is recommended. The water can be drained from the bottom of the reservoir. In smaller systems (e.g. in mobile machines), whose fluid is less closely monitored and where water contamination into the hydraulic fluid, for instance through air condensation, cannot be ruled out completely, an HLPD fluid is recommended.

The demulsifying ability up to ISO-VG 100 is given at 54 °C, and at 82 °C for fluids with higher viscosity.

Water emulsifying HLPD hydraulic fluids have no, or a very poor, demulsifying ability.

3.1.8 Filterability

Filterability describes the ability of a hydraulic fluid to pass through a filter, removing solid contaminants. The hydraulic fluids used require a good filterability, not just when new, but also during the whole of their service life. Depending on the basic fluid used and the additives (VI enhancers) there are great differences here.

The filterability is a basic prerequisite for cleanliness, servicing and filtration of hydraulic fluids. Filterability is tested with the new hydraulic fluid and after the addition of 0.2 % water. The underlying standard (ISO 13357-1/-2) stipulates that filterability must have no negative effects on the filters or the hydraulic fluid, see chapter 4 "Hydraulic fluids in operation".

3.1.9 Corrosion protection

Hydraulic fluids should not just prevent corrosion formation on steel components, they must also be compatible with non-ferrous metals and alloys. Corrosion protection tests on different metals and metal alloys are described in DIN 51524. Hydraulic fluids that are not compatible with the materials listed above must not be used, even if they are compliant with ISO 51524.

Rexroth components are usually tested with HLP hydraulic fluids or corrosion protection oils based on mineral oils before they are delivered.

3.1.10 Additivation

The properties described above can be modified with the help of suitable additives. A general distinction is made for fluids between heavy metal-free and heavy metal-containing (generally zinc) additive systems. Both additive systems are most often incompatible with each other. The mixing of these fluids must be avoided even if the mixing ratio is very low. See chapter 4, "Hydraulic fluids in operation".

Increasing additivation generally leads to deteriorated air separation ability (ASA) and water separation capability (WSC) of the hydraulic fluid. According to the present state of knowledge, all hydraulic fluids described in this document, independently of the actual additivation, can be filtered using all filter materials with all known filtration ratings ≥ 1 µm without filtering out effective additives at the same time.

Bosch Rexroth does not prescribe any specific additive system.

3.2 Classification and fields of application

Table 4: Classification and fields of application

Classification	Features	Typical field of application	Notes
HL fluids according to DIN 51524-1 VI = 100	Hydraulic fluids predominantly only with additives for oxidation and corrosion protection, but no specific additives for wear protection in case of mixed friction	HL fluids can be used in hydraulic systems that do not pose any requirements as to wear protection.	HL fluids may be used only for components whose product data sheet specifically allows HL fluids. For components which have not been approved according to the product data sheet, please consult your Bosch Rexroth sales partner. Hydraulic fluids that only comply with the requirements of classes HL and HR in accordance with ISO 11158 without proving that DIN 51524-1 is also met may be used only with written approval of Bosch Rexroth AG. Observe restrictions as to pressure, rotation speed etc.
HLP fluids according to DIN 51524-2 VI = 100	Hydraulic fluid with corrosion, oxidation and verified wear protection additives	HLP fluids are suitable for most fields of application and components provided the temperature and viscosity provisions are observed.	For information on approved components, please refer to the respective product data sheet. For components which have not been approved according to the product data sheet, please consult your Bosch Rexroth sales partner. For the viscosity classes VG10, VG15 and VG22, DIN 51524 defines no requirements as to wear protection (DIN 51354 part 2 and DIN 51389 part 2). Beyond the requirements of DIN 51524 part 2, we require the same base oil type, identical refining procedure, identical additivation and identical additivation level across all viscosity classes.

Continued on page 8

Table 4: Classification and fields of application (continued from page 7)

Classification	Features	Typical field of application	Notes
HVLP fluids according to DIN 51524-3 VI > 140	HLP hydraulic fluid with additional improved viscosity temperature behavior	HVLP fluids are used in systems operated over a wide temperature range.	For information on approved components, please refer to the respective product data sheet. For components which have not been approved according to the product data sheet, please consult your Bosch Rexroth sales partner. The same notes and restrictions as defined for HLP fluids apply accordingly. The effect on Rexroth components (e.g. compatibility with material seals, wear resistance capacity) may differ when using related hydrocarbons instead of mineral oils, cf. Table 6, line 8. When using HVLP fluids, the viscosity may change on account of the shear of the long-chain VI enhancers. The viscosity index, high at the start, decreases during operation. This needs to be taken into account when selecting the hydraulic fluid. The only value at present that can be used to assess viscosity changes in operation is the result of the test in accordance with DIN 51350 part 6. Please note that there are practical applications that create a much higher shear load on such fluids than can be achieved by this test. Up to VI < 160, we recommend a maximum permitted viscosity drop of 15 %, viscosity at 100 °C. The viscosity limits given by Bosch Rexroth for its components are to be observed for all operating conditions, even after the hydraulic fluids have sheared. HVLP fluids should be used only if required by the temperature ranges of the application.
HLPD fluids according to DIN 51524-2, HVLPD fluids in accordance with DIN 51524-3	HLP and HVLP hydraulic fluid with additional detergent and or dispersant additives	HLPD and HVLPD fluids are used in systems where deposits as well as solid or liquid contamination need to be kept temporarily suspended	For information on approved components, please refer to the respective product data sheet. For components which have not been approved according to the product data sheet, please consult your Bosch Rexroth sales partner. Some of these fluids are able to absorb significant quantities of water (> 0.1 %). This may have negative implications for the wear protection and the aging properties of the fluid. The wetting ability of these fluids varies largely depending on the product. Therefore it is not correct to say that they are generally all very well able to prevent stick-slip. In individual cases where higher water contamination is to be expected (such as in steelworks or under humid conditions), the use of HLPD/HVLPD fluids cannot be recommended as the emulsified water does not settle in the reservoir but is evaporated in heavily loaded positions. For such cases, we recommend using HLP hydraulic fluids with particularly good demulsifying ability. The water collected at the reservoir bottom is to be drained regularly. If HLPD/HVLPD fluids are used, contamination does not settle. It rather remains suspended and needs to be filtered out or removed by appropriate draining systems. For this reason, the filter area must be increased. HLPD/HVLPD fluids may contain additives that in the long run are incompatible with plastics, elastomers and non-ferrous metals. Furthermore, these additives may lead to the premature clogging of hydraulic filters. Therefore, test the filterability and the selection of the filter material in consultation with the filter manufacturer.

4 Hydraulic fluids in operation

4.1 General

The properties of hydraulic fluids can change continually during storage and operation.

Please note that the fluid standard DIN 51524 merely describes minimum requirements for hydraulic fluids in new condition at the time of filling into the bins. The operator of a hydraulic system must ensure that the hydraulic fluid remains in a utilizable condition throughout its entire period of use.

Deviations from the characteristic values are to be clarified with the lubricant manufacturer, the test labs or Bosch Rexroth.

Please note the following aspects in operation.

4.2 Storage and handling

Hydraulic fluids must be stored correctly in accordance with the instructions of the lubricant manufacturer. Avoid exposing the containers to lengthy periods of direct heat. Containers are to be stored in such a way that the risk of any foreign liquid or solid matter (e.g. water, foreign fluids or dust) ingression into the inside of the container can be ruled out. After taking hydraulic fluids from the containers, these are immediately to be properly resealed.

Recommendation:

- Store containers in a dry, roofed place
- Store barrels on their sides
- Clean reservoir systems and machine reservoirs regularly

4.3 Filling of new systems

Usually, the cleanliness levels of the hydraulic fluids as delivered do not meet the requirements of our components. Hydraulic fluids must be filtered using an appropriate filter system to minimize solid particle contamination and water in the system.

As early as possible during test operation, new systems should be filled with the selected hydraulic fluid so as to reduce the risk of accidentally mixing the fluids (see chapter 4.5 "Mixing and compatibility of different hydraulic fluids"). Changing the hydraulic medium at a later point represents significant additional costs (see following chapter).

4.4 Hydraulic fluid changeover

Changeovers, in particular between hydraulic fluids with heavy metal-free and heavy metal-containing (generally zinc) additives, frequently lead to malfunctions, see chapter 3.1.10 "Additivation".

In the case of changeovers of the fluid in hydraulic systems, it is important to ensure compatibility of the new hydraulic fluid with the remainder of the previous hydraulic fluid. We recommend obtaining a written performance guarantee from the manufacturer or supplier of the new hydraulic fluid. The quantity of old fluid remaining should be minimized. Mixing hydraulic fluids should be avoided, see following chapter.

For information on changing over hydraulic fluids with different classifications please refer to VDMA 24314, VDMA 24569 and ISO 15380 appendix A.

Bosch Rexroth will not accept liability for any damage to its components resulting from inadequate hydraulic fluid changeovers!

4.5 Mixing and compatibility of different hydraulic fluids

If hydraulic fluids from different manufacturers or different types from the same manufacturer are mixed, gelling, silting and deposits may occur. These, in turn, may cause foaming, impaired air separation ability, malfunctions and damage to the hydraulic system.

If the fluid contains more than 2 % of another fluid then it is considered to be a mixture. Exceptions apply for water, see chapter 4.10 "Water".

Mixing with other hydraulic fluids is not generally permitted. This also includes hydraulic fluids with the same classification and from the market overview RE 90220-01. If individual lubricant manufacturers advertise miscibility and/or compatibility, this is entirely the responsibility of the lubricant manufacturer.

Bosch Rexroth customarily tests all components with mineral oil HLP before they are delivered.

Note: With connectible accessory units and mobile filtering systems, there is a considerable risk of non-permitted mixing of the hydraulic fluids!

Rexroth will not accept liability for any damage to its components resulting from mixing hydraulic fluids!

4.6 Re-additivation

Additives added at a later point in time such as colors, wear reducers, VI enhancers or anti-foam additives, may negatively affect the performance properties of the hydraulic fluid and the compatibility with our components and therefore are not permissible.

Rexroth will not accept liability for any damage to its components resulting from re-additivation!

4.7 Foaming behavior

Foam is created by rising air bubbles at the surface of hydraulic fluids in the reservoir. Foam that develops should collapse as quickly as possible.

Common hydraulic fluids in accordance with DIN 51524 are sufficiently inhibited against foam formation in new condition. On account of aging and adsorption onto surfaces, the defoamer concentration may decrease over time, leading to a stable foam.

Defoamers may be re-dosed only after consultation with the lubricant manufacturer and with his written approval.

Defoamers may affect the air separation ability.

4.8 Corrosion

The hydraulic fluid is to guarantee sufficient corrosion protection of components under all operating conditions, even in the event of impermissible water contamination.

During storage and operation, hydraulic fluid based on mineral oils with anti-corrosion additives protect components against water and "acidic" oil degradation products.

4.9 Air

Under atmospheric conditions, the hydraulic fluid contains dissolved air. In the negative pressure range, for instance in the suction pipe of the pump or downstream of control edges, this dissolved air may transform into undissolved air. The undissolved air content represents a risk of cavitation and of the diesel effect. This results in material erosion of components and increased hydraulic fluid aging.

With the correct measures, such as suction pipe and reservoir design, and an appropriate hydraulic fluid, air intake and separation can be positively influenced.

See also chapter 3.1.7 "Air separation ability (ASA)".

4.10 Water

Water contamination in hydraulic fluids can result from direct ingress or indirectly through condensation of water from the air due to temperature variations.

Water in the hydraulic fluid may result in wear or direct failure of hydraulic components. Furthermore, a high water content in the hydraulic fluid negatively affects aging and filterability and increases susceptibility to cavitation.

Undissolved water can be drained from the bottom of the reservoir. Dissolved water can be removed only by using appropriate measures. If the hydraulic system is used in humid conditions, preventive measures need to be taken, such as an air dehumidifier at the reservoir vent. During operation, the water content in all hydraulic fluids, determined according to the "Karl Fischer method" (see chapter 6 "Glossary") for all hydraulic fluids must constantly be kept below 0.1% (1000 ppm). To ensure a long service life of both hydraulic fluids and components, Bosch Rexroth recommends that values below 0.05% (500 ppm) are permanently maintained.

To ensure a long service life for the hydraulic fluids and the components, we recommend that values below 0.05 % (500 ppm) are permanently maintained. Detergent and or dispersant hydraulic fluids (HLPD / HVLPD) are able to absorb (and keep suspended) more water. Prior to using these hydraulic fluids, please contact the lubricant manufacturer.

4.11 Fluid servicing, fluid analysis and filtration

Air, water, operating temperature influences and solid matter contamination will change the performance characteristics of hydraulic fluids and cause them to age.

To preserve the usage properties and ensure a long service life for hydraulic fluid and components, the monitoring of the fluid condition and a filtration adapted to the application requirements (draining and degassing if required) are indispensable.

The effort is higher in the case of unfavorable usage conditions, increased stress for the hydraulic system or high expectations as to availability and service life, see chapter 2 "Solid particle contamination and cleanliness level".

When commissioning a system, please note that the required minimum cleanliness level can frequently be attained only by flushing the system. Due to severe start-up contamination, it may be possible that a fluid and/or filter replacement becomes necessary after a short operating period (< 50 operating hours).

The hydraulic fluid must be replaced in regular intervals and tested by the lubricant manufacturer or recognized, accredited test labs. **We recommend a reference analysis after commissioning.**

The minimum data to be tested for analyses are:

- Viscosity at 40 °C and 100 °C
- Neutralization number NN (acid number AN)
- Water content (Karl-Fischer method)
- Particle measurement with evaluation according to ISO 4406 or mass of solid foreign substances with evaluation to EN 12662
- Element analysis (RFA (EDX) / ICP, specify test method)
- Comparison with new product or available trend analyses
- Assessment / evaluation for further use
- Also recommended: IR spectrum

Compared to the pure unused hydraulic fluid, the changed neutralization number NN (acid number AN) indicates how many aging products are contained in the hydraulic fluid. This value must be kept as low as possible. As soon as the trend analysis notes a significant increase in the acid number, the lubricant manufacturer should be contacted.

In case of warranty, liability or guarantee claims to Bosch Rexroth, service verification and/or the results of fluid analyses are to be provided.

5 Disposal and environmental protection

Hydraulic fluids based on mineral oil and related hydrocarbons are hazardous for the environment. They are subject to a special disposal obligation.

The respective lubricant manufacturers provide specifications on environmentally acceptable handling and storage. Please ensure that spilt or splashed fluids are absorbed with appropriate adsorbents or by a technique that prevents it contaminating water courses, the ground or sewerage systems.

It is also not permitted to mix fluids when disposing of hydraulic fluids. Regulations governing the handing of used oils stipulate that used oils are not to mixed with other products, e.g. substances containing halogen. Non-compliance will increase disposal costs. Comply with the national legal provisions concerning the disposal of the corresponding hydraulic fluid. Comply with the local safety data sheet of the lubricant manufacturer for the country concerned.

6 Other hydraulic fluids based on mineral oil and related hydrocarbons

Table 6: Other hydraulic fluids based on mineral oils and related hydrocarbons

Serial number	Hydraulic fluids	Features / Typical field of application / Notes
1	Hydraulic fluids with classification HL, HM, HV according to ISO 11158	– Can be used without confirmation provided they are listed in the respective product data sheet and are compliant with DIN 51524. Conformity with DIN 51524 must be verified in the technical data sheet of the fluid concerned. For classification see Table 4: "Hydraulic fluid classification". – Fluids **only** classified in accordance with ISO 11158 may be used only with prior written approval of Bosch Rexroth AG.
2	Hydraulic fluids with classification HH, HR, HS, HG according to ISO 11158	– May not be used.
3	Hydraulic fluids with classification HL, HLP, HLPD, HVLP, HVLPD to DIN 51502	– DIN 51502 merely describes how fluids are classified / designated on a national level. – It contains no information on minimum requirements for hydraulic fluids. – Hydraulic fluids standardized according to DIN 51502 can be used without confirmation provided they are listed in the respective product data sheet and are compliant with DIN 51524. Conformity with DIN 51524 must be verified in the technical data sheet of the fluid concerned. For classification see Table 4: "Hydraulic fluid classification".
4	Hydraulic fluids with classification HH, HL, HM, HR, HV, HS, HG according to ISO 6743-4	– ISO 6743-4 merely describes how fluids are classified / designated on an international level. It contains no information on minimum requirements for hydraulic fluids. – Hydraulic fluids standardized according to ISO 6743 -4 can be used without confirmation provided they are listed in the respective product data sheet and are compliant with DIN 51524. Conformity with DIN 51524 must be verified in the technical data sheet of the fluid concerned. For classification see table 4: "Classification and fields of application".
5	Lubricants and regulator fluids for turbines to DIN 51515-1 and -2	– Turbine oils can be used after confirmation and with limited performance data. – They usually offer lower wear protection than mineral oil HLP. Classification of turbine oils to DIN 51515-1 comparable to HL, turbine oils to DIN 51515-2 comparable to HLP. – Particular attention must be paid to material compatibility!
6	Lube oils C, CL, CLP in accordance with DIN 51517	– Lube oils in acc. with DIN 51517 can be used after confirmation and with limited performance data. They are mostly higher-viscosity fluids with low wear protection. Classification: CL similar to HL fluids and CLP similar to HLP fluids. – Particular attention must be paid to material compatibility, specifically with non-ferrous metals!
7	Fluids to be used in pharmaceutical and foodstuff industries, in acc. with FDA / USDA / NSF H1	– There are medical white oils and synthetic hydrocarbons (PAO). – Can only be used after consultation and approval for use in the specific application, even if they are compliant with DIN 51524. – May be used only with FKM seals. – Other fluids used in pharmaceutical and foodstuff industries may be used only after confirmation. – Attention is to be paid to material compatibility in accordance with the applicable food law. **Caution!** Fluids used in pharmaceutical and foodstuff industries should not be confused with environmentally acceptable fluids!

Continued on page 13

Table 6: Other hydraulic fluids based on mineral oils and related hydrocarbons
(continued from page 12)

Serial number	Hydraulic fluids	Features / Typical field of application / Notes
8	Hydraulic fluids of classes HVLP and HVLPD based on related hydrocarbons	– Can only be used after consultation and approval for use in the specific application, even if they are compliant with DIN 51524. – Lower pour point than HLP – Other wetting (polarity)
9	Automatic Transmission Fluids (ATF)	– ATF are operating fluids for automatic gearboxes in vehicles and machines. In special cases, ATFs are also used for certain synchronous gearboxes and hydraulic systems comprising gearboxes. – To be used only after confirmation! – Some of these fluids have poor air separation abilities and modified wear properties. – Check material compatibility and filterability!
10	Multi-purpose oil (MFO) – Industry	– Multi-purpose oils (industry) combine at least two requirements for a fluid, for instance metal machining and hydraulics. – To be used only after confirmation! – Please pay particular attention to air separation ability, modified wear properties and the reduced material life cycle. – Check material compatibility and filterability!
11	Multi-purpose oils (MFO) – Mobil UTTO, STOU	– Multi-purpose oils combine requirements for wet brakes, gearboxes, motor oil (STOU only) and hydraulics. – Fluids of the types: – UTTO (= universal tractor transmission oil) and – STOU (= Super Tractor super tractor universal oil) – To be used only after confirmation! – Please pay particular attention to shear stability, air separation ability and modified wear properties. – Check material compatibility and filterability!
12	Single-grade engine oils 10W, 20W, 30W	– To be used only after confirmation! – Please pay particular attention to the air separation ability and filtering ability.
13	Multi-grade engine oils 0Wx-30Wx	– To be used only after confirmation! – Please pay particular attention to air separation ability, changes in wear protection capability, viscosity changes during operation, material compatibility, dispersant and detergent properties and filterability. **Caution!** Multi-grade engine oils have been adapted to specific requirements in combustion engines and are suitable for use in hydraulic systems only to a limited extent.
14	Motor vehicle transmission oils	– Motor vehicle transmission oil can be used after confirmation and with limited performance data. – Pay particular attention to wear protection, material compatibility, specifically with non-ferrous metals, as well as viscosity!
15	Diesel, test diesel in acc. with DIN 4113	– Diesel / test diesel has poorer wear protection capabilities and a very low viscosity (< 3 mm^2/s). – May be used only with FKM seals – Please note their low flash point! – To be used only after confirmation and with limited performance data!

Continued on page 14

Table 6: Other hydraulic fluids based on mineral oils and related hydrocarbons
(continued from page 13)

Serial number	Hydraulic fluids	Features / Typical field of application / Notes
16	Hydraulic fluids for roller processes	– Hydraulic fluids for roller processes have lower wear protection capabilities than mineral oil HLP and a lower viscosity – Please note their low flash point! – Hydraulic fluids for roller processes with limited performance data can be used only after confirmation.
17	Fluids for power steering, hydro-pneumatic suspension, active chassis etc.	– Can only be used after consultation and approval for use in the specific application, even if they are compliant with DIN 51524. – Please note the low viscosity! – In most cases they have poor water separation capability – Check the material compatibility!

7 Glossary

Additivation
Additives are chemical substances added to the basic fluids to achieve or improve specific properties.

Aging
Hydraulic fluids age due to oxidation (see chapter 3.1.5 "Aging resistance"). Liquid and solid contamination acts as a catalyzer for aging, meaning that it needs to be minimized as far as possible by careful filtration.

API classification
Classification of basic fluids by the **A**merican **P**etroleum **I**nstitute (API) – the largest association representing the US oil and gas industry.

Arrhenius equation
The quantitative relation between reaction rate and temperature is described by an exponential function, the Arrhenius equation. This function is usually visualized within the typical temperature range of the hydraulic system. For a practical example, see chapter 3.1.5 "Aging resistance".

Related hydrocarbons
Related hydrocarbons are hydrocarbon compounds that are not classified as API class 1, 2 or 5.

Basic fluids
In general, a hydraulic fluid is made up of a basic fluid, or base oil, and chemical substances, the so-called additives. The proportion of basic fluid is generally greater than 90%.

Demulsifying
Ability of a fluid to separate water contamination quickly; achieved with careful selection of base oil and additives.

Detergent
Ability of certain additives to emulsify part of the water contamination in the oil or to hold it in suspension until it has evaporated with increasing temperature. Larger water quantities, in contrast (above approx. 2 %), are separated immediately.

Dispersant
Ability of certain additives to keep insoluble liquid and solid contamination in suspension in the fluid.

Diesel effect
If hydraulic fluid that contains air bubbles is compressed quickly, the bubbles are heated to such a degree that a self-ignition of the air-gas mix may occur. The resultant temperature increase may lead to seal damage and increased aging of the hydraulic fluid.

Hydraulic fluids based on mineral oils
Hydraulic fluids based on mineral oils are made from petroleum (crude oil).

ICP (atomic emission spectroscopy)
The ICP procedure can be used to determine various wear metals, contamination types and additives. Practically all elements in the periodic system can be detected with this method.

Karl Fischer method
Method to determine the water content in fluids. Indirect coulometric determination procedure in accordance with DIN EN ISO 12937 in connection with DIN 51777-2. Only the combination of both standards will assure adequately accurate measured values.

Cavitation
Cavitation is the creation of cavities in fluids due to pressure reduction below the saturated vapour pressure and subsequent implosion when the pressure increases. When the cavities implode, extremely high acceleration, temperatures and pressure may occur temporarily, which may damage the component surfaces.

Neutralization number (NN)
The neutralization number (NN) or acid number (AN) specifies the amount of caustic potash required to neutralize the acid contained in one gram of fluid.

Pour point
The lowest temperature at which the fluid still just flows when cooled down under set conditions. The pour point is specified in the lubricant manufacturers' technical data sheets as a reference value for achieving this flow limit.

RFA (wavelength dispersive x-ray fluorescence analysis)
Is a procedure to determine nearly all elements in liquid and solid samples with nearly any composition. This analysis method is suitable for examining additives and contamination, delivering fast results.

Shearing/shear loss
Shearing of molecule chains during operation can change the viscosity of hydraulic fluids with long chain VI enhancers. The initially high viscosity index drops. This needs to be taken into account when selecting the hydraulic fluid.

The only value at present that can be used to assess viscosity changes in operation is the result of the test in accordance with DIN 51350 part -6. Please note that there are practical applications that create a much higher shear load on such hydraulic fluids than can be achieved by this test.

Stick-slip effect (sliding)
Interaction between a resilient mass system involving friction (such as cylinder + oil column + load) and the pressure increase at very low sliding speeds. The static friction of the system is a decisive value here. The lower it is, the lower the speed that can still be maintained without sticking. Depending on the tribologic system, the stick-slip effect may lead to vibrations generated and sometimes also to significant noise emission. In many cases, the effect can be attenuated by replacing the lubricant.

Viscosity
Viscosity is the measure of the internal friction of a fluid to flow. It is defined as the property of a substance to flow under tension. Viscosity is the most important characteristic for describing the load-bearing capacity of a hydraulic fluid.

Kinematic viscosity is the ratio of the dynamic viscosity and the density of the fluid; the unit is mm^2/s. Hydraulic fluids are classified by their kinematic viscosity into ISO viscosity classes. The reference temperature for this is 40 °C.

Viscosity index (VI)
Refers to the viscosity temperature behavior of a fluid.
The lower the change of viscosity in relation the temperature, the higher the VI.

Environmentally acceptable hydraulic fluids

RE 90221/05.12 **1**/14
Replaces: 05.10

Application notes and requirements for Rexroth hydraulic components

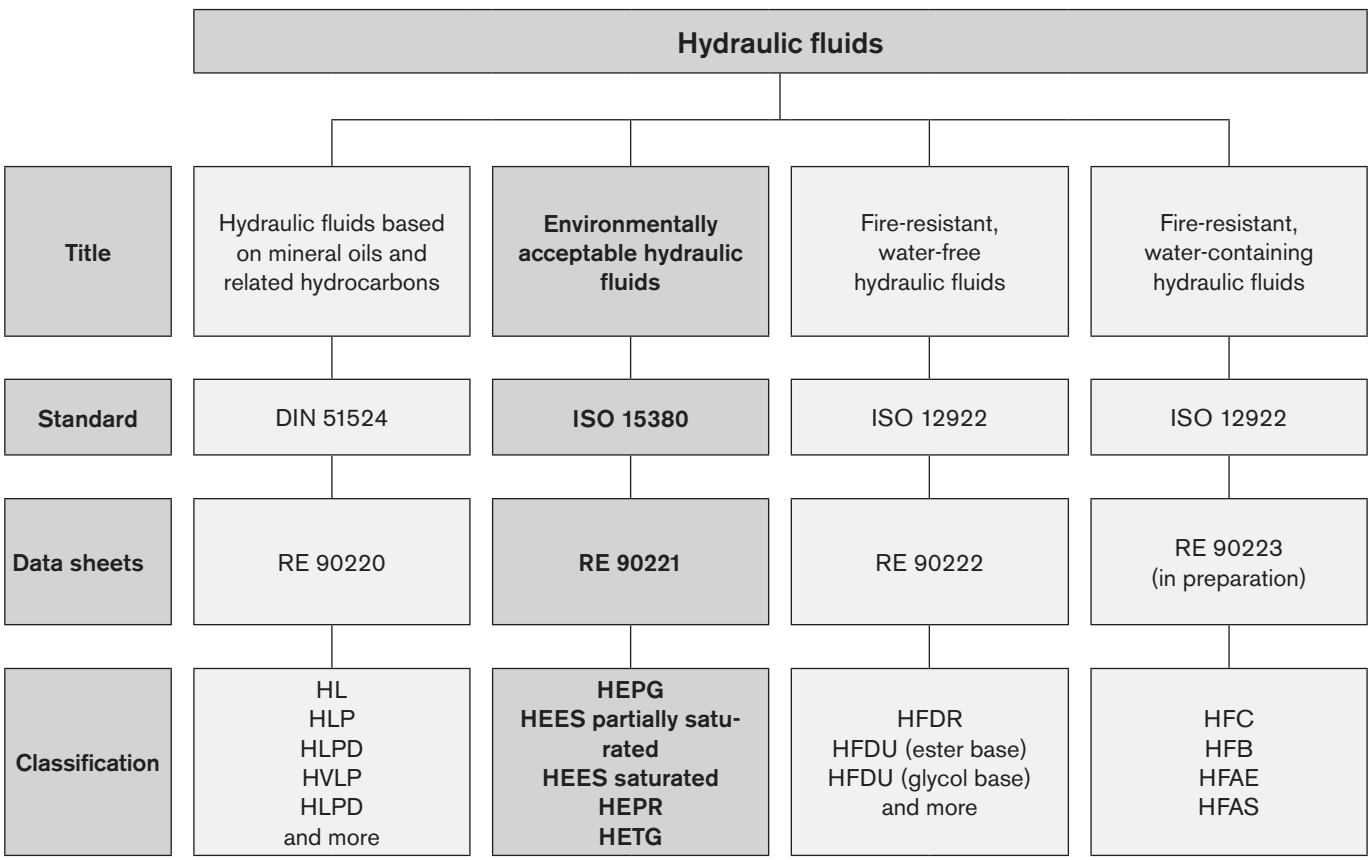

Contents

1 Basic information 3

1.1 General instructions 3

1.2 Environmental compatibility 3

1.3 Scope 3

1.4 Safety instructions 3

2 Solid particle contamination and cleanliness levels 4

3 Selection of the hydraulic fluid 5

3.1 Selection criteria for the hydraulic fluid 5

3.1.1 Viscosity 5

3.1.2 Viscosity-temperature behavior 5

3.1.3 Wear protection capability 6

3.1.4 Material compatibility 6

3.1.5 Aging resistance 6

3.1.6 Biological degradation 6

3.1.7 Air separation ability (ASA) 7

3.1.8 Demulsifying ability and water solubility 7

3.1.9 Filterability 7

3.1.10 Corrosion protection 7

3.1.11 Additivation 7

3.2 Classification and fields of application 8

4 Hydraulic fluids in operation 10

4.1 General 10

4.2 Storage and handling 10

4.3 Filling of new systems 10

4.4 Hydraulic fluid changeover 10

4.5 Mixing and compatibility of different hydraulic fluids 10

4.6 Re-additivation 10

4.7 Foaming behavior 10

4.8 Corrosion 11

4.9 Air 11

4.10 Water 11

4.11 Fluid servicing, fluid analysis and filtration 11

5 Disposal and environmental protection 12

6 Glossary 13

1 Basic information

1.1 General instructions

The hydraulic fluid is the common element in any hydraulic component and must be selected very carefully. Quality and cleanliness of the hydraulic fluid are decisive factors for the operational reliability, efficiency and service life of a system.

Hydraulic fluids must conform, be selected and used in accordance with the generally acknowledged rules of technology and safety provisions. Reference is made to the country-specific standards and directives (in Germany the directive of the Employer's Liability Insurance Association BGR 137).

This data sheet includes recommendations and regulations concerning the selection, operation and disposal of environmentally compatible hydraulic fluids in the application of Rexroth hydraulic components.

The individual selection of hydraulic fluid or the choice of classification are the responsibility of the operator.

It is the responsibility of the user to ensure that appropriate measures are taken for safety and health protection and to ensure compliance with statutory regulations. The recommendations of the lubricant manufacturer and the specifications given in the safety data sheet are to be observed when using hydraulic fluid.

This data sheet does not absolve the operator from verifying the conformity and suitability of the respective hydraulic fluid for his system. He is to ensure that the selected fluid meets the minimum requirements of the relevant fluid standard during the whole of the period of use.

Other regulations and legal provisions may also apply. The operator is responsible for their observance, e.g. EU directive 2004/35/EG, 2005/360/EG and their national implementation. In Germany the Water Resources Act (WHG) is also to be observed.

We recommend that you maintain constant, close contact with lubricant manufacturers to support you in the selection, maintenance, care and analyses.

When disposing of used hydraulic fluids, apply the same care as during use.

Environmentally acceptable hydraulic fluids have been used successfully for many years. In some countries, the use of environmentally acceptable hydraulic fluids is already prescribed in ecologically sensitive areas (e.g. forestry, locks, weirs).

Environmentally acceptable hydraulic fluids may only be used in the pharmaceutical and food industry subject to required certification to FDA/USDA/NSF **H1**.

1.2 Environmental compatibility

There is no unambiguous legal definition for environmentally acceptable hydraulic fluids as different testing procedures can be applied for biological degradation and toxicity.

According to ISO 15380 the definition of "environmentally acceptable" is as follows: Humans, animals, plants, air and soil must not be endangered. With regard to hydraulic fluids in an unused condition in the bin this mainly means:

- biological degradation at least 60 % (according to ISO 14593 or ISO 9439)
- acute fish toxicity at least 100 mg/l (according to ISO 7346-2)
- acute daphnia toxicity at least 100 mg/l (according to ISO 5341)
- acute bacteria toxicity at least 100 mg/l (according to ISO 8192)

The same amount of care should be taken when handling environmentally acceptable hydraulic fluids as for mineral oils, leakage from the hydraulic system should be avoided. Environmentally acceptable hydraulic fluids are designed so that in the event of accidents and leakage,less permanent environmental damage is caused than by mineral oils, see also chapter 5 "Disposal and environmental protection".

In comparison to mineral oil HLP/HVLP , the biological degradation of environmentally acceptable hydraulic fluids may change fluid aging, see chapter 3.1.5 "Aging resistance", 3.1.6. "Biological degradation" and 4 "Hydraulic fluids in operation".

1.3 Scope

This data sheet must be applied when using environmentally acceptable hydraulic fluids with Rexroth hydraulic components. The specifications of this data sheet may be further restricted by the specification given in the data sheets for the individual components.

The use of the individual environmentally acceptable hydraulic fluids in accordance with the intended purpose can be found in the safety data sheets or other product description documents of the lubricant manufacturers. In addition, each use is to be individually considered.

Rexroth hydraulic components may only be operated with environmentally acceptable hydraulic fluids according to ISO 15380 if specified in the respective component data sheet or if a Rexroth approval for use is furnished.

The manufacturers of hydraulic systems must adjust their systems and operating instructions to the environmentally acceptable hydraulic fluids.

Notes:
In the market overview RE 90221-01, environmentally acceptable hydraulic fluids based on mineral oil are described which, according to the information of the lubricant manufacturer, feature the respective parameters of the current requirements standard ISO 15380 and other parameters which are of relevance for suitability in connection with Rexroth components.

These specifications are not checked or monitored by Bosch Rexroth. The list in the market overview does not therefore represent a recommendation on the part of Rexroth or approval of the respective hydraulic fluid for use with Rexroth components and does not release the operator from his responsibility regarding selection of the hydraulic fluid.

Bosch Rexroth will accept no liability for its components for any damage resulting from failure to comply with the notes below.

1.4 Safety instructions

Hydraulic fluids can constitute a risk for persons and the environment. These risks are described in the hydraulic fluid safety data sheets. The operator is to ensure that a current safety data sheet for the hydraulic fluid used is available and that the measures stipulated therein are complied with.

2 Solid particle contamination and cleanliness levels

Solid particle contamination is the major reason for faults occurring in hydraulic systems. It may lead to a number of effects in the hydraulic system. Firstly, single large solid particles may lead directly to a system malfunction, and secondly small particles cause continuous elevated wear.

For mineral oils, the cleanliness level of environmentally acceptable hydraulic fluids is given as a three-digit numerical code in accordance with ISO 4406. This numerical code denotes the number of particles present in a hydraulic fluid for a defined quantity. Moreover, foreign solid matter is not to exceed a mass of 50 mg/kg (gravimetric examination according to ISO 4405).

In general, compliance with a minimum cleanliness level of 20/18/15 in accordance with ISO 4406 or better is to be maintained in operation. Special servo valves demand improved cleanliness levels of at least 18/16/13. A reduction in cleanliness level by one level means half of the quantity of particles and thus greater cleanliness. Lower numbers in cleanliness levels should always be striven for and extend the service life of hydraulic components. The component with the highest cleanliness requirements determines the required cleanliness of the overall system. Please also observe the specifications in table 1: "Cleanliness levels according to ISO 4406" and in the respective data sheets of the various hydraulic components.

Hydraulic fluids frequently fail to meet these cleanliness requirements on delivery. Careful filtering is therefore required during operation and in particular, during filling in order to ensure the required cleanliness levels. Your lubricant manufacturer can tell you the cleanliness level of hydraulic fluids as delivered. To maintain the required cleanliness level over the operating period, you must use a reservoir breather filter. If the environment is humid, take appropriate measures, such as a breather filter with air drying or permanent off-line water separation.

Note: the specifications of the lubricant manufacturer relating to cleanliness levels are based on the time at which the container concerned is filled and not on the conditions during transport and storage.

Further information about contamination with solid matter and cleanliness levels can be found in brochure RE 08016.

Table 1: Cleanliness levels according to ISO 4406

Particles per 100 ml		Scale number
More than	Up to and including	
8,000,000	16,000,000	24
4,000,000	8,000,000	23
2,000,000	4,000,000	22
1,000,000	2,000,000	21
500,000	1,000,000	20
250,000	500,000	19
130,000	250,000	18
64000	130,000	17
32000	64000	16
16000	32000	15
8000	16000	14
4000	8000	13
2000	4000	12
1000	2000	11
500	1000	10
250	500	9
130	250	8
64	130	7
32	64	6

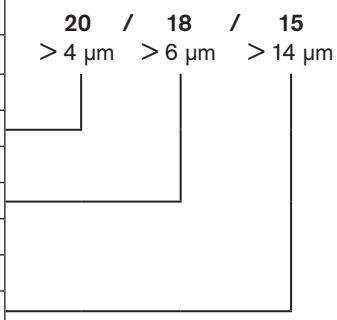

3 Selection of the hydraulic fluid

Environmentally acceptable hydraulic fluids for Bosch Rexroth hydraulic components are assessed on the basis of their fulfillment of the minimum requirements of ISO 15380.

3.1 Selection criteria for the hydraulic fluid

The specified limit values for all components employed in the hydraulic system, for example viscosity and cleanliness level, must be observed with the hydraulic fluid used, taking into account the specified operating conditions.

Hydraulic fluid suitability depends, amongst others, on the following factors:

3.1.1 Viscosity

Viscosity is a basic property of hydraulic fluids. The permissible viscosity range of complete systems needs to be determined taking account of the permissible viscosity of all components and it is to be observed for each individual component.

The viscosity at operating temperature determines the response characteristics of closed control loops, stability and damping of systems, the efficiency factor and the degree of wear.

We recommend that the optimum operating viscosity range of each component be kept within the permissible temperature range. This usually requires either cooling or heating, or both. The permissible viscosity range and the necessary cleanliness level can be found in the product data sheet for the component concerned.

If the viscosity of a hydraulic fluid used is above the permitted operating viscosity, this will result in increased hydraulic-mechanical losses. In return, there will be lower internal leakage losses. If the pressure level is lower, lubrication gaps may not be filled up, which can lead to increased wear. For hydraulic pumps, the permitted suction pressure may not be reached, which may lead to cavitation damage.

If the viscosity of a hydraulic fluid is below the permitted operating viscosity, increased leakage, wear, susceptibility to contamination and a shorter life cycle will result.

Please ensure that the permissible temperature and viscosity limits are observed for the respective components. This usually requires either cooling or heating, or both.

3.1.2 Viscosity-temperature behavior

For hydraulic fluids, the viscosity temperature behavior (V-T behavior) is of particular importance. Viscosity is characterized in that it drops when the temperature increases and rises when the temperature drops. The interrelation between viscosity and temperature is described by the viscosity index (VI).

If exposed to the cold for several days, viscosity may rise significantly (HETG and HEES). After heating, the characteristic values as specified on the data sheet are restored. Please ask your lubricant manufacturer for the " Flow capacity after 7 days at low temperature" (ASTM D 2532) of fluid classifications HETG and partially saturated HEES.

All known environmentally acceptable hydraulic fluids have better viscosity temperature behavior than mineral oil HLP and generally feature greater shear stability than HVLP mineral oils. This should be taken into consideration when selecting hydraulic fluid for the required temperature range. A lower viscosity level can frequently be used to save any drive power during a cold start and avoid viscosity being too low at higher temperatures. The required viscosity and temperature limits in the product data sheets are to be observed in all operating conditions.

Depending on the basic fluid types/classes, VI indices can be achieved of 140–220, see Fig. 1: "Examples: V-T diagrams in comparison to HLP (reference values)" and Table 4: "Classification and fields of application of environmentally acceptable hydraulic fluids".

Fig. 1: Examples V-T diagrams in comparison to HLP (reference values, double-logarithmic representation)

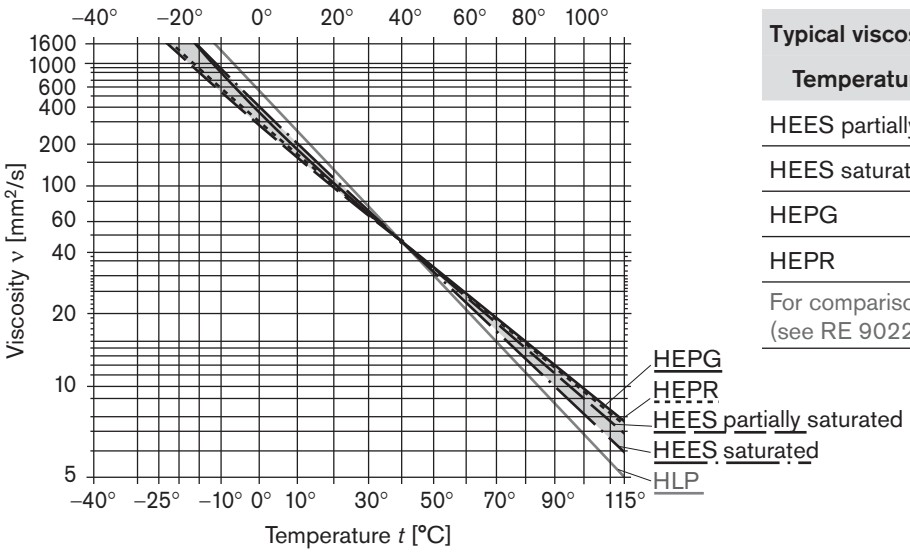

Typical viscosity data [mm²/s]			
Temperature	**–20 °C**	**40 °C**	**100 °C**
HEES partially saturated	1250	46	9
HEES saturated	2500	46	8
HEPG	2500	46	10
HEPR	1400	46	10
For comparison HLP (see RE 90220)	4500	46	7

Detailed V-T diagrams may be obtained from your lubricant manufacturer for their specific products.

3.1.3 Wear protection capability

Wear protection capability describes the property of hydraulic fluids to prevent or minimize wear within the components. The wear protection capability is described in ISO 15380 via test procedures"FZG gear test rig" (ISO 14635-1) and "Mechanical test in the vane pump" (ISO 20763). From ISO VG 32, ISO 15380 prescribes a rating of at least 10 (FZG test). At present, the FZG test cannot be applied to viscosity classes < ISO VG 32. The wear protection capability of environmentally acceptable hydraulic fluids in relation to the two test procedures is comparable to that of mineral oil HLP/HVLP.

3.1.4 Material compatibility

The hydraulic fluid must not negatively affect the materials used in the components. Compatibility with coatings, seals, hoses, metals and plastics is to be observed in particular. The fluid classifications specified in the respective component data sheets are tested by the manufacturer with regard to material compatibility. Parts and components not supplied by us are to be checked by the user.

Table 2: Known material incompatibilities

Classification	Incompatible with:
HE... general	One-component color coatings, lead, galvanized zinc coatings, some non-ferrous metals, seals made of NBR. In some cases, the latter show major increases in volume when impermissibly aged hydraulic fluids come into contact with the material. NBR is only permitted by prior consent, please observe the customary seal and tube replacement intervals. Do not use any hydrolysis/susceptible polyurethane qualities. **Note** Please check seals and coatings of control cabinets, outer coatings of hydraulic components and accessories (connectors, cables, control cabinets) for resistance to vapors issuing from hydraulic fluids.
HETG/HEES	Zinc, some non-ferrous alloys with zinc
HEPG	Steel/aluminum tribocontacts, paper filters, polymethylmethacrylate (PMMA), NBR **Note** Check plastics for resistance

The material incompatibilities mentioned here do not automatically result in function problems. However the elements of the materials are found in the hydraulic fluids after use. The biological degradation of hydraulic fluids is negatively influenced.

3.1.5 Aging resistance

The way an environmentally acceptable hydraulic fluids ages depends on the thermal, chemical and mechanical stress to which it is subjected. The influence of water, air, temperature and contamination may be significantly greater than for mineral oils HLP/HVLP. Aging resistance can be greatly influenced by the chemical composition of the hydraulic fluids .

High fluid temperatures (e.g. over 80 °C) result in a approximate halving of the fluid service life for every 10 °C temperature increase and should therefore by avoided. The halving of the fluid service life results from the application of the Arrhenius equation (see Glossary).

Table 3: Reference values for temperature-dependent aging of the hydraulic fluid

Reservoir temperature	Fluid life cycle
80 °C	100 %
90 °C	50 %
100 °C	25 %

A modified aging test (without adding water) is prescribed for fluid classifications HETG and HEES. Hydraulic fluids with HEPG and HEPR classification are subjected to the identical test procedure as mineral oils (with 20 % water added). The calculated fluid service life is derived from the results of tests in which the long-term characteristics are simulated in a short period of time by applying more arduous conditions (condensed testing). This calculated fluid service life is not to be equated to the fluid service life in real-life applications.

Table 3 is a practical indicator for hydraulic fluids with water content < 0.1%, cf. chapter 4.10. "Water".

3.1.6 Biological degradation

Environmentally acceptable hydraulic fluids are ones which degrade biologically much faster than mineral oils. Biological degradation is a biochemical transformation effected by micro-organisms resulting in mineralization. For environmentally acceptable hydraulic fluids that make reference to ISO 15380, biological degradation according to ISO 14593 or ISO 9439 must be verified. 60% minimum degradation is defined as limit value. Proof of biological degradation is furnished for the new, unmixed, ready-formulated hydraulic fluids. Aged or mixed hydraulic fluids are less able to degrade biologically. Biological degradation outside the defined test procedure is subject to a variety of natural influences. The key factors are temperature, humidity, contamination, fluid concentration, type and quantity of micro-organisms. Environmentally acceptable hydraulic fluids require no extended maintenance in comparison to mineral oils, please observe chapter 4 "Hydraulic fluids in operation".

3.1.7 Air separation ability (ASA)

The air separation ability (ASA) describes the property of a hydraulic fluid to separate undissolved air. Hydraulic fluids always contain dissolved air. During operation, dissolved air may be transformed into undissolved air, leading to cavitation damages. Fluid classification, fluid product, reservoir size and design must be coordinated to take into account the dwell time and ASA value of the hydraulic fluid. The air separation capacity depends on the viscosity, temperature, basic fluid and aging. It cannot be improved by additives.

According to ISO 15380, for instance, an ASA value ≤ 10 minutes is required for viscosity class ISO VG 46, 6 minutes are typical, lower values are preferable.

3.1.8 Demulsifying ability and water solubility

The capacity of a hydraulic fluid to separate water at a defined temperature is known as the demulsifying ability. ISO 6614 defines the demulsifying properties of hydraulic fluids.

Fluids classified HETG, HEES and HEPR separate from water. HETG and HEES hydraulic fluids have a different water separation ability to mineral oil HLP/HVLP. At 20 °C, in comparison to mineral oil HLP/HVLP, a multiple (> factor 3) of water can separate in the hydraulic fluid. Water solubility is also more temperature-dependent than for mineral oils. With regard to water solubility, HEPR hydraulic fluids behave like HVLP hydraulic fluids (see RE 90220). In the majority of cases, HEPG-classified fluids HEPG dissolve water completely , see chapter "4.10 Water".

3.1.9 Filterability

Filterability describes the ability of a hydraulic fluid to pass through a filter, removing solid contaminants. The hydraulic fluids used require a good filterability, not just when new, but also during the whole of their service life. Depending on the different basic fluids (glycols, saturated and partially saturated ester oils, hydrocrack oils, polyalpha olefins, triglycerides) and additives (VI enhancers), there are great differences here.

The filterability is a basic prerequisite for cleanliness, servicing and filtration of hydraulic fluids. Rexroth therefore requires the same degree of filterability of environmentally acceptable hydraulic fluids as for mineral oils HLP/HVLP to DIN 51524. As ISO 15380 does not comment on the filterability of hydraulic fluids, filterability comparable to that of mineral oils HLP/HVLP must be requested of lubricant manufacturers.

Filterability is tested with the new hydraulic fluid and after the addition of 0.2 % water. The underlying standard (ISO 13357-1/-2) stipulates that filterability must have no negative effects on the filters or the hydraulic fluid, see chapter 4 "Hydraulic fluids in operation".

3.1.10 Corrosion protection

Hydraulic fluids should not just prevent corrosion formation on steel components, they must also be compatible with non-ferrous metals and alloys. Corrosion protection tests on different metals and metal alloys are described in ISO 15380. Hydraulic fluids that are not compatible with the materials listed above must not be used, even if they are compliant with ISO 15380.

Rexroth components are usually tested with HLP hydraulic fluids or corrosion protection oils based on mineral oils before they are delivered.

3.1.11 Additivation

The properties described above can be modified with the help of suitable additives. Environmentally acceptable hydraulic fluids should never contain heavy metals. According to the present state of knowledge, all hydraulic fluids, regardless of additivation, can be filtered with all customary filter materials in all known filtration ratings (≥ 0.8 µm), without filtering out effective additives at the same time.

Bosch Rexroth does not prescribe any specific additive system.

3.2 Classification and fields of application

Table 4: Classification and fields of application

Classification	Features	Typical field of application	Notes
HEPG according to ISO 15380 Density at 15 °C: typically > 0.97 kg/dm³ VI: typical > 170	Basic fluid, glycols	Systems on exposed water courses (locks, weirs, dredgers)	For information on approved components, please refer to the respective product data sheet. For components which have not been approved according to the product data sheet, please consult your Bosch Rexroth sales partner. – Very good viscosity/temperature characteristics, shear stability – Resistant to aging – Incompatible with mineral oil (exceptions must be confirmed by the lubricant manufacturer) – Can be water-soluble – Can be mixed with water – Very good wear protection properties – A higher implementation temperature with the same viscosity in comparison to mineral oil is to be expected – Due to the higher density in comparison to HLP, lower suction pressures are to be anticipated for pumps. Reduce the maximum speed as required and optimize suction conditions. – Classified as insignificantly water-endangering (water hazard class WGK 1) – Prior to commissioning, contact the lubricant manufacturer, as the components are tested with mineral oil HLP/corrosion protection oil.
HEES partially saturated according to ISO 15380 Density at 15 °C: typically 0.90–0.93 kg/dm³ VI: typical > 160 Iodine count < 90	Basic fluid: Ester based on renewable raw materials, synthetic esters, mixtures of various esters, mixtures with polyalphaolefines (< 30%)	Suitable for most fields of application and components.	For information on approved components, please refer to the respective product data sheet. For components which have not been approved according to the product data sheet, please consult your Bosch Rexroth sales partner. – Preferred use of FKM seals. Please enquire for shaft seal rings and implementation temperatures under –15 °C. – In operation, a higher temperature in comparison to mineral oil HLP/HVLP is to be expected given identical design and viscosity – Limit lower (depending on viscosity class) and upper implementation temperatures (maximum 80 °C due to aging) – Good viscosity/temperature characteristics, shear stability. – Good corrosion protection, if correspondingly additivized – Mostly classed as insignificantly water-endangering (water hazard class WGK 1), in some cases as not water-endangering – High dirt dissolving capacity on fluid changeovers – In unfavorable operating conditions (high water content, high temperature), HEES on ester basis have a tendency to hydrolysis. The acidic organic decomposition products can chemically attack materials and components.

Continued on page 9

Table 4: Classification and fields of application (continued from page 8)

Classification	Features	Typical field of application	Notes
HEES saturated according to ISO 15380 Density at 15 °C: typically 0.90–0.93 kg/dm³ VI: typical 140–160 Iodine count <15	Basic fluid: Ester based on renewable raw materials, synthetic esters, mixtures of various esters, mixtures with polyalphaolefines (< 30%)	Suitable for most fields of application and components. Saturated HEES should be preferred over partially saturated HEES and HETG for components and systems exposed to high stress levels.	For information on approved components, please refer to the respective product data sheet. For components which have not been approved according to the product data sheet, please consult your Bosch Rexroth sales partner. – Preferred use of FKM seals. Please enquire for shaft seal rings and implementation temperatures under –15 °C. – In operation, a higher temperature in comparison to mineral oil HLP/HVLP is to be expected given identical design and viscosity – Good viscosity/temperature characteristics, shear stability – Good corrosion protection, if correspondingly additivized – Mostly classed as insignificantly water-endangering (water hazard class WGK 1), in the case of low viscosity classes (up to ISO VG 32) also classed as not water-endangering – High dirt dissolving capacity on fluid changeovers
HEPR according to ISO 15380 Density at 15 °C: typically 0.87 kg/dm³ VI : typical 140–160	Basic fluid: synthetically manufactured hydrocarbons (polyalpha olefins PAO) partly mixed with esters (< 30 %)	Suitable for most fields of application and components. HEPR should be preferred over partially saturated HEES and HETG for components and systems exposed to high stress levels.	For information on approved components, please refer to the respective product data sheet. For components which have not been approved according to the product data sheet, please consult your Bosch Rexroth sales partner. – Behaves similarly to HVLP- hydraulic fluids, individual products comply with ISO 15380 HEPR and DIN 51524-3 HVLP – Preferred use of FKM seals. Please enquire for shaft seal rings and implementation temperatures under –15 °C. – Good viscosity-temperature behavior – Classified as insignificantly water-endangering (water hazard class WGK 1) **Note:** Note shear stability (see chapter 4.11 "Fluid servicing, fluid analysis and filtration" and chapter 6 "Glossary")
HETG according to ISO 15380 Density at 15 °C: typically 0.90-0.93 kg/dm³ VI: typical > 200 Iodine count > 90	Basic fluid: vegetable oils and triglycerides	Not recommended for Rexroth components!	Practical requirements are frequently not fulfilled by hydraulic fluids in this classification. Use only permissible after consultation. – Viscosity is not stable over time – Very fast fluid aging, very hydrolysis-susceptible (please observe neutralization number) – Tendency to gumming, gelling and setting. – Limit the lower (depending on viscosity class) and upper implementation temperatures (see chapter 3.1.5) – Only limited material compatibility – Filterability problems at water ingress – High dirt dissolving capacity on fluid changeovers – Mostly classed as not water-endangering

4 Hydraulic fluids in operation

4.1 General

The properties of hydraulic fluids can change continually during storage and operation.

Please note that the fluid standard ISO 15380 merely describes minimum requirements for hydraulic fluids in new condition at the time of filling into the bins. The operator of a hydraulic system must ensure that the hydraulic fluid remains in a utilizable condition throughout its entire period of use.

Deviations from the characteristic values are to be clarified with the lubricant manufacturer, the test labs or Bosch Rexroth.

Bosch Rexroth will accept no liability for damage to its components within the framework of the applicable liability legislation insofar as the latter is due to non-observance of the following instructions.

Please note the following aspects in operation.

4.2 Storage and handling

Hydraulic fluids must be stored correctly in accordance with the instructions of the lubricant manufacturer. Avoid exposing the containers to lengthy periods of direct heat. Containers are to be stored in such a way that the risk of any foreign liquid or solid matter (e.g. water, foreign fluids or dust) ingression into the inside of the container can be ruled out. After taking hydraulic fluids from the containers, these are immediately to be properly resealed.

Recommendation:

– Store containers in a dry, roofed place

– Store barrels on their sides

– Clean reservoir systems and machine reservoirs regularly

4.3 Filling of new systems

Usually, the cleanliness levels of the hydraulic fluids as delivered do not meet the requirements of our components. Hydraulic fluids must be filtered using an appropriate filter system to minimize solid particle contamination and water in the system.

As early as possible during test operation, new systems should be filled with the selected hydraulic fluid so as to reduce the risk of accidentally mixing fluids (see chapter 4.5 "Mixing and compatibility of different hydraulic fluids"). Changing the hydraulic medium at a later point represents significant additional costs (see following chapter).

4.4 Hydraulic fluid changeover

In particular with the changeover from mineral oils to environmentally acceptable hydraulic fluids, but also from one environmentally acceptable hydraulic fluids to another, there may be interference (e.g. incompatibility in the form of gelling, silting, stable foam or reduced filterability or filter blockage).

In the case of changeovers of the fluid in hydraulic systems, it is important to ensure compatibility of the new hydraulic fluid with the remains of the previous hydraulic fluid. Bosch Rexroth recommends obtaining verification of compatibility from the manufacturer or supplier of the new hydraulic fluid. The quantity of old fluid remaining should be minimized. Mixing hydraulic fluids should be avoided, see following chapter.

For information on changing over hydraulic fluids with different classifications, please refer to VDMA 24314, VDMA 24569 and ISO 15380 appendix A.

Bosch Rexroth will not accept liability for any damage to its components resulting from inadequate hydraulic fluid change-overs!

4.5 Mixing and compatibility of different hydraulic fluids

If hydraulic fluids from different manufacturers or different types from the same manufacturer are mixed, gelling, silting and deposits may occur. These, in turn, may cause foaming, impaired air separation ability, malfunctions and damage to the hydraulic system.

If the fluid contains more than 2 % of another fluid then it is considered to be a mixture. Exceptions apply for water, see chapter 4.10 "Water".

Mixing with other hydraulic fluids is not generally permitted. This also includes hydraulic fluids with the same classification and from the market overview RE 90221-01. If individual lubricant manufacturers advertise miscibility and/or compatibility, this is entirely the responsibility of the lubricant manufacturer.

Bosch Rexroth customarily tests all components with mineral oil HLP before they are delivered.

Note: With connectible accessory units and mobile filtering systems, there is a considerable risk of non-permitted mixing of the hydraulic fluids!

Rexroth will not accept liability for any damage to its components resulting from mixing hydraulic fluids!

4.6 Re-additivation

Additives added at a later point in time such as colors, wear reducers, VI enhancers or anti-foam additives, may negatively affect the performance properties of the hydraulic fluid and the compatibility with our components and therefore are not permissible.

Rexroth will not accept liability for any damage to its components resulting from re-additivation!

4.7 Foaming behavior

Foam is created by rising air bubbles at the surface of hydraulic fluids in the reservoir. Foam that develops should collapse as quickly as possible.

Common hydraulic fluids in accordance with ISO 15380 are sufficiently inhibited against foam formation in new condition. On account of aging and adsorption onto surfaces, the defoamer concentration may decrease over time, leading to a stable foam.

Defoamers may be re-dosed only after consultation with the lubricant manufacturer and with his written approval.

Defoamers may affect the air separation ability.

4.8 Corrosion

The hydraulic fluid is to guarantee sufficient corrosion protection of components under all operating conditions, even in the event of impermissible water contamination.

Environmentally acceptable hydraulic fluids are tested for corrosion protection in the same way as mineral oil HLP/HVLP. When used in practice other corrosion mechanisms are revealed in detail and in individual cases, for the most part in contact with non-ferrous and white alloys.

4.9 Air

Under atmospheric conditions the hydraulic fluid contains dissolved air. In the negative pressure range, for instance in the suction pipe of the pump or downstream of control edges, this dissolved air may transform into undissolved air. The undissolved air content represents a risk of cavitation and of the diesel effect. This results in material erosion of components and increased hydraulic fluid aging.

With the correct measures, such as suction pipe and reservoir design, and an appropriate hydraulic fluid, air intake and separation can be positively influenced.

See also chapter 3.1.7 "Air separation ability (ASA)".

4.10 Water

Water contamination in hydraulic fluids can result from direct ingress or indirectly through condensation of water from the air due to temperature variations.

HEPG dissolves water completely. This means that any water that has ingressed into the system cannot be drained off in the sump of the reservoir.

In the case of hydraulic fluids classed HETG, HEES and HEPR undissolved water can be drained off from the reservoir sump, the remaining water content is however too high to ensure that the maximum permissible water limit values are observed in the long term.

Water in the hydraulic fluid can result in wear or direct failure of hydraulic components. Furthermore, a high water content in the hydraulic fluid negatively affects aging and filterability and increases susceptibility to cavitation. During operation, the water content in all hydraulic fluids, determined according to the "Karl Fischer method" (see chapter 6 "Glossary") for all environmentally acceptable hydraulic fluids must constantly be kept below 0.1% (1000 ppm). To ensure a long service life of both hydraulic fluids and components, Bosch Rexroth recommends that values below 0.05% (500 ppm) are permanently maintained.

Due to the higher water solubility (except for HEPR) in comparison to mineral oil HLP/HVLP it is urgently advised that precautions be taken when using environmentally acceptable hydraulic fluids, such as a dehumidifier on the reservoir ventilation.

Water content has an affect particularly in the case of HETG and partially saturated HEES in that it accelerates aging (hydrolysis) of the hydraulic fluid and biological degradation, see chapter 4.11 "Fluid servicing, fluid analysis and filtration".

4.11 Fluid servicing, fluid analysis and filtration

Air, water, operating temperature influences and solid matter contamination will change the performance characteristics of hydraulic fluids and cause them to age.

To preserve the usage properties and ensure a long service life for hydraulic fluid and components, the monitoring of the fluid condition and a filtration adapted to the application requirements (draining and degassing if required) are indispensable.

The effort is higher in the case of unfavorable usage conditions, increased stress for the hydraulic system or high expectations as to availability and service life, see chapter 2 "Solid particle contamination and cleanliness levels".

When commissioning a system, please note that the required minimum cleanliness level can frequently be attained only by flushing the system. Due to severe start-up contamination, it may be possible that a fluid and/or filter replacement becomes necessary after a short operating period (< 50 operating hours).

The hydraulic fluid must be replaced at regular intervals and tested by the lubricant manufacturer or recognized accredited test labs. **We recommend a reference analysis after commissioning.**

The minimum data to be tested for analyses are:

- Viscosity at 40 °C and 100 °C
- Neutralization number NN (acid number AN)
- Water content (Karl-Fischer method)
- Particle measurement with evaluation according to ISO 4406 or mass of solid foreign substances with evaluation to EN 12662
- Element analysis (RFA (EDX) / ICP, specify test method)
- Comparison with new product or available trend analyses
- Assessment / evaluation for further use
- Also recommended: IR spectrum"

Differences in the maintenance and upkeep of environmentally acceptable hydraulic fluids with the corresponding suitability characteristics (as required in market overview RE 90221-01) in comparison to mineral oil HLP/HVLP are not necessary. Attention is however drawn to the note in chapter 1.3.

After changing over hydraulic fluids it is recommended that the filters be replaced again after 50 operating hours as fluid aging products may have detached themselves ("self-cleaning effect").

Compared to the pure unused hydraulic fluid the changed neutralization number NN (acid number AN) indicates how many aging products are contained in the hydraulic fluid. This difference must be kept as low as possible. As soon as the trend analysis notes a significant increase in the values, the lubricant manufacturer should be contacted.

A higher viscosity than that of new materials indicates that the hydraulic fluid has aged. Evaluation by the test lab or lubricant manufacturers is however authoritative, whose recommendation should be urgently observed.

On systems where the possibility of water contamination cannot be completely ruled out (also condensation), it should be ensured via the hydraulic system circuit that fluid aging products are not accumulating in individual areas of the hydraulic system, but are being removed from the system in a controlled manner via the filtration system. This should be ensured via suitable hydraulic circuits (e.g. flushing circuit) or system manufacturer's operating instructions/specifications.

In case of warranty, liability or guarantee claims to Bosch Rexroth, service verification and/or the results of fluid analyses are to be provided.

5 Disposal and environmental protection

All environmentally acceptable hydraulic fluids, are like mineral oil-based hydraulic fluids, subject to special disposal obligations.

The respective lubricant manufacturers provide specifications on environmentally acceptable handling and storage. Please ensure that spilt or splashed fluids are absorbed with appropriate adsorbents or by a technique that prevents it contaminating water courses, the ground or sewerage systems.

It is also not permitted to mix fluids when disposing of hydraulic fluids. Regulations governing the handing of used oils stipulate that used oils are not to mixed with other products, e.g. substances containing halogen. Non-compliance will increase disposal costs. Comply with the national legal provisions concerning the disposal of the corresponding hydraulic fluid. Comply with the local safety data sheet of the lubricant manufacturer for the country concerned.

6 Glossary

Additivation
Additives are chemical substances added to the basic fluids to achieve or improve specific properties.

Aging
Hydraulic fluids age due to oxidation (see chapter 3.1.5 "Aging resistance"). Liquid and solid contamination acts as a catalyzer for aging, meaning that it needs to be minimized as far as possible by careful filtration. Please refer to Hydrolysis.

Arrhenius equation
The quantitative relation between reaction rate and temperature is described by an exponential function, the Arrhenius equation. This function is usually visualized within the typical temperature range of the hydraulic system. For a practical example, see chapter 3.1.5 "Aging resistance".

Basic fluids
In general, a hydraulic fluid is made up of a basic fluid, or base oil, and chemical substances, the so-called additives. The proportion of basic fluid is generally greater than 90%.

Diesel effect
If hydraulic fluid that contains air bubbles is compressed quickly, the bubbles are heated to such a degree that a self-ignition of the air-gas mix may occur. The resultant temperature increase may lead to seal damage and increased aging of the hydraulic fluid.

Saturated esters
Esters differ by the number of C atoms (chain length) and position of the bonds between the C atoms. Saturated esters do not have double/multiple bonds between C atoms and are therefore more resistant to aging than partially saturated esters.

Partially saturated esters
In contrast to saturated esters, partially saturated esters have double/multiple bonds between C atoms. Rexroth defines partially saturated esters as unsaturated bonds and mixtures of esters with unsaturated and saturated bonds. Esters with unsaturated bonds are produced on the basis of renewable raw materials.

Depending on their number and position, these unsaturated bonds between the C atoms are instable. These bonds can detach themselves and form new bonds, thus changing the properties of those liquids (an aging mechanism). One of the underlying requirements for inclusion in the market overview RE 90221-01 is an aging stability characteristic. Attention is however drawn to the note in chapter 1.3.

Hydrolysis
Hydrolysis is the splitting of a chemical bond through the reaction with water under the influence of temperature.

ICP (atomic emission spectroscopy)
The ICP procedure can be used to determine various wear metals, contamination types and additives. Practically all elements in the periodic system can be detected with this method..

Iodine count
The iodine count is a yardstick for the quantity of single and multiple unsaturated bonds between C atoms in the basic fluid. A low iodine count indicates that the hydraulic fluid contains few unsaturated bonds and is thus considerably more resistant to aging than a hydraulic fluid with a high iodine count. A statement about the position at which these multiple bonds are located and about how "stable" they are against influencing factors cannot be derived simply by stating the iodine count.

Karl Fischer method
Method to determine the water content in fluids. Indirect coulometric determination procedure in accordance with DIN EN ISO 12937 in connection with DIN 51777-2. Only the combination of both standards will assure adequately accurate measured values. For hydraulic fluids based on glycol, DIN EN ISO 12937 is to be applied in conjunction with DIN 51777-1.

Cavitation
Cavitation is the creation of cavities in fluids due to pressure reduction below the saturated vapour pressure and subsequent implosion when the pressure increases. When the cavities implode, extremely high acceleration, temperatures and pressure may occur temporarily, which may damage the component surfaces.

Neutralization number (NN)
The neutralization number (NN) or acid number (AN) specifies the amount of caustic potash required to neutralize the acid contained in one gram of fluid.

Pour point
The lowest temperature at which the fluid still just flows when cooled down under set conditions. The pour point is specified in the lubricant manufacturers' technical data sheets as a reference value for achieving this flow limit.

RFA (wavelength dispersive x-ray fluorescence analysis)
Is a procedure to determine nearly all elements in liquid and solid samples with nearly any composition. This analysis method is suitable for examining additives and contamination, delivering fast results.

Shearing/shear loss
Shearing of molecule chains during operation can change the viscosity of hydraulic fluids with long chain VI enhancers. The initially high viscosity index drops. This needs to be taken into account when selecting the hydraulic fluid.

The only value at present that can be used to assess viscosity changes in operation is the result of the test in accordance with DIN 51350 part -6. Please note that there are practical applications that create a much higher shear load on such hydraulic fluids than can be achieved by this test.

Stick-slip
Interaction between a resilient mass system involving friction (such as cylinder + oil column + load) and the pressure increase at very low sliding speeds. The static friction of the system is a decisive value here. The lower it is, the lower the speed that can still be maintained without sticking. Depending on the tribologic system, the stick-slip effect may lead to vibrations generated and sometimes also to significant noise emission. In many cases, the effect can be attenuated by replacing the lubricant.

Viscosity
Viscosity is the measure of the internal friction of a fluid to flow. It is defined as the property of a substance to flow under tension. Viscosity is the most important characteristic for describing the load-bearing capacity of a hydraulic fluid.

Kinematic viscosity is the ratio of the dynamic viscosity and the density of the fluid; the unit is mm^2/s. Hydraulic fluids are classified by their kinematic viscosity into ISO viscosity classes. The reference temperature for this is 40 °C.

Viscosity index (VI)
Refers to the viscosity temperature behavior of a fluid. The lower the change of viscosity in relation the temperature, the higher the VI.

Fire-resistant, water-free hydraulic fluids (HFDR/HFDU)

RE 90222/05.12 1/16

Application notes and requirements for Rexroth hydraulic components

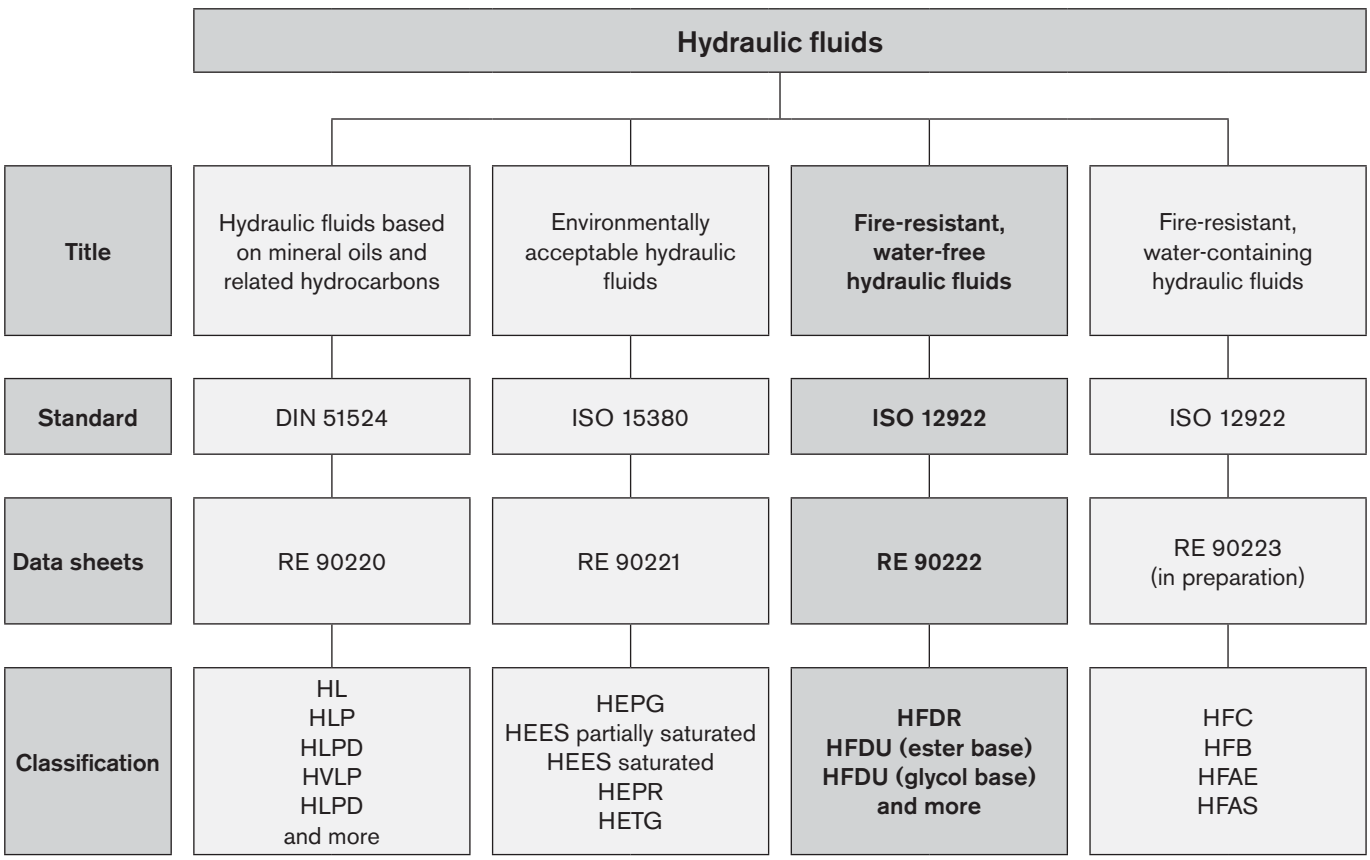

Contents

1 Basic information 3
1.1 General instructions 3
1.2 Fire resistance 3
1.3 Scope 4
1.4 Safety instructions 4
2 Solid particle contamination and cleanliness levels 5
3 Selection of the hydraulic fluid 6
3.1 Selection criteria for the hydraulic fluid 6
3.1.1 Viscosity 6
3.1.2 Viscosity-temperature behavior 7
3.1.3 Wear protection capability 7
3.1.4 Material compatibility 7
3.1.5 Aging resistance 7
3.1.6 Environmentally acceptable 8
3.1.7 Air separation ability (ASA) 8
3.1.8 Demulsifying ability and water solubility 8
3.1.9 Filterability 8
3.1.10 Corrosion protection 8
3.1.11 Additivation 8
3.2 Classification and fields of application 9
4 Hydraulic fluids in operation 11
4.1 General 11
4.2 Storage and handling 11
4.3 Filling of new systems 11
4.4 Hydraulic fluid changeover 11
4.5 Mixing and compatibility of different hydraulic fluids 11
4.6 Re-additivation 11
4.7 Foaming behavior 11
4.8 Corrosion 12
4.9 Air 12
4.10 Water 12
4.11 Fluid servicing, fluid analysis and filtration 12
5 Disposal and environmental protection 13
6 Glossary 14

1 Basic information

1.1 General instructions

The hydraulic fluid is the common element in any hydraulic component and must be selected very carefully. Quality and cleanliness of the hydraulic fluid are decisive factors for the operational reliability, efficiency and service life of a system.

Hydraulic fluids must conform, be selected and used in accordance with the generally acknowledged rules of technology and safety provisions. Reference is made to the country-specific standards and directives (in Germany the directive of the Employer's Liability Insurance Association BGR 137).

This data sheet includes recommendations and regulations concerning the selection, operation and disposal of fire-resistant, water-free hydraulic fluids in the application of Rexroth hydraulic components.

The individual selection of hydraulic fluid or the choice of classification are the responsibility of the operator.

It is the responsibility of the user to ensure that appropriate measures are taken for safety and health protection and to ensure compliance with statutory regulations. The recommendations of the lubricant manufacturer and the specifications given in the safety data sheet are to be observed when using hydraulic fluid.

This data sheet does not absolve the operator from verifying the conformity and suitability of the respective hydraulic fluid for his system. He is to ensure that the selected fluid meets the minimum requirements of the relevant hydraulic fluid standard during the whole of the period of use.

The currently valid standard for fire-resistant hydraulic fluids is the ISO 12922. In addition, other, more detailed documents, guidelines, specifications and legislation may also be valid. The operator is responsible for ensuring that such regulations are observed, for example:

- 7th Luxembourg Report: Luxembourg, April 1994, Doc. No. 4746/10/91 EN "Requirements and tests applicable to fire-resistant hydraulic fluids for hydrostatic and hydrokinetic power transmission and control"
- VDMA 24314 (1981-11): "Changing hydraulic fluids – guidelines"
- VDMA 24317 (2005-11): "Fire-resistant hydraulic fluids – minimum technical requirements"
- FM Approval Standard 6930 (2009-04): "Flammability Classification of Industrial Fluids" (only available in English)
- DIN Technical Report CEN/TR 14489 (2006-01): "Selection guidelines for protecting safety, health and the environment"

We recommend that you maintain constant, close contact with lubricant manufacturers to support you in the selection, maintenance, care and analyses.

When disposing of used hydraulic fluids, apply the same care as during use.

1.2 Fire resistance

There is no clear legal definition of fire-resistant hydraulic fluids. There are great differences regarding fire resistance. The selection is the sole responsibility of the system operator with respect to requirements (application, construction and design of the system, hottest source in the system, necessary fire protection).

Different test procedures are applied for evaluating fire resistance.

Fire resistance test procedure according to ISO 12922:

- Ignition properties of spray according to ISO 15029-1 (Spray flame persistence – hollow-cone nozzle method)
- Ignition properties of spray according to ISO 15029-2 (Stabilized flame heat release)
- Wick flame persistence of fluids according to ISO 14935 (average flame persistence)
- Determination of the flammability characteristics of fluids in contact with hot surfaces, ignition process according to ISO 20823 (ignition temperature, flame spread)

In general, fire-resistant hydraulic fluids are distinguished between **water-containing** fire-resistant and **water-free** fire-resistant hydraulic fluids. Water-containing fire-resistant hydraulic fluids are described in RE 90223.

Water-free, fire-resistant hydraulic fluid means hydraulic fluids with a water-proportion of 0.1% by volume ("Karl Fischer method", see chapter 6 "Glossary"), measured at the time of filling in the transport container.

In Europe water-free, fire-resistant hydraulic fluids are not approved for use in underground coal mining. The classification HFDU is no longer included in the VDMA 24317: 2005.

Note
In contrast to water-containing fluids, all water-free, fire-resistant hydraulic fluids have a flash point and a fire point. Specific parameters for flash point and fire point can be found in the technical and/or safety data sheet for the hydraulic fluid concerned.

Just as much care should be taken when working with fire-resistant hydraulic fluids are with other hydraulic fluids, e.g. mineral oils. A leak from the hydraulic system must be avoided. The best and most cost-effective protection against fire and explosion is to prevent leakage with meticulous service, maintenance and care of the hydraulic system.

1.3 Scope

This data sheet must be applied when using water-free, fire-resistant hydraulic fluids with Rexroth hydraulic components. The specifications of this data sheet may be further restricted by the specifications given in data sheets for the individual components concerned.

The use of the individual water-free, fire-resistant hydraulic fluids in accordance with the intended purpose can be found in the safety data sheets or other product description documents of the lubricant manufacturers. In addition, each use is to be individually considered.

Rexroth hydraulic components may only be operated with water-free, fire-resistant hydraulic fluids according to ISO 12922 if specified in the respective component data sheet or if a Rexroth approval for use is furnished.

The manufacturers of hydraulic systems must adjust their systems and operating instructions to the water-free, fire-resistant hydraulic fluids.

Bosch Rexroth will accept no liability for its components for any damage resulting from failure to comply with the notes below.

1.4 Safety instructions

Hydraulic fluids can constitute a risk for persons and the environment. These risks are described in the hydraulic fluid safety data sheets. The operator is to ensure that a current safety data sheet for the hydraulic fluid used is available and that the measures stipulated therein are complied with.

2 Solid particle contamination and cleanliness levels

Solid particle contamination is the major reason for faults occurring in hydraulic systems. It may lead to a number of effects in the hydraulic system. Firstly, single large solid particles may lead directly to a system malfunction, and secondly small particles cause continuous elevated wear.

For mineral oils, the cleanliness level of water-free, fire-resistant hydraulic fluids is given as a three-digit numerical code in accordance with ISO 4406. This numerical code denotes the number of particles present in a hydraulic fluid for a defined quantity. Moreover, foreign solid matter is not to exceed a mass of 50 mg/kg (gravimetric examination according to ISO 4405).

In general, compliance with a minimum cleanliness level of 20/18/15 in accordance with ISO 4406 or better is to be maintained in operation. Special servo valves demand improved cleanliness levels of at least 18/16/13. A reduction in cleanliness level by one level means half of the quantity of particles and thus greater cleanliness. Lower numbers in cleanliness levels should always be striven for and extend the service life of hydraulic components. The component with the highest cleanliness requirements determines the required cleanliness of the overall system. Please also observe the specifications in table 1: "Cleanliness levels according to ISO 4406" and in the respective data sheets of the various hydraulic components.

Hydraulic fluids frequently fail to meet these cleanliness requirements on delivery. Careful filtering is therefore required during operation and in particular, during filling in order to ensure the required cleanliness levels. Your lubricant manufacturer can tell you the cleanliness level of hydraulic fluids as delivered. To maintain the required cleanliness level over the operating period, you must use a reservoir breather filter. If the environment is humid, take appropriate measures, such as a breather filter with air drying or permanent off-line water separation.

Note: the specifications of the lubricant manufacturer relating to cleanliness levels are based on the time at which the container concerned is filled and not on the conditions during transport and storage.

Further information about contamination with solid matter and cleanliness levels can be found in brochure RE 08016.

Table 1: Cleanliness levels according to ISO 4406

Particles per 100 ml		Scale number
More than	Up to and including	
8,000,000	16,000,000	24
4,000,000	8,000,000	23
2,000,000	4,000,000	22
1,000,000	2,000,000	21
500,000	1,000,000	20
250,000	500,000	19
130,000	250,000	18
64000	130,000	17
32000	64000	16
16000	32000	15
8000	16000	14
4000	8000	13
2000	4000	12
1000	2000	11
500	1000	10
250	500	9
130	250	8
64	130	7
32	64	6

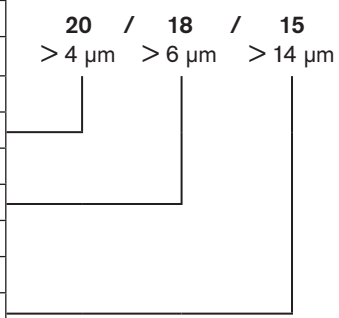

3 Selection of the hydraulic fluid

Water-free, fire-resistant hydraulic fluids for Bosch Rexroth hydraulic components are assessed on the basis of their fulfillment of the minimum requirements of ISO 12922.

3.1 Selection criteria for the hydraulic fluid

The specified limit values for all components employed in the hydraulic system, for example viscosity and cleanliness level, must be observed with the hydraulic fluid used, taking into account the specified operating conditions.

Hydraulic fluid suitability depends, amongst others, on the following factors:

3.1.1 Viscosity

Viscosity is a basic property of hydraulic fluids. The permissible viscosity range of complete systems needs to be determined taking account of the permissible viscosity of all components and it is to be observed for each individual component.

The viscosity at operating temperature determines the response characteristics of closed control loops, stability and damping of systems, the efficiency factor and the degree of wear.

We recommend that the optimum operating viscosity range of each component be kept within the permissible temperature range. This usually requires either cooling or heating, or both. The permissible viscosity range and the necessary cleanliness level can be found in the product data sheet for the component concerned.

If the viscosity of a hydraulic fluid used is above the permitted operating viscosity, this will result in increased hydraulic-mechanical losses. In return, there will be lower internal leakage losses. If the pressure level is lower, lubrication gaps may not be filled up, which can lead to increased wear. For hydraulic pumps, the permitted suction pressure may not be reached, which may lead to cavitation damage.

If the viscosity of a hydraulic fluid is below the permitted operating viscosity, increased leakage, wear, susceptibility to contamination and a shorter component life cycle will result.

Please ensure that the permissible temperature and viscosity limits are observed for the respective components. This usually requires either cooling or heating, or both.

Fig. 1: Examples V-T diagrams for water-free, fire-resistant hydraulic fluids in comparison to HLP and HFC (reference values, double-logarithmic representation)

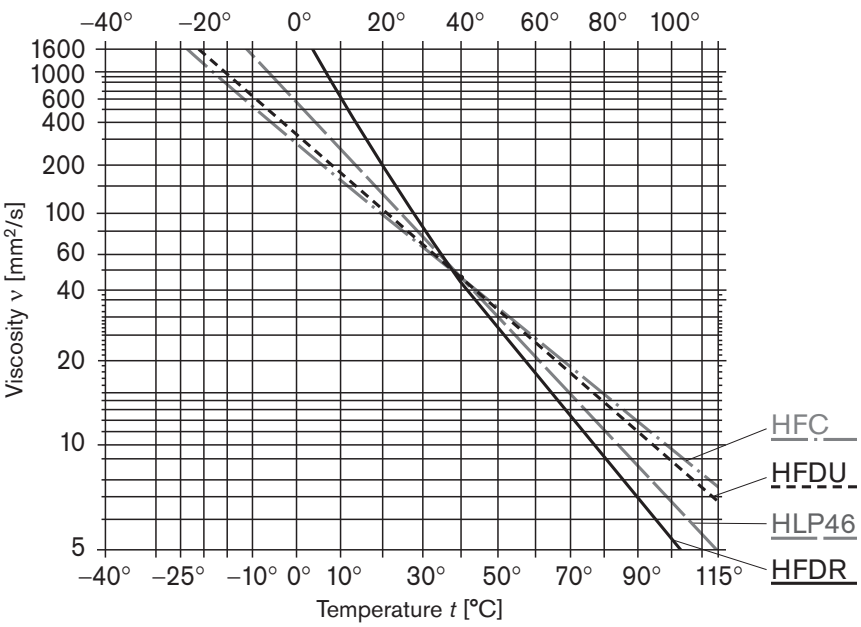

Typical viscosity data [mm²/s] at temperature	0 °C	40 °C	100 °C
HFDR	2500	43	5,3
HFDU (ester base)	330	46	9,2
HFDU (glycol base)	350	46	8,7
For comparison HLP (see RE 90220)	610	46	7
For comparison HFC (see RE 90223)	280	46	

Detailed V-T diagrams may be obtained from your lubricant manufacturer for their specific products. Descriptions of the individual classifications can be found in chapter 3.2 and in Table 4.

3.1.2 Viscosity-temperature behavior

For hydraulic fluids, the viscosity temperature behavior (V-T behavior) is of particular importance. Viscosity is characterized in that it drops when the temperature increases and rises when the temperature drops. The interrelation between viscosity and temperature is described by the viscosity index (VI).

For cold testing over a period of several days, the viscosity of ester-based HFDU can increase greatly. After heating, the characteristic values as specified on the data sheet are restored. Please ask your lubricant manufacturer for the "Flow capacity after seven days at low temperature" (ASTM D 2532) for the fluid classification ester-based HFDU .

HFDU fluid based on ester and glycol have better viscosity/temperature characteristics than mineral oil HLP (see Fig. 1). This should be taken into consideration when selecting hydraulic fluid for the required temperature range. The viscosity and temperature limits required in the product data sheets are to be observed in all operating conditions.

Note
For ambient temperatures below 0 °C, fire-resistant, **water-containing** hydraulic fluids of classification HFC are to be preferred because they observe the component-related viscosity ranges and because the have better pour points (see RE 90223).

3.1.3 Wear protection capability

Wear protection capability describes the property of hydraulic fluids to prevent or minimize wear within the components. The wear protection capability is described in ISO 12922 via test procedures"FZG gear test rig" (ISO 14635-1) and "Mechanical test in the vane pump" (ISO 20763). The wear protection capability of water-free, fire-resistant hydraulic fluids in relation to the two test procedures is comparable to that of mineral oil HLP/HVLP.

3.1.4 Material compatibility

The hydraulic fluid must not negatively affect the materials used in the components. Compatibility with coatings, seals, hoses, metals and plastics is to be observed in particular. The fluid classifications specified in the respective component data sheets are tested by the manufacturer with regard to material compatibility. Parts and components not supplied by us are to be checked by the user.

Table 2: Known material incompatibilities

Classification	Incompatible with:
HFD in general	Seals, plastics and coatings of control cabinets, outer coatings of hydraulic components and accessory components (connectors, wiring harnesses, control cabinets) are to be tested for stability. **Note:** hydraulic fluid vapors can also lead to incompatibility!
HFDR	Individual component color coating, lead, galvanic zinc-plating, in part non-ferrous metals with zinc, tin and aluminum in a tribological system. Sealing elements made of NBR. In some cases, the latter show major increases in volume when impermissibly aged hydraulic fluids come into contact with the material. Do not use any hydrolysis/susceptible polyurethane qualities.
HFDU based on ester	Single-component color coatings, lead, galvanized zinc coatings, in part non-ferrous metals with zinc, tin, seals made of NBR. In some cases, the latter show major increases in volume when impermissibly aged hydraulic fluids come into contact with the material. Do not use any hydrolysis/susceptible polyurethane qualities.
HFDU based on glycol	Single-component color coatings, steel/aluminum tribocontacts, paper filters, polymethylmethacrylate (PMMA). The compatibility of NBR is to be examined for individual case.

The material incompatibilities mentioned here do not automatically result in function problems. However the elements of the materials are found in the hydraulic fluids after use. The material incompatibilities described here may lead to accelerated aging of the hydraulic fluid and to reduced fire resistance.

3.1.5 Aging resistance

The way a water-free, fire-resistant hydraulic fluid ages depends on the thermal, chemical and mechanical stress to which it is subjected. The influence of water, air, temperature and contamination may be significantly greater than for mineral oils HLP/HVLP. Aging resistance can be greatly influenced by the chemical composition of the hydraulic fluids.

High fluid temperatures (e.g. over 80 °C) result in a approximate halving of the fluid service life for every 10 °C temperature increase and should therefore by avoided. The halving of the fluid service life results from the application of the Arrhenius equation (see Glossary).

Table 3: Reference values for temperature-dependent aging of the hydraulic fluid

Reservoir temperature	Fluid life cycle
80 °C	100 %
90 °C	50 %
100 °C	25 %

A modified aging test (ISO 4263-3 or ASTM D943 – without the addition of water) is specified for fluid classification HFDU. Fluid classification HFDR is described with a special procedure with respect to oxidation stability (EN 14832) and oxidation service life (ISO 4263-3). The calculated fluid service life is derived from the results of tests in which the long-term characteristics are simulated in a short period of time by applying more arduous conditions (condensed testing). This calculated fluid service life is not to be equated to the fluid service life in real-life applications.

Table 3 is a practical indicator for hydraulic fluids with water content < 0.1%, cf. chapter 4.10. "Water".

3.1.6 Environmentally acceptable

HFDU fluids based on ester and glycol are hydraulic fluids which may also be classified as environmentally acceptable. The main criteria for fire-resistant, water-free hydraulic fluids are the leak-free, technically problem-free use and the necessary fire resistance. Environmentally acceptable is merely a supplementary criterion. Notes on environmentally compatible hydraulic fluids can be found in RE 90221.

3.1.7 Air separation ability (ASA)

The air separation ability (ASA) describes the property of a hydraulic fluid to separate undissolved air. Hydraulic fluids always contain dissolved air. During operation, dissolved air may be transformed into undissolved air, leading to cavitation damages. Fluid classification, fluid product, reservoir size and design must be coordinated to take into account the dwell time and ASA value of the hydraulic fluid. The air separation capacity depends on the viscosity, temperature, basic fluid and aging. It cannot be improved by additives.

According to ISO 12922 for instance, an ASA value ≤ 15 minutes is required for viscosity class ISO VG 46, practical values on delivery are < 10 minutes, lower values are preferable.

3.1.8 Demulsifying ability and water solubility

The capacity of a hydraulic fluid to separate water at a defined temperature is known as the demulsifying ability. ISO 6614 defines the demulsifying properties of hydraulic fluids.

The fluid classifications HFDU based on ester and HFDR separate water, but HFD hydraulic fluids have a different water separation ability to mineral oil HLP/HVLP. At 20 °C, in comparison to mineral oil HLP/HVLP, a multiple (> factor 3) of water can separate in the hydraulic fluid. Water solubility is also more temperature-dependent than for mineral oils. The fluid classification HFDU based on glycol usually dissolves water completely, see chapter "4.10 Water".

3.1.9 Filterability

Filterability describes the ability of a hydraulic fluid to pass through a filter, removing solid contaminants. The hydraulic fluids used require a good filterability, not just when new, but also during the whole of their service life. This can differ greatly depending on the different basic fluids (glycols, esters) and additives (VI enhancers, anti-fogging additives).

The filterability is a basic prerequisite for cleanliness, servicing and filtration of hydraulic fluids. Rexroth therefore requires the same degree of filterability of water-free, fire-resistant hydraulic fluids as for mineral oils HLP/HVLP to DIN 51524.
As ISO 12922 does not comment on the filterability of hydraulic fluids, filterability comparable to that of mineral oils HLP/HVLP must be requested of lubricant manufacturers.

Filterability is tested with the new hydraulic fluid and after the addition of 0.2 % water. The underlying standard (ISO 13357-1/-2) stipulates that filterability must have no negative effects on the filters or the hydraulic fluid, see chapter 4 "Hydraulic fluids in operation".

3.1.10 Corrosion protection

Hydraulic fluids should not just prevent corrosion formation on steel components, they must also be compatible with non-ferrous metals and alloys. Corrosion protection tests on different metals and metal alloys are described in ISO 12922.

Rexroth components are usually tested with HLP hydraulic fluids or corrosion protection oils based on mineral oils before they are delivered.

3.1.11 Additivation

The properties described above can be modified with the help of suitable additives.
Bosch Rexroth does not prescribe any specific additive system.

3.2 Classification and fields of application

Table 4: Classification and fields of application

Classification	Features	Typical field of application	Notes
HFDU (glycol-based) according to ISO 12922 Density at 15 °C: typically > 0.97 kg/dm³ VI: typical > 170 The classification "HFDU" is no longer listed in the current standard sheet VDMA 24317.	Base fluid: Glycols	Mobile systems with high thermal loading	For information on approved components, please refer to the respective product data sheet. For components which have not been approved according to the product data sheet, please consult your Bosch Rexroth sales partner. – Very good viscosity/temperature characteristics, shear stability – Resistant to aging – Can be water-soluble – Can be mixed with water – Very good wear protection properties – A higher implementation temperature with the same viscosity in comparison to mineral oil is to be expected – Due to the higher density in comparison to HLP, lower suction pressures are to be anticipated for pumps. Reduce the maximum speed as required and optimize suction conditions. – Prior to commissioning, contact the lubricant manufacturer, as the components are tested with mineral oil HLP/corrosion protection oil. – Incompatible with mineral oil (exceptions must be confirmed by the lubricant manufacturer).
HFDU (ester-based) according to ISO 12922 Density at 15 °C: typically 0.90-0.93 kg/dm³ VI: typical > 160 Iodine count < 90 The classification "HFDU" is no longer listed in the current standard sheet VDMA 24317.	Base fluid: Ester based on regenerative raw materials, synthetic ester and mixtures of different esters Because of the fire resistance, HFDU hydraulic fluids based on ester are usually partially saturated esters	Suitable for most fields of application and components.	For information on approved components, please refer to the respective product data sheet. For components which have not been approved according to the product data sheet, please consult your Bosch Rexroth sales partner. – Preferred use of FKM seals. Please enquire about shaft seal rings and implementation temperatures under –15 °C. – Note shear stability (see chapter 4.11 "Fluid servicing, fluid analysis and filtration" and chapter 6 "Glossary") – Fire resistance is not stable over time – In operation, a higher temperature in comparison to mineral oil HLP/HVLP is to be expected given identical design and viscosity. Please check ATEX approvals for hydraulic components. – Limit the lower (see chapter 3.1.2) and upper implementation temperatures (see chapter 3.1.5) – Good viscosity-temperature behavior – Usually classified as insignificantly water-endangering (water hazard class WGK 1) – High dirt dissolving capacity on fluid changeovers – In unfavorable operating conditions (high water content, high temperature), HFDU on ester basis have a tendency to hydrolysis. The acidic organic decomposition products can chemically attack materials and components.

Classification	Features	Typical field of application	Notes
HFDR according to ISO 12922 Density at 15 °C: typically 1.1 kg/dm³ VI : typical 140–160	Base fluid: phosphoric acid ester	Turbine control systems	For information on approved components, please refer to the respective product data sheet. For components which have not been approved according to the product data sheet, please consult your Bosch Rexroth sales partner. – Classified as hazardous materials (for transportation and storage) – Hazardous working material – Water-endangering (Water hazard class 2 – WGK2) – Develops toxic vapors in case of fire – Preferred use of FKM, and possibly PTFE seals. Please enquire for shaft seal rings and implementation temperatures under –15 °C. – In operation, a higher temperature in comparison to mineral oil HLP/HVLP is to be expected given identical design and viscosity – Phosphoric acid esters display a tendency to hydrolysis when they come into contact with moisture. Under the influence of water/moisture, they become unstable or form highly aggressive, acidic components which could damage the hydraulic fluid and component beyond repair. – Poor viscosity/temperature characteristics – Due to the higher density in comparison to HLP, lower suction pressures are to be anticipated for pumps. Reduce the maximum speed as required and optimize suction conditions. – In unfavorable operating conditions (high water content, high temperature), HFDR have a tendency to hydrolysis. The acidic inorganic decomposition products chemically attack materials and components.
HFDU (continued)	Based on triglycerides, mineral oils or related hydrocarbons	Not recommended for Rexroth components!	Hydraulic fluids based on polyalphaolefines are not recommended on account of their poor fire resistance. This classification can usually be identified from: density < 0.89; VI < 140 to 160 Hydraulic fluids based on triglycerides are not recommended on account of their aging resistance. This classification can usually be identified from: density > 0.92; VI > 190; iodine count > 90 Consult your lubricant manufacturer or your Bosch Rexroth sales partner if the classification of a hydraulic fluid is not clear.
HFDS HFDT	Based on halogenated hydrocarbons or mixtures with halogenated hydrocarbons	Not approved for Rexroth components!	HFDS and HFDT have not been permitted to be manufactured or used since 1989 for environmental reasons.

4 Hydraulic fluids in operation

4.1 General

The properties of hydraulic fluids can change continually during storage and operation.

Please note that the fluid standard ISO 12922 merely describes minimum requirements for hydraulic fluids in new condition at the time of filling into the bins. The operator of a hydraulic system must ensure that the hydraulic fluid remains in a utilizable condition throughout its entire period of use.

Deviations from the characteristic values are to be clarified with the lubricant manufacturer, the test labs or Bosch Rexroth.

Bosch Rexroth will accept no liability for damage to its components within the framework of the applicable liability legislation insofar as the latter is due to non-observance of the following instructions.

Please note the following aspects in operation.

4.2 Storage and handling

Hydraulic fluids must be stored correctly in accordance with the instructions of the lubricant manufacturer. Avoid exposing the containers to lengthy periods of direct heat. Containers are to be stored in such a way that the risk of any foreign liquid or solid matter (e.g. water, foreign fluids or dust) ingression into the inside of the container can be ruled out. After taking hydraulic fluids from the containers, these are immediately to be properly resealed.

Recommendation:

– Store containers in a dry, roofed place

– Store barrels on their sides

– Clean reservoir systems and machine reservoirs regularly

4.3 Filling of new systems

Usually, the cleanliness levels of the hydraulic fluids as delivered do not meet the requirements of our components. Hydraulic fluids must be filtered using an appropriate filter system to minimize solid particle contamination and water in the system.

As early as possible during test operation, new systems should be filled with the selected hydraulic fluid so as to reduce the risk of accidentally mixing fluids (see chapter 4.5 "Mixing and compatibility of different hydraulic fluids"). Changing the hydraulic medium at a later point represents significant additional costs (see following chapter).

4.4 Hydraulic fluid changeover

Problems may be encountered in particular when changing over from water-containing, fire-resistant hydraulic fluid or mineral oils to water-free, fire-resistant hydraulic fluids (e.g. incompatibilities in the form of gelling, silting, stable foam, reduced filterability or filter blockage). This may also happen when changing products within the same classification.

In the case of changeovers of the fluid in hydraulic systems, it is important to ensure compatibility of the new hydraulic fluid with the remains of the previous hydraulic fluid. Bosch Rexroth recommends obtaining verification of compatibility from the manufacturer or supplier of the new hydraulic fluid. The quantity of old fluid remaining should be minimized. Mixing hydraulic fluids should be avoided, see following chapter.

Information about changing to a hydraulic fluid of a different classification can be found, for example, in VDMA 24314 and in ISO 7745. In addition, the information given in chapter 3.1.4 "Material compatibility" is also to be observed.

Bosch Rexroth will not accept liability for any damage to its components resulting from inadequate hydraulic fluid changeovers!

4.5 Mixing and compatibility of different hydraulic fluids

If hydraulic fluids from different manufacturers or different types from the same manufacturer are mixed, gelling, silting and deposits may occur. These, in turn, may cause foaming, impaired air separation ability, malfunctions and damage to the hydraulic system.

If the fluid contains more than 2 % of another fluid then it is considered to be a mixture. Exceptions apply for water, see chapter 4.10 "Water".

Mixing with other hydraulic fluids is not generally permitted. This includes hydraulic fluids with the same classification. If individual lubricant manufacturers advertise miscibility and/or compatibility, this is entirely the responsibility of the lubricant manufacturer.

Bosch Rexroth customarily tests all components with mineral oil HLP before they are delivered.

Note: With connectible accessory units and mobile filtering systems, there is a considerable risk of non-permitted mixing of the hydraulic fluids!

Rexroth will not accept liability for any damage to its components resulting from mixing hydraulic fluids!

4.6 Re-additivation

Additives added at a later point in time such as colors, wear reducers, VI enhancers or anti-foam additives, may negatively affect the performance properties of the hydraulic fluid and the compatibility with our components and therefore are not permissible.

Rexroth will not accept liability for any damage to its components resulting from re-additivation!

4.7 Foaming behavior

Foam is created by rising air bubbles at the surface of hydraulic fluids in the reservoir. Foam that develops should collapse as quickly as possible.

Common hydraulic fluids in accordance with ISO 12922 are sufficiently inhibited against foam formation in new condition. On account of aging and adsorption onto surfaces, the defoamer concentration may decrease over time, leading to a stable foam.

Defoamers may be re-dosed only after consultation with the lubricant manufacturer and with his written approval.

Defoamers may affect the air separation ability.

4.8 Corrosion

The hydraulic fluid is to guarantee sufficient corrosion protection of components under all operating conditions, even in the event of impermissible water contamination.

Water-free, fire-resistant hydraulic fluids are tested for corrosion protection in the same way as mineral oil HLP/HVLP. When used in practice other corrosion mechanisms are revealed in detail and in individual cases, for the most part in contact with non-ferrous and white alloys.

4.9 Air

Under atmospheric conditions the hydraulic fluid contains dissolved air. In the negative pressure range, for instance in the suction pipe of the pump or downstream of control edges, this dissolved air may transform into undissolved air. The undissolved air content represents a risk of cavitation and of the diesel effect. This results in material erosion of components and increased hydraulic fluid aging.

With the correct measures, such as suction pipe and reservoir design, and an appropriate hydraulic fluid, air intake and separation can be positively influenced.

See also chapter 3.1.7 "Air separation ability (ASA)".

4.10 Water

Water contamination in hydraulic fluids can result from direct ingress or indirectly through condensation of water from the air due to temperature variations.

HFDU hydraulic fluids on glycol basis are water-soluble or can be mixed with water. This means that any water that has ingressed into the system cannot be drained off in the sump of the reservoir.

In the case of HDFU hydraulic fluids on ester basis, undissolved water can be drained off from the reservoir sump, the remaining water content is however too high to ensure that the maximum permissible water limit values are observed in the long term.

With the fluid classification HFDR, the greater density of the ester means that the any water that has ingressed will be on the surface of the hydraulic fluid. This means that any water that has ingressed into the system cannot be drained off in the sump of the reservoir.

Water in the hydraulic fluid can result in wear or direct failure of hydraulic components. Furthermore, a high water content in the hydraulic fluid negatively affects aging and filterability and increases susceptibility to cavitation. During operation, the water content in all hydraulic fluids, determined according to the "Karl Fischer method" (see chapter 6 "Glossary") for all water-free, fire-resistant hydraulic fluids must constantly be kept below 0.1% (1000 ppm). To ensure a long service life of both hydraulic fluids and components, Bosch Rexroth recommends that values below 0.05% (500 ppm) are permanently maintained.

Due to the higher water solubility in comparison to mineral oil HLP/HVLP it is urgently advised that precautions be taken when using water-free, fire-resistant hydraulic fluids, such as a dehumidifier on the reservoir ventilation.

Water content has an affect particularly in the case of HEDU hydraulic fluid on ester basis and HFDR in that it accelerates aging (hydrolysis) of the hydraulic fluid and biological degradation, see chapter 4.11 "Fluid servicing, fluid analysis and filtration".

4.11 Fluid servicing, fluid analysis and filtration

Air, water, operating temperature influences and solid matter contamination will change the performance characteristics of hydraulic fluids and cause them to age.

To preserve the usage properties and ensure a long service life for hydraulic fluid and components, the monitoring of the fluid condition and a filtration adapted to the application requirements (draining and degassing if required) are indispensable.

The effort is higher in the case of unfavorable usage conditions, increased stress for the hydraulic system or high expectations as to availability and service life, see chapter 2 "Solid particle contamination and cleanliness levels".

When commissioning a system, please note that the required minimum cleanliness level can frequently be attained only by flushing the system. Due to severe start-up contamination, it may be possible that a fluid and/or filter replacement becomes necessary after a short operating period (< 50 operating hours).

The hydraulic fluid must be replaced at regular intervals and tested by the lubricant manufacturer or recognized accredited test labs. **We recommend a reference analysis after commissioning.**

The minimum data to be tested for analyses are:

- Viscosity at 40 °C and 100 °C
- Neutralization number NN (acid number AN)
- Water content (Karl-Fischer method)
- Particle measurement with evaluation according to ISO 4406 or mass of solid foreign substances with evaluation to EN 12662
- Element analysis (RFA (EDX) / ICP, specify test method)
- Comparison with new product or available trend analyses
- Assessment / evaluation for further use
- Also recommended: IR spectrum

No differences are needed in the maintenance and care of water-free, fire-resistant hydraulic fluids with the appropriate suitability parameters compared to HLP/HVLP mineral oils. Attention is however drawn to the note in chapter 1.3.

After changing over hydraulic fluids it is recommended that the filters be replaced again after 50 operating hours as fluid aging products may have detached themselves ("self-cleaning effect").

Compared to the pure unused hydraulic fluid the changed neutralization number NN (acid number AN) indicates how many aging products are contained in the hydraulic fluid. This difference must be kept as small as possible. The lubricant manufacturer should be contacted as soon as the trend analysis notes a significant increase in values.

A higher viscosity than that of new materials indicates that the hydraulic fluid has aged. Evaluation by the test lab or lubricant manufacturers is however authoritative, whose recommendation should be urgently observed.

On systems where the possibility of water contamination cannot be completely ruled out (also condensation), it should be ensured via the hydraulic system circuit that fluid aging products are not accumulating in individual areas of the hydraulic system, but are being removed from the system in a controlled manner via the filtration system. This should be ensured via suitable hydraulic circuits (e.g. flushing circuit) or system manufacturer's operating instructions/specifications.

In case of warranty, liability or guarantee claims to Bosch Rexroth, service verification and/or the results of fluid analyses are to be provided.

5 Disposal and environmental protection

All water-free, fire-resistant hydraulic fluids, are, like mineral oil-based hydraulic fluids, subject to special disposal obligations.

The respective lubricant manufacturers provide specifications on environmentally acceptable handling and storage. Please ensure that spilt or splashed fluids are absorbed with appropriate adsorbents or by a technique that prevents it contaminating water courses, the ground or sewerage systems.

It is also not permitted to mix fluids when disposing of hydraulic fluids. Regulations governing the handing of used oils stipulate that used oils are not to mixed with other products, e.g. substances containing halogen. Non-compliance will increase disposal costs. Comply with the national legal provisions concerning the disposal of the corresponding hydraulic fluid. Comply with the local safety data sheet of the lubricant manufacturer for the country concerned.

6 Glossary

Additivation
Additives are chemical substances added to the basic fluids to achieve or improve specific properties.

Aging
Hydraulic fluids age due to oxidation (see chapter 3.1.5 "Aging resistance"). Liquid and solid contamination acts as a catalyzer for aging, meaning that it needs to be minimized as far as possible by careful filtration. Please refer to Hydrolysis.

Arrhenius equation
The quantitative relation between reaction rate and temperature is described by an exponential function, the Arrhenius equation. This function is usually visualized within the typical temperature range of the hydraulic system. For a practical example, see chapter 3.1.5 "Aging resistance".

Basic fluids
In general, a hydraulic fluid is made up of a basic fluid, or base oil, and chemical substances, the so-called additives. The proportion of basic fluid is generally greater than 90%.

Diesel effect

If hydraulic fluid that contains air bubbles is compressed quickly, the bubbles are heated to such a degree that a self-ignition of the air-gas mix may occur. The resultant temperature increase may lead to seal damage and increased aging of the hydraulic fluid.

Partially saturated esters
In contrast to saturated esters, partially saturated esters have double/multiple bonds between C atoms. Rexroth defines partially saturated esters as unsaturated bonds and mixtures of esters with unsaturated and saturated bonds. Esters with unsaturated bonds are produced on the basis of renewable raw materials.

Depending on their number and position, these unsaturated bonds between the C atoms are instable. These bonds can detach themselves and form new bonds, thus changing the properties of those liquids (an aging mechanism). Attention is however drawn to the note in chapter 1.3.

Hydrolysis
Hydrolysis is the splitting of a chemical bond through the reaction with water under the influence of temperature.

ICP (atomic emission spectroscopy)
The ICP procedure can be used to determine various wear metals, contamination types and additives. Practically all elements in the periodic system can be detected with this method.

Iodine count
The iodine count is a yardstick for the quantity of single and multiple unsaturated bonds between C atoms in the basic fluid. A low iodine count indicates that the hydraulic fluid contains few unsaturated bonds and is thus considerably more resistant to aging than a hydraulic fluid with a high iodine count. A statement about the position at which these multiple bonds are located and about how "stable" they are against influencing factors cannot be derived simply by stating the iodine count.

Karl Fischer method
Method to determine the water content in fluids. Indirect coulometric determination procedure in accordance with DIN EN ISO 12937 in connection with DIN 51777-2. Only the combination of both standards will assure adequately accurate measured values. For hydraulic fluids based on glycol, DIN EN ISO 12937 is to be applied in conjunction with DIN 51777-1.

Cavitation
Cavitation is the creation of cavities in fluids due to pressure reduction below the saturated vapour pressure and subsequent implosion when the pressure increases. When the cavities implode, extremely high acceleration, temperatures and pressure may occur temporarily, which may damage the component surfaces.

Neutralization number (NN)
The neutralization number (NN) or acid number (AN) specifies the amount of caustic potash required to neutralize the acid contained in one gram of fluid.

Pour point
The lowest temperature at which the fluid still just flows when cooled down under set conditions. The pour point is specified in the lubricant manufacturers' technical data sheets as a reference value for achieving this flow limit.

RFA (wavelength dispersive x-ray fluorescence analysis)
Is a procedure to determine nearly all elements in liquid and solid samples with nearly any composition. This analysis method is suitable for examining additives and contamination, delivering fast results.

Shearing/shear loss
Shearing of molecule chains during operation can change the viscosity of hydraulic fluids with long chain VI enhancers and anti-fogging additives. The initially high viscosity index drops. This needs to be taken into account when selecting the hydraulic fluid.

The only value at present that can be used to assess viscosity changes in operation is the result of the test in accordance with DIN 51350 part -6. Please note that there are practical applications that create a much higher shear load on such hydraulic fluids than can be achieved by this test.

Viscosity
Viscosity is the measure of the internal friction of a fluid to flow. It is defined as the property of a substance to flow under tension. Viscosity is the most important characteristic for describing the load-bearing capacity of a hydraulic fluid.

Kinematic viscosity is the ratio of the dynamic viscosity and the density of the fluid; the unit is mm^2/s. Hydraulic fluids are classified by their kinematic viscosity into ISO viscosity classes. The reference temperature for this is 40 °C.

Viscosity index (VI)
Refers to the viscosity temperature behavior of a fluid. The lower the change of viscosity in relation the temperature, the higher the VI.

Fire-resistant hydraulic fluids – water-containing (HFAE, HFAS, HFB, HFC)

RE 90223
Edition: 01.2015

Application notes and requirements for Rexroth hydraulic components

	Hydraulic fluids			
Title	Hydraulic fluids based on mineral oils and related hydrocarbons	Environmentally acceptable hydraulic fluids	Fire-resistant hydraulic fluids – water-free	Fire-resistant hydraulic fluids – water-containing
Standard	DIN 51524	ISO 15380	ISO 12922	ISO 12922
Document	90220	90221	90222 90225[1)]	90223 90225[1)]
Fluid rating	90235[2)] Bosch Rexroth Fluid Rating List 90245[2)]			
Classification	HL HLP HVLP and more	HETG HEPG HEES partially saturated HEES saturated HEPR	HFDR HFDU (ester base) HFDU (glycol base) and more	HFAE HFAS HFB HFC and more

1) Valid for Bosch Rexroth axial piston units
2) Valid for Bosch Rexroth Business Unit “Mobile Applications” – pumps and motors

Contents

1	Basic information	3
1.1	General instructions	3
1.2	Fire resistance	4
1.3	Scope	4
1.4	Safety instructions	5
2	Solid particle contamination and cleanliness levels	5
3	Selection of the hydraulic fluid	6
3.1	Selection criteria for the hydraulic fluid	6
3.1.2	Viscosity temperature behavior	8
3.1.3	Wear protection capability	8
3.1.4	Material compatibility	8
3.1.5	Aging resistance	10
3.1.6	Environmental compatibility	10
3.1.7	Air separation ability (ASA)	10
3.2	Classification and fields of application	11
4	Hydraulic fluids in operation	12
4.1	General	12
4.2	Storage and handling	12
4.3	Filling of new systems	12
4.4	Hydraulic fluid changeover	12
4.5	Mixing and compatibility of different hydraulic fluids	13
4.6	Re-additivation	13
4.7	Foaming behavior	13
4.8	Corrosion protection	13
4.9	Dissolved and undissolved air	13
4.10	Fluid servicing, fluid analysis, and filtration	13
5	Disposal and environmental protection	15
6	Standardization	15
7	Glossary	15

1 Basic information

1.1 General instructions

Hydraulic fluid is the common element in any hydraulic system and must be selected very carefully. Quality and cleanliness of the hydraulic fluid are decisive factors for the operational reliability, efficiency, and life cycle of the system. Hydraulic fluids must conform, be selected and used in accordance with the generally acknowledged rules of technology and safety provisions. Reference is made to the country-specific standards and directives (in Germany the directive of the Employer's Liability Insurance Association BGR 137).
This document includes recommendations and regulations concerning the selection, operation, and disposal of water-containing, fire-resistant hydraulic fluids in the application of Rexroth hydraulic components.

The individual selection of hydraulic fluid or the choice of classification are the responsibility of the operator.

It is also the responsibility of the operator to ensure that appropriate measures are taken for safety and health protection and to ensure compliance with statutory regulations. The recommendations of the lubricant manufacturer and the specifications given in the safety data sheet are to be observed when using hydraulic fluid.

This document does not release the operator from verifying the conformity and suitability of the respective hydraulic fluid for his system. The operator of a hydraulic system must ensure that the hydraulic fluid remains fit for purpose throughout its entire period of use.
The currently valid standard for fire-resistant hydraulic fluids is ISO 12922. In addition, even more detailed documents, guidelines, specifications, and laws (the observance of which the operator shall also be responsible) may be valid. This includes, for instance:

a. 90235 - Assessment of hydraulic fluids used in Rexroth hydraulic components (pumps and motors)
b. 7th Luxembourg Report: Luxembourg, April 1994 - Doc. No. 4746/10/91 EN “Requirements and tests applicable to fire-resistant hydraulic fluids used for power transmission and control (hydrostatic and hydrokinetic)”
c. VDMA 24314 (1981-11): “Change of pressure liquids – Directives”
d. VDMA 24317 (2005-11): “Fire-resistant hydraulic fluids - Minimum technical requirements”
e. FM Approval Standard 6930 (2009-04): “Flammability Classification of Industrial Fluids” (only available in English)
f. DIN Technical Report CEN/TR 14489 (2006-01): “Selection guidelines for protecting safety, health, and the environment”
g. BGR 137 - Handling hydraulic fluids (1997-04): German trade association rules health and safety at work.
h. DIN 24320: “Fire-resistant fluids - Hydraulic fluids of categories HFAE and HFAS - Characteristics and requirements”
i. List of hydraulic fluids in the set of regulations for the mining sector (coal mining): http://www.bezregarnsberg.nrw.de/themen/s/schwerentflammbare_hydraulikfluessigkeiten/index.php
j. RAG N 762010 (2012-10): “Fire-resistant hydraulic fluids HFC-E, requirements”
k. RAG N 762011 (2012-09): “Requirements on synthetic, fire-resistant hydraulic fluids (HFA-S and synthetic emulsions)”
l. Ordinance for all mining sectors - ABBergV (1995-10): General Federal Mining Ordinance
m. Occupational Health and Safety Ordinance for Mines (GesBergV) (1991-07): Mining ordinance for the health protection of mineworkers

We recommend that you maintain constant, close contact with lubricant manufacturers to support you in the selection, maintenance, care, and analyses.
When disposing of used hydraulic fluids, apply the same care as during use.

1.2 Fire resistance

There is no clear legal definition of fire-resistant hydraulic fluids. There are great differences regarding fire resistance. Selection is the sole responsibility of the system operator with respect to requirements (application, construction and design of the system, hottest ignition source in the system, required fire protection).

The most important task in determining the fire resistance of hydraulic fluids is to find a test method that reproduces the situation occurring in a specific application. Different test methods are used to assess the fire resistance according to ISO 12922:

- Spray ignition characteristics according to ISO 15029-1 (Spray flame persistence – Hollow-cone nozzle method)
- Spray ignition characteristics according to ISO 15029-2 (Stabilized flame heat release method) Flammability index (RI))
- Wick flame persistence of fluids according to ISO 14935 (average flame persistence)
- Flammability on hot surfaces according to ISO 20823 (ignition temperature, spread of flame)
  The required minimum values for the ignition temperature differ according to ISO 12922:
  HFB: 650 °C, HFC: 600 °C, HFDU: 400 °C, HFDR: 700 °C

In general, fire-resistant hydraulic fluids are distinguished between fire-resistant, **water-free**, and fire-resistant, **water-containing** hydraulic fluids. The fire-resistant, water-free hydraulic fluids are described in Document 90222.

Fire resistant, water-containing hydraulic fluids are normally understood as hydraulic fluids with a proportion greater than 35% by mass of water (according to ISO 12922).

Information

- Only fire-resistant, water-containing hydraulic fluids can currently receive approval from the mining authorities for use in coal mining below ground.
- In contrast to water-free fluids, all fire-resistant, water-containing hydraulic fluids do not have a flash point or combustion point.
- The test conditions for determining the flammability on hot surfaces vary significantly within ISO 12922 between fire-resistant, water-free and fire-resistant, water-containing hydraulic fluids (e.g. different testing temperatures).
- Just as much care should be taken when working with fire-resistant hydraulic fluids as with other hydraulic fluids, e.g. mineral oils. Leakage in the hydraulic system must be prevented. The best and most cost-effective protection against fire and explosion is to prevent leakage with meticulous servicing, and maintenance and care of the hydraulic system.
- If possible, the system should be designed such that fires and explosions cannot arise.

1.3 Scope

This document must be applied when using fire-resistant, water-containing hydraulic fluids in Bosch Rexroth hydraulic components. Please note that the specifications in this document may be further defined by the data sheets for the individual components.

The use of the individual fire-resistant, water-containing hydraulic fluids according to the intended purpose can be found in the safety data sheets or other product description documents of the lubricant manufacturers.

Rexroth hydraulic components may only be operated with fire-resistant, water-containing hydraulic fluids according to ISO 12922 if this is specified in the respective component data sheet or if a Rexroth approval for use is furnished.

The manufacturers of hydraulic systems must adjust their systems and operating instructions to the fire-resistant, water-containing hydraulic fluids.

Bosch Rexroth will accept no liability for its components for any damage resulting from failure to comply with the notes below.

1.4 Safety instructions

Hydraulic fluids can constitute a risk for persons and the environment. These risks are described in the hydraulic fluid safety data sheets. The operator is to ensure that a current safety data sheet for the hydraulic fluid used is available and that the measures stipulated therein are complied with.
See also sub-paragraphs 1.1 b., f., g., j., k., and l.

2 Solid particle contamination and cleanliness levels

Solid particle contamination is the major reason for faults occurring in hydraulic systems. It may lead to a number of effects in the hydraulic system. Firstly, single large solid particles may lead directly to a system malfunction, and secondly small particles cause continuous elevated wear.
For fire-resistant, water-containing hydraulic fluids, the cleanliness level is given as a three-digit numerical code in accordance with ISO 4406. The determination of this is made pursuant to the microscope method according to ISO 4407. The automatic method cannot be applied for fire-resistant, water-containing hydraulic fluids, since oil droplets could be counted as particles, for instance. This numerical code denotes the number of particles present in a hydraulic fluid for a defined quantity. Only particles > 5 µm and > 15 µm are counted here. The specification of the cleanliness level according to ISO 4406 thus only relates to those two particle sizes; for example: “ISO 4406: - / 18 / 15”. The type of measuring method applied must always be specified as well when the cleanliness level is being determined.
ISO 4406 is generally preferred in hydraulics.
Moreover, foreign solid matter is not to exceed a mass of 50 mg/kg (gravimetric examination according to ISO 4405).

In general, compliance with a minimum cleanliness level of 20/18/15 according to ISO 4406 or better is to be maintained during operation. Special servo valves require better cleanliness levels of at least 18/16/13. An ordinal number lower by one signifies one half of the number of particles, and thus a higher level of cleanliness. Lower numbers in cleanliness levels should always be striven for, and extend the service life of hydraulic components. The component with the highest cleanliness requirements determines the required cleanliness for the overall system. Please also note the information given in Table 1: “Cleanliness levels according to ISO 4406” and in the respective data sheets for the various hydraulic components.
As an option, SAE AS 4059 can be used instead of ISO 4406 if particles above the size of 14 µm are going to be identified. The specification of cleanliness levels using cumulative particle counts is indicated by way of a letter/numerical code, although usually the particle size with the highest code is specified.
Hydraulic fluids frequently fail to meet the cleanliness requirements on delivery (basic contamination in containers). Careful filtering is therefore required during operation and, in particular, during filling in order to ensure the required cleanliness levels in the system. Your lubricant manufacturer can tell you the cleanliness levels of hydraulic fluids as delivered. To maintain the required cleanliness level over the operating period, it is recommended that a tank breather filter be used.

Information
Note: the specifications of the lubricant manufacturer relating to cleanliness levels are based on the time at which the container concerned is filled and not on the conditions during transport and storage.
Further information about solid matter contamination and cleanliness levels can be found in the Bosch Rexroth oil cleanliness booklet R999000239.

Filter inspections and tests can be ordered at Bosch Rexroth as a service using the number R928037504 - Filter inspection - (inspection of used filter cartridges).

Table 1: Cleanliness levels according to ISO 4406 (determination according to ISO 4407)

Particles per 100 ml		Ordinal number
More than	Up to and including	
8,000,000	16,000,000	24
4,000,000	8,000,000	23
2,000,000	4,000,000	22
1,000,000	2,000,000	21
500,000	1,000,000	20
250,000	500,000	19
130,000	250,000	18
64000	130,000	17
32000	64000	16
16000	32000	15
8000	16000	14
4000	8000	13
2000	4000	12
1000	2000	11
500	1000	10
250	500	9
130	250	8
64	130	7
32	64	6

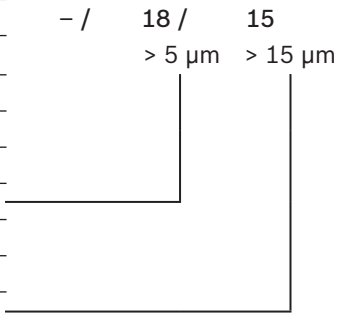

3 Selection of the hydraulic fluid

Fire-resistant, water-containing hydraulic fluids for Bosch Rexroth hydraulic components are assessed on the basis of their fulfillment of the minimum requirements according to ISO 12922.
Based on this, hydraulic fluids can be used that were assessed by Bosch Rexroth according to 90235 (fluid rating).

3.1 Selection criteria for the hydraulic fluid

The specified limit values for all components employed in the hydraulic system, for example required viscosities and cleanliness levels, need to be complied with while observing the specified operating conditions with the hydraulic fluid used. Please refer to the data sheet for the respective Rexroth hydraulic component for the permissible viscosity range, the required cleanliness levels, and the approved operating data.
Hydraulic fluid suitability depends, among other things, on the following factors:

3.1.1 Viscosity

Viscosity is a basic property of hydraulic fluids. The permissible viscosity range of complete systems needs to be determined taking account of the permissible viscosity of all components, and it is to be observed for each individual component.

The viscosity at operating temperature determines the response characteristics of closed control loops, stability and damping of systems, the efficiency factor, and the degree of wear.
We recommend that the optimum operating viscosity range of each component be kept within the permissible temperature range.
If the viscosity of a hydraulic fluid used is above the permitted operating viscosity, this will result in increased hydraulic-mechanical losses. However, internal
leakage losses will be fewer. If the pressure level is lower, lubrication gaps may not be filled up, which can lead to increased wear. For hydraulic pumps, the permitted suction pressure may not be reached, which could lead to cavitation damage.
If the viscosity of a hydraulic fluid is below the permitted operating viscosity, increased leakage, wear, susceptibility to contamination, and a shorter life cycle in the components will result.
Please ensure that the permissible temperature and viscosity limits are observed for the respective components. This usually requires either cooling or heating, or both.
The viscosity is influenced by the water content. If water loss occurs during operation owing to temperatures
> +40 °C, then the viscosity will increase firstly (mainly in

open systems). If the viscosity drops when the water content is reduced or if it remains the same, then the polymers in the water-glycol mixture are either damaged or sheared.

Fig. 1: Example ν-T-diagram HFA, HFAS concentrated, HFC compared to HFDR, HFDU (ester based) and HLP (reference values, double-logarithmic presentation)

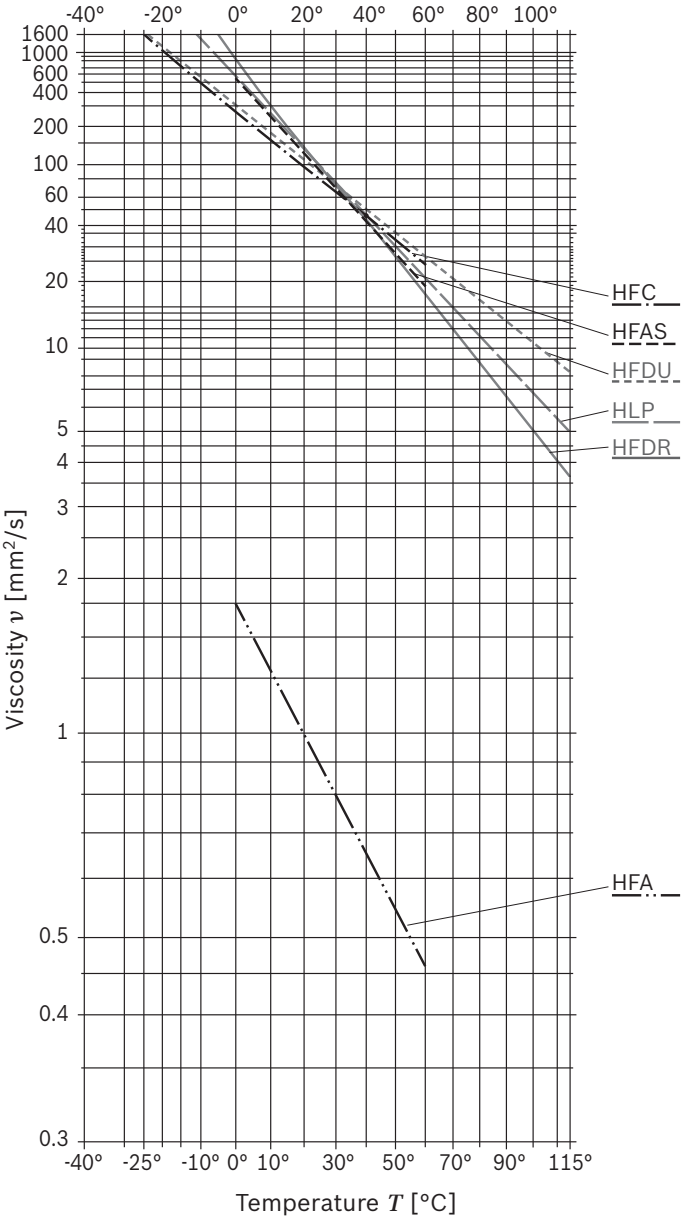

Table 2: Examples of typical viscosity data [mm²/s] in different hydraulic fluids

Temperature	-20 °C	0 °C	40 °C	60 °C	100 °C
HFA	–[1)]	1.75	0.65	0.47	–[2)]
HFAS concentrated	–[1)]	550	42	18.7	–[2)]
HFC	1183	295	46	24.3	–[2)]
compare HFDR (see 90222)	(14250)[3)]	956	43	17.1	(5)[3)]
compare HFDU (ester based) (see 90222)	1195	310	50	26.5	10.4
compare HLP (see 90220)	(4034)[3)]	547	46	20.8	(6.9)[3)]

1) Not applicable (see Pour point)
2) Not applicable (water loss in depressurized reservoir)
3) Observe permissible viscosity range for the respective hydraulic component.

3.1.2 Viscosity temperature behavior

In hydraulic fluids, it is primarily the viscosity temperature behavior (v-T-behavior) that is of particular importance.
In hydraulic fluids, the viscosity is characterized in that it drops when the temperature increases and rises when the temperature drops. The interrelation between viscosity and temperature is described by the viscosity index (VI).
HFC hydraulic fluids have a better viscosity temperature behavior than HLP mineral oil.
In HFA hydraulic fluids, the dependency of the viscosity on the temperature is negligible.
The differing viscosity temperature behavior needs to be taken into consideration when selecting hydraulic fluid for the required temperature range.
Owing to a high vapor pressure in comparison to a similar HLP mineral oil, the maximum operating temperature when working with fire-resistant, water-containing hydraulic fluids must be limited. Reservoir temperatures above +50 °C must be prevented in open systems, because they can lead to serious water loss and accelerate the aging process in the hydraulic fluid. Furthermore, in HFC hydraulic fluids, water losses that are too high can lead to both an increase in viscosity and to a reduction in the fire-resistant properties.

Information

- The minimum operating temperature for HFA hydraulic fluids is +5 °C.
- HFC hydraulic fluids respond very well at low temperatures and have a lower pour point when compared to HLP mineral oils.

3.1.3 Wear protection capability

Wear protection capability describes the property of hydraulic fluids to prevent or minimize wear within the components.
This is described in ISO 12922 for HFC hydraulic fluids using the following test methods:

- Mechanical testing in the vane pump (ISO 20763), method B (reduced temperature and working pressure when compared to HLP mineral oil)
- Testing in the four-ball apparatus (ISO 20623)
- Testing in the FZG test machine for mechanical stress in the gears (ISO 14635-1), reduced test temperature when compared with HLP mineral oil: in accordance with the 7th Luxembourg Report or ISO 12922 for HFB and HFC at 60 °C.

These test methods cannot be applied for HFA hydraulic fluids.

The test methods and test conditions for fire-resistant, water-containing hydraulic fluids are not comparable to those used for HLP/HVLP mineral oils. This is why the operating data for Rexroth hydraulic components that were optimized for HLP/HVLP mineral oils are (in part) limited. To some extent, Rexroth hydraulic components specifically developed for fire-resistant, water-containing hydraulic fluids are available without the limitation of operating data (e.g. in 92053, the A4VSO axial piston variable pump for HFC hydraulic fluids).

3.1.4 Material compatibility

The hydraulic fluid must not negatively affect the materials used in the components. Compatibility with coatings, seals, hoses, metals, and plastics is to be observed in particular. The fluid classifications specified in the respective components data sheets are tested by the manufacturer with regard to material compatibility. Parts and components not supplied by us are to be checked by the user.

The material incompatibilities mentioned here do not automatically result in function problems. However the elements of the materials are found in the hydraulic fluid after use. Material incompatibilities may, where applicable, lead to an accelerated aging process in the hydraulic fluid and to increased wear and corrosion of the components.

Table 3: Known incompatibilities of materials

Classification	Incompatible with
Water-containing HF... general	**Seals/plastics/coatings** FKM elastomers are normally not resistant, NBR elastomers are recommended. Seals, plastics, coatings (of control cabinets, too), outer coatings of hydraulic components, and accessory components (connectors, wiring harnesses, control cabinets) are to be tested for stability. Note: hydraulic fluid vapors can also lead to incompatibility! **Coatings on the inside of the reservoir** Single component lacquer (e.g. zinc dust paint) is unstable; the use of stainless steel reservoirs (rustproof steel) is recommended. **Zinc** Zinc and zinc coatings exhibit in the static immersion test only a minimal amount of change in weight. If zinc (e.g. Zn die-cast housings for filters etc.) is attacked even to a minimal extent, then voluminous reaction products are formed (e.g. zinc soaps) that may block the filters, solenoids etc. **Aluminum** Aluminum alloys are not stable in all cases (risk of corrosion with cast aluminum). Above all, it is the simpler properties that get attacked, especially if they come into contact with steel parts. The electrochemical reaction with steel (potential difference approx. 1.23 V) may cause a severe case of aluminum removal. Anodized aluminum is suitable for static loading. Aluminum wrought alloys offer improved stability. **Cadmium/magnesium** Cadmium and magnesium alloys are not compatible. **Lead** Pure lead is noticeably attacked already in the static compatibility test.
HFB	**Seals** Polyurethane (AU) not stable
HFC	**Seals** Polyurethane (AU) not stable **Tin and zinc** Tin and zinc should be avoided in systems using HFC hydraulic fluids. Residual amounts of HLP mineral oils containing zinc and oils used for corrosion protection must be avoided.

3.1.5 Aging resistance

Fire-resistant, water-containing hydraulic fluids are less subject to thermal load than HLP mineral oils, which is why they are substantially less subject to aging.
In HFAE hydraulic fluids, microbial contamination can cause undesirable aging in the hydraulic fluid. Fungal slime, cakes of fungus, and yeasts can clog filters and lines.

3.1.6 Environmental compatibility

Fire-resistant, water-containing hydraulic fluids are hydraulic fluids that can also be environmentally acceptable at the same time. The main criterion for fire-resistant, water-containing hydraulic fluids is the leak-free, technically problem-free application with the necessary fire resistance. Environmental compatibility is merely a supplementary criterion.
You can recognize the environmental compatibility in the technical data sheet for the hydraulic fluid using the reference to:

- DIN Technical Report CEN/TR 14489
- BGR 137
- 7th Luxembourg Report, Part IV “assessment of health hazards” and Part VI “assessment of environmental compatibility”
- Occupational Health and Safety Ordinance for Mines (GesBergV)

Please refer to the safety data sheet of the respective hydraulic fluids for more information on environmental compatibility.
Information on other environmentally acceptable hydraulic fluids can be found (without reference to fire resistance) in Document 90221.

3.1.7 Air separation ability (ASA)

The air separation ability (ASA) describes the property of a hydraulic fluid to separate undissolved air. Hydraulic fluids always contain dissolved air. During operation, dissolved air may be transformed into undissolved air, leading to cavitation damage.
Furthermore, the system behavior can differ due to the higher proportion of undissolved air when compared with HLP mineral oil. According to ISO 12922, a specific value for the air separation ability is not required for the HFAE and HFAS classifications.
The air separation ability for the HFC classification depends on the viscosity, the temperature, basic fluid, and aging. It cannot be improved by additives.
Fluid classification, fluid product, reservoir size and design must be coordinated to take into account the dwell time and ASA value of the hydraulic fluid.
According to ISO 12922 for instance, an ASA value of ≤ 25 minutes is required for HFC in viscosity class ISO VG 46, lower values are preferable.

3.2 Classification and fields of application

Table 4: Classification and fields of application

Classification	Features	Typical field of application	Information
HFAE according to ISO 12922 Density at 15 °C typically 1.00 kg/dm³ Normal water content ≥ 95% (m/m)	Oil-in-water emulsions Viscosity at 40 °C: max. 5 mm²/s Appearance: milky to translucent emulsion	Mine support, hydrostatic drives, hydraulic strut extension below ground	Approved for all components that allow “HFAE according to ISO 12922” in the product data sheet for hydraulic fluids. Observe limitations in the operating data for the respective components. - Water-polluting (WGK 1 to 3) - Reservoir temperature +5 °C to +50 °C - Resistance to aging, see chapter 3.1.5 - Owing to the higher density by comparison to HLP, lower intake pressures are to be expected in pumps and, where applicable, the flow must be reduced and the intake conditions optimized (higher cavitation tendency)
HFAS according to ISO 12922 Density at 15 °C typically 1.00 kg/dm³ Normal water content ≥ 95% (m/m)	Chemical solutions in water Viscosity at 40 °C: max. 5 mm²/s or thickened variants up to ISO VG 68 Appearance: transparent	Mine support, foundry technology, press hydraulics (example: hydroforming)	Approved for all components that allow “HFAS according to ISO 12922” in the product data sheet for hydraulic fluids. Observe limitations in the operating data for the respective components. - Mineral-oil free - Water-polluting (WGK 1 to 2) - Reservoir temperature +5 °C to +50 °C - Owing to the higher density by comparison to HLP, lower intake pressures are to be expected in pumps and, where applicable, the flow must be reduced and the intake conditions optimized (higher cavitation tendency)
HFB according to ISO 12922 Density at 15 °C typically 0.92 to 1.05 kg/dm³ Normal water content ≥ 40% (m/m)	Water-in-oil emulsions Viscosity classes: ISO VG 46 up to 100	Mostly in coal mining below ground, primarily in the U.K. (hydrostatic control systems and drives)	Practical requirements are frequently not fulfilled by hydraulic fluids in this classification. As a result of a high mineral oil content up to 60%, they do not meet the limit values for spray ignition characteristics (fire resistance) prescribed in Germany. Observe limitations in the operating data for the respective components. - Water-polluting (WGK 1 to 3) - Reservoir temperature +5 °C to +50 °C - Owing to the higher density by comparison to HLP mineral oil, lower intake pressures are to be expected in pumps and, where applicable, the flow must be reduced and the intake conditions optimized (higher cavitation tendency)
HFC according to ISO 12922 Density at 15 °C typically 1.07 to 1.09 kg/dm³ VI: typically > 150 Normal water content ≥ 35% (m/m)	Watery polymer solutions Viscosity classes: ISO VG 22 up to 68 Usually ISO VG 46	All application areas where water-free hydraulic fluids are not permitted due to the risk of fire. For example: The steel industry, coking plants, foundries, hardening plants, forming presses, injection molding and pressure die casting machines, mining technology (exception: salt mining)	Approved for all components that allow “HFC according to ISO 12922” in the product data sheet for hydraulic fluids. Observe limitations in the operating data for the respective components. - Categorized as non-/minimally water-polluting (NWG/WGK 1) - Reservoir temperatures -20 °C to +50 °C - Very good viscosity temperature behavior - Owing to the higher density by comparison to HLP mineral oil, lower intake pressures are to be expected in pumps and, where applicable, the flow must be reduced and the intake conditions optimized (higher cavitation tendency). - A reservoir with an inspection port above the fill level is recommended in order to remove floating residual oil.
HFC-E not standardized according to ISO 12922 Density at 15 °C typically 1.07 to 1.14 kg/dm³ VI: typically > 135 Normal water content 18 to 20% (m/m)	Watery polymer solutions Viscosity classes: ISO VG 46 up to 68 Normally ISO VG 68	Mostly in coal mining below ground, primarily in Germany	- Like HFC, but improved protection against wear and extended temperature range up to 70 °C

4 Hydraulic fluids in operation

4.1 General

The properties of hydraulic fluids can change continually during storage and operation.
Please note that the fluid standard ISO 12922 merely describes minimum requirements for hydraulic fluids in new condition at the time of filling into the delivery containers. The operator of a hydraulic system must ensure that the hydraulic fluid remains fit for purpose throughout its entire period of use.
Deviations from the characteristic values are to be clarified with the lubricant manufacturer, the test labs, or Bosch Rexroth.
Bosch Rexroth will accept no liability for damage to its components within the framework of the applicable liability legislation insofar as the latter is due to non-observance of the following instructions.
Please note the following aspects in operation.

4.2 Storage and handling

Hydraulic fluids must be stored correctly in accordance with the instructions of the lubricant manufacturer. Avoid exposing the containers to lengthy periods of direct heat.
A container is to be stored such that the risk of any foreign liquid or solid matter (e.g. water, foreign fluids, or dust) ingression into the inside of the container can be ruled out.
After taking hydraulic fluids from the containers, these are to be properly resealed immediately. HFAE and HFAS hydraulic fluids are delivered in a concentrated form.
Please observe the hardness (°dH) in order to produce the finished product, lower hardness values should be aimed at (°dH, calcium oxide CaO in ppm).
Recommendation:

- Store containers in a dry, roofed place
- Store HFA containers frost-protected
- Clean reservoir systems and machine reservoirs regularly

Please refer to the respective safety data sheet for the minimum storage duration and storage conditions.

4.3 Filling of new systems

Usually, the cleanliness levels of the hydraulic fluids as delivered do not meet the requirements of our hydraulic components at the company. When filling, hydraulic fluids must be filtered using an appropriate filter system to minimize solid particle contamination in the system.
As early as possible during test operation, new systems should be filled with the selected hydraulic fluid so as to reduce the risk of accidentally mixing the fluids (see chapter 4.5 “Mixing and compatibility of different hydraulic fluids”). Changing the hydraulic medium at a later point represents significant additional costs (see following section).

4.4 Hydraulic fluid changeover

Problems may be encountered in particular when changing over from fire-resistant, water-free hydraulic fluids or mineral oils to fire-resistant, water-containing hydraulic fluids (e.g. incompatibilities in the form of gelling, silting, stable foam, reduced filterability, or filter blockage). This may also happen when changing products within the same classification.
In the case of changeovers of the fluid in hydraulic systems, it is important to ensure compatibility and miscibility of the new hydraulic fluid with the remains of the previous hydraulic fluid from the system.
Bosch Rexroth recommends obtaining verification of compatibility and miscibility from the manufacturer or supplier of the new hydraulic fluid. The remainder quantities of the old fluid need to be minimized. Mixing hydraulic fluids should be avoided; see following section.
Information on changing over hydraulic fluids with different classifications can be found in VDMA 24314 and ISO 7745, among others. Beyond that, please observe chapter 3.1.4 “Material compatibility”.

Bosch Rexroth will not accept liability for any damage to its components resulting from inadequate hydraulic fluid changeovers!

4.5 Mixing and compatibility of different hydraulic fluids

If hydraulic fluids from different manufacturers or different types from the same manufacturer are mixed, gelling, silting, and deposits may occur. These, in turn, may cause foaming, impaired air separation ability, malfunctions, and damage to the hydraulic system.
If the fluid contains more than 2% of another fluid then it is considered to be a mixture.
Mixing with other hydraulic fluids is not generally permitted. This includes hydraulic fluids with the same classification. If individual lubricant manufacturers advertise miscibility and/or compatibility, this is entirely the responsibility of the lubricant manufacturer.
Bosch Rexroth customarily tests all components with HLP mineral oil.
Bosch Rexroth will not accept liability for any damage to its components resulting from mixing hydraulic fluids!

4.6 Re-additivation

Additives added at a later point in time such as colors, wear reducers, VI enhancers or anti-foam additives, may negatively affect the performance properties of the hydraulic fluid and the compatibility with our components, and are not approved.
Bosch Rexroth will not accept liability for any damage to its components resulting from re-additivation!

4.7 Foaming behavior

Foam is created by rising air bubbles at the surface of hydraulic fluids in the reservoir. Foam that develops should collapse as quickly as possible.
The foaming behavior of fire-resistant, water-containing hydraulic fluids is normally worse than in HLP mineral oil.

4.8 Corrosion protection

Water generally has corrosive properties.
Corrosion protection is only possible to a limited extent due to the water content in fire-resistant, water-containing hydraulic fluids, despite the available corrosion protection additives.
Materials made of steel, copper, zinc, aluminum, bronze alloys and brass alloys, as well as combinations of these materials have a higher corrosion tendency.

4.9 Dissolved and undissolved air

Under atmospheric conditions, the hydraulic fluid contains dissolved air. In the negative pressure range, for instance in the suction pipe of the pump or downstream of control edges, this dissolved air may transform into undissolved air. The undissolved air content represents a risk of cavitation. The consequence of this is material erosion on components. With the correct measures, such as suction pipe and reservoir design, and an appropriate hydraulic fluid, air intake and separation can be positively influenced.
See also section 3.1.7 “Air separation ability (ASA)”.

4.10 Fluid servicing, fluid analysis, and filtration

To preserve the usage properties and ensure a long service life for hydraulic fluid and components, both the monitoring of the fluid condition and a filtration adapted to the application requirements are indispensable.
The application of hydraulic system filters with a filtration rate > 200 for 10µm particles (β10(c) > 200 according to ISO 16889) is not recommended for fire-resistant, water-containing hydraulic fluids, since finer filters can break down the chemical composition of the fluid. If finer filters are required despite that, then the fluid manufacturer needs to be consulted before they are used.
β10(c) > 75 according to ISO 16889 is recommended.
The effort is higher in the case of unfavorable usage conditions, increased stress on the hydraulic system or high expectations as to availability and service life, see chapter 2 “Solid particle contamination and cleanliness levels”.
When commissioning a system, please note that the required minimum cleanliness level can frequently be attained only by flushing the system. Due to severe start-up contamination, it may be possible that a fluid and/or filter replacement becomes necessary after a short operating period (< 50 operating hours).
The hydraulic fluid must be replaced at regular intervals and tested by the lubricant manufacturer or recognized, accredited test labs. A reference inspection is recommended both for the unused hydraulic fluid (casks) and after commissioning.

Minimum information in analyses (recommended)

Property or test conditions	Test method	HFAE	HFAS	HFB	HFC
Appearance		●	●	●	●
Water content	HFAE, HFB: ISO 3733 HFAS: ISO 6296; HFC: DIN 51777-1	●	●	●	●
Density at 15 °C	ISO 3675, DIN 51757 incl. supplementary sheet 1	–	–	●	●
pH value at 20 °C	ISO 20843	●	●	–	●
Viscosity at 20 °C, 40 °C, and 50 °C	ISO 3104, DIN 51562-1, ASTM D7042	●	●	●	●
Volume fraction of emulsified concentrate	DIN 51368 in conjunction with DIN 51423-2	●	–	●	–
Foreign oil proportion		●	●	●	●
Cleanliness level	ISO 4406	●	●	●	●
Content of foreign solid matter	ISO 4405	●	●	●	●
Microbial stability with details on bacteria, fungi, yeasts, and germ count		●	●	●	–
Elements	DIN 51399-1	●	●	●	●

Optional information

Property or test conditions	Test method	HFAE	HFAS	HFB	HFC
Reserve alkalinity compared with pH values 3.3 and 5.5		●	●	●	●
Testing in the four-ball apparatus	ISO 20623	–	–	–	●
Air separation ability at 50 °C	ISO 9120	–	–	–	●

Information

- If possible, compare the measurement results with the values of new oil or available trend analyses.
- The test report should include an evaluation / assessment pertaining to the further use of the hydraulic fluid.

When using fire-resistant, water-containing hydraulic fluids, the same servicing and maintenance requirements as applied for HLP/HVLP mineral oil are necessary. However, the scope of the analysis/analysis methods have to be adapted to the fluid properties.
After changing over hydraulic fluids, it is recommended that the filter be replaced again after 50 operating hours as fluid aging products may have detached themselves (“self-cleaning effect”).
Fire-resistant, water-containing hydraulic fluids contain alkaline additives. They are used both for the neutralization of contamination and for corrosion protection in the hydraulic system. If the reserve alkalinity drops significantly below the value for the unused hydraulic fluid, there is a chance that fully developed, acidic reaction products can no longer be fully neutralized. The risk of electrochemical corrosion in the system increases, which is why the proportion of corrosion protection inhibitors have to be checked during operation (reserve alkalinity compared with pH values 3.3 and 5.5).

If the water contained has noticeably vaporized, then distilled water or VE water needs to be replenished in order to set the initial viscosity; tap water must never be used. The addition of larger quantities of water should be done slowly and, if possible, in several positions during ongoing operation, so as to prevent the pump from occasionally sucking in pure water, and thus being damaged by that. It is recommended that the corresponding amount of water prior to the addition be mixed with approximately the same amount of HFC fluid, for example.

Ultimately, the evaluation by the test lab or lubricant manufacturers is authoritative. Their recommendation should be urgently observed.
In case of warranty, liability, or guarantee claims to Bosch Rexroth, service verification and/or the results of fluid analyses are to be provided.

5 Disposal and environmental protection

All fire-resistant, water-containing hydraulic fluids, are, like mineral oil-based hydraulic fluids, subject to special disposal obligations.
The respective lubricant manufacturers provide specifications on environmentally friendly handling and storage.
Please ensure that spilled or splashed fluids are absorbed with appropriate adsorbents or by a technique that prevents it contaminating water courses, the ground, or sewerage systems.

It is also not permitted to mix fluids when disposing of hydraulic fluids. Regulations governing the handing of used oils stipulate that used oils are not to be mixed with other products. Non-compliance will increase disposal costs.

Both the national legal or regulatory provisions and the information given in the respective safety data sheets (e.g. waste codes) must be observed for the disposal of the relevant hydraulic fluid.

6 Standardization

The information pertaining to the standards listed in this document relates to the respective standard edition currently valid.

7 Glossary

Additivation
Additives are chemical substances added to base fluids in small quantities to achieve or improve specific properties.

Alkaline additives
Hydraulic fluids can produce acids as a result of various aging processes. The hydraulic fluid contains alkaline additives in order to cushion/remove the acidification. These additives bind the acid residue and then become particles that are (can be) filtered out. A statement in regard of alkaline additives still effective is provided, on the one hand, by pH value, but better still is the statement pertaining to the content of free acids. In the alkaline f value range, acidic corrosion is not possible, even if acids are present.

Aging
The aging response in a hydraulic fluid describes the chronological sequence of the oxidative, thermal, and (sometimes) hydrolytic change in selected chemical and physical data under test conditions or in practice.
(See chapter 3.1.5 “Aging resistance”).

Arrhenius equation
The quantitative relation between reaction rate and temperature is described by an exponential function, the Arrhenius equation. This function is usually visualized within the typical temperature range of the hydraulic system.

ICP (optical emission spectrometry)
The ICP procedure can be used to determine various wear metals, contamination types, and additives. Practically all elements in the periodic system can be detected with this method.

Karl Fischer method
Method for determining the proportion of water in water-containing hydraulic fluids: potentiometric method according to DIN 51777-1

Cavitation
Cavitation is the creation of vapor filled cavities (vapor bubbles) in fluids due to insufficient vapor pressure and subsequent implosion when the pressure increases. When the cavities implode, extremely high acceleration, temperatures, and pressures may occur temporarily, which may damage the component surfaces.

Reserve alkalinity
Determining the reserve alkalinity is used for the investigation of the corrosion protection still available. If the determined reserve alkalinity significantly drops below the initial value of the new oil, then acidic contamination can no longer be neutralized, this means that there is a potential threat to the system becoming damaged due to corrosion.

pH value
This is the measurement for the acidic or alkaline character of an aqueous solution or emulsion.

Pour point
This is the lowest temperature at which the fluid still just flows when cooled down under set conditions. The pour point is specified in the lubricant manufacturers' technical data sheets as a reference value for achieving this flow limit.

RFA (energy dispersive or wavelength dispersive X-ray fluorescence analysis)
Is a procedure to determine almost all elements in liquid and solid samples with nearly any composition. This analysis method is suitable for examining additives and contamination, delivering fast results.

VE water
Demineralized water, also known as deionized, fully desalinated water

Viscosity
Viscosity is the measure of the internal friction of a fluid to flow. It is defined as the property of a substance to flow under tension. Viscosity is the most important characteristic for describing the load-bearing capacity of a hydraulic fluid.
Kinematic viscosity is the ratio of the dynamic viscosity and the density of the fluid; the unit is mm^2/s. Hydraulic fluids are categorized in ISO viscosity classes by kinematic viscosity. The reference temperature for this is 40 °C.

Viscosity index (VI)
Refers to the viscosity temperature behavior of a fluid.
The lower the change of viscosity in relation the temperature, the higher the VI.

Axial piston units for operation with fire-resistant hydraulic fluids - water-free and water-containing (HFDR, HFDU, HFA, HFB, HFC)

RE 90225
Edition: 07.2016

Application requirements and technical data for axial piston units

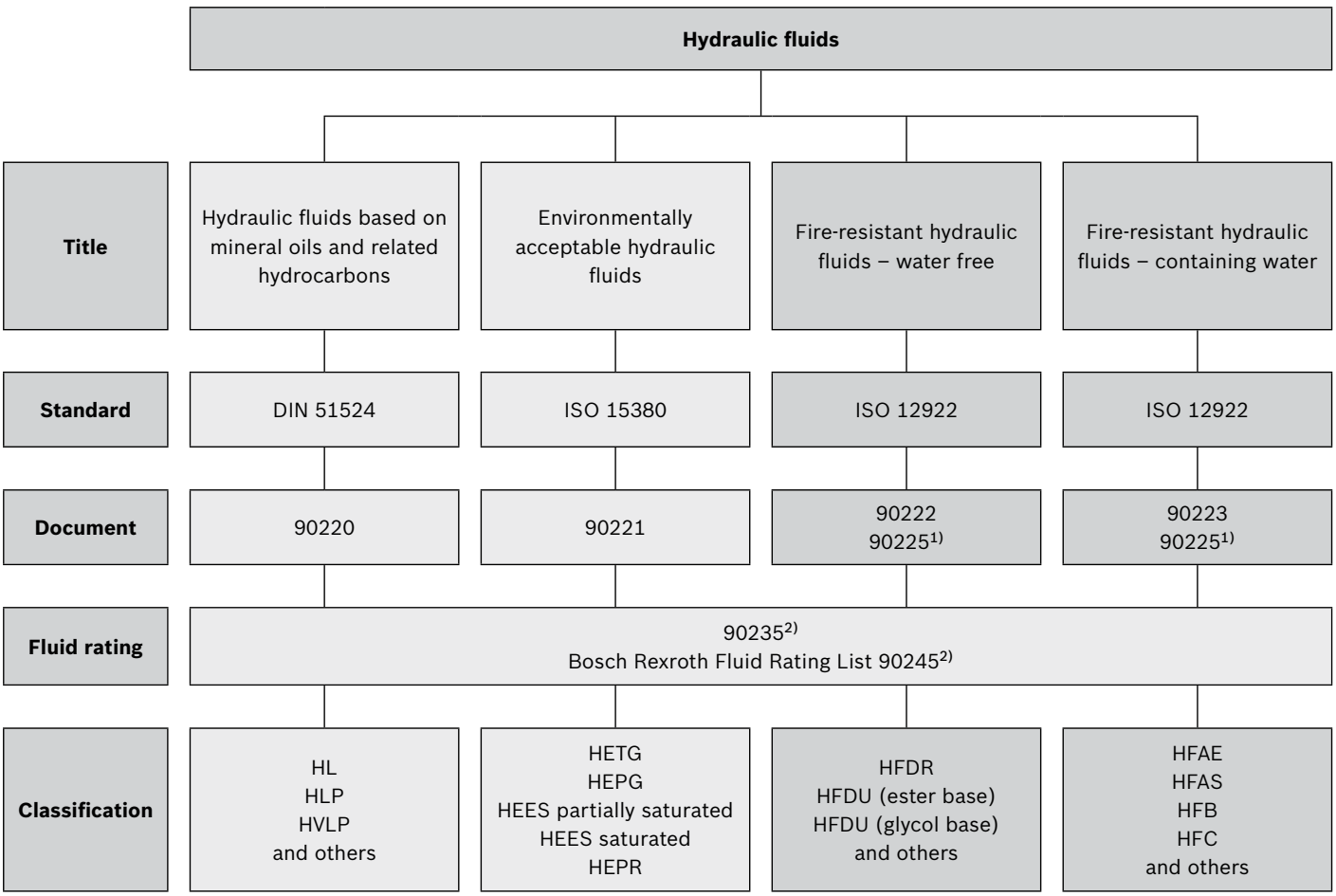

1) Valid for Bosch Rexroth axial piston units
2) Valid for Bosch Rexroth Business Unit "Mobile Applications" – pumps and motors

RE 90225/07.2016 Bosch Rexroth AG

Contents

1	Basic information	3
2	Classification of HF-hydraulic fluids	4
3	Technical data for axial piston units operating with HF-hydraulic fluids	5
3.1	Swashplate pumps for open circuit	5
3.2	Swashplate pumps for closed circuit	9
3.3	Bent-axis pumps for open circuit	11
3.4	Swashplate motor	13
3.5	Bent-axis motors	13

1 Basic information

In accordance with DIN 51502 and DIN EN ISO 6743-4, fire resistant fluids – hereinafter referred to as HF hydraulic fluids – are divided into four groups A, B, C, D and correspondingly designated HFA, HFB, HFC, HFD. In the designation “HF”, the “H” for “hydraulic fluid” and “F” is for “fire resistant”.

In general, fire-resistant hydraulic fluids are divided into water-free, fire-resistant hydraulic fluids and water-containing, fire-resistant hydraulic fluids. The water-free, fire-resistant hydraulic fluids are described in Rexroth data sheet 90222, the water-containing ones are described in Rexroth data sheet 90223.

Compared with hydraulic fluids based on mineral oils and related hydrocarbons, fire-resistant hydraulic fluids do have other, sometimes disadvantageous, properties. This document is intended to show how these special properties have to be considered in the selection and operation of axial piston units.

For axial piston units which may, in accordance with product data sheet, be operated with fire-resistant hydraulic fluids, note the following:

- The operation with HFA, HFB and HFC hydraulic fluids usually requires a reduction in the permissible pressures and rotational speeds. Depending on the product size or nominal size, a special version of the axial piston unit is needed (version **E**-...).
  However, Rexroth hydraulic components that have been specifically developed for water-containing, fire-resistant hydraulic fluids are available without limitation of operational data (e.g. 92053 axial piston variable pump A4VSO for HFC hydraulic fluids).
- When using hydraulic fluids of the category HFDU (ester base), there are permissible standard values for pressure and rotational speed for these axial piston units just as there are for hydraulic fluids based on mineral oils and related hydrocarbons. For operation with HFDR and HFDU (glycol base), for example, a reduction in the permissible rotational speeds results from the significantly higher density of the fluid.
- Note that for almost all HF hydraulic fluids, due to the higher density compared with hydraulic fluids based on mineral oils, the pressure will not fall below the minimum permissible suction pressure at the pump inlet.
- Additional technical data and required sealing materials for the axial piston units are listed in the table on page 4.

When ordering the axial piston unit, please state in plain text the hydraulic fluid that is to be used.

2 Classification of HF-hydraulic fluids

Classification	Containing water					Water-free		
	HFAE	**HFAS**	**HFB**	**HFC**	**HFC-E**[3]	**HFDR**	**HFDU**[4] **(Glycol base)**	**HFDU (Ester base)**
Features	Oil-in-water emulsions	Chemical solutions in water	Water-in-oil emulsions	Watery polymer solutions	Watery polymer solutions	Basic fluids	Basic fluids	Basic fluids
						Phosphoric acid ester	Glycols	Ester
Water content [%(m/m)]	≥ 95	≥ 95	≥ 40	≥ 35	≥ 20±2	–	–	–
Reservoir temperature T [°C]	5 to 50	5 to 50	5 to 50	-20 to 50	-20 to 70	80	80	80
Optimal reservoir temperature T_{opt} [°C]	40	40	40	40	40	70	70	70
Bearing service life[1] [%]	10	10	20	100[2] 20	100[2] 20	100	100	100
Cleanliness level acc. to ISO 4406	– / 18 / 15	– / 18 / 15	– / 18 / 15	– / 18 / 15	– / 18 / 15	20 / 18 / 15	20 / 18 / 15	20 / 18 / 15
Filter material	Glass fiber, do not use cellulose (filter paper)					–	–	–
Sealing material	NBR	NBR	NBR	NBR	NBR	FKM	FKM	FKM
Minimum suction pressure Port **S** $p_{s\,min}$ [bar] (operation as a pump, open circuit)	1.0 (abs.)	1.0 (abs.)	1.0 (abs.)	1.0 (abs.)	1.0 (abs.)	1.0 (abs.)	1.0 (abs.)	1.0 (abs.)

Notice

- Sealing material and filter grade is to be agreed upon with the manufacturer of the hydraulic fluid or with Bosch Rexroth Filtration System.
  Link: Bosch Rexroth Filtration System
- Compared to hydraulic fluids based on mineral oils, HFC hydraulic fluids have a very good low-temperature performance, a lower pour point and a lower viscosity-pressure coefficients.
- Bosch Rexroth offers the rating of hydraulic fluids for Rexroth hydraulic components as a service. You can find further information on this in the following data sheet:
  90235: Rating of hydraulic fluids for Rexroth hydraulic components

1) Attainable bearing service life based on operation with hydraulic fluids based on mineral oils, according to the specifications of the bearing manufacturer.
Practical application cases show results that are much higher.

2) Axial piston variable pump A4VSO for HFC hydraulic fluids, see document 92053

3) Not standardized according to ISO 12922.

4) Can be water-soluble

3 Technical data for axial piston units operating with HF-hydraulic fluids

Notice

- Maximum permissible rotational speeds
- In the following tables, HFA includes HFAE and HFAS
- Nominal pressure/maximum pressure for HFD corresponds to the specifications for mineral oil; see product data sheet
- For HFDU (ester and glycol) as well as for HFDR, there is no pressure limitation
- For HFDR and HFDU (glycol), the maximum allowable rotational speed must be reduced due to the high density of the hydraulic fluid
- The manufacturer's specifications concerning the suction performance, the temperatures, the working pressures and the rotational speeds are to be strictly adhered to for a long service life of the axial piston unit

3.1 Swashplate pumps for open circuit

Variable pump A4VSO series 1x and series 30

for open circuit (data sheet 92050)

Size			40	71	125	180	250	355	500	750	1000
HFA	Nominal pressure p_N = 140 bar Maximum pressure p_{max} = 160 bar	rpm	1950[1)]	1650	1350	1350	1120	1120	1000[1)]	900	750
HFB	Nominal pressure p_N = 160 bar Maximum pressure p_{max} = 210 bar	rpm	2100[1)]	1760	1450	1450	1200	1200	1050[1)]	960	800
HFC	Nominal pressure p_N = 250 bar Maximum pressure p_{max} = 280 bar	rpm	2100[1)]	[2)]	[2)]	[2)]	[2)]	[2)]	1050[1)]	960	800
HFD	HFDR, HFDU (glycol base)	rpm	2100	1760	1450	1450	1200	1200	1050	960	800
	HFDU (ester base)	rpm	2600	2200	1800	1800	1500	1500	1320	1200	1000

Variable pump A4VSO series 1x and series 30 for HFC hydraulic fluids

for open circuit (data sheet 92053)

Size			71	125	180	250	355
HFA			See table above: Variable pump A4VSO series 1x and series 30 Please contact us.				
HFB			See table above, variable pump A4VSO series 1x and series 30 Please contact us.				
HFC	Nominal pressure p_N = 350 bar Maximum pressure p_{max} = 400 bar	rpm	2200[3)]	1800[3)]	1800[3)]	1500[3)4)]	1500[3)]
HFD			See table above, variable pump A4VSO series 1x and series 30 Please contact us.				

1) Version E-A4VSO
2) See table below, variable pump A4VSO series 1x and series 30 for HFC hydraulic fluids
3) Version A4VSO-F
4) Version A4VSO-F2

Fixed pump A4FO series 10, series 3x

for open circuit (data sheet 91455)

Size			16	22	28	40	71	125	180	250	500
HFA	Nominal pressure p_N = 140 bar Maximum pressure p_{max} = 160 bar	rpm	–	–	–	–	1650[1)]	1350[1)]	1350[1)]	1120[1)]	1000[1)]
HFB	Nominal pressure p_N = 160 bar Maximum pressure p_{max} = 210 bar	rpm	–	–	–	–	1760[1)]	1450[1)]	1450[1)]	1200[1)]	1050[1)]
HFC	Nominal pressure p_N = 250 bar Maximum pressure p_{max} = 280 bar	rpm	–	–	–	–	1760[1)]	1450[1)]	1450[1)]	1200[1)]	1050[1)]
HFD	HFDR, HFDU (glycol base)	rpm	3200	2880	2400	2200	1760	1450	1450	1200	1050
	HFDU (ester base)	rpm	4000	3600	3000	2750	2200	1800	1800	1500	1320

Variable pump A10VO series 31

for open circuit (data sheet 92701)

Size			18[2)]	28	45	71	100	140
HFA	not permissible		–	–	–	–	–	–
HFB	not permissible		–	–	–	–	–	–
HFC	not permissible		–	–	–	–	–	–
HFD	HFDR, HFDU (glycol base)	rpm	2650	2400	2100	1760	1600	1450
	HFDU (ester base)	rpm	3300	3000	2600	2200	2000	1800

Variable pump A10VSO series 31

for open circuit (data sheet 92711)

Size			18	28	45	71	100	140
HFA	Nominal pressure p_N = 140 bar Maximum pressure p_{max} = 160 bar	rpm	2450[3)]	2250[3)]	1950[3)]	1650[3)]	1500[3)]	1350[3)]
HFB	Nominal pressure p_N = 140 bar Maximum pressure p_{max} = 160 bar	rpm	2650[3)]	2400[3)]	2100[3)]	1760[3)]	1600[3)]	1450[3)]
HFC	Nominal pressure p_N = 175 bar Maximum pressure p_{max} = 210 bar	rpm	2650[3)]	2400[3)]	2100[3)]	1760[3)]	1600[3)]	1450[3)]
HFD	HFDR, HFDU (glycol base)	rpm	2650	2400	2100	1760	1600	1450
	HFDU (ester base)	rpm	3300	3000	2600	2200	2000	1800

Variable pump A10VO series 32

for open circuit (data sheet 92705)

Size			45	71	100	140
HFA	not permissible		–	–	–	–
HFB	not permissible		–	–	–	–
HFC	not permissible		–	–	–	–
HFD	HFDR, HFDU (glycol base)	rpm	2100	1760	1600	1450
	HFDU (ester base)	rpm	2600	2200	2000	1800

1) Version E-A4FO
2) Version A10VSO
3) Version E-A10VSO

Variable pump A10VSO series 32

for open circuit (data sheet 92714)

Size			45	71	100	140	180
HFA	not permissible		–	–	–	–	–
HFB	not permissible		–	–	–	–	–
HFC	not permissible		–	–	–	–	–
HFD	HFDR, HFDU (glycol base)	rpm	2100	1760	1600	1450	On request
	HFDU (ester base)	rpm	2600	2200	2000	1800	On request

Variable pump A11VO series 1x

for open circuit (data sheet 92500)

Size			40	60	75	95	130	145	190	260
HFA	not permissible		–	–	–	–	–	–	–	–
HFB	not permissible		–	–	–	–	–	–	–	–
HFC	not permissible		–	–	–	–	–	–	–	–
HFD	HFDR, HFDU (glycol base)	rpm	2400	2200	2050	1900	1700	1700	1700	1450
	HFDU (ester base)	rpm	3000	2700	2550	2350	2100	2100	2100	1800

Variable pump A11VLO series 1x

for open circuit (data sheet 92500)

Size			130	145	190	260
HFA	not permissible		–	–	–	–
HFB	not permissible		–	–	–	–
HFC	not permissible		–	–	–	–
HFD	HFDR, HFDU (glycol base)	rpm	2000	2000	2000	1850
	HFDU (ester base)	rpm	2500	2500	2500	2300

Variable pump A11VO series 41[1)]

for open circuit (data sheet 92510)

Size			280
HFA	not permissible		–
HFB	not permissible		–
HFC	not permissible		–
HFD	HFDR, HFDU (glycol base)	rpm	1450
	HFDU (ester base)	rpm	1800

1) Version P

VVariable pump A11VLO series 41[1)]

for open circuit (data sheet 92510)

Size			280
HFA	not permissible		–
HFB	not permissible		–
HFC	not permissible		–
HFD	HFDR, HFDU (glycol base)	rpm	1850
	HFDU (ester base)	rpm	2300

Variable pump A15VO series 11[1)]

for open circuit (data sheet 92800)

Size			280
HFA	not permissible		–
HFB	not permissible		–
HFC	not permissible		–
HFD	HFDR, HFDU (glycol base)	rpm	1450
	HFDU (ester base)	rpm	1800

Variable pump A15VLO series 11[1)]

for open circuit (data sheet 92800)

Size			280
HFA	not permissible		–
HFB	not permissible		–
HFC	not permissible		–
HFD	HFDR, HFDU (glycol base)	rpm	1850
	HFDU (ester base)	rpm	2300

Variable pump A18VO series 11

for open circuit (data sheet 92270)

Size		55	80	107
HFA	not permissible	–	–	–
HFB	not permissible	–	–	–
HFC	not permissible	–	–	–
HFD		For operation with HFD hydraulic fluids, limitations for the technical data and the sealing materials are to be observed. Please contact us.		

1) Version P

Variable pump A18VLO series 11

for open circuit (data sheet 92280)

Size		80
HFA	not permissible	–
HFB	not permissible	–
HFC	not permissible	–
HFD		For operation with HFD hydraulic fluids, limitations for the technical data and the sealing materials are to be observed. Please contact us.

Variable double pump A20VO series 10

for open circuit (data sheet 93100)

Size			95	190	260	520
HFA	Nominal pressure p_N = 140 bar Maximum pressure p_{max} = 160 bar	rpm	–	–	–	1000
HFB	Nominal pressure p_N = 160(140[1)]) bar Maximum pressure p_{max} = 210(160[1)]) bar	rpm	–	–	–	1000
HFC	Nominal pressure p_N = 250(175[1)]) bar Maximum pressure p_{max} = 280(210[1)]) bar	rpm	–	–	–	1000
HFD	HFDR, HFDU (glycol base)	rpm	1900	2000	1850	1000
	HFDU (ester base)	rpm	2350	2500	2300	1300

3.2 Swashplate pumps for closed circuit

Variable pump A4VSG series 1x and series 30

for closed circuit (data sheet 92100)

Size			40	71	125	180	250	355	500	750	1000
HFA	Nominal pressure p_N = 140 bar Maximum pressure p_{max} = 160 bar	rpm	2750[1)2)]	2400[1)2)]	1950[1)2)]	1800[1)2)]	1650[1)2)]	1500[1)2)]	1350[1)2)]	1200[2)]	1200[2)]
HFB	Nominal pressure p_N = 160 bar Maximum pressure p_{max} = 210 bar	rpm	3000[1)2)]	2550[1)2)]	2100[1)2)]	1920[1)2)]	1750[1)2)]	1600[1)2)]	1450[1)2)]	1300[2)]	1300[2)]
HFC	Nominal pressure p_N = 250 bar Maximum pressure p_{max} = 280 bar	rpm	3000[1)2)]	2550[1)2)]	2100[1)2)]	1920[1)2)]	1750[1)2)]	1600[1)2)]	1450[1)2)]	1300[2)]	1300[2)]
HFD		rpm	3700	3200	2600	2400	2200	2000	1800	1600	1600

Variable pump A4VG series 32

for closed circuit (data sheet 92003)

Size			28	40	56	71	90	125	180	250
HFA	not permissible		–	–	–	–	–	–	–	–
HFB	not permissible		–	–	–	–	–	–	–	–
HFC	not permissible		–	–	–	–	–	–	–	–
HFD		rpm	4250	4000	3600	3300	3050	2850	2500	2400

1) Bearing flushing at **U** port required!

2) Version E-A4VSG

Variable pump A4VG series 40

for closed circuit (data sheet 92004)

Size			45	65	85	110	145	175	210	280
HFA	not permissible		–	–	–	–	–	–	–	–
HFB	not permissible		–	–	–	–	–	–	–	–
HFC	not permissible		–	–	–	–	–	–	–	–
HFD			For operation with HFD hydraulic fluids, limitations for the technical data and the sealing materials are to be observed. Please contact us.							

Variable pump A4VTG series 33

for closed circuit (data sheet 92013)

Size			71	90
HFA	not permissible		–	–
HFB	not permissible		–	–
HFC	not permissible		–	–
HFD			For operation with HFD hydraulic fluids, limitations for the technical data and the sealing materials are to be observed. Please contact us.	

Variable pump A10VG series 10

for closed circuit (data sheet 92750)

Size			18	28	45	63
HFA	not permissible		–	–	–	–
HFB	not permissible		–	–	–	–
HFC	not permissible		–	–	–	–
HFD		rpm	5000	4250	3800	3500

Variable double pump A20VG series 11 and A22VG series 11

for closed circuit (data sheet 93220)

Size			45
HFA	not permissible		–
HFB	not permissible		–
HFC	not permissible		–
HFD			For operation with HFD hydraulic fluids, limitations for the technical data and the sealing materials are to be observed. Please contact us.

Variable double pump A22VG series 40

for closed circuit (data sheet 93221)

Size		45
HFA	not permissible	–
HFB	not permissible	–
HFC	not permissible	–
HFD		For operation with HFD hydraulic fluids, limitations for the technical data and the sealing materials are to be observed. Please contact us.

Variable double pump A24VG series 10

for closed circuit (data sheet 93240)

Size		45 - 45	65 - 45	65 - 65
HFA	not permissible	–	–	–
HFB	not permissible	–	–	–
HFC	not permissible	–	–	–
HFD		For operation with HFD hydraulic fluids, limitations for the technical data and the sealing materials are to be observed. Please contact us.		

Variable double pump A30VG series 10

for closed circuit (data sheet 93430)

Size		28
HFA	not permissible	–
HFB	not permissible	–
HFC	not permissible	–
HFD		For operation with HFD hydraulic fluids, limitations for the technical data and the sealing materials are to be observed. Please contact us.

3.3 Bent-axis pumps for open circuit

Fixed pump A2FO series 6

for open circuit (data sheet 91401)

Size			5	10	12	16	23	28	32	45	56	63	80
HFA	not permissible		–	–	–	–	–	–	–	–	–	–	–
HFB	Nominal pressure p_N = 160 bar Maximum pressure p_{max} = 210 bar	rpm	4500	2520	2520	2520	2000	2000	2000	1800	1600	1600	1440
HFC	Nominal pressure p_N = 200 bar Maximum pressure p_{max} = 250 bar	rpm	4500	2520	2520	2520	2000	2000	2000	1800	1600	1600	1440
HFD	HFDR, HFDU (glycol base)	rpm	4500	2520	2520	2520	2000	2000	2000	1800	1600	1600	1440
	HFDU (ester base)	rpm	5600	3150	3150	3150	2500	2500	2500	2240	2000	2000	1800

Size			90	107	125	160	180	200	250	355	500	710	1000
HFA	not permissible		–	–	–	–	–	–	–	–	–	–	–
HFB	Nominal pressure p_N = 160 bar Maximum pressure p_{max} = 210 bar	rpm	1440	1280	1280	1160	1160	1240	1200[1)]	1060[1)]	950[1)]	950[1)]	750[1)]
HFC	Nominal pressure p_N = 200 bar Maximum pressure p_{max} = 250 bar	rpm	1440	1280	1280	1160	1160	1240	1200[1)]	1060[1)]	950[1)]	950[1)]	750[1)]
HFD	HFDR, HFDU (glycol base)	rpm	1440	1280	1280	1160	1160	1240	1200[2)]	1060[2)]	950[2)]	950[2)]	750[2)]
	HFDU (ester base)	rpm	1800	1600	1600	1450	1450	1550	1500[2)]	1320[2)]	1200[2)]	1200[2)]	950[2)]

Variable pump A7VO series 63

for open circuit (data sheet 92202)

Size			55	80	107	160
HFA	not permissible		–	–	–	–
HFB	Nominal pressure p_N = 160 bar Maximum pressure p_{max} = 210 bar	rpm	2000	1800	1600	1400
HFC	Nominal pressure p_N = 200 bar Maximum pressure p_{max} = 250 bar	rpm	2000	1800	1600	1400
HFD	HFDR, HFDU (glycol base)	rpm	2000	1800	1600	1400
	HFDU (ester base)	rpm	2500	2240	2150	1900

Variable pump A7VLO series 63

for open circuit (data sheet 92203)

Size			250	355	500
HFA	not permissible		–	–	–
HFB	not permissible		–	–	–
HFC	not permissible		–	–	–
HFD	HFDR, HFDU (glycol base)	rpm	1200	1060	950
	HFDU (ester base)	rpm	1500	1320	1200

1) Version E-A2FLO
2) Version A2FLO

Variable double pump A8VO series 6x

for open circuit (data sheet 93010)

Size			55	80	107	140	200
HFA	not permissible		–	–	–	–	–
HFB	not permissible		–	–	–	–	–
HFC	not permissible		–	–	–	–	–
HFD	HFDR, HFDU (glycol base)	rpm	2000	1800	1600	–	–
	HFDU (ester base)	rpm	2500	2240	2150	2100	1950

Fixed pump A17FO series 10

for open circuit (data sheet 91520)

Size		23	32	45	63	80	107
HFA	not permissible	–	–	–	–	–	–
HFB	not permissible	–	–	–	–	–	–
HFC	not permissible	–	–	–	–	–	–
HFD		For operation with HFD hydraulic fluids, limitations for the technical data and the sealing materials are to be observed. Please contact us.					

Fixed pump A17FNO series 10

for open circuit (data sheet 91510)

Size		125
HFA	not permissible	–
HFB	not permissible	–
HFC	not permissible	–
HFD		For operation with HFD hydraulic fluids, limitations for the technical data and the sealing materials are to be observed. Please contact us.

3.4 Swashplate motor

Fixed motor A4FM series 1x and series 3x

for open and closed circuit (data sheet 91120)

Size			22	28	40	56	71	125	250	500
HFA	Nominal pressure p_N = 140 bar Maximum pressure p_{max} = 160 bar	rpm	–	–	–	–	2400[1)]	1950[1)]	1650[1)]	1350[1)]
HFB	Nominal pressure p_N = 160 bar Maximum pressure p_{max} = 210 bar	rpm	–	–	–	–	2550[1)]	2100[1)]	1750[1)]	1450[1)]
HFC	Nominal pressure p_N = 250 bar Maximum pressure p_{max} = 280 bar	rpm	–	–	–	–	2550[1)]	2100[1)]	1750[1)]	1450[1)]
HFD		rpm	4250	4250	4000	3600	3200	2600	2200	1800

1) Version E-A4FM

3.5 Bent-axis motors

Fixed motor A2FM series 6x

for open and closed circuit (data sheet 91001)

Size			10	12	16	23	28	32	45	56	63	80	90
HFA	not permissible		–	–	–	–	–	–	–	–	–	–	–
HFB	Nominal pressure p_N = 160 bar Maximum pressure p_{max} = 210 bar	rpm	4800	4800	4800	3800	3800	3800	3400	3000	3000	2680	2680
HFC	Nominal pressure p_N = 200 bar Maximum pressure p_{max} = 250 bar	rpm	4800	4800	4800	3800	3800	3800	3400	3000	3000	2680	2680
HFD		rpm	8000	8000	8000	6300	6300	6300	5600	5000	5000	4500	4500

Size			107	125	160	180	200	250	355	500	710	1000
HFA	not permissible		–	–	–	–	–	–	–	–	–	–
HFB	Nominal pressure p_N = 160 bar Maximum pressure p_{max} = 210 bar	rpm	2400	2400	2100	2100	2200	2150[1)]	1800[1)]	1600[1)]	1280[1)]	1280[1)]
HFC	Nominal pressure p_N = 200 bar Maximum pressure p_{max} = 250 bar	rpm	2400	2400	2100	2100	2200	2150[1)]	1800[1)]	1600[1)]	1280[1)]	1280[1)]
HFD		rpm	4000	4000	3600	3600	2750	2700[2)]	2240[2)]	2000[2)]	1600[2)]	1600[2)]

Fixed motor A2FE series 6x

for open and closed circuit (data sheet 91008)

Size			28	32	45	56	63	80	90	107	125	160	180
HFA	not permissible		–	–	–	–	–	–	–	–	–	–	–
HFB	Nominal pressure p_N = 160 bar Maximum pressure p_{max} = 210 bar	rpm	3800	3800	3400	3000	3000	2680	2680	2400	2400	2100	2100
HFC	Nominal pressure p_N = 200 bar Maximum pressure p_{max} = 250 bar	rpm	3800	3800	3400	3000	3000	2680	2680	2400	2400	2100	2100
HFD		rpm	6300	6300	5600	5000	5000	4500	4500	4000	4000	3600	3600

Size			250	355
HFA	not permissible		–	–
HFB	Nominal pressure p_N = 160 bar Maximum pressure p_{max} = 210 bar	rpm	2150[3)]	1800[3)]
HFC	Nominal pressure p_N = 200 bar Maximum pressure p_{max} = 250 bar	rpm	2150[3)]	1800[3)]
HFD		rpm	2700[4)]	2240[4)]

1) Version E-A2FLM
2) Version A2FLM
3) Version E-A2FLE
4) Version A2FLE

Variable motor A6VM series 63

for open and closed circuit (data sheet 91604)

Size			28	55	80	107	140	160	200	250	355	500	1000
HFA	not permissible		–	–	–	–	–	–	–	–	–	–	–
HFB	Nominal pressure p_N = 160 bar Maximum pressure p_{max} = 210 bar	rpm	3700	3000	2600	2300	2200	2100	1900	2150[1)]	1800[1)]	1600[1)]	1280[1)]
HFC	Nominal pressure p_N = 200 bar Maximum pressure p_{max} = 250 bar	rpm	3700	3000	2600	2300	2200	2100	1900	2150[1)]	1800[1)]	1600[1)]	1280[1)]
HFD		rpm	5550	4450	3900	3550	3250	3100	2900	2700[2)]	2240[2)]	2000[2)]	1600[2)]

Variable motor A6VE series 63

for open and closed circuit (data sheet 91606)

Size			28	55	80	107	160	250
HFA	not permissible		–	–	–	–	–	–
HFB	Nominal pressure p_N = 160 bar Maximum pressure p_{max} = 210 bar	rpm	3700	3000	2600	2300	2100	2150[3)]
HFC	Nominal pressure p_N = 200 bar Maximum pressure p_{max} = 250 bar	rpm	3700	3000	2600	2300	2100	2150[3)]
HFD		rpm	5550	4450	3900	3550	3100	2700[4)]

Variable motor A6VM series 65

for open and closed circuit (data sheet 91607)

Size			55	80	107	140	160	200
HFA	not permissible		–	–	–	–	–	–
HFB	Nominal pressure p_N = 160 bar Maximum pressure p_{max} = 210 bar	rpm	3000	2600	2300	2200	2100	1900
HFC	Nominal pressure p_N = 200 bar Maximum pressure p_{max} = 250 bar	rpm	3000	2600	2300	2200	2100	1900
HFD		rpm	4450	3900	3550	3250	3100	2900

Variable motor A6VM series 71

for open and closed circuit (data sheet 91610)

Size			60	85	115	150	170	215
HFA	not permissible		–	–	–	–	–	–
HFB	Nominal pressure p_N = 160 bar Maximum pressure p_{max} = 210 bar	rpm	3000	2600	2300	2200	2100	1900
HFC	Nominal pressure p_N = 200 bar Maximum pressure p_{max} = 250 bar	rpm	3000	2600	2300	2200	2100	1900
HFD		rpm	4450	3900	3550	3250	3100	2900

1) Version E-A6VLM
2) Version A6VLM
3) Version E-A6VLE
4) Version A6VLE

Rating of hydraulic fluids for Rexroth hydraulic components (pumps and motors)

RE 90235
Edition: 02.2015
Replaces 01.2013

Bosch Rexroth offers the rating of hydraulic fluids as service – inclusive assistance and consulting of experienced engineers.

Hydraulic fluids

Title	Hydraulic fluids based on mineral oils and related hydrocarbons	Environmentally acceptable hydraulic fluids	Fire-resistant hydraulic fluids, water-free	Fire-resistant hydraulic fluids, water-containing
Standard	DIN 51524	ISO 15380	ISO 12922	ISO 12922
Document	90220	90221	90222 90225[1)]	90223 90225[1)]
Fluid rating	90235[2)] Bosch Rexroth Fluid Rating List 90245[2)]			
Classification	HL HLP HVLP and more	HETG HEPG HEES partially saturated HEES saturated HEPR	HFDR HFDU (ester base) HFDU (glycol base) and more	HFAE HFAS HFB HFC and more

1) Valid for Bosch Rexroth axial piston units
2) Valid for Bosch Rexroth Business Unit “Mobile Applications” – pumps and motors

The safe and reliable operation of industrial and mobile equipment is only possible if the hydraulic fluid used is selected with respect to the application. The main tasks of the hydraulic fluid are e.g. transmission of power, lubrication of the components, reduction of friction, corrosion prevention and heat dissipation. Unfortunately the common element “hydraulic fluid” is often disregarded during conceptual design.
Increased requirements on machines and equipment constantly raise the quality requirements on the hydraulic fluid used. For using a suitable hydraulic fluid, adequate knowledge and experience of this are necessary.
Therefore Bosch Rexroth offers the rating of hydraulic fluids for Rexroth hydraulic components as service.
Bosch Rexroth defines hydraulic fluids on the basis of the illustration on page 1. Application notes and requirements for Rexroth hydraulic components can be taken out of the data sheets mentioned in this illlustration on page 1.

1 Description

Minimum requirements
At present the standards conformity for the minimum requirement on fluids is defined in our Bosch Rexroth component data sheets. The fluid manufacturers’ technical data sheets have to include that the specific standards are met. The plausibility and correctness of the fluid data are not reviewed by Bosch Rexroth.

Bosch Rexroth Fluid Rating
Fluid data of the manufacturer has to be according to ISO (selected characteristic values of standards) and Bosch Rexroth requirements (tightened values of standards and extended Bosch Rexroth requirements). Bosch Rexroth demands the data to be confirmed in writing. The plausibility and correctness of the fluid data is reviewed by Bosch Rexroth.

The extended Bosch Rexroth requirements are beneath others specific fluid tests, that show suitability of the hydraulic fluid with defined Rexroth components and which are constituents of the respective specification.
Depending on the utilized Rexroth hydraulic components and the oil type, the corresponding fluid test has to be passed prior to the assignment of the Bosch Rexroth fluid rating.

Retention samples (finished oil, base oil) are furthermore saved. The hydraulic fluids that fulfill the Bosch Rexroth Fluid Rating requirements will be listed on the following Bosch Rexroth document.

- 90245: Bosch Rexroth Fluid Rating List

Note
The Bosch Rexroth Fluid Rating requirements cannot cover all machine and system-dependent conditions (see residual risk on rating scheme on page 3). Only single Rexroth components pumps/motors can be examined in the fluid tests. Bosch Rexroth Fluid Rating does not cover all systems and applications.
Releases for special applications are excluded from the Bosch Rexroth Fluid Rating.
The responsibility for selection of the hydraulic fluid remains with the equipment/machinery operator and the fluid manufacturer.
By means of the requirements contained in the Bosch Rexroth Fluid Rating the risk of using hydraulic fluid in combination with Rexroth hydraulic components can be considerably reduced and the reliability significantly increased.

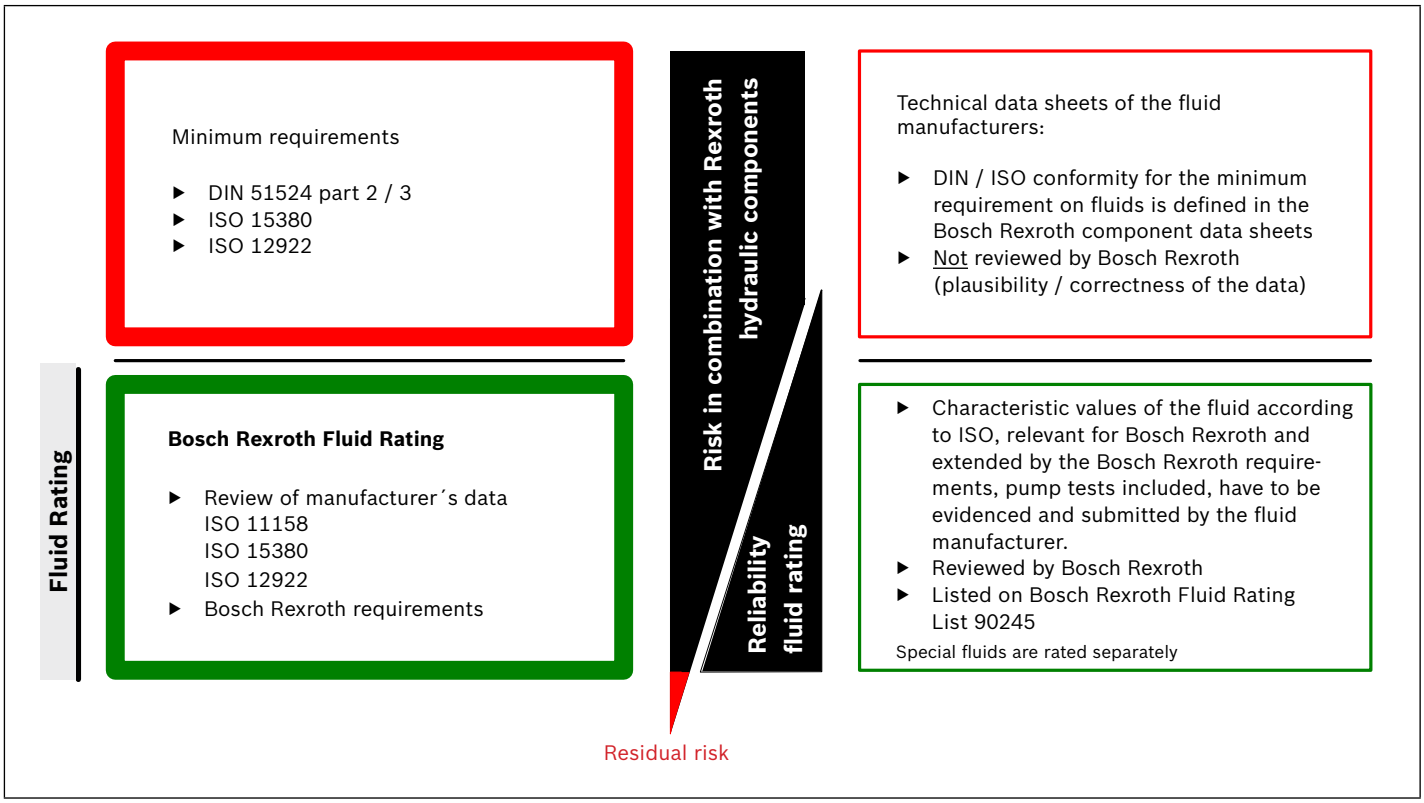

2 Process

The process of a Fluid Rating includes the following steps:

Fluid Rating Process ▼ ▼ ▼ ▼ ▼ ▼ ▼

Bosch Rexroth Fluid Rating

(BR*	Contacting fluid manufacturer)
FM**	Registration for “Fluid Rating” on website of Bosch Rexroth
BR	Reviewing registration data of the fluid manufacturer for plausibility
BR	Assignation of registration number to fluid manufacturer Activating of fluid manufacturer´s access to download area of “Fluid Rating” on the website of Bosch Rexroth
BR	Information to fluid manufacturer: 1) Registration number (=user name for login in the download area “Fluid Rating“) 2) Activating for download area is done
FM	Download of all documents (conditions, applications) necessary for “Fluid Rating”
FM	Submitting of all documents and retained samples necessary for “Fluid Rating” to Bosch Rexroth
BR	Reviewing of the manufacturer´s data, storing of retained samples
BR	when the requirements are fulfilled - hydraulic fluid will be listed on the Bosch Rexroth Fluid Rating List 90245 → **Fulfilled the requirements of Bosch Rexroth Fluid Rating 90245** validity period: 5 years

*BR: Bosch Rexroth **FM: Fluid Manufacturer

3 Fluid tests

3.1 Requests for Fluid Tests

Two different fluid tests may presently be requested by Bosch Rexroth:

- RFT-APU-CL Rexroth Fluid Test Axial Piston Unit Closed Loop (see **3.2**)
- RFT-APU-OL-HFC Rexroth Fluid Test Axial Piston Unit Open Loop-HFC (see **3.3**)

These tests may be requested independent of the Bosch Rexroth Fluid Rating. They are, however, a permanent specification of the Bosch Rexroth Fluid Rating.
Prior to the request for the Bosch Rexroth Fluid Rating the fluid test, required in the respective specification, has to be terminated positively.

The process of the fluid test includes the following steps:

FM	Request for quotation for fluid test by Bosch Rexroth			
FM	Commissioning of fluid test, submission of further documents and supplying of the fluid for the test			
BR	Implementation of the requested fluid test using defined Rexroth components	**RFT-APU-CL** Rexroth Fluid Test - Axial Piston Unit Closed Loop	**RFT-APU-OL-HFC** Rexroth Fluid Test - Axial Piston Unit Open Loop-HFC	Further fluid tests in preparation

*BR: Bosch Rexroth **FM: Fluid Manufacturer

3.2 Rexroth fluid test RFT-APU-CL

(**R**exroth **F**luid **T**est **A**xial **P**iston **U**nit **C**losed **L**oop)

Fluid test for closed loop applications using a combination of units consisting of a hydraulic pump A4VG045EP and a hydraulic motor A6VM060EP. This fluid test represents the requirements on a hydrostatic transmission.

Features of the fluid test

The suitability of the hydraulic fluid is tested at high stress under laboratory conditions. The fluid test consists of a break-in test, swivel cycle test and a corner power test.

Rating criteria

- Examination of the interaction fluid / component
  - Measurement of the component weight change respectively dimensional change
  - Material compatibility
  - Visual inspection of components /component surfaces
  - Oil analysis (start of test (SOT), during test, end of test (EOT)
- Evidence of endurance performance
- Determination of efficiency (SOT, EOT)

Test bench

▼ **Schematical hydraulic circuit diagram of the RFT-APU-CL**

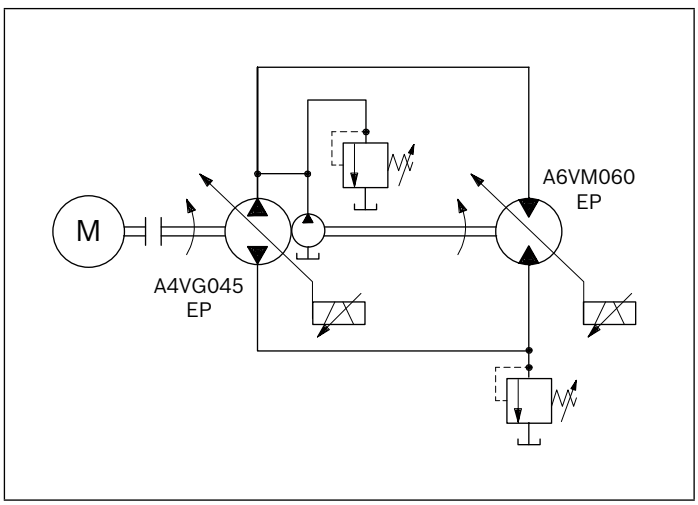

Technical data of the test components

Type	A4VG045 EP	A6VM060 EP
Data sheet	92004	91610
Operation mode	pump	motor
Nominal volume	45 cm^3	62 cm^3
Maximum speed (at $V_{g\,max}$)	4300 min^{-1}	4450 min^{-1}
Maximum pressure	500 bar	500 bar
Control	electric (EP)	electric (EP)

Operating data

1. Break-in test	A4VG045 EP	A6VM060 EP
Speed	2000 min^{-1}	2000 min^{-1}
Operating pressure	250 bar	250 bar
Leckage temperature Hydraulic motor		60 °C at port T
Operating time	10 h	10 h

2. Swivel cycle test	A4VG045 EP	A6VM060 EP
Speed	4000 min^{-1}	4000 min^{-1}
Operating pressure	450 bar	450 bar
Leckage temperature Hydraulic motor		100 °C at port T
Operating time	300 h	300 h

▼ **Swivel cycle (schematic diagram)**

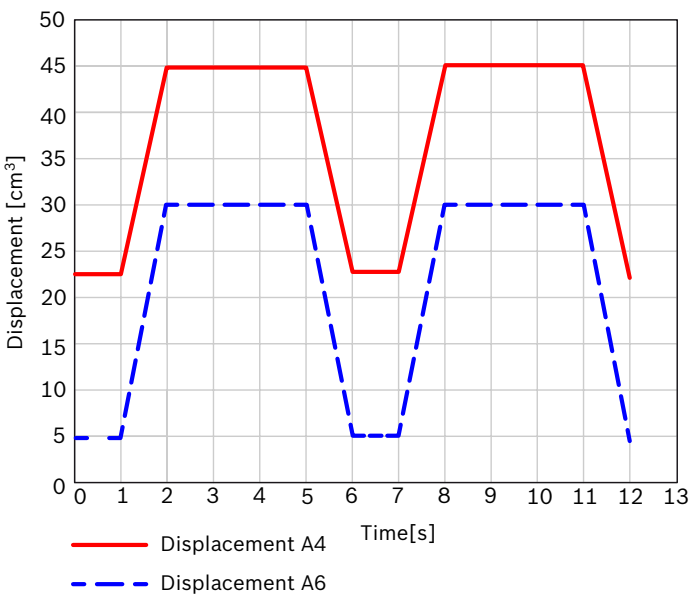

3. Corner power test	A4VG045 EP	A6VM060 EP
Speed	4000 min^{-1}	4000 min^{-1}
Operating pressure	500 bar	500 bar
Leckage temperature Hydraulic motor		100 °C at port T
Operating time	200 h	200 h

3.3 Rexroth fluid test RFT-APU-OL-HFC

(**R**exroth **F**luid **T**est **A**xial **P**iston **U**nit **O**pen **L**oop-**HFC**)

Fluid test for open loop applications using a combination of units consisting of a A4VSO swashplate axial piston combination unit (hydraulic pump and hydraulic motor) as well as an EA10VSO/31 hydraulic pump. This fluid test represents the requirements on applications demanding water-containing, fire-resistant hydraulic fluids of the HFC classification.

Features of the fluid test

The suitability of the hydraulic fluid is tested at high stress under laboratory conditions. The fluid test consists of a constant and swivel cycle test.

Rating criteria

- Examination of the interaction fluid / component
  - Wear and cavitation behaviour
  - Material compatibility
  - Visual inspection of components /component surfaces
  - Measuring records of functional relevant component surfaces
  - Oil analysis (SOT, during test, EOT)
- Evidence of endurance performance

Test bench

▼ **Schematical hydraulic circuit diagram of the RFT-APU-OL-HFC**

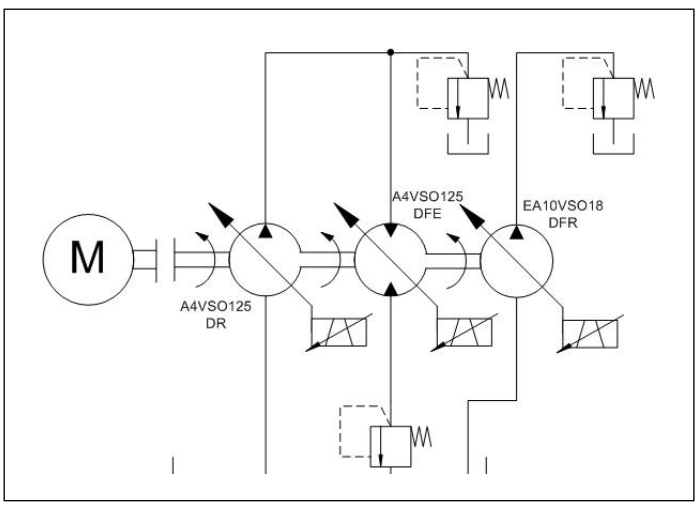

Technical data of the test components

Type	A4VSO125 DR	A4VSO125 DFE	EA10VSO18 DFR/31
Data sheet	92053	92053	92711
Operation mode	pump, self-priming	motor	pump, self-priming
Nominal volume	125 cm^3	125 cm^3	18 cm^3
Maximum speed	2200 min^{-1}	2200 min^{-1}	3300 min^{-1}
Maximum pressure	400 bar	400 bar	350 bar

Operating data

1. Constant test	A4VSO125 DR/DFE	EA10VSO18 DFR/31
Speed	1800 min^{-1}	1800 min^{-1}
Operating pressure	350 bar	175 bar
Displacement	$V_{g\,max}/V_{g\,min}$	$V_{g\,max}/V_{g\,min}$
Temperature	50 °C	50 °C
Operating time	100/100 h	100/100 h

2. Swivel cycle test	A4VSO125 DR/DFE	EA10VSO18 DFR/31
Speed	1800 min^{-1}	1800 min^{-1}
Operating pressure	350 bar	50 / 175 bar
Displacement	0,5 sec $V_{g\,min}$/ 0,5 sec $V_{g\,max}$	0,5 sec $V_{g\,min}$/ 0,5 sec $V_{g\,max}$
Temperature	50 °C	50 °C
Operating time	800 h	800 h

▼ **Swivel cycle (schematic diagram)**

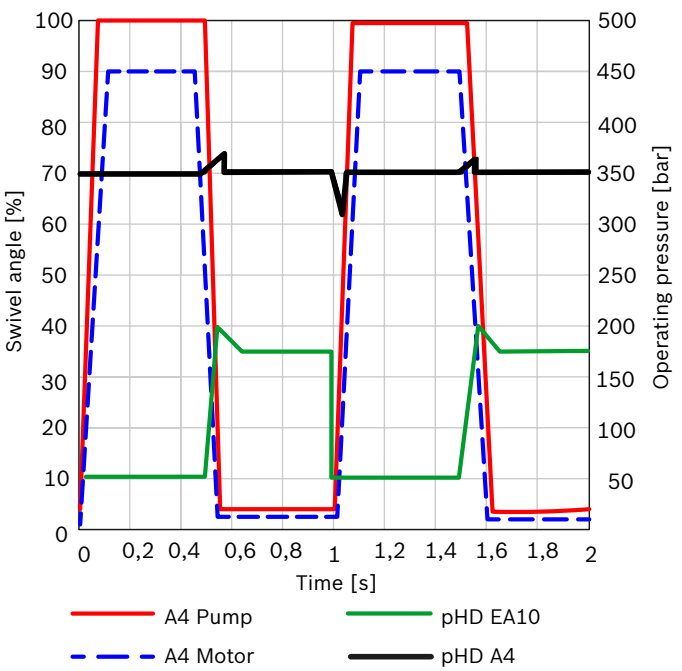

Axial piston motors
Fixed motors

Designation	Type	Size	Series	Data sheet	Page
Fixed motor	A2FM	5...1000	6x	91001	97
Fixed plug-in motor	A2FE	28...355	6x	91008	143
Fixed motor	A2FM/A2FE	45...107	70	91071	167
Fixed motor	A4FM	22...500	10/30/32	91120	191
Fixed motor	A10FM/A10FE	10...63	52	91172	203

Rexroth
Bosch Group

Axial Piston Fixed Motor
A2FM

RE 91001/06.2012 1/46
Replaces: 09.07

2

Data sheet

Series 6

Size	Nominal pressure/Maximum pressure
5	315/350 bar
10 to 200	400/450 bar
250 to 1000	350/400 bar

Open and closed circuits

Contents

Ordering code for standard program	2
Technical data	4
Dimensions	11
Flushing and boost pressure valve	34
Pressure-relief valve	36
Counterbalance valve BVD and BVE	38
Speed sensors	42
Installation instructions	44
General instructions	46

Features

- Fixed motor with axial tapered piston rotary group of bent-axis design, for hydrostatic drives in open and closed circuits
- For use in mobile and stationary applications
- The output speed is dependent on the flow of the pump and the displacement of the motor.
- The output torque increases with the pressure differential between the high-pressure and the low-pressure side.
- Finely graduated sizes permit far-reaching adaptation to the drive case
- High power density
- Small dimensions
- High total efficiency
- Good starting characteristics
- Economical design
- One-piece tapered piston with piston rings for sealing

Ordering code for standard program

	A2F		M		/	6		W	–	V						
01	02	03	04	05		06	07	08		09	10	11	12	13	14	15

Hydraulic fluid

01	Mineral oil and HFD. HFD for sizes 250 to 1000 only in combination with long-life bearings "L" (without code)		
	HFB, HFC hydraulic fluid	Sizes 5 to 200 (without code)	
		Sizes 250 to 1000 (only in combination with long-life bearings "L")	**E-**

Axial piston unit

02	Bent-axis design, fixed	**A2F**

Drive shaft bearing		**5 to 200**	**250 to 500**	**710 to 1000**	
03	Standard bearing (without code)	●	●	–	
	Long-life bearing	–	●	●	**L**

Operating mode

04	Motor (plug-in motor A2FE, see RE 91008)	**M**

Size (NG)

05	Geometric displacement, see table of values on page 7																				
	5	**10**	**12**	**16**	**23**	**28**	**32**	**45**	**56**	**63**	**80**	**90**	**107**	**125**	**160**	**180**	**200**	**250**	**355**	**500**	**710**	**1000**

Series

06		**6**

Index

07		NG10 to 180	**1**
		NG200	**3**
		NG5 and 250 to 1000	**0**

Direction of rotation

08	Viewed on drive shaft, bidirectional	**W**

Seals

09	FKM (fluor-caoutchouc)	**V**

Drive shafts		**5**	**10**	**12**	**16**	**23**	**28**	**32**	**45**	**56**	**63**	**80**	**90**	**107**	**125**	**160**	**180**	**200**	**250 to 1000**	
10	Splined shaft DIN 5480	–	●	●	●	●	●	●	–	●	●	●	●	●	●	●	●	●	–	**A**
		–	●	●	–	●	●	–	●	●	–	●	–	●	–	●	–	–	●	**Z**
	Parallel keyed shaft DIN 6885	●	●	●	●	●	●	●	–	●	●	●	●	●	●	●	●	●	–	**B**
		–	●	●	–	●	●	–	●	●	–	●	–	●	–	●	–	–	●	**P**
	Conical shaft[1)]	●	–	–	–	–	–	–	–	–	–	–	–	–	–	–	–	–	–	**C**

Mounting flanges			**5 to 250**	**355 to 1000**	
11	ISO 3019-2	4-hole	●	–	**B**
		8-hole	–	●	**H**

● = Available ❍ = On request – = Not available = Preferred program

1) Conical shaft with threaded pin and woodruff key (DIN 6888). The torque must be transmitted via the tapered press fit.

Ordering code for standard program

	A2F		M		/	6		W	–	V						
01	02	03	04	05		06	07	08		09	10	11	12	13	14	15

	Port plates for service lines[2]			5	10-16	23	28, 32	45	56,63	80,90	107-125	160-180	200	250	355-500	1000	
12	SAE flange ports A and B at rear	01	0	–	–	●	●	●	●	●	●	●	●	●	●	●	010
			7	–	–	–	–	–	–	–	–	–	–	–	●	–	017
	SAE flange ports A and B at side, opposite	02	0	–	–	●	●	●	●	●	●	●	–	●	–	–	020
			7	–	–	–	–	●	▲	▲	●	●	–	●	–	–	027
			9	–	–	–	–	–	●	●	–	–	–	–	–	–	029
	Threaded ports A and B at side, opposite	03	0	●	●	●	●	–	–	–	–	–	–	–	–	–	030
	Threaded ports A and B at side and rear[3]	04	0	–	●	●	●	●	●	–	–	–	–	❍	–	–	040
	SAE flange ports A and B at bottom (same side)	10	0	–	–	–	●	●	●	●	●	●	–	–	❍	–	100
	Port plate with 1-level pressure-relief valves for mounting a counterbalance valve[5]	BVD 17	1	–	–	–	–	–	–	–	●	–					171 178
		18	8	–	–	–	●	●	●	●	●	●	–	–	–	–	181
		BVE 18		–	–	–	–	–	–	–	●	●	–	–[4]	–	–	188
	Port plate with pressure-relief valves	19	1	–	–	–	●	●	●	●	●	●	–	–	–	–	191
			2	–	–	–	●	●	●	●	●	●	–	–	–	–	192

Valves (see pages 34 to 41)

Without valve	0
Pressure-relief valve (without pressure boost facility)	1
Pressure-relief valve (with pressure boost facility)	2
Flushing and boost pressure valve, mounted	7
Counterbalance valve BVD/BVE mounted[5][6]	8
Flushing and boost pressure valve, integrated	9

	Speed sensors (see pages 42 and 43)	5 to 16	23 to 180	200	250 to 500	710 to 1000[4]	
13	Without speed sensor (without code)	●	●	●	●	●	
	Prepared for HDD speed sensor	–	▲	▲	●	–	F
	HDD speed sensor mounted[7]	–	▲	▲	●	–	H
	Prepared for DSA speed sensor	–	❍	❍	❍	–	U
	DSA speed sensor mounted[7]	–	❍	❍	❍	–	V

Special version

14	Standard version (without code)	
	Special version for slew drives (standard with port plate 19)	J

Standard / special version

15	Standard version (without code)	
	Standard version with installation variants, e. g. T ports against standard open or closed	–Y
	Special version	-S

● = Available ❍ = On request – = Not available ▲ = Not for new projects ▭ = Preferred program

2) Fastening thread or threaded ports, metric
3) Threaded ports at the sides (sizes 10 to 63) plugged with threaded plugs
4) Please contact us.
5) Note the restrictions on page 39.
6) Specify ordering code of counterbalance valve according to data sheet (BVD – RE 95522, BVE – RE 95525) separately.
7) Specify ordering code of sensor according to data sheet (DSA – RE 95133, HDD – RE 95135) separately and observe the requirements on the electronics

Technical data

Hydraulic fluid

Before starting project planning, please refer to our data sheets RE 90220 (mineral oil), RE 90221 (environmentally acceptable hydraulic fluids), RE 90222 (HFD hydraulic fluids) and RE 90223 (HFA, HFB, HFC hydraulic fluids) for detailed information regarding the choice of hydraulic fluid and application conditions.

The fixed motor A2FM is not suitable for operation with HFA hydraulic fluid. If HFB, HFC or HFD or environmentally acceptable hydraulic fluids are used, the limitations regarding technical data or other seals must be observed.

Selection diagram

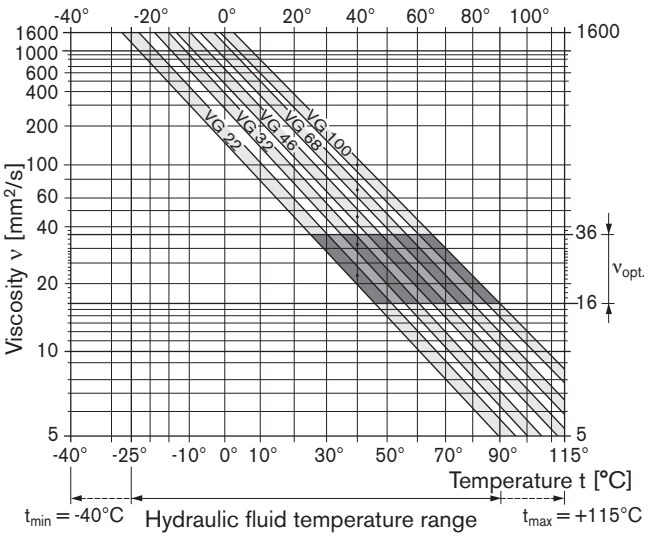

Details regarding the choice of hydraulic fluid

The correct choice of hydraulic fluid requires knowledge of the operating temperature in relation to the ambient temperature: in a closed circuit, the circuit temperature, in an open circuit, the reservoir temperature.

The hydraulic fluid should be chosen so that the operating viscosity in the operating temperature range is within the optimum range (ν_{opt} see shaded area of the selection diagram). We recommended that the higher viscosity class be selected in each case.

Example: At an ambient temperature of X °C, an operating temperature of 60 °C is set in the circuit. In the optimum operating viscosity range ($\nu_{opt.}$, shaded area), this corresponds to the viscosity classes VG 46 or VG 68; to be selected: VG 68.

Note

The case drain temperature, which is affected by pressure and speed, can be higher than the circuit temperature or reservoir temperature. At no point of the component may the temperature be higher than 115 °C. The temperature difference specified below is to be taken into account when determining the viscosity in the bearing.

If the above conditions cannot be maintained due to extreme operating parameters, we recommend flushing the case at port U (sizes 250 to 1000) or using a flushing and boost pressure valve (see pages 34).

Viscosity and temperature of hydraulic fluid

	Viscosity [mm²/s]	Temperature	Comment
Transport and storage at ambient temperature		$T_{min} \geq$ -50 °C T_{opt} = +5 °C to +20 °C	factory preservation: up to 12 months with standard, up to 24 months with long-term
(Cold) start-up[1]	ν_{max} = 1600	$T_{St} \geq$ -40 °C	t ≤ 3 min, without load (p ≤ 50 bar), n ≤ 1000 rpm (for sizes 5 to 200), n ≤ 0.25 • n_{nom} (for sizes 250 to 1000)
Permissible temperature difference		ΔT ≤ 25 K	between axial piston unit and hydraulic fluid
Warm-up phase	ν < 1600 to 400	T = -40 °C to -25 °C	at p ≤ 0.7 • p_{nom}, n ≤ 0.5 • n_{nom} and t ≤ 15 min
Operating phase			
Temperature difference		ΔT = approx. 12 K	between hydraulic fluid in the bearing and at port T.
Maximum temperature		115 °C	in the bearing
		103 °C	measured at port T
Continuous operation	ν = 400 to 10 ν_{opt} = 36 to 16	T = -25 °C to +90 °C	measured at port T, no restriction within the permissible data
Short-term operation[2]	$\nu_{min} \geq$ 7	T_{max} = +103 °C	measured at port T, t < 3 min, p < 0.3 • p_{nom}
FKM shaft seal[1]		T ≤ +115 °C	see page 5

1) At temperatures below -25 °C, an NBR shaft seal is required (permissible temperature range: -40 °C to +90 °C).
2) Sizes 250 to 1000, please contact us.

Technical data

Filtration of the hydraulic fluid

Finer filtration improves the cleanliness level of the hydraulic fluid, which increases the service life of the axial piston unit.

To ensure the functional reliability of the axial piston unit, a gravimetric analysis of the hydraulic fluid is necessary to determine the amount of solid contaminant and to determine the cleanliness level according to ISO 4406. A cleanliness level of at least 20/18/15 is to be maintained.

At very high hydraulic fluid temperatures (90 °C to maximum 115 °C), a cleanliness level of at least 19/17/14 according to ISO 4406 is necessary.

If the above classes cannot be achieved, please contact us.

Shaft seal

Permissible pressure loading

The service life of the shaft seal is influenced by the speed of the axial piston unit and the case drain pressure (case pressure). The mean differential pressure of 2 bar between the case and the ambient pressure may not be enduringly exceeded at normal operating temperature. For a higher differential pressure at reduced speed, see diagram. Momentary pressure spikes ($t < 0.1$ s) of up to 10 bar are permitted. The service life of the shaft seal decreases with an increase in the frequency of pressure spikes.

The case pressure must be equal to or higher than the ambient pressure.

Sizes 10 to 200

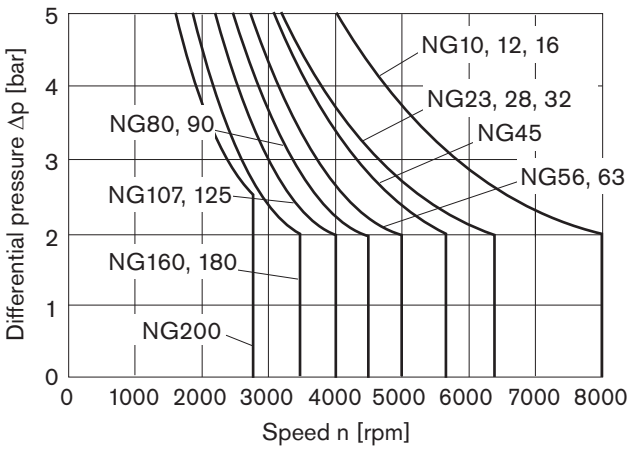

Sizes 250 to 1000

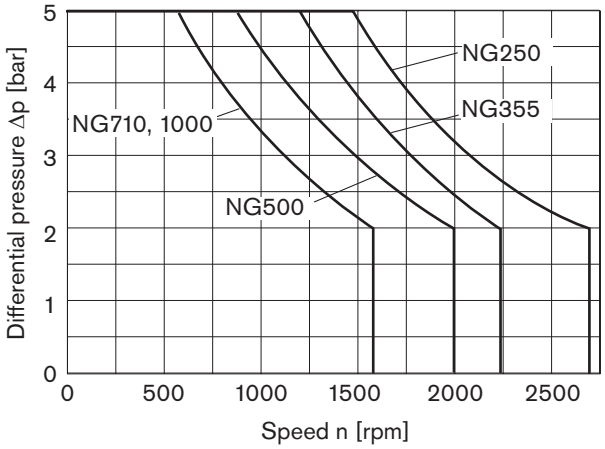

The values are valid for an ambient pressure $p_{abs} = 1$ bar.

Temperature range

The FKM shaft seal may be used for case drain temperatures from -25 °C to +115 °C.

Note
For application cases below -25 °C, an NBR shaft seal is required (permissible temperature range: -40 °C to +90 °C). State NBR shaft seal in plain text when ordering.
Please contact us.

Direction of flow

Direction of rotation, viewed on drive shaft	
clockwise	**counter-clockwise**
A to **B**	**B** to **A**

Speed range

No limit to minimum speed n_{min}. If uniformity of motion is required, speed n_{min} must not be less than 50 rpm. See table of values on page 7 for maximum speed.

Long-life bearing

Sizes 250 to 1000
For long service life and use with HF hydraulic fluids. Identical external dimensions as motor with standard bearings. Subsequent conversion to long-life bearings is possible. Bearing and case flushing via port U is recommended.

Flushing flow (recommended)

NG	250	355	500	710	1000
$q_{v\ flush}$ (L/min)	10	16	16	16	16

Technical data

Operating pressure range
(operating with mineral oil)

Pressure at service line port A or B

Size 5

Nominal pressure p_{nom} _____ 315 bar absolute

Maximum pressure p_{max} _____ 350 bar absolute
Single operating period _____ 10 s
Total operating period _____ 300 h

Summation pressure (pressure A + pressure B) p_{Su} 630 bar

Sizes 10 to 200

Nominal pressure p_{nom} _____ 400 bar absolute

Maximum pressure p_{max} _____ 450 bar absolute
Single operating period _____ 10 s
Total operating period _____ 300 h

Summation pressure (pressure A + pressure B) p_{Su} _ 700 bar

Sizes 250 to 1000

Nominal pressure p_{nom} _____ 350 bar absolute

Maximum pressure p_{max} _____ 400 bar absolute
Single operating period _____ 10 s
Total operating period _____ 300 h

Summation pressure (pressure A + pressure B) p_{Su} _ 700 bar

Minimum pressure (high-pressure side) ___25 bar absolute

Rate of pressure change $R_{A\,max}$
with integrated pressure-relief valve _____ 9000 bar/s
without pressure-relief valve _____ 16000 bar/s

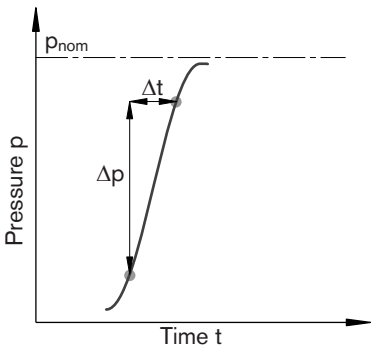

Note
Values for other hydraulic fluids, please contact us.

Minimum pressure – pump mode (inlet)
To prevent damage to the axial piston motor in pump operating mode (change of high-pressure side with unchanged direction of rotation, e. g. when braking), a minimum pressure must be guaranteed at the service line port (inlet). The minimum pressure depends on the speed of the axial piston unit (see characteristic curve below).

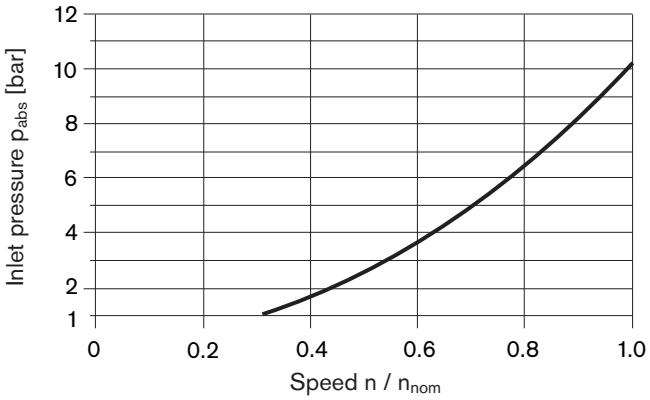

This diagram is valid only for the optimum viscosity range from $\nu_{opt} = 36$ to 16 mm²/s.
Please contact us if these conditions cannot be satisfied.

Definition

Nominal pressure p_{nom}
The nominal pressure corresponds to the maximum design pressure.

Maximum pressure p_{max}
The maximum pressure corresponds to the maximum operating pressure within the single operating period. The sum of the single operating periods must not exceed the total operating period.

Minimum pressure (high-pressure side)
Minimum pressure at the high-pressure side (A or B) which is required in order to prevent damage to the axial piston unit.

Summation pressure p_{Su}
The summation pressure is the sum of the pressures at both service line ports (A and B).

Rate of pressure change R_A
Maximum permissible rate of pressure rise and reduction during a pressure change over the entire pressure range.

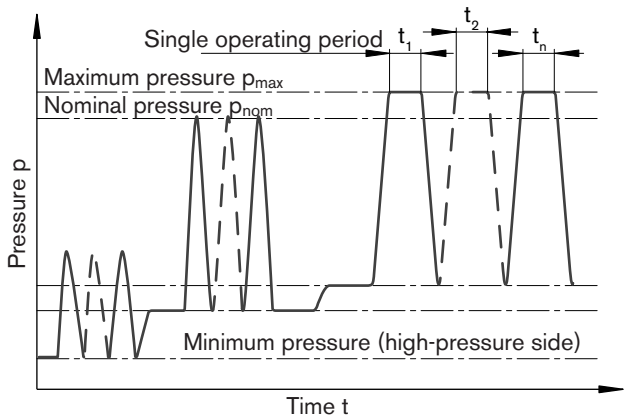

Total operating period = $t_1 + t_2 + \ldots + t_n$

Technical data

Table of values (theoretical values, without efficiency and tolerances; values rounded)

Size	NG		5	10	12	16	23	28	32	45	56	63	80
Displacement geometric, per revolution	V_g	cm^3	4.93	10.3	12	16	22.9	28.1	32	45.6	56.1	63	80.4
Speed maximum[1]	n_{nom}	rpm	10000	8000	8000	8000	6300	6300	6300	5600	5000	5000	4500
	n_{max}[2]	rpm	11000	8800	8800	8800	6900	6900	6900	6200	5500	5500	5000
Input flow[3]													
at n_{nom} and V_g	q_V	L/min	49	82	96	128	144	177	202	255	281	315	362
Torque[4]													
at V_g and $\Delta p = 350$ bar	T	Nm	24.7[5]	57	67	89	128	157	178	254	313	351	448
$\Delta p = 400$ bar	T	Nm	–	66	76	102	146	179	204	290	357	401	512
Rotary stiffness	c	kNm/rad	0.63	0.92	1.25	1.59	2.56	2.93	3.12	4.18	5.94	6.25	8.73
Moment of inertia for rotary group	J_{GR}	kgm^2	0.00006	0.0004	0.0004	0.0004	0.0012	0.0012	0.0012	0.0024	0.0042	0.0042	0.0072
Maximum angular acceleration	α	rad/s^2	5000	5000	5000	5000	6500	6500	6500	14600	7500	7500	6000
Case volume	V	L		0.17	0.17	0.17	0.20	0.20	0.20	0.33	0.45	0.45	0.55
Mass (approx.)	m	kg	2.5	5.4	5.4	5.4	9.5	9.5	9.5	13.5	18	18	23

Size	NG		90	107	125	160	180	200	250	355	500	710	1000
Displacement geometric, per revolution	V_g	cm^3	90	106.7	125	160.4	180	200	250	355	500	710	1000
Speed maximum[1]	n_{nom}	rpm	4500	4000	4000	3600	3600	2750	2700	2240	2000	1600	1600
	n_{max}[2]	rpm	5000	4400	4400	4000	4000	3000	–	–	–	–	–
Input flow[3]													
at n_{nom} and V_g	q_V	L/min	405	427	500	577	648	550	675	795	1000	1136	1600
Torque[4]													
at V_g and $\Delta p = 350$ bar	T	Nm	501	594	696	893	1003	1114	1393	1978	2785	3955	5570
$\Delta p = 400$ bar	T	Nm	573	679	796	1021	1146	1273	–	–	–	–	–
Rotary stiffness	c	kNm/rad	9.14	11.2	11.9	17.4	18.2	57.3	73.1	96.1	144	270	324
Moment of inertia for rotary group	J_{GR}	kgm^2	0.0072	0.0116	0.0116	0.0220	0.0220	0.0353	0.061	0.102	0.178	0.55	0.55
Maximum angular acceleration	α	rad/s^2	6000	4500	4500	3500	3500	11000	10000	8300	5500	4300	4500
Case volume	V	L	0.55	0.8	0.8	1.1	1.1	2.7	2.5	3.5	4.2	8	8
Mass (approx.)	m	kg	23	32	32	45	45	66	73	110	155	325	336

1) The values are valid:
- for the optimum viscosity range from $\nu_{opt} = 36$ to 16 mm^2/s
- with hydraulic fluid based on mineral oils

2) Intermittent maximum speed: overspeed for unload and overhauling processes, $t < 5$ s and $\Delta p < 150$ bar

3) Restriction of input flow with counterbalance valve, see page 39

4) Torque without radial force, with radial force see page 8

5) Torque at $\Delta p = 315$ bar

Note

Operation above the maximum values or below the minimum values may result in a loss of function, a reduced service life or in the destruction of the axial piston unit. Other permissible limit values, with respect to speed variation, reduced angular acceleration as a function of the frequency and the permissible start up angular acceleration (lower than the maximum angular acceleration) can be found in data sheet RE 90261.

Technical data

Permissible radial and axial forces of the drive shafts

(splined shaft and parallel keyed shaft)

Size	NG		5	5[3]	10	10	12	12	16	23	23
Drive shaft	ø	mm	12	12	20	25	20	25	25	25	30
Maximum radial force[1] at distance a (from shaft collar) 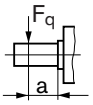	$F_{q\ max}$	kN	1.6	1.6	3.0	3.2	3.0	3.2	3.2	5.7	5.4
	a	mm	12	12	16	16	16	16	16	16	16
with permissible torque	T_{max}	Nm	24.7	24.7	66	66	76	76	102	146	146
≙ permissible pressure Δp	Δp_{perm}	bar	315	315	400	400	400	400	400	400	400
Maximum axial force[2] 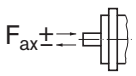	$+F_{ax\ max}$	N	180	180	320	320	320	320	320	500	500
	$-F_{ax\ max}$	N	0	0	0	0	0	0	0	0	0
Permissible axial force per bar operating pressure	$\pm F_{ax\ perm/bar}$	N/bar	1.5	1.5	3.0	3.0	3.0	3.0	3.0	5.2	5.2

Size	NG		28	28	32	45	56	56[4]	56	63	80
Drive shaft	ø	mm	25	30	30	30	30	30	35	35	35
Maximum radial force[1] at distance a (from shaft collar) 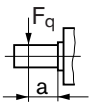	$F_{q\ max}$	kN	5.7	5.4	5.4	7.6	9.5	7.8	9.1	9.1	11.6
	a	mm	16	16	16	18	18	18	18	18	20
with permissible torque	T_{max}	Nm	179	179	204	290	357	294	357	401	512
≙ permissible pressure Δp	Δp_{perm}	bar	400	400	400	400	400	330	400	400	400
Maximum axial force[2] 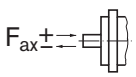	$+F_{ax\ max}$	N	500	500	500	630	800	800	800	800	1000
	$-F_{ax\ max}$	N	0	0	0	0	0	0	0	0	0
Permissible axial force per bar operating pressure	$\pm F_{ax\ perm/bar}$	N/bar	5.2	5.2	5.2	7.0	8.7	8.7	8.7	8.7	10.6

Size	NG		80[4]	80	90	107	107	125	160	160	180
Drive shaft	ø	mm	35	40	40	40	45	45	45	50	50
Maximum radial force[1] at distance a (from shaft collar) 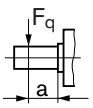	$F_{q\ max}$	kN	11.1	11.4	11.4	13.6	14.1	14.1	18.1	18.3	18.3
	a	mm	20	20	20	20	20	20	25	25	25
with permissible torque	T_{max}	Nm	488	512	573	679	679	796	1021	1021	1146
≙ permissible pressure Δp	Δp_{perm}	bar	380	400	400	400	400	400	400	400	400
Maximum axial force[2] 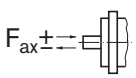	$+F_{ax\ max}$	N	1000	1000	1000	1250	1250	1250	1600	1600	1600
	$-F_{ax\ max}$	N	0	0	0	0	0	0	0	0	0
Permissible axial force per bar operating pressure	$\pm F_{ax\ perm/bar}$	N/bar	10.6	10.6	10.6	12.9	12.9	12.9	16.7	16.7	16.7

Size	NG		200	250	355	500	710	1000
Drive shaft	ø	mm	50	50	60	70	90	90
Maximum radial force[1] at distance a (from shaft collar) 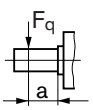	$F_{q\ max}$	kN	20.3	1.2[6]	1.5[6]	1.9[6]	3.0[6]	2.6[6]
	a	mm	25	41	52.5	52.5	67.5	67.5
with permissible torque	T_{max}	Nm	1273	[5]	[5]	[5]	[5]	[5]
≙ permissible pressure Δp	Δp_{perm}	bar	400	[5]	[5]	[5]	[5]	[5]
Maximum axial force[2] 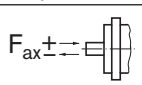	$+F_{ax\ max}$	N	1600	2000	2500	3000	4400	4400
	$-F_{ax\ max}$	N	0	0	0	0	0	0
Permissible axial force per bar operating pressure	$\pm F_{ax\ perm/bar}$	N/bar	16.7	[5]	[5]	[5]	[5]	[5]

1) With intermittent operation
2) Maximum permissible axial force during standstill or when the axial piston unit is operating in non-pressurized condition.
3) Conical shaft with threaded pin and woodruff key (DIN 6888)
4) Restricted technical data only for splined shaft
5) Please contact us.
6) When at a standstill or when axial piston unit operating in non-pressurized conditions. Higher forces are permissible when under pressure, please contact us.

Note

Influence of the direction of the permissible axial force:

$+F_{ax\ max}$ = Increase in service life of bearings

$-F_{ax\ max}$ = Reduction in service life of bearings (avoid)

Technical data

Effect of radial force F_q on the service life of bearings

By selecting a suitable direction of radial force F_q, the load on the bearings, caused by the internal rotary group forces can be reduced, thus optimizing the service life of the bearings. Recommended position of mating gear is dependent on direction of rotation. Examples:

	Toothed gear drive	V-belt output
NG	φ_{opt}	φ_{opt}
5 to 180	± 70°	± 45°
200 to 1000	± 45°	± 70°

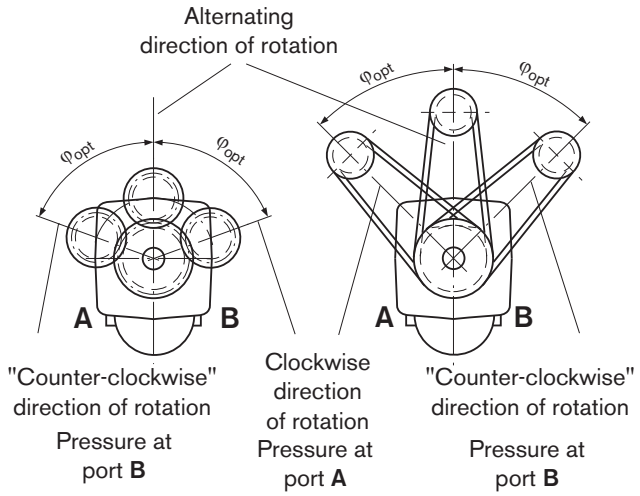

Determining the operating characteristics

Input flow $q_v = \dfrac{V_g \cdot n}{1000 \cdot \eta_v}$ [L/min]

Speed $n = \dfrac{q_V \cdot 1000 \cdot \eta_v}{V_g}$ [min^{-1}]

Torque $T = \dfrac{V_g \cdot \Delta p \cdot \eta_{mh}}{20 \cdot \pi}$ [Nm]

Power $P = \dfrac{2\,\pi \cdot T \cdot n}{60000} = \dfrac{q_v \cdot \Delta p \cdot \eta_t}{600}$ [kW]

V_g = Displacement per revolution in cm^3

Δp = Differential pressure in bar

n = Speed in rpm

η_v = Volumetric efficiency

η_{mh} = Mechanical-hydraulic efficiency

η_t = Total efficiency ($\eta_t = \eta_v \cdot \eta_{mh}$)

Dimensions size 5

Before finalizing your design, request a binding installation drawing. Dimensions in mm.

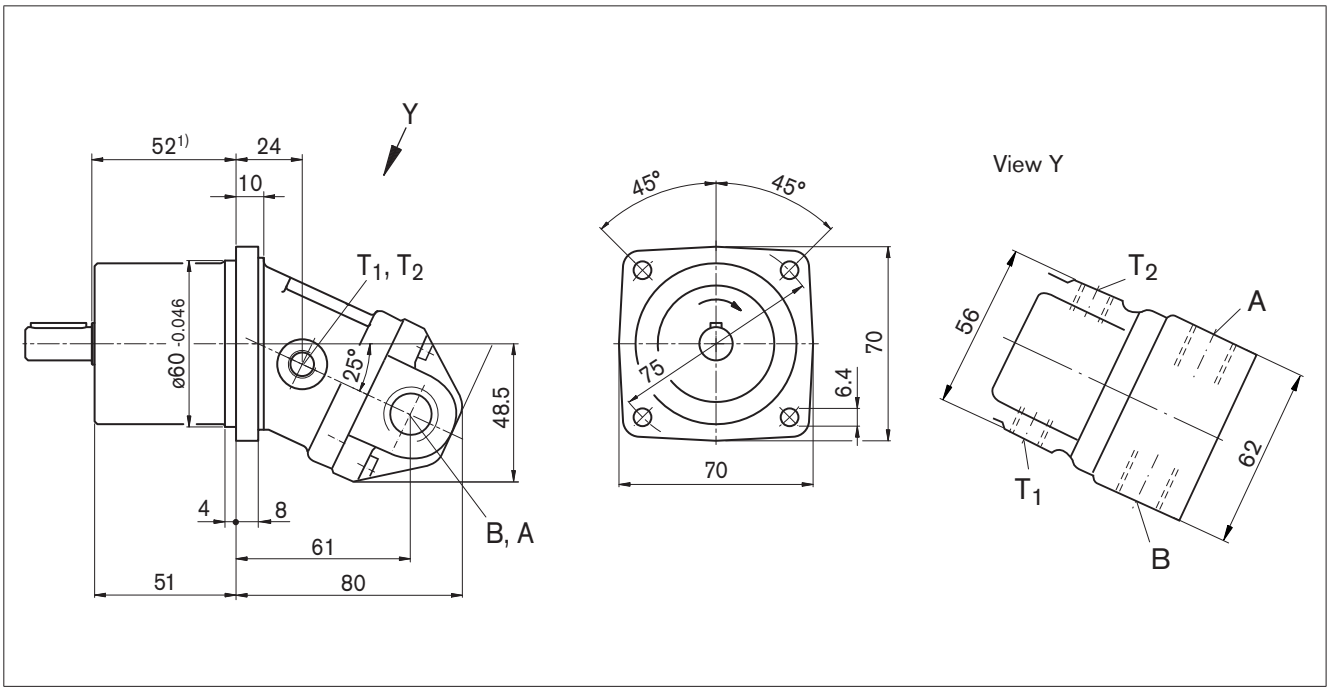

Drive shafts

B Parallel keyed shaft
DIN 6885, A4x4x20

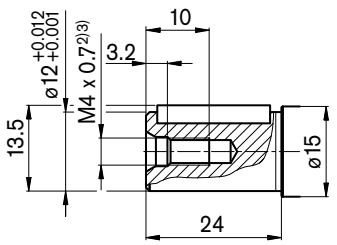

C Conical shaft with threaded pin and woodruff key, 3x5 (DIN 6888), (tapering 1:10)

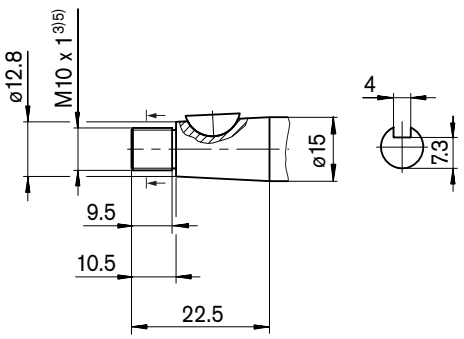

Ports

Designation	Port for	Standard[6)]	Size[3)]	Maximum pressure [bar][4)]	State[7)]
A, B	Service line	DIN 3852	M18 x 1.5; 12 deep	350	O
T_1	Drain line	DIN 3852	M10 x 1; 8 deep	3	O
T_2	Drain line	DIN 3852	M10 x 1; 8 deep	3	O

1) To shaft collar
2) Center bore according to DIN 332 (thread according to DIN 13)
3) Observe the general instructions on page 46 for the maximum tightening torques.
4) Momentary pressure spikes may occur depending on the application. Keep this in mind when selecting measuring devices and fittings.
5) Thread according to DIN 3852, maximum tightening torque: 30 Nm
6) The spot face can be deeper than specified in the appropriate standard.
7) O = Must be connected (plugged on delivery)

Dimensions sizes 10, 12, 16

Before finalizing your design, request a binding installation drawing. Dimensions in mm.

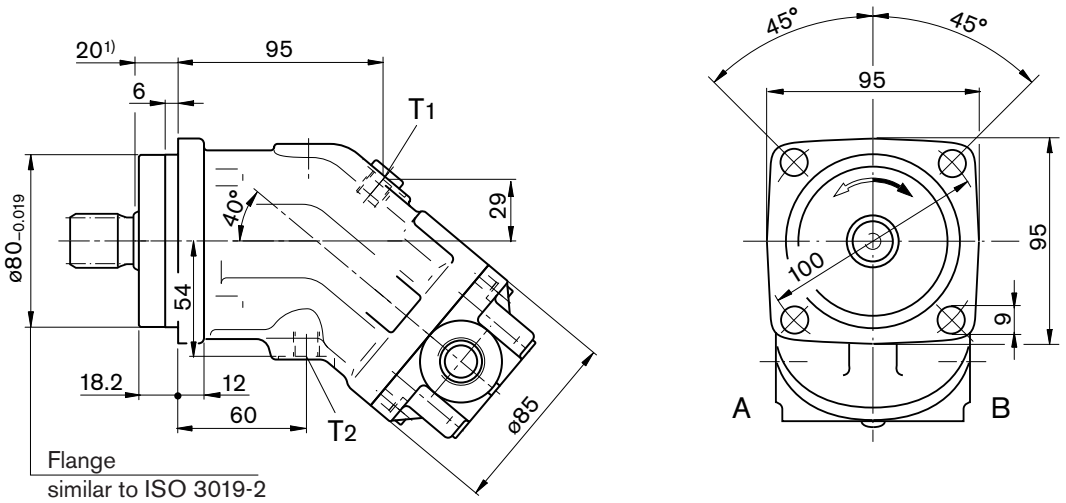

Drive shafts

Sizes 10, 12, 16

A Splined shaft DIN 5480 W25x1.25x18x9g

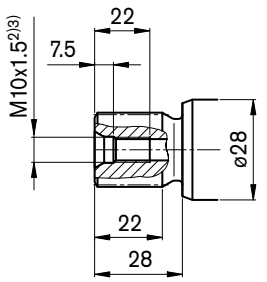

Sizes 10, 12

Z Splined shaft DIN 5480 W20x1.25x14x9g

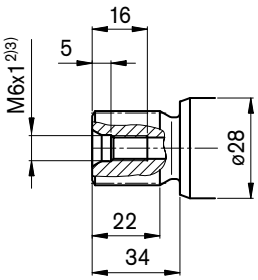

Sizes 10, 12, 16

B Parallel keyed shaft DIN 6885, AS8x7x32

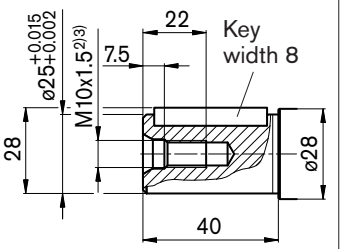

Sizes 10, 12

P Parallel keyed shaft DIN 6885, AS6x6x32

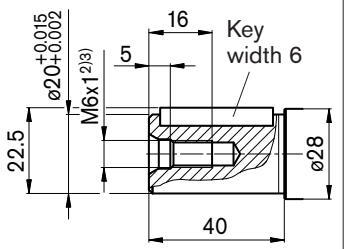

Ports

Designation	Port for	Standard	Size[3)]	Maximum pressure [bar][4)]	State[7)]
A, B	Service line (see port plates)			450	
T_1	Drain line	DIN 3852[6)]	M12 x 1.5; 12 deep	3	X[5)]
T_2	Drain line	DIN 3852[6)]	M12 x 1.5; 12 deep	3	O[5)]

1) To shaft collar
2) Center bore according to DIN 332 (thread according to DIN 13)
3) Observe the general instructions on page 46 for the maximum tightening torques.
4) Momentary pressure spikes may occur depending on the application. Keep this in mind when selecting measuring devices and fittings.
5) Depending on installation position, T_1 or T_2 must be connected (see also installation instructions on page 44).
6) The spot face can be deeper than specified in the appropriate standard.
7) O = Must be connected (plugged on delivery)
X = Plugged (in normal operation)

Dimensions sizes 10, 12, 16

Before finalizing your design, request a binding installation drawing. Dimensions in mm.

Location of the service line ports on the port plates

03 – Threaded ports at side, opposite

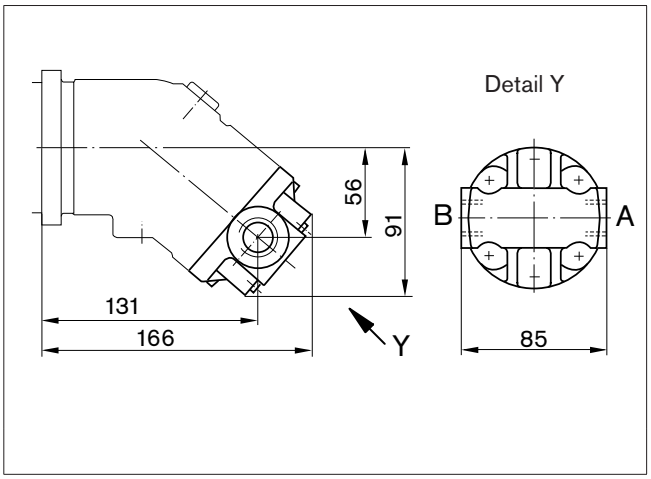

04 – Threaded ports at side and rear

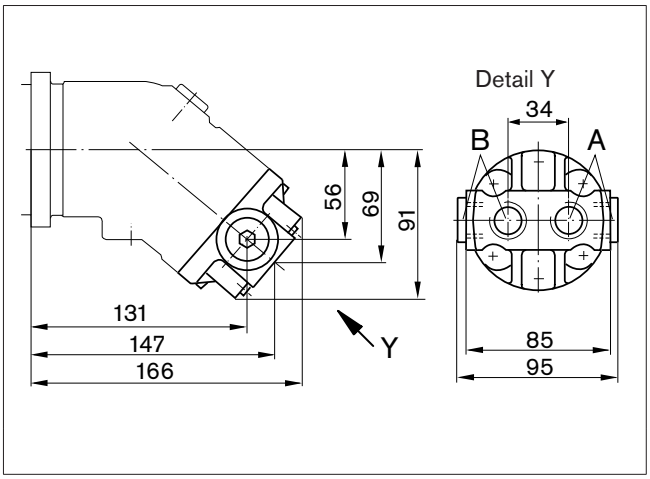

Plate	Designation	Port for	Standard[3]	Size[1]	Maximum pressure [bar][2]	State[4]
03	A, B	Service line	DIN 3852	M22 x 1.5; 14 deep	450	O
04		Service line	DIN 3852	M22 x 1.5; 14 deep	450	1x O each

1) Observe the general instructions on page 46 for the maximum tightening torques
2) Momentary pressure spikes may occur depending on the application. Keep this in mind when selecting measuring devices and fittings.
3) The spot face can be deeper than specified in the appropriate standard.
4) O = Must be connected (plugged on delivery)

Dimensions sizes 23, 28, 32

Before finalizing your design, request a binding installation drawing. Dimensions in mm.

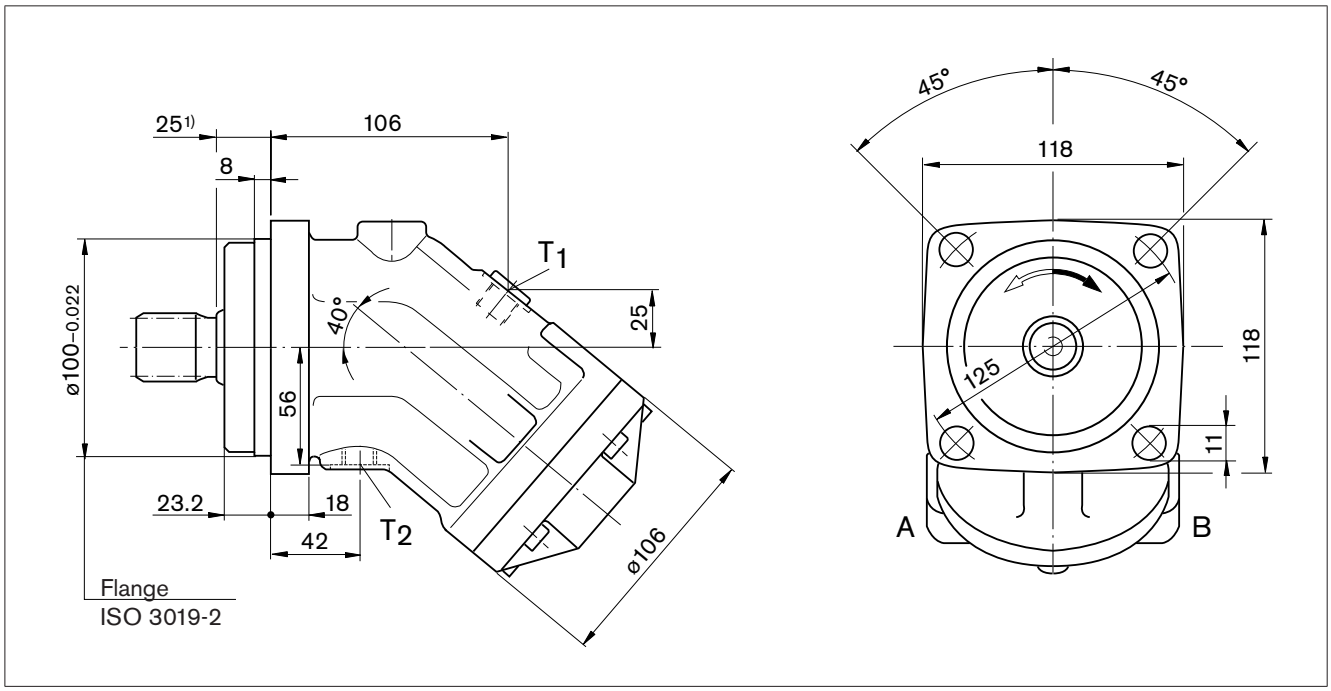

Drive shafts

Sizes 23, 28, 32

A Splined shaft DIN 5480 W30x2x14x9g

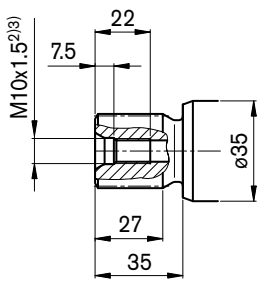

Sizes 23, 28

Z Splined shaft DIN 5480 W25x1.25x18x9g

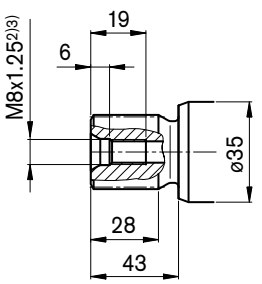

Sizes 23, 28, 32

B Parallel keyed shaft DIN 6885, AS8x7x40

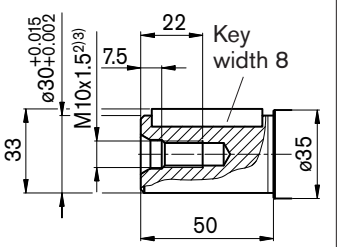

Sizes 23, 28

P Parallel keyed shaft DIN 6885, AS8x7x40

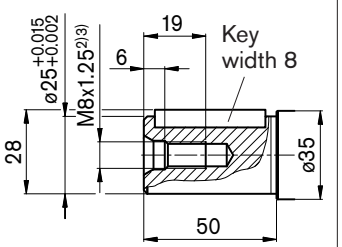

Ports

Designation	Port for	Standard	Size[3]	Maximum pressure [bar][4]	State[7]
A, B	Service line (see port plates)			450	
T_1	Drain line	DIN 3852[6]	M16 x 1.5; 12 deep	3	X[5]
T_2	Drain line	DIN 3852[6]	M16 x 1.5; 12 deep	3	O[5]

1) To shaft collar
2) Center bore according to DIN 332 (thread according to DIN 13)
3) Observe the general instructions on page 46 for the maximum tightening torques.
4) Momentary pressure spikes may occur depending on the application. Keep this in mind when selecting measuring devices and fittings.
5) Depending on installation position, T_1 or T_2 must be connected (see also installation instructions on page 44).
6) The spot face can be deeper than specified in the appropriate standard.
7) O = Must be connected (plugged on delivery)
X = Plugged (in normal operation)

Dimensions sizes 23, 28, 32

Before finalizing your design, request a binding installation drawing. Dimensions in mm.

Location of the service line ports on the port plates

01 – SAE flange ports at rear

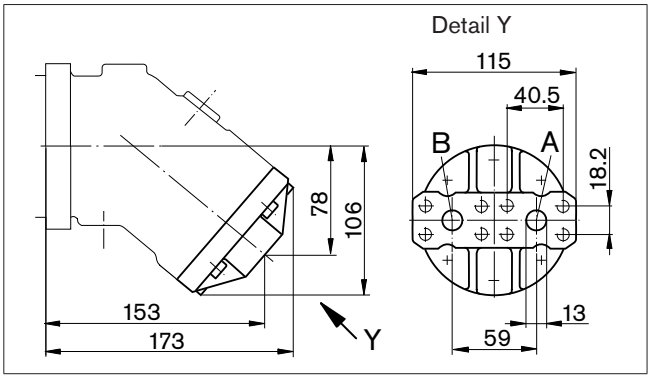

02 – SAE flange ports at side, opposite

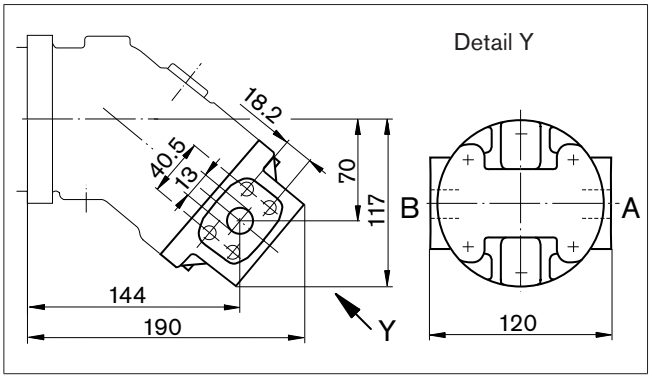

03 – Threaded ports at side, opposite

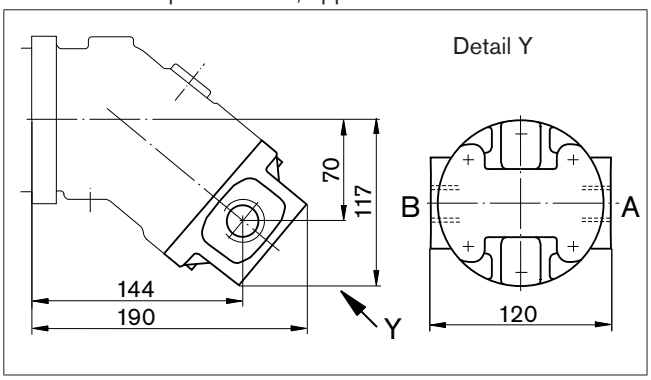

04 – Threaded ports at side and rear

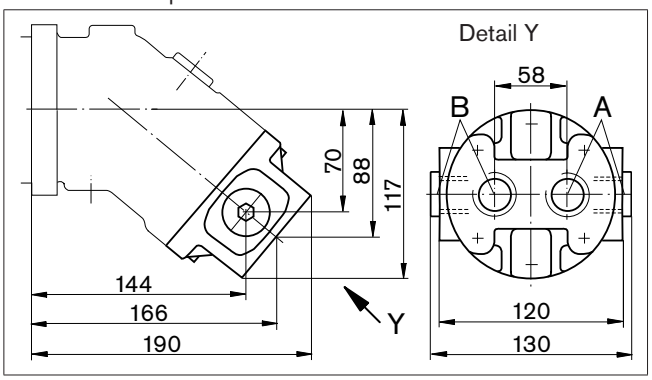

10 – SAE flange ports at bottom (same side)[4]

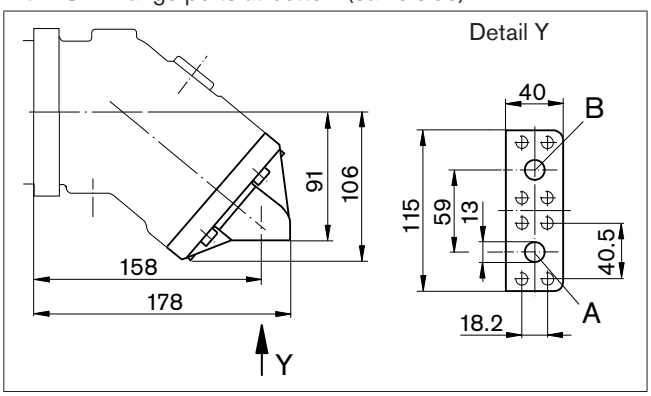

Plate	Designation	Port for	Standard	Size[1]	Maximum pressure [bar][2]	State[6]
01, 02, 10	A, B	Service line Fastening thread A/B	SAE J518[3] DIN 13	1/2 in M8 x 1.25; 15 deep	450	O
03		Service line	DIN 3852[5]	M27 x 2; 16 deep	450	O
04		Service line	DIN 3852[5]	M27 x 2; 16 deep	450	1x O each

1) Observe the general instructions on page 46 for the maximum tightening torques
2) Momentary pressure spikes may occur depending on the application. Keep this in mind when selecting measuring devices and fittings.
3) Only dimensions according to SAE J518, metric fastening thread is a deviation from standard
4) Only sizes 28 and 32
5) The spot face can be deeper than specified in the appropriate standard.
6) O = Must be connected (plugged on delivery)

Note

Port plates 18 and 19: see pages 37 and 40

Dimensions size 45

Before finalizing your design, request a binding installation drawing. Dimensions in mm.

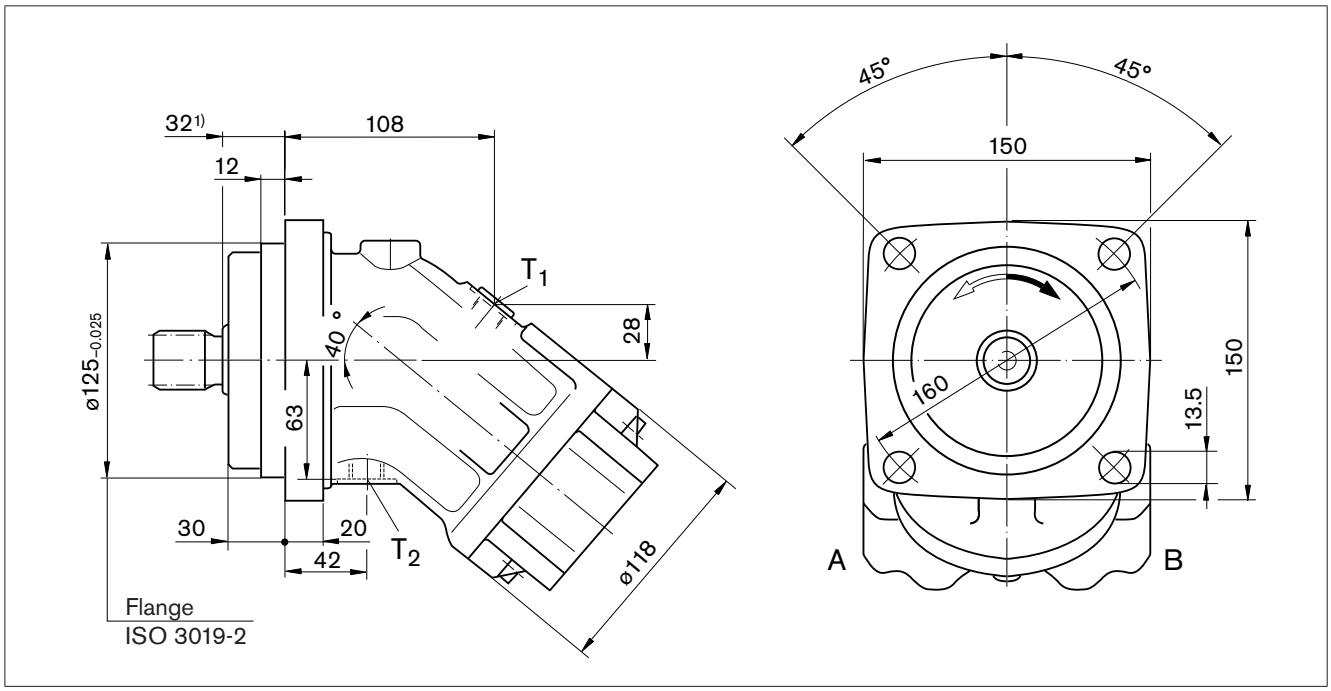

Drive shafts

Z Splined shaft DIN 5480
W30x2x14x9g

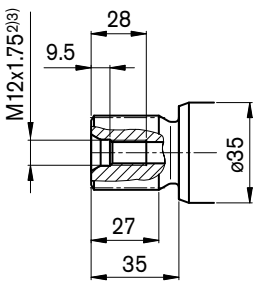

P Parallel keyed shaft
DIN 6885, AS8x7x50

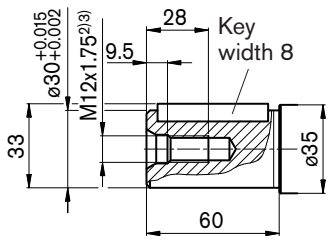

Ports

Designation	Port for	Standard	Size[3)]	Maximum pressure [bar][4)]	State[7)]
A, B	Service line (see port plates)			450	
T_1	Drain line	DIN 3852[6)]	M18 x 1.5; 12 deep	3	X[5)]
T_2	Drain line	DIN 3852[6)]	M18 x 1.5; 12 deep	3	O[5)]

1) To shaft collar
2) Center bore according to DIN 332 (thread according to DIN 13)
3) Observe the general instructions on page 46 for the maximum tightening torques.
4) Momentary pressure spikes may occur depending on the application. Keep this in mind when selecting measuring devices and fittings.
5) Depending on installation position, T_1 or T_2 must be connected (see also installation instructions on page 44).
6) The spot face can be deeper than specified in the appropriate standard.
7) O = Must be connected (plugged on delivery)
X = Plugged (in normal operation)

Dimensions size 45

Before finalizing your design, request a binding installation drawing. Dimensions in mm.

Location of the service line ports on the port plates

01 – SAE flange ports at rear

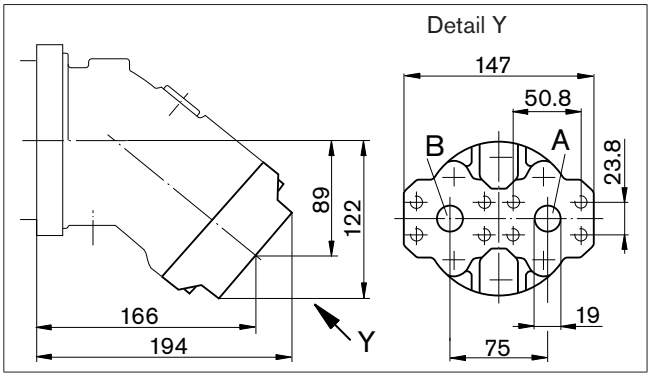

02 – SAE flange ports at side, opposite

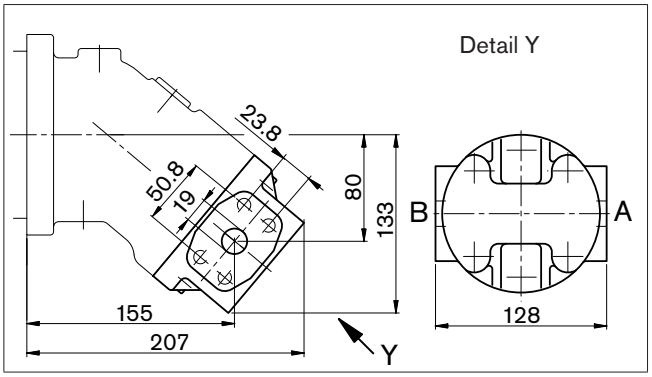

04 – Threaded ports at side and rear

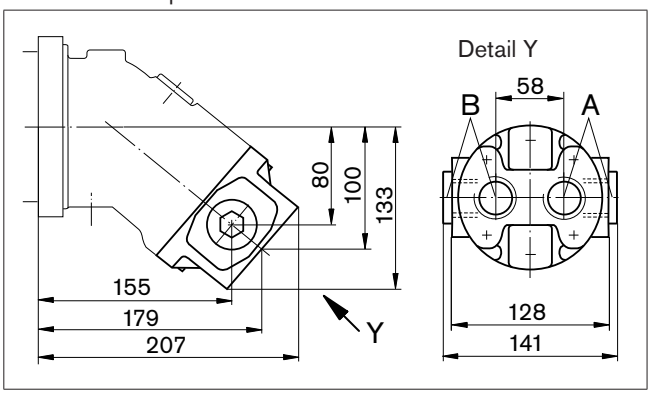

10 – SAE flange ports at bottom (same side)

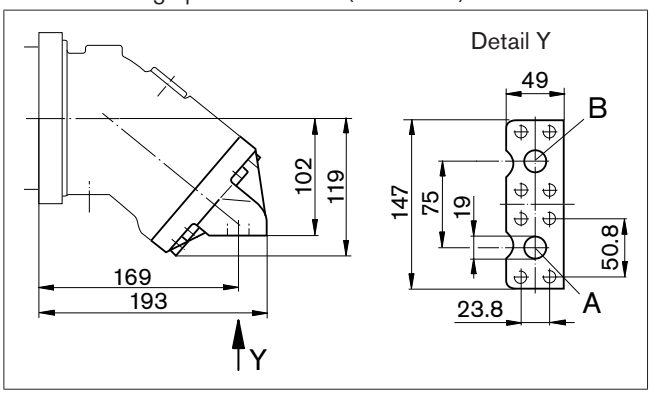

Plate	Designation	Port for	Standard	Size[1]	Maximum pressure [bar][2]	State[5]
01, 02, 10	A, B	Service line Fastening thread A/B	SAE J518[3] DIN 13	3/4 in M10 x 1.5; 17 deep	450	O
04		Service line	DIN 3852[4]	M33 x 2; 18 deep	450	1x O each

1) Observe the general instructions on page 46 for the maximum tightening torques
2) Momentary pressure spikes may occur depending on the application. Keep this in mind when selecting measuring devices and fittings.
3) Only dimensions according to SAE J518, metric fastening thread is a deviation from standard.
4) The spot face can be deeper than specified in the appropriate standard.
5) O = Must be connected (plugged on delivery)

Note
Port plates 18 and 19: see pages 37 and 40

Dimensions sizes 56, 63

Before finalizing your design, request a binding installation drawing. Dimensions in mm.

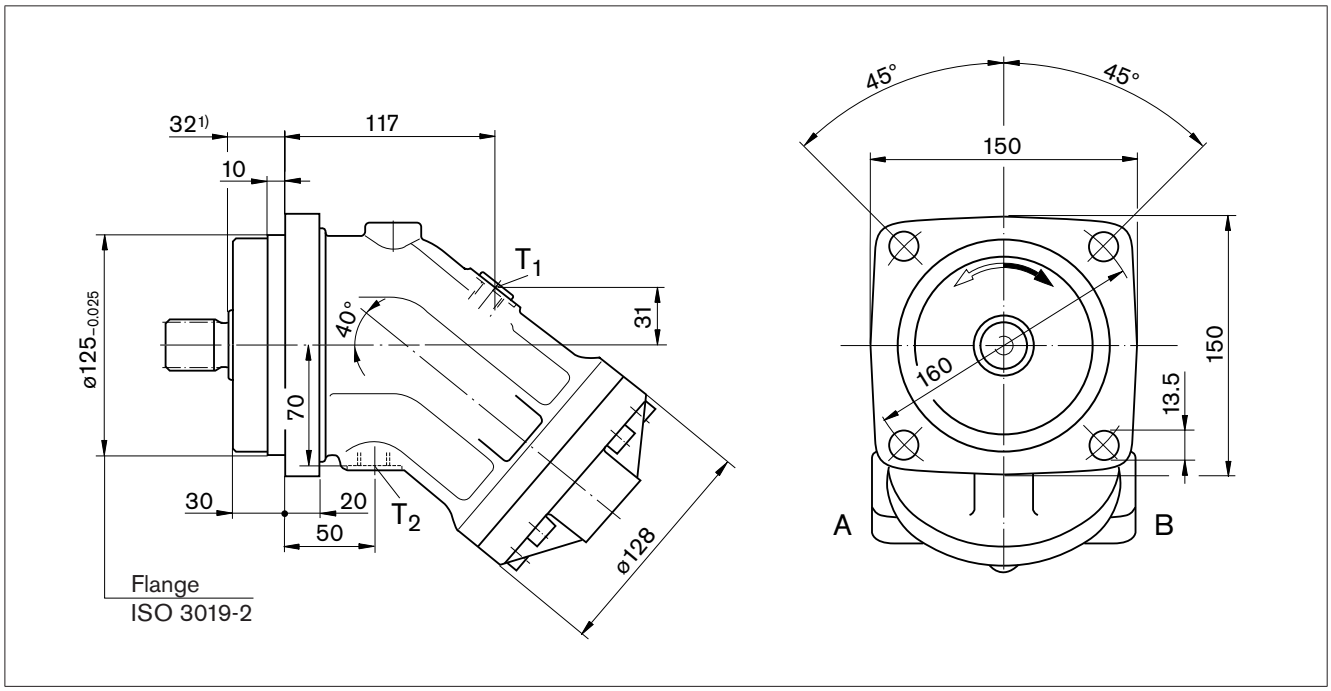

Drive shafts

NG56, 63

A Splined shaft DIN 5480
W35x2x16x9g

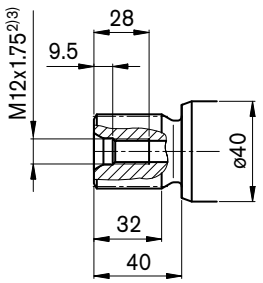

NG56

Z Splined shaft DIN 5480
W30x2x14x9g

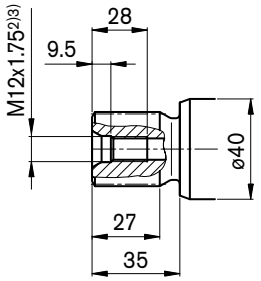

NG56, 63

B Parallel keyed shaft
DIN 6885, AS10x8x50

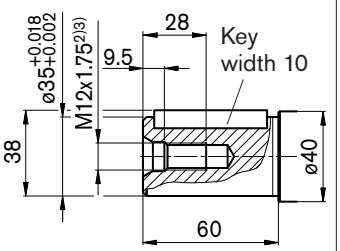

NG56

P Parallel keyed shaft
DIN 6885, AS8x7x50

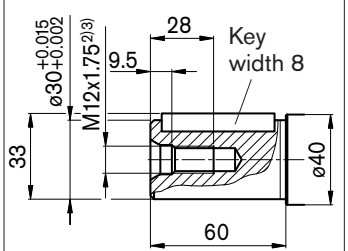

Ports

Designation	Port for	Standard	Size[3]	Maximum pressure [bar][4]	State[7]
A, B	Service line (see port plates)			450	
T_1	Drain line	DIN 3852[6]	M18 x 1.5; 12 deep	3	X[5]
T_2	Drain line	DIN 3852[6]	M18 x 1.5; 12 deep	3	O[5]

1) To shaft collar
2) Center bore according to DIN 332 (thread according to DIN 13)
3) Observe the general instructions on page 46 for the maximum tightening torques.
4) Momentary pressure spikes may occur depending on the application. Keep this in mind when selecting measuring devices and fittings.
5) Depending on installation position, T_1 or T_2 must be connected (see also installation instructions on page 44).
6) The spot face can be deeper than specified in the appropriate standard.
7) O = Must be connected (plugged on delivery)
X = Plugged (in normal operation)

Dimensions sizes 56, 63

Before finalizing your design, request a binding installation drawing. Dimensions in mm.

Location of the service line ports on the port plates

01 – SAE flange ports at rear

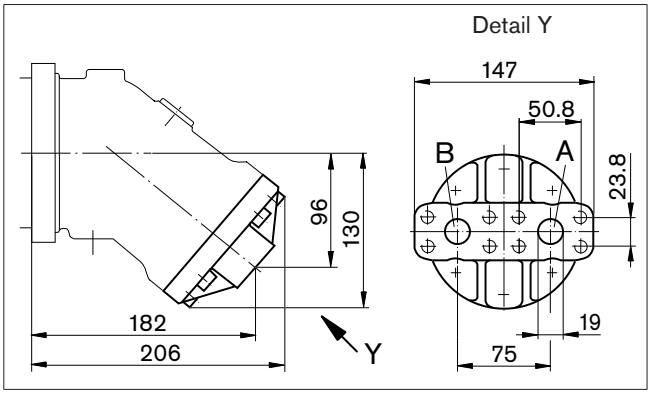

02 – SAE flange ports at side, opposite

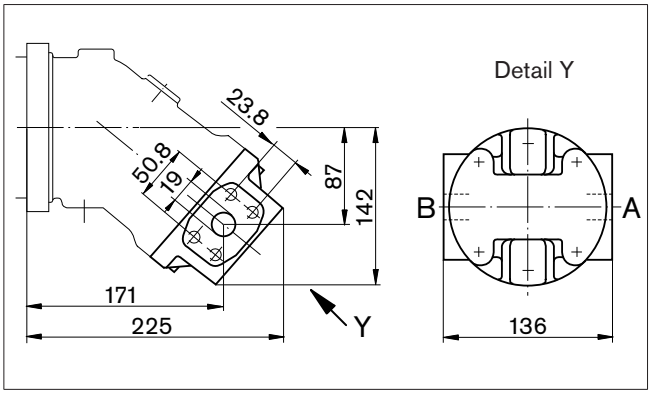

04 – Threaded ports at side and rear

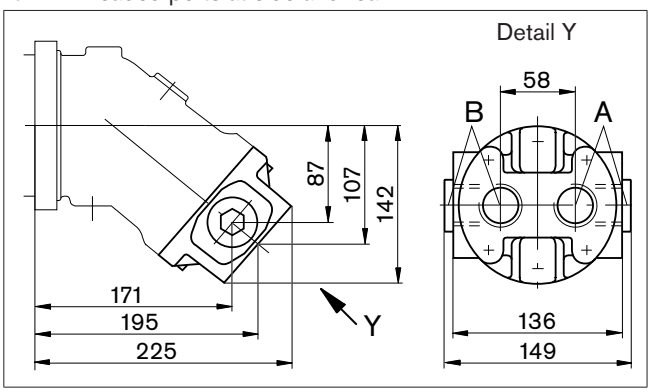

10 – SAE flange ports at bottom (same side)

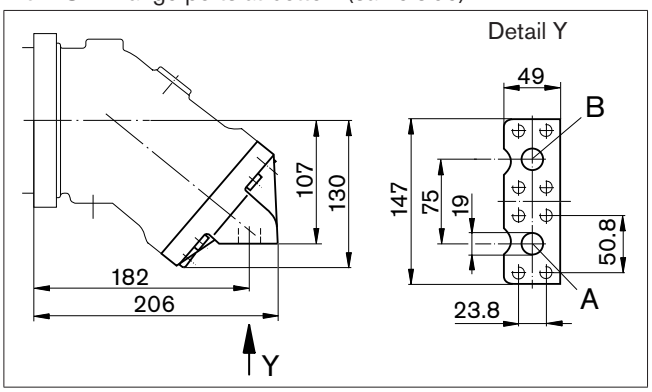

Plate	Designation	Port for	Standard	Size[1]	Maximum pressure [bar][2]	State[5]
01, 02, 10	A, B	Service line Fastening thread A/B	SAE J518[3] DIN 13	3/4 in M10 x 1.5; 17 deep	450	O
04		Service line	DIN 3852[4]	M33 x 2; 18 deep	450	1x O each

1) Observe the general instructions on page 46 for the maximum tightening torques
2) Momentary pressure spikes may occur depending on the application. Keep this in mind when selecting measuring devices and fittings.
3) Only dimensions according to SAE J518, metric fastening thread is a deviation from standard.
4) The spot face can be deeper than specified in the appropriate standard.
5) O = Must be connected (plugged on delivery)

Note
Port plates 18 and 19: see pages 37 and 40

Dimensions sizes 80, 90

Before finalizing your design, request a binding installation drawing. Dimensions in mm.

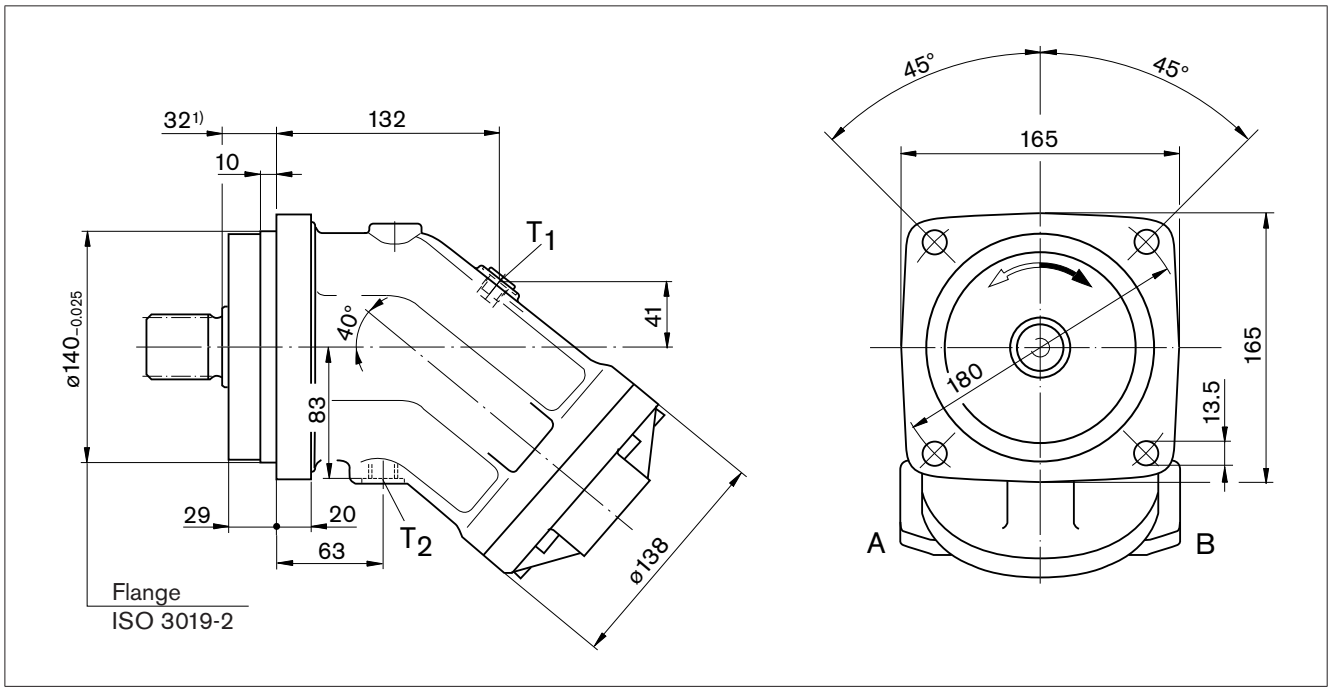

Drive shafts

NG80, 90

A Splined shaft DIN 5480
W40x2x18x9g

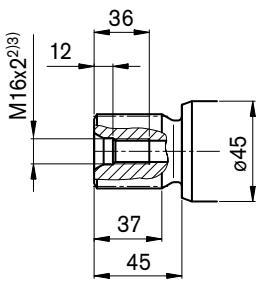

NG80

Z Splined shaft DIN 5480
W35x2x16x9g

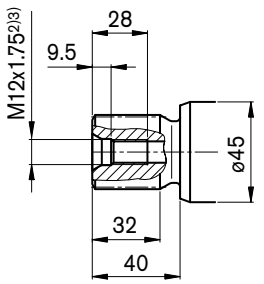

NG80, 90

B Parallel keyed shaft
DIN 6885, AS12x8x56

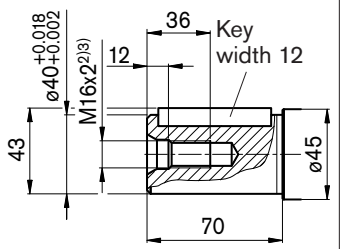

NG80

P Parallel keyed shaft
DIN 6885, AS10x8x56

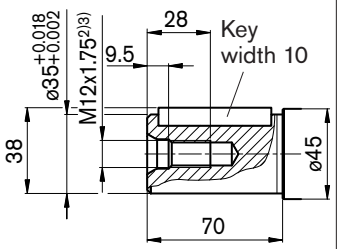

Ports

Designation	Port for	Standard	Size[3)]	Maximum pressure [bar][4)]	State[7)]
A, B	Service line (see port plates)			450	
T_1	Drain line	DIN 3852[6)]	M18 x 1.5; 12 deep	3	X[5)]
T_2	Drain line	DIN 3852[6)]	M18 x 1.5; 12 deep	3	O[5)]

1) To shaft collar
2) Center bore according to DIN 332 (thread according to DIN 13)
3) Observe the general instructions on page 46 for the maximum tightening torques.
4) Momentary pressure spikes may occur depending on the application. Keep this in mind when selecting measuring devices and fittings.
5) Depending on installation position, T_1 or T_2 must be connected (see also installation instructions on page 44).
6) The spot face can be deeper than specified in the appropriate standard.
7) O = Must be connected (plugged on delivery)
X = Plugged (in normal operation)

Dimensions sizes 80, 90

Before finalizing your design, request a binding installation drawing. Dimensions in mm.

Location of the service line ports on the port plates

01 – SAE flange ports at rear

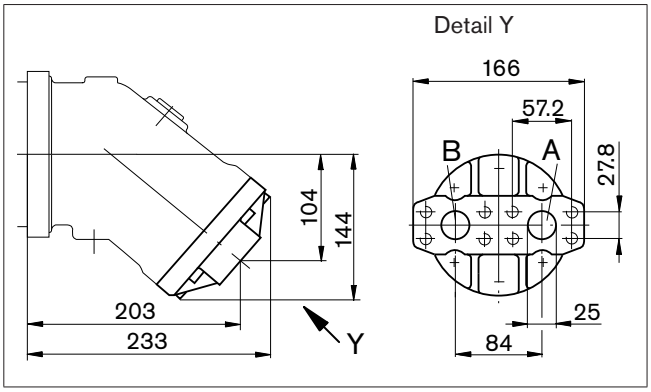

02 – SAE flange ports at side, opposite

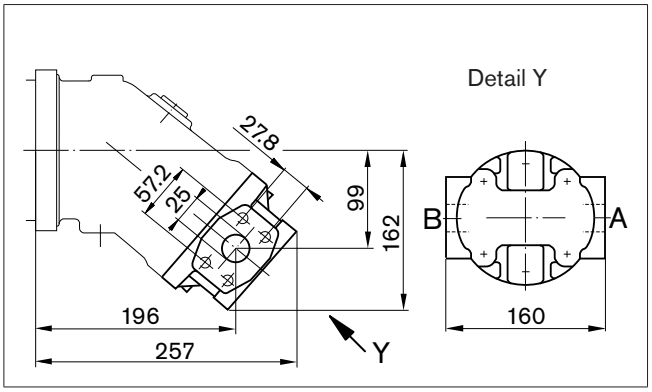

10 – SAE flange ports at bottom (same side)

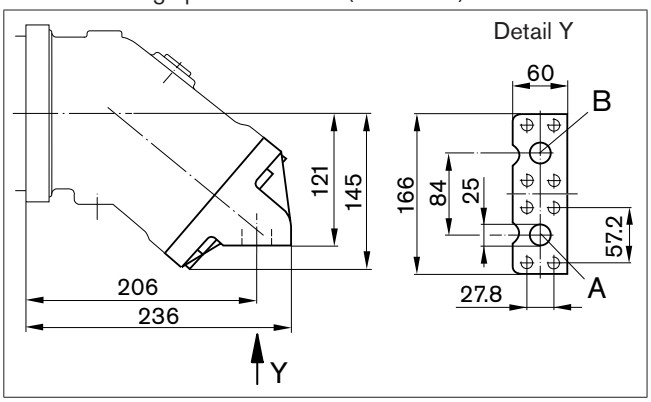

Plate	Designation	Port for	Standard	Size[1]	Maximum pressure [bar][2]	State[4]
01, 02, 10	A, B	Service line Fastening thread A/B	SAE J518[3] DIN 13	1 in M12 x 1.75; 17 deep	450	O

1) Observe the general instructions on page 46 for the maximum tightening torques
2) Momentary pressure spikes may occur depending on the application. Keep this in mind when selecting measuring devices and fittings.
3) Only dimensions according to SAE J518, metric fastening thread is a deviation from standard.
4) O = Must be connected (plugged on delivery)

Note
Port plates 18 and 19: see pages 37 and 40

Dimensions sizes 107, 125

Before finalizing your design, request a binding installation drawing. Dimensions in mm.

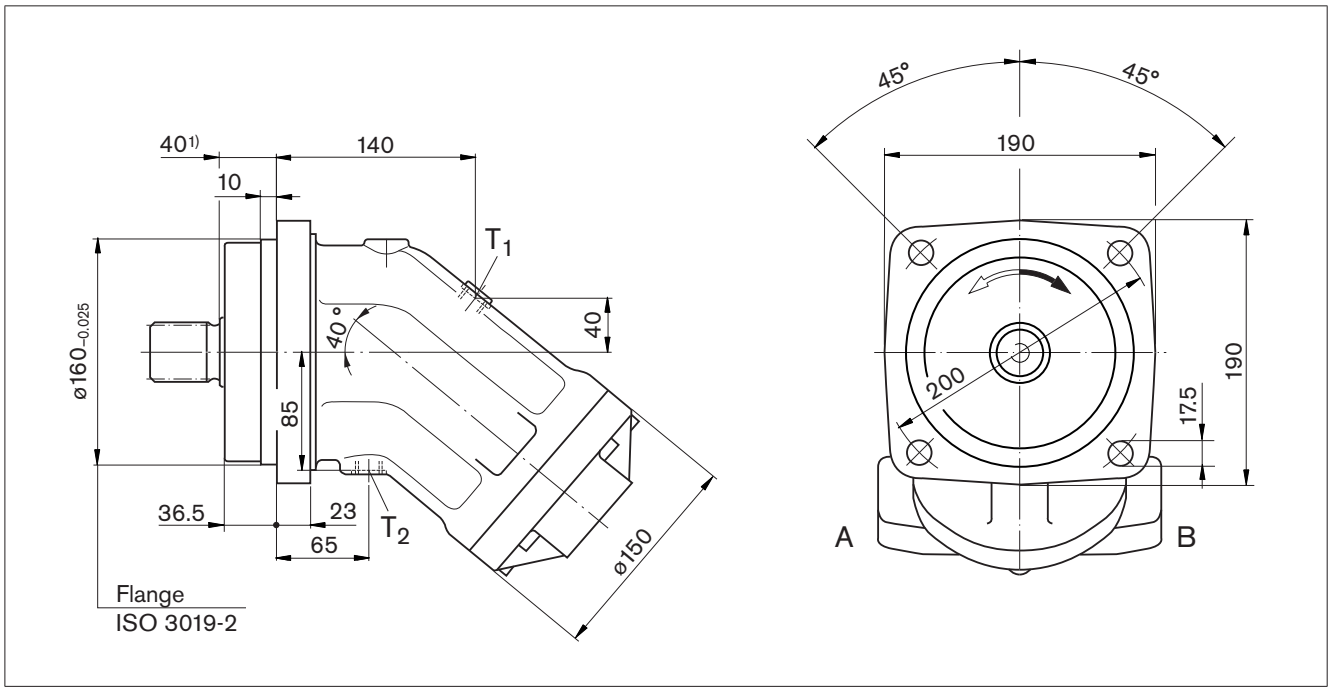

Drive shafts

NG107, 125

A Splined shaft DIN 5480 W45x2x21x9g

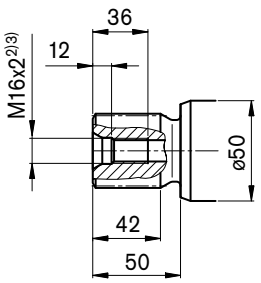

NG107

Z Splined shaft DIN 5480 W40x2x18x9g

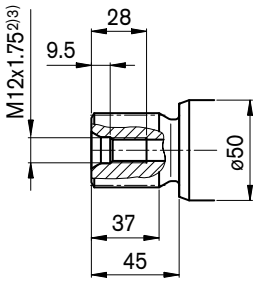

NG107, 125

B Parallel keyed shaft DIN 6885, AS14x9x63

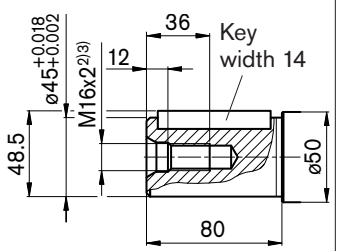

NG107

P Parallel keyed shaft DIN 6885, AS12x8x63

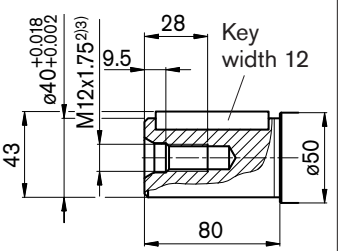

Ports

Designation	Port for	Standard	Size[3)]	Maximum pressure [bar][4)]	State[7)]
A, B	Service line (see port plates)			450	
T_1	Drain line	DIN 3852[6)]	M18 x 1.5; 12 deep	3	X[5)]
T_2	Drain line	DIN 3852[6)]	M18 x 1.5; 12 deep	3	O[5)]

1) To shaft collar
2) Center bore according to DIN 332 (thread according to DIN 13)
3) Observe the general instructions on page 46 for the maximum tightening torques.
4) Momentary pressure spikes may occur depending on the application. Keep this in mind when selecting measuring devices and fittings.
5) Depending on installation position, T_1 or T_2 must be connected (see also installation instructions on page 44).
6) The spot face can be deeper than specified in the appropriate standard.
7) O = Must be connected (plugged on delivery)
X = Plugged (in normal operation)

Dimensions sizes 107, 125

Before finalizing your design, request a binding installation drawing. Dimensions in mm.

Location of the service line ports on the port plates

01 – SAE flange ports at rear

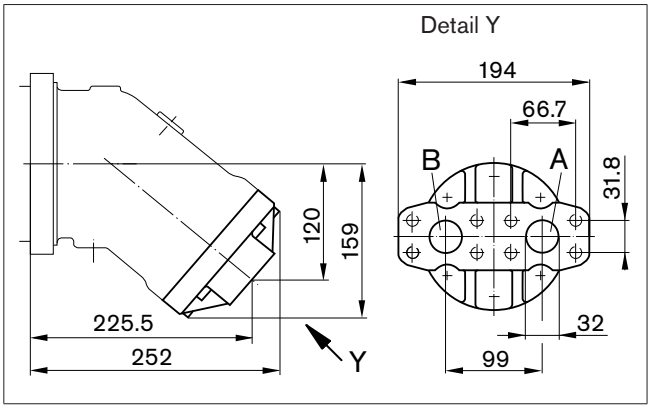

02 – SAE flange ports at side, opposite (size 107)

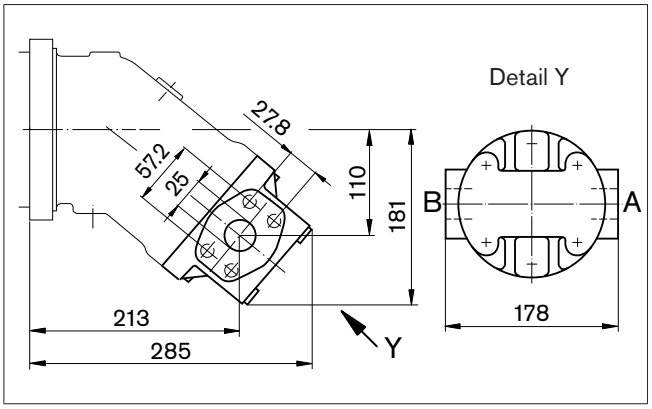

10 – SAE flange ports at bottom (same side)

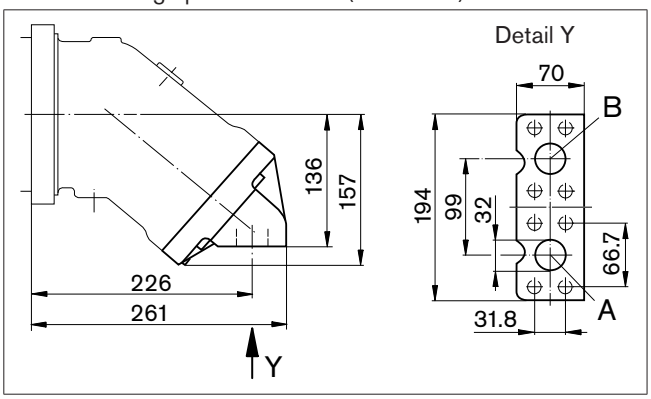

02 – SAE flange ports at side, opposite (size 125)

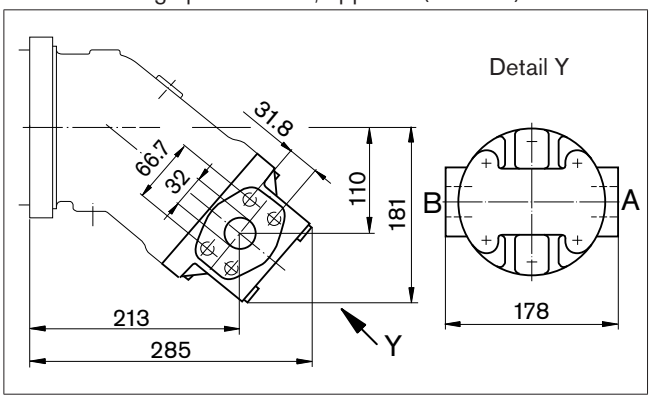

Plate	Designation	Port for	Standard	Size[1]	Maximum pressure [bar][2]	State[4]
01, 10	A, B	Service line Fastening thread A/B	SAE J518[3] DIN 13	1 1/4 in M14 x 2; 19 deep	450	O
02 (size 107)		Service line Fastening thread A/B	SAE J518[3] DIN 13	1 in M12 x 1.75; 17 deep	450	O
02 (size 125)		Service line Fastening thread A/B	SAE J518[3] DIN 13	1 1/4 in M14 x 2; 19 deep	450	O

1) Observe the general instructions on page 46 for the maximum tightening torques
2) Momentary pressure spikes may occur depending on the application. Keep this in mind when selecting measuring devices and fittings.
3) Only dimensions according to SAE J518, metric fastening thread is a deviation from standard.
4) O = Must be connected (plugged on delivery)

Note
Port plates 17, 18 and 19: see pages 37 and 40

Dimensions sizes 160, 180

Before finalizing your design, request a binding installation drawing. Dimensions in mm.

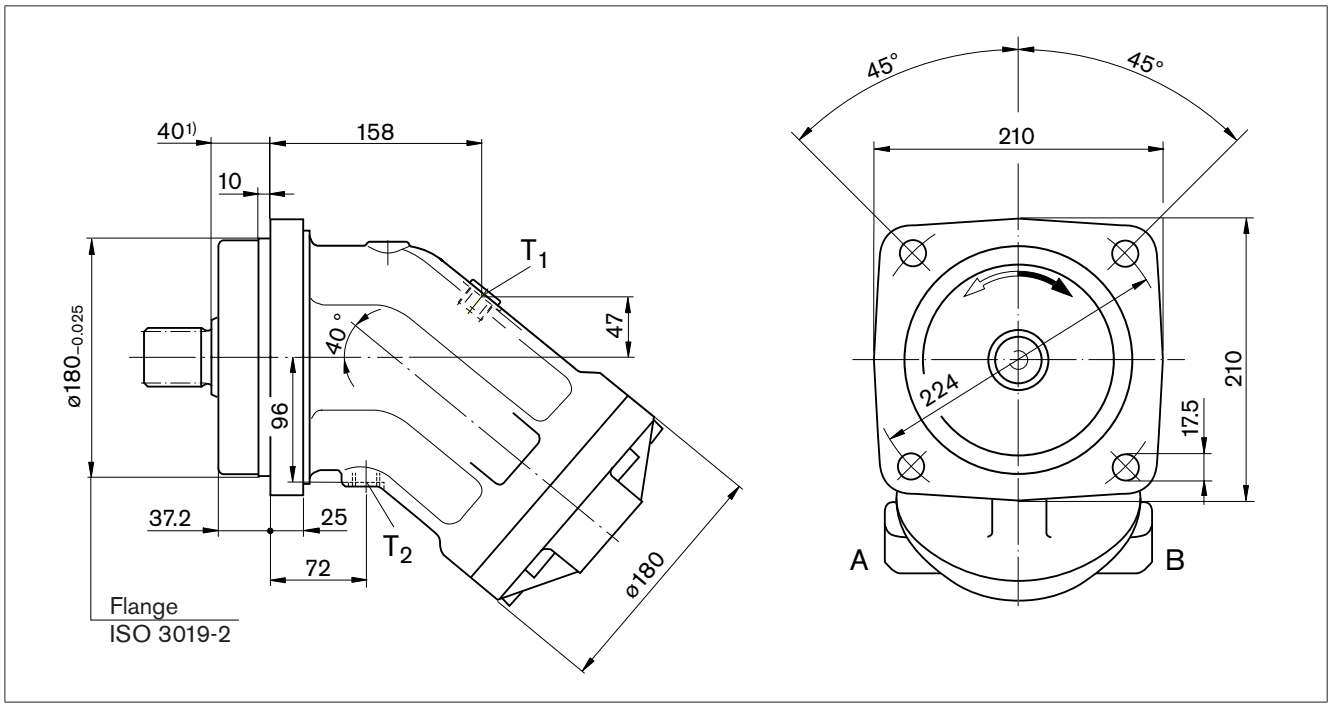

Drive shafts

NG160, 180

A Splined shaft DIN 5480
W50x2x24x9g

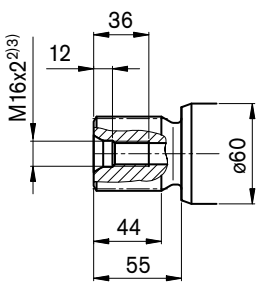

NG160

Z Splined shaft DIN 5480
W45x2x21x9g

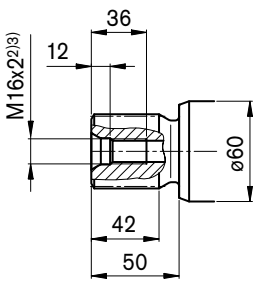

NG160, 180

B Parallel keyed shaft
DIN 6885, AS14x9x70

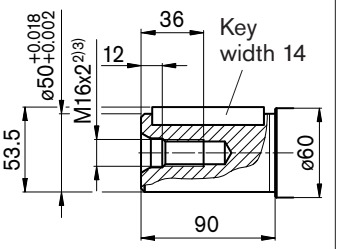

NG160

P Parallel keyed shaft
DIN 6885, AS14x9x70

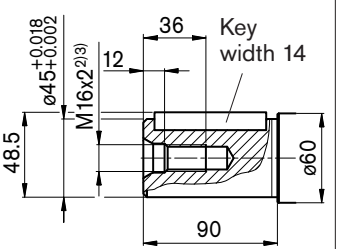

Ports

Designation	Port for	Standard	Size[3)]	Maximum pressure [bar][4)]	State[7)]
A, B	Service line (see port plates)			450	
T_1	Drain line	DIN 3852[6)]	M22 x 1.5; 14 deep	3	X[5)]
T_2	Drain line	DIN 3852[6)]	M22 x 1.5; 14 deep	3	O[5)]

1) To shaft collar
2) Center bore according to DIN 332 (thread according to DIN 13)
3) Observe the general instructions on page 46 for the maximum tightening torques.
4) Momentary pressure spikes may occur depending on the application. Keep this in mind when selecting measuring devices and fittings.
5) Depending on installation position, T_1 or T_2 must be connected (see also installation instructions on page 44).
6) The spot face can be deeper than specified in the appropriate standard.
7) O = Must be connected (plugged on delivery)
X = Plugged (in normal operation)

Dimensions sizes 160, 180

Before finalizing your design, request a binding installation drawing. Dimensions in mm.

Location of the service line ports on the port plates

01 – SAE flange ports at rear

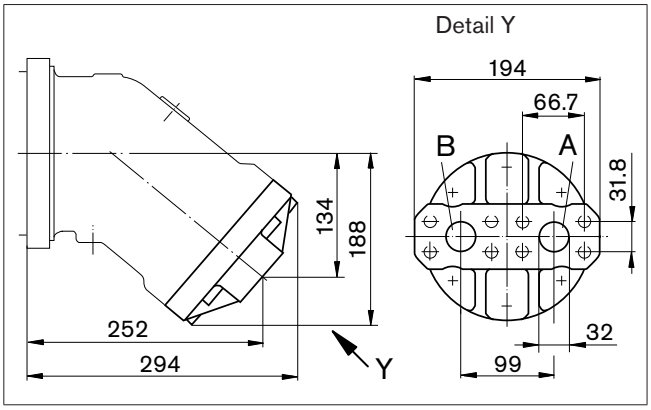

02 – SAE flange ports at side, opposite

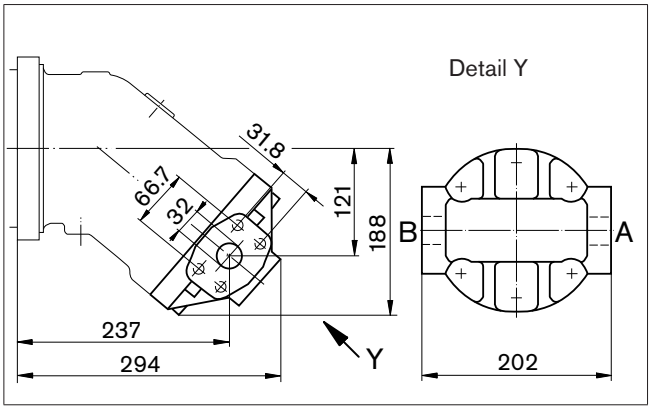

10 – SAE flange ports at bottom (same side)

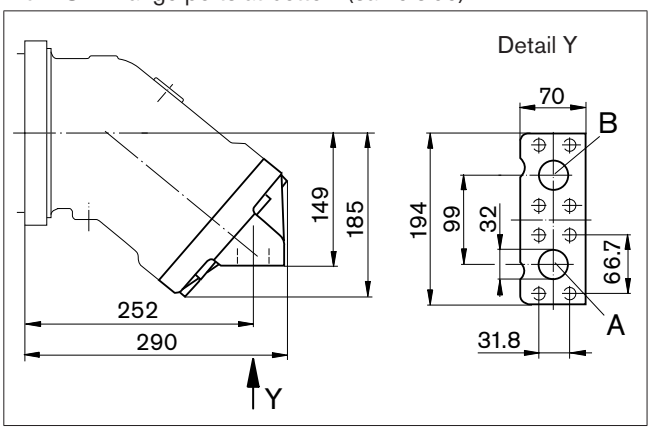

Plate	Designation	Port for	Standard	Size[1]	Maximum pressure [bar][2]	State[4]
01, 02, 10	A, B	Service line Fastening thread A/B	SAE J518[3] DIN 13	1 1/4 in M14 x 2; 19 deep	450	O

1) Observe the general instructions on page 46 for the maximum tightening torques
2) Momentary pressure spikes may occur depending on the application. Keep this in mind when selecting measuring devices and fittings.
3) Only dimensions according to SAE J518, metric fastening thread is a deviation from standard.
4) O = Must be connected (plugged on delivery)

Note
Port plates 18 and 19: see pages 37 and 40

Dimensions size 200

Before finalizing your design, request a binding installation drawing. Dimensions in mm.

Port plate 01 – SAE flange ports at rear

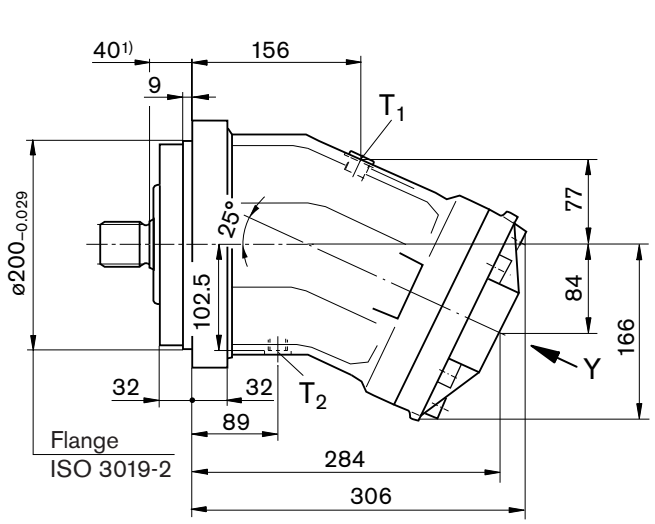

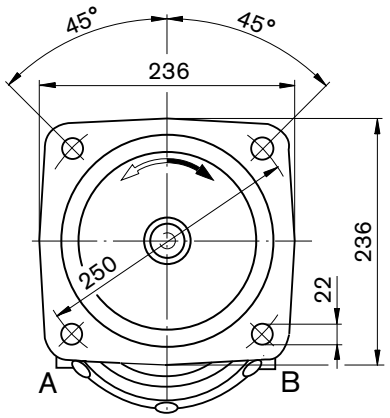

Detail Y

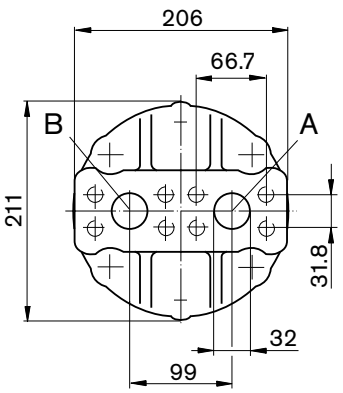

Drive shafts

A Splined shaft DIN 5480
W50x2x24x9g

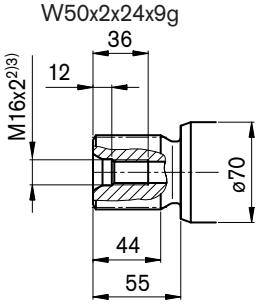

B Parallel keyed shaft
DIN 6885, AS14x9x80

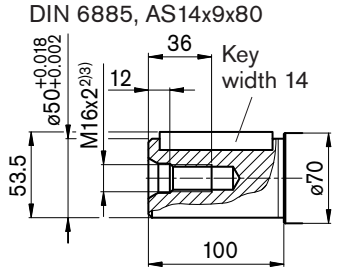

Ports

Designation	Port for	Standard	Size[3)]	Maximum pressure [bar][4)]	State[8)]
A, B	Service line Fastening thread A/B	SAE J5185[5)] DIN 13	1 1/4 in M14 x 2; 19 deep	450	O
T_1	Drain line	DIN 3852[7)]	M22 x 1.5; 14 deep	3	X[6)]
T_2	Drain line	DIN 3852[7)]	M22 x 1.5; 14 deep	3	O[6)]

1) To shaft collar
2) Center bore according to DIN 332 (thread according to DIN 13)
3) Observe the general instructions on page 46 for the maximum tightening torques.
4) Momentary pressure spikes may occur depending on the application. Keep this in mind when selecting measuring devices and fittings.
5) Only dimensions according to SAE J518, metric fastening thread is a deviation from standard.
6) Depending on installation position, T_1 or T_2 must be connected (see also installation instructions on page 44).
7) The spot face can be deeper than specified in the appropriate standard.
8) O = Must be connected (plugged on delivery)
X = Plugged (in normal operation)

Notes

Dimensions size 250

Before finalizing your design, request a binding installation drawing. Dimensions in mm.

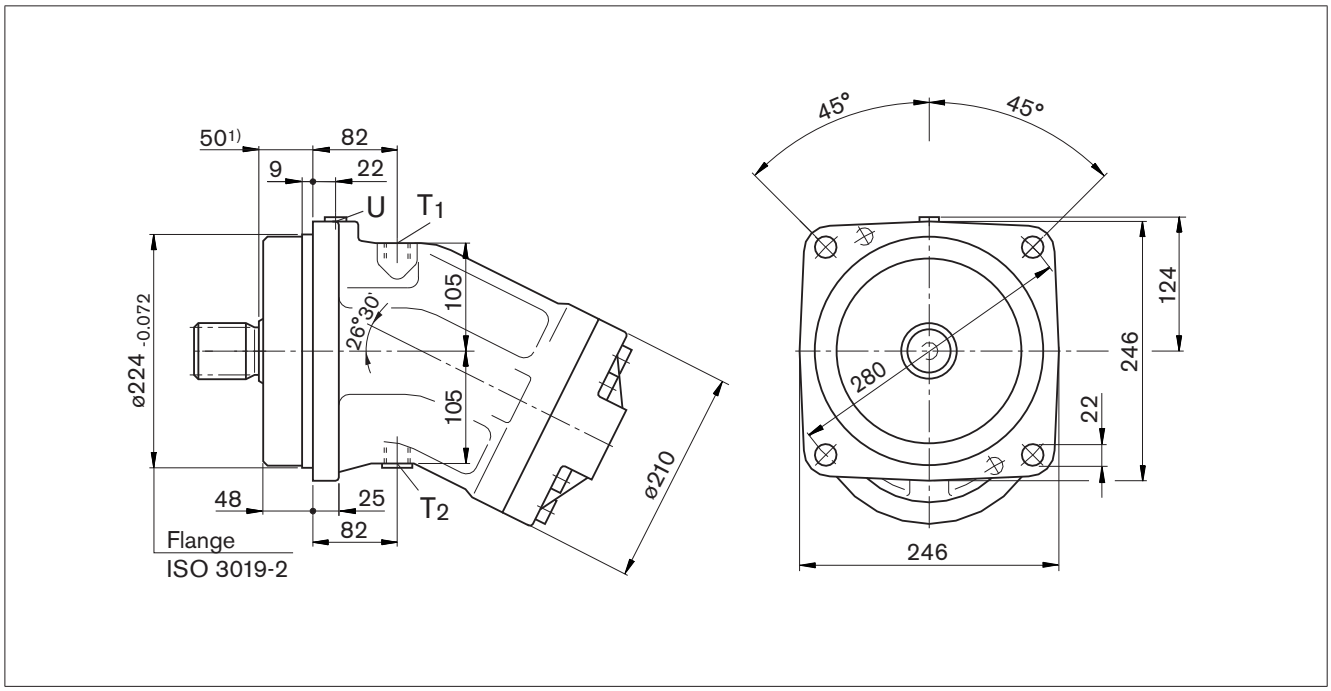

Drive shafts

Z Splined shaft DIN 5480
W50x2x24x9g

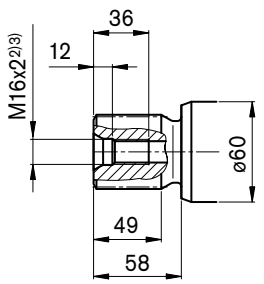

P Parallel keyed shaft
DIN 6885, AS14x9x80

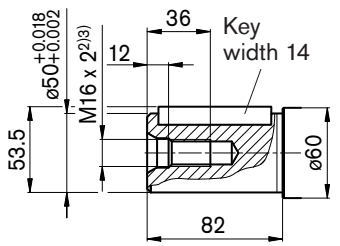

Ports

Designation	Port for	Standard	Size[3)]	Maximum pressure [bar][4)]	State[7)]
A, B	Service line (see port plates)			400	
T_1	Drain line	DIN 3852[6)]	M22 x 1.5; 14 deep	3	O[5)]
T_2	Drain line	DIN 3852[6)]	M22 x 1.5; 14 deep	3	X[5)]
U	Bearing flushing	DIN 3852[6)]	M14 x 1.5; 12 deep	3	X

1) To shaft collar
2) Center bore according to DIN 332 (thread according to DIN 13)
3) Observe the general instructions on page 46 for the maximum tightening torques.
4) Momentary pressure spikes may occur depending on the application. Keep this in mind when selecting measuring devices and fittings.
5) Depending on installation position, T_1 or T_2 must be connected (see also installation instructions on page 44).
6) The spot face can be deeper than specified in the appropriate standard.
7) O = Must be connected (plugged on delivery)
X = Plugged (in normal operation)

Dimensions size 250

Before finalizing your design, request a binding installation drawing. Dimensions in mm.

Location of the service line ports on the port plates

01 – SAE flange ports at rear

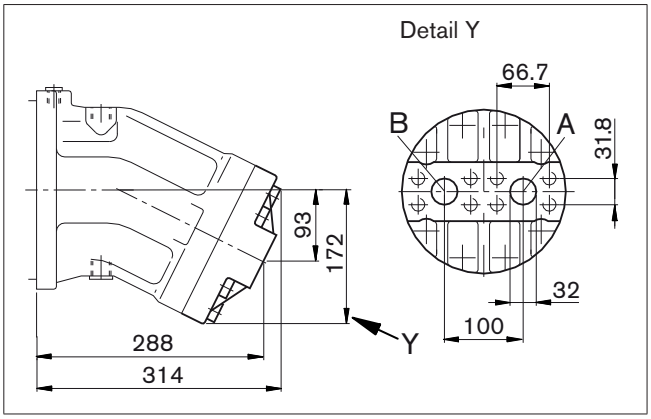

02 – SAE flange ports at side, opposite

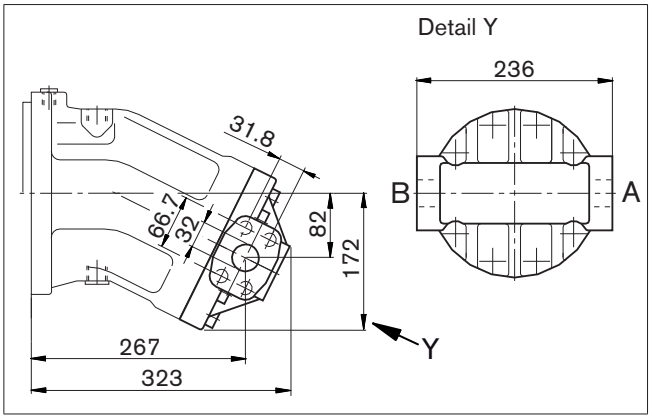

Plate	Designation	Port for	Standard	Size[1]	Maximum pressure [bar][2]	State[4]
01, 02	A, B	Service line Fastening thread A/B	SAE J518[3] DIN 13	1 1/4 in M14 x 2; 19 deep	400	O

1) Observe the general instructions on page 46 for the maximum tightening torques
2) Momentary pressure spikes may occur depending on the application. Keep this in mind when selecting measuring devices and fittings.
3) Only dimensions according to SAE J518, metric fastening thread is a deviation from standard.
4) O = Must be connected (plugged on delivery)

Dimensions size 355

Before finalizing your design, request a binding installation drawing. Dimensions in mm.

Port plate 01 – SAE flange ports at rear

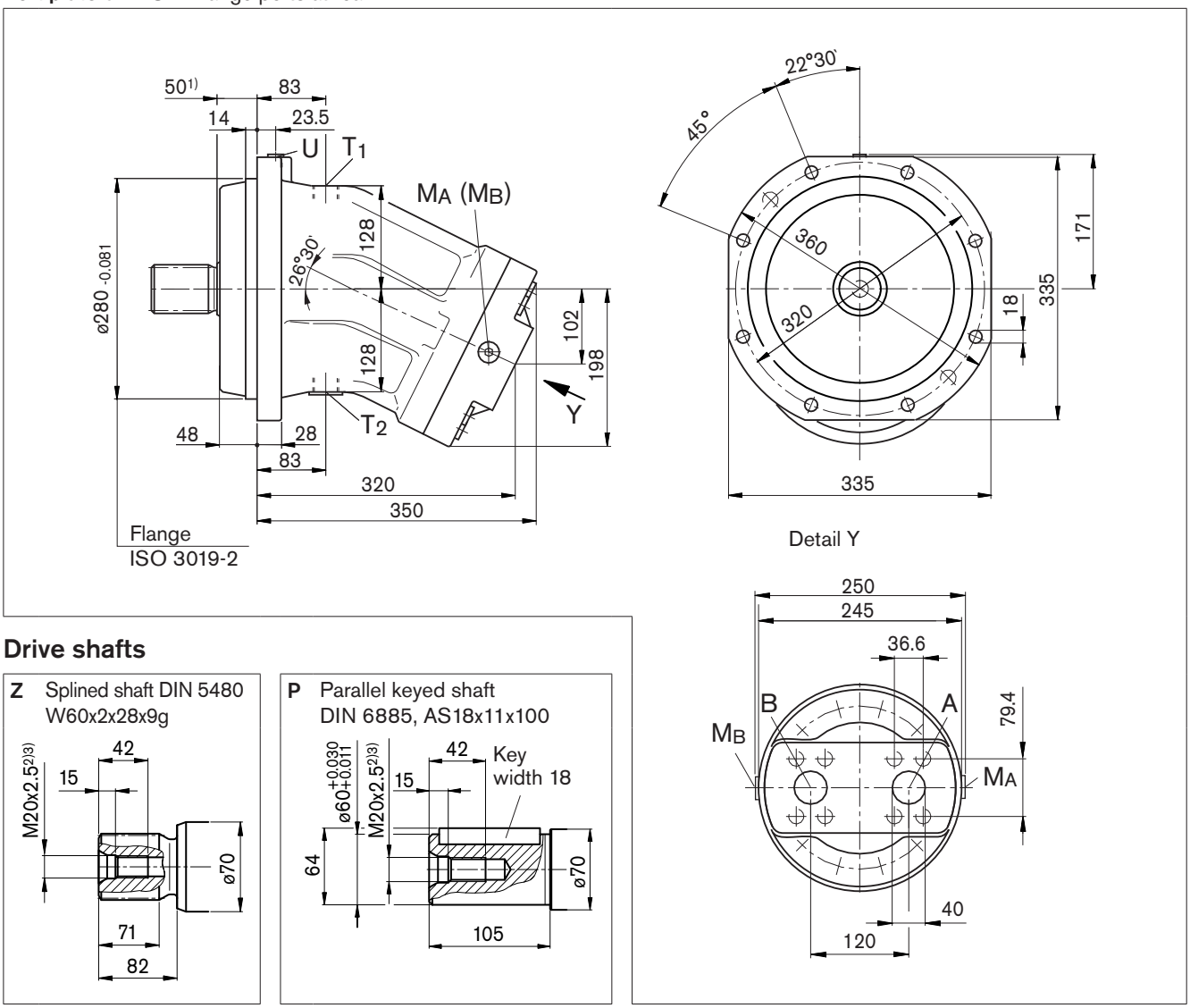

Drive shafts

Z Splined shaft DIN 5480
W60x2x28x9g

P Parallel keyed shaft
DIN 6885, AS18x11x100

Ports

Designation	Port for	Standard	Size[3)]	Maximum pressure [bar][4)]	State[8)]
A, B	Service line Fastening thread A/B	SAE J5185[5)] DIN 13	1 1/2 in M16 x 2; 21 deep	400	O
T_1	Drain line	DIN 3852[7)]	M33 x 2; 18 deep	3	O[6)]
T_2	Drain line	DIN 3852[7)]	M33 x 2; 18 deep	3	X[6)]
U	Bearing flushing	DIN 3852[7)]	M14 x 1.5; 12 deep	3	X
M_A, M_B	Measuring operating pressure	DIN 3852[7)]	M14 x 1.5; 12 deep	400	X

1) To shaft collar
2) Center bore according to DIN 332 (thread according to DIN 13)
3) Observe the general instructions on page 46 for the maximum tightening torques.
4) Momentary pressure spikes may occur depending on the application. Keep this in mind when selecting measuring devices and fittings.
5) Only dimensions according to SAE J518, metric fastening thread is a deviation from standard.
6) Depending on installation position, T_1 or T_2 must be connected (see also installation instructions on page 44).
7) The spot face can be deeper than specified in the appropriate standard.
8) O = Must be connected (plugged on delivery)
X = Plugged (in normal operation)

Dimensions size 500

Before finalizing your design, request a binding installation drawing. Dimensions in mm.

Port plate 01 – SAE flange ports at rear

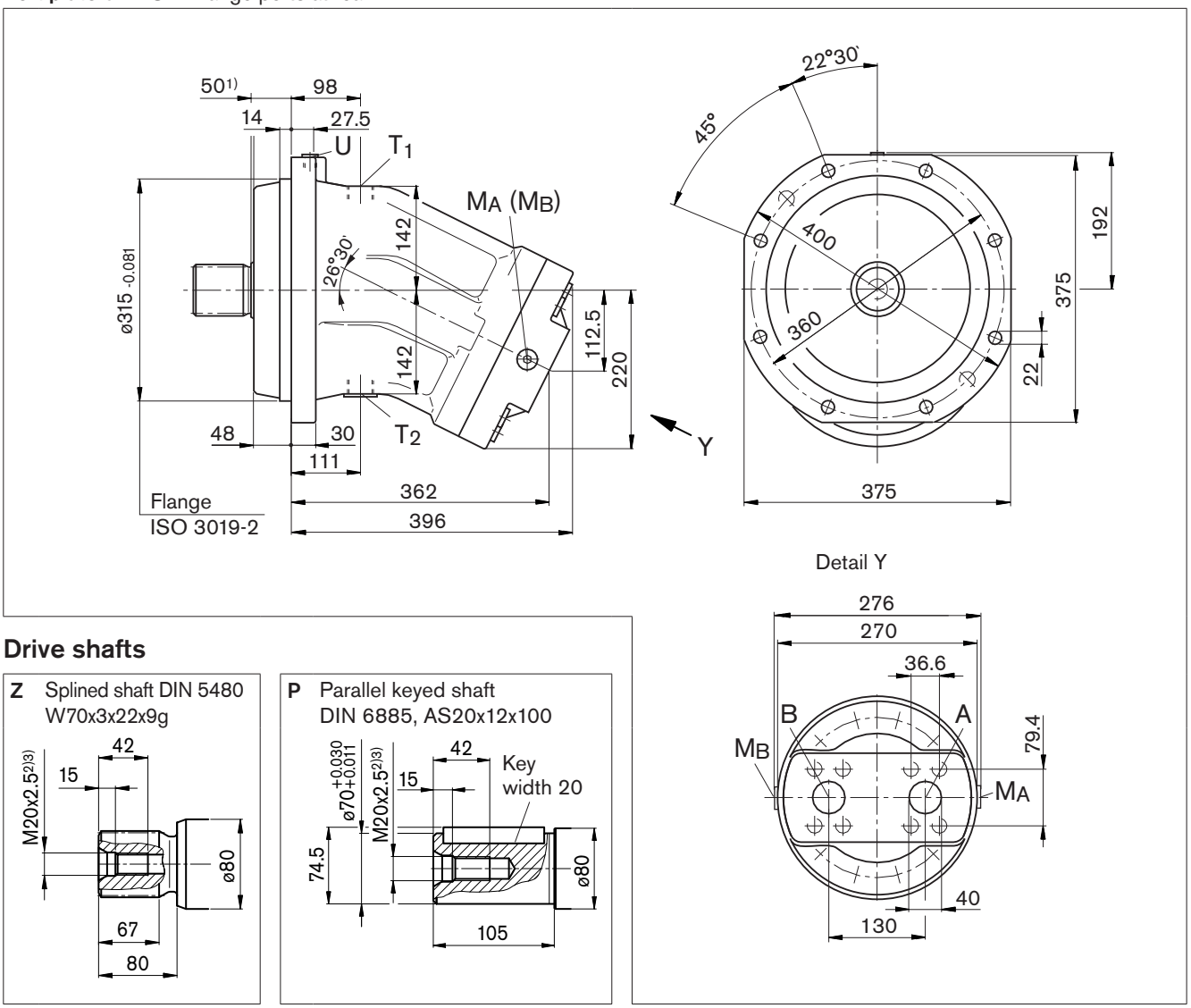

Drive shafts

Z Splined shaft DIN 5480
W70x3x22x9g

P Parallel keyed shaft
DIN 6885, AS20x12x100

Ports

Designation	Port for	Standard	Size[3)]	Maximum pressure [bar][4)]	State[8)]
A, B	Service line Fastening thread A/B	SAE J5185[5)] DIN 13	1 1/2 in M16 x 2; 21 deep	400	O
T_1	Drain line	DIN 3852[7)]	M33 x 2; 18 deep	3	O[6)]
T_2	Drain line	DIN 3852[7)]	M33 x 2; 18 deep	3	X[6)]
U	Bearing flushing	DIN 3852[7)]	M18 x 1.5; 12 deep	3	X
M_A, M_B	Measuring operating pressure	DIN 3852[7)]	M14 x 1.5; 12 deep	400	X

1) To shaft collar
2) Center bore according to DIN 332 (thread according to DIN 13)
3) Observe the general instructions on page 46 for the maximum tightening torques.
4) Momentary pressure spikes may occur depending on the application. Keep this in mind when selecting measuring devices and fittings.
5) Only dimensions according to SAE J518, metric fastening thread is a deviation from standard.
6) Depending on installation position, T_1 or T_2 must be connected (see also installation instructions on page 44).
7) The spot face can be deeper than specified in the appropriate standard.
8) O = Must be connected (plugged on delivery)
X = Plugged (in normal operation)

Dimensions size 710

Before finalizing your design, request a binding installation drawing. Dimensions in mm.

Port plate 01 – SAE flange ports at rear

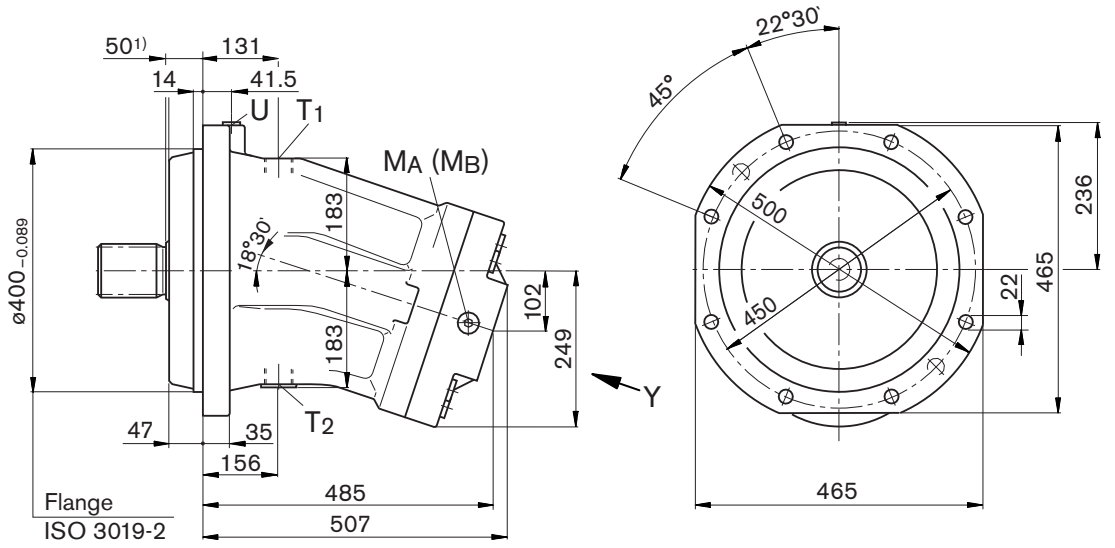

Drive shafts

Z Splined shaft DIN 5480
W90x3x28x9g

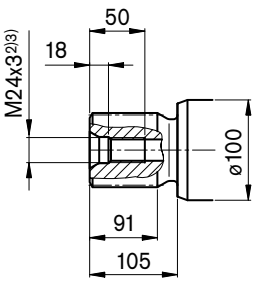

P Parallel keyed shaft
DIN 6885, AS25x14x125

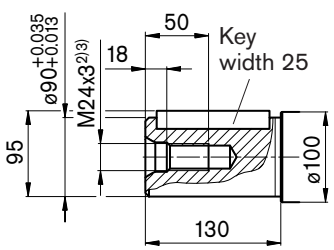

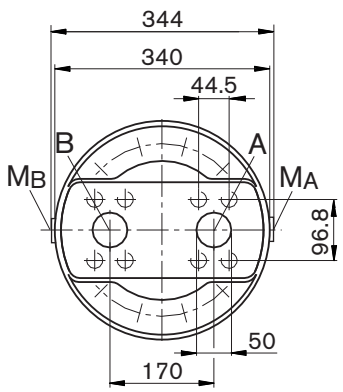

Ports

Designation	Port for	Standard	Size[3)]	Maximum pressure [bar][4)]	State[8)]
A, B	Service line Fastening thread A/B	SAE J518[5)] DIN 13	2 in M20 x 2.5; 30 deep	400	O
T_1	Drain line	DIN 3852[7)]	M42 x 2; 20 deep	3	O[6)]
T_2	Drain line	DIN 3852[7)]	M42 x 2; 20 deep	3	X[6)]
U	Bearing flushing	DIN 3852[7)]	M18 x 1.5; 12 deep	3	X
M_A, M_B	Measuring operating pressure	DIN 3852[7)]	M14 x 1.5; 12 deep	400	X

1) To shaft collar
2) Center bore according to DIN 332 (thread according to DIN 13)
3) Observe the general instructions on page 46 for the maximum tightening torques.
4) Momentary pressure spikes may occur depending on the application. Keep this in mind when selecting measuring devices and fittings.
5) Only dimensions according to SAE J518, metric fastening thread is a deviation from standard.
6) Depending on installation position, T_1 or T_2 must be connected (see also installation instructions on page 44).
7) The spot face can be deeper than specified in the appropriate standard.
8) O = Must be connected (plugged on delivery)
X = Plugged (in normal operation)

Dimensions size 1000

Before finalizing your design, request a binding installation drawing. Dimensions in mm.

Port plate 01 – SAE flange ports at rear

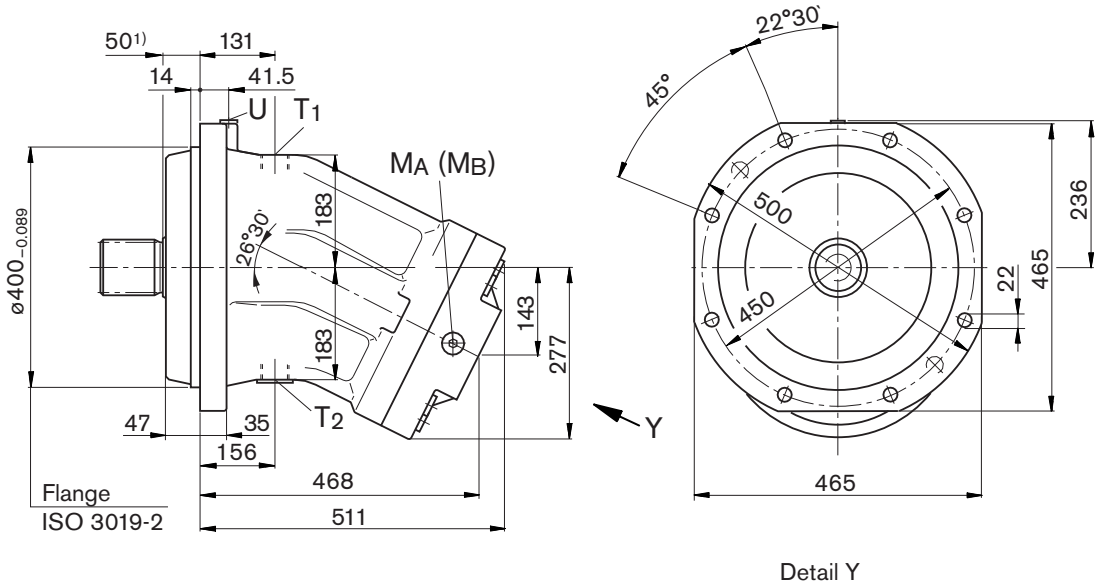

Detail Y

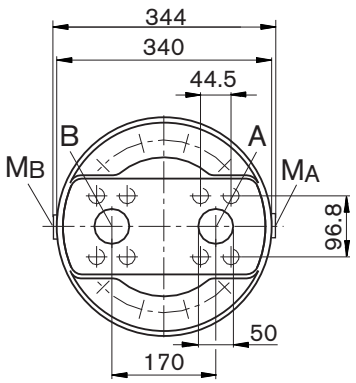

Drive shafts

Z Splined shaft DIN 5480
W90x3x28x9g

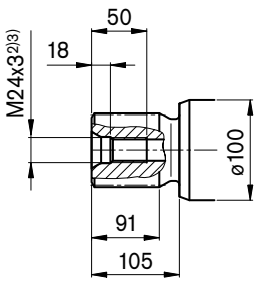

P Parallel keyed shaft
DIN 6885, AS25x14x125

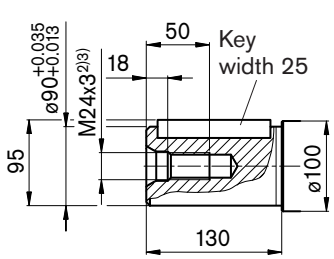

Ports

Designation	Port for	Standard	Size[3)]	Maximum pressure [bar][4)]	State[8)]
A, B	Service line Fastening thread A/B	SAE J518[5)] DIN 13	2 in M20 x 2.5; 30 deep	400	O
T_1	Drain line	DIN 3852[7)]	M42 x 2; 20 deep	3	O[6)]
T_2	Drain line	DIN 3852[7)]	M42 x 2; 20 deep	3	X[6)]
U	Bearing flushing	DIN 3852[7)]	M18 x 1.5; 12 deep	3	X
M_A, M_B	Measuring operating pressure	DIN 3852[7)]	M14 x 1.5; 12 deep	400	X

1) To shaft collar
2) Center bore according to DIN 332 (thread according to DIN 13)
3) Observe the general instructions on page 46 for the maximum tightening torques.
4) Momentary pressure spikes may occur depending on the application. Keep this in mind when selecting measuring devices and fittings.
5) Only dimensions according to SAE J518, metric fastening thread is a deviation from standard.
6) Depending on installation position, T_1 or T_2 must be connected (see also installation instructions on page 44).
7) The spot face can be deeper than specified in the appropriate standard.
8) O = Must be connected (plugged on delivery)
X = Plugged (in normal operation)

Flushing and boost pressure valve

Before finalizing your design, request a binding installation drawing. Dimensions in mm.

The flushing and boost pressure valve is used to remove heat from the hydraulic circuit.

In an open circuit, it is used only for flushing the housing.

In a closed circuit, it ensures a minimum boost pressure level in addition to the case flushing.

Hydraulic fluid is directed from the respective low pressure side into the motor housing. This is then fed into the reservoir, together with the case drain fluid. The hydraulic fluid, removed out of the closed circuit must be replaced by cooled hydraulic fluid from the boost pump.

With port plate 027, the valve is mounted directly on the fixed motor (sizes 45 to 180, 250); with port plate 017 (sizes 355 and 500) on a plate.

Cracking pressure of pressure retaining valve
(observe when setting the primary valve)
Sizes 45 to 500, fixed setting 16 bar

Switching pressure of flushing piston Δp
Sizes 45 to 500 8±1 bar

Flushing flow q_v

Orifice (throttles with integrated valve) can be used to set the flushing flows as required.
Following parameters are based on:
$\Delta p_{ND} = p_{ND} - p_G = 25$ bar and $\nu = 10$ mm²/s
(p_{ND} = low pressure, p_G = case pressure)

Schematic

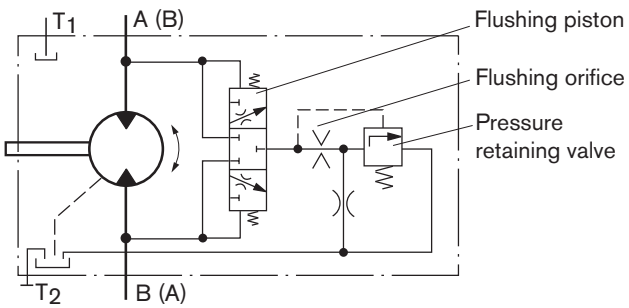

Standard flushing flows

Flushing and boost pressure valve, mounted (code 7)

Size	Flushing flow q_v [L/min]	⌀ [mm]	Mat. No. of orifice
45	3.5	1.2	R909651766
107, 125	8	1.8	R909419696
160, 180	10	2.0	R909419697
250	10	2.0	R909419697
355, 500	16	2.5	R910803019

With sizes 45 to 180, orifices can be supplied for flushing flows from 3.5 to 10 L/min. For other flushing flows, please state the required flushing flow when ordering. The flushing flow without orifice is approx. 12 to 14 L at low pressure $\Delta p_{ND} = 25$ bar.

Flushing and boost pressure valve, integrated (code 9)

Size	Throttle ⌀ [mm]	q_v [L/min]
56, 63, 80, 90	1.5	6
	1.8	7.3

Flushing and boost pressure valve

Before finalizing your design, request a binding installation drawing. Dimensions in mm.

Dimensions

Port plate 027 – SAE flange ports at side

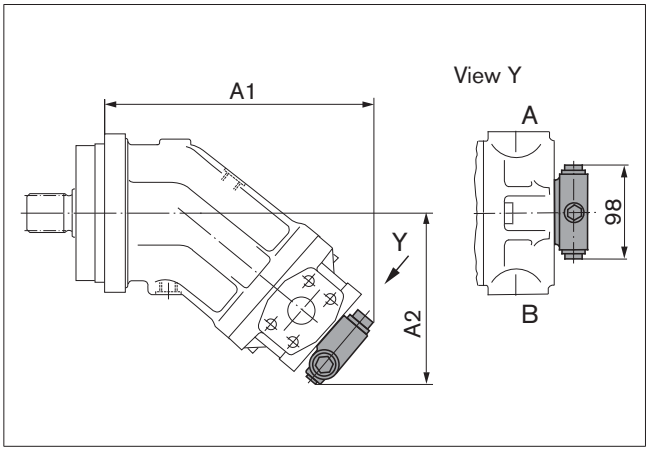

Size	A1	A2
45	223	151
107, 125	294	192
160, 180	315	201
250	344	172

Port plate 029 – SAE flange ports at side

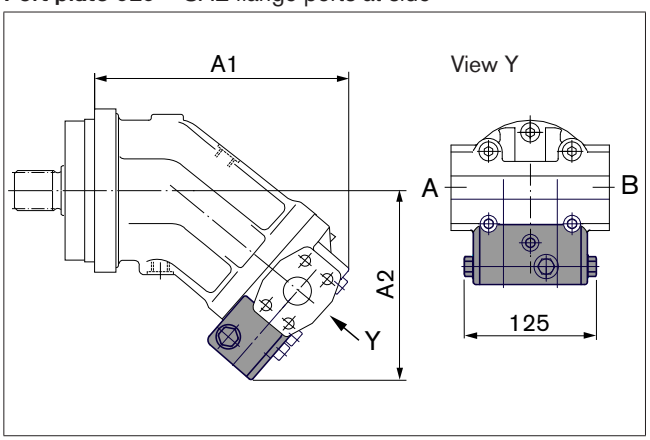

Size	A1	A2
56, 63	225	176
80, 90	257	186.7

Port plate 017 – SAE flange ports at rear

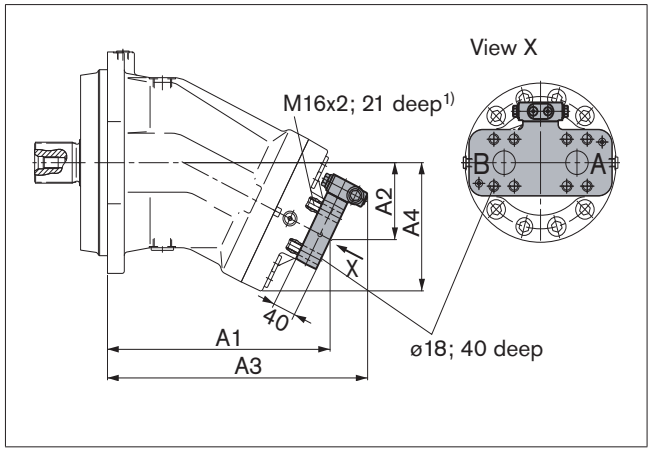

Size	A1	A2	A3	A4
355	356	120	421	198
500	397	130	464	220

1) DIN 13, observe the general instructions on page 46 for the maximum tightening torques

2

Pressure-relief valve

Before finalizing your design, request a binding installation drawing. Dimensions in mm.

The MHDB pressure-relief valves (see RE 64642) protect the hydraulic motor from overload. As soon as the set cracking pressure is reached, the hydraulic fluid flows from the high-pressure side to the low-pressure side.

The pressure-relief valves are only available in combination with port plates 181, 191 or 192 (counterbalance valve for mounting to port plate 181: see next page).

Cracking pressure setting range _____ 50 to 420 bar

With the version "with pressure boost facility" (192), a higher pressure setting can be realized by applying an external pilot pressure of 25 to 30 bar to port P_{St}.

When ordering, please state in plain text:

– Cracking pressure of pressure-relief valve

– Cracking pressure with pilot pressure applied to P_{St} (only with version 192)

Version without pressure boost facility "191"

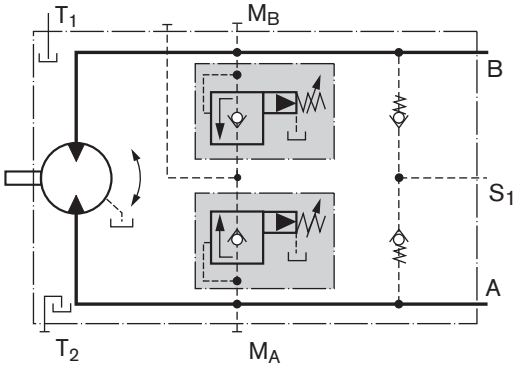

Version with pressure boost facility "192"

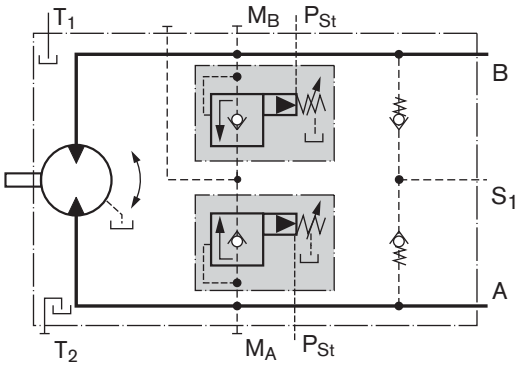

Pressure-relief valve

Before finalizing your design, request a binding installation drawing. Dimensions in mm.

Dimensions

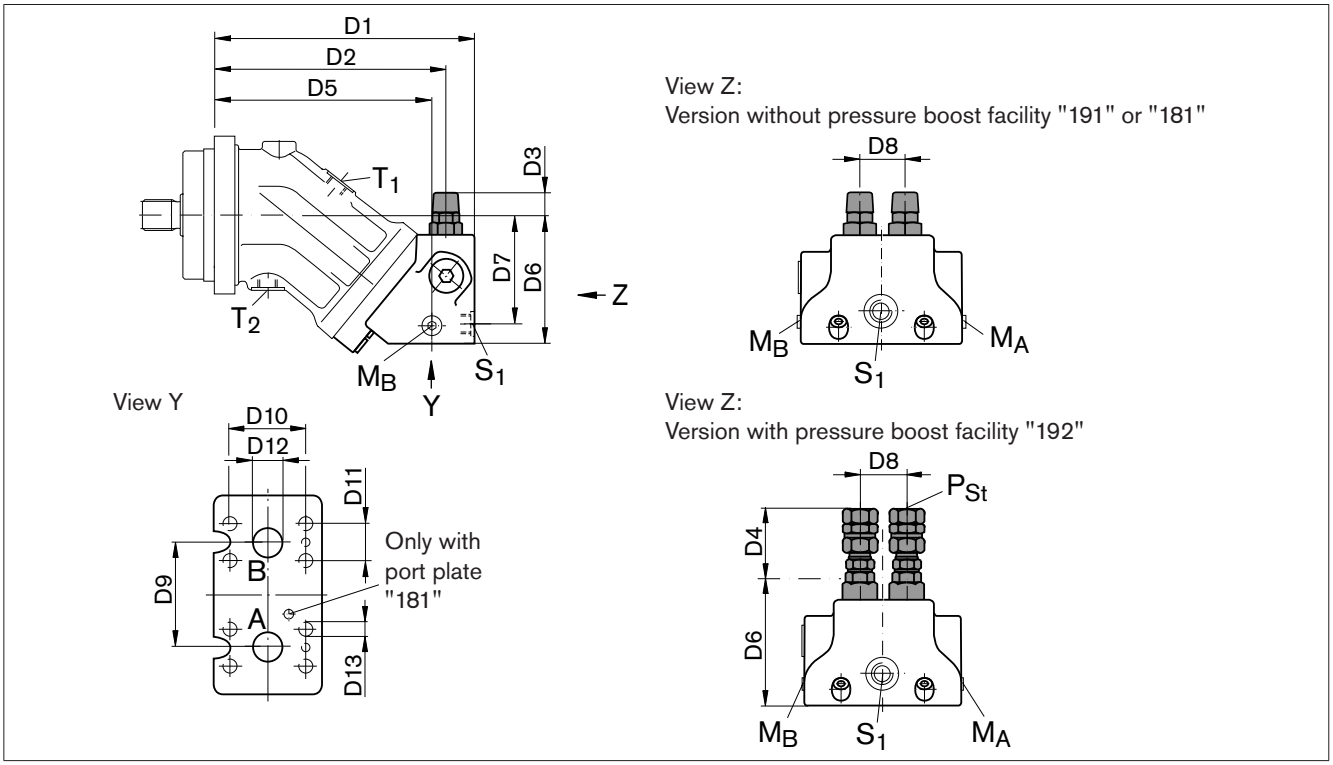

Size		D1	D2	D3	D4	D5	D6	D7	D8	D9	D10	D11	D12	D13[2]
28, 32	MHDB.**16**	209	186	25	68	174	102	87	36	66	50.8	23.8	ø19	M10; 17 deep
45	MHDB.**16**	222	198	22	65	187	113	98	36	66	50.8	23.8	ø19	M10; 17 deep
56, 63	MHDB.**22**	250	222	19	61	208	124	105	42	75	50.8	23.8	ø19	M10; 13 deep
80, 90	MHDB.**22**	271	243	17.5	59	229	134	114	42	75	57.2	27.8	ø25	M12; 18 deep
107, 125	MHDB.**32**	298	266	10	52	250	149.5	130	53	84	66.7	31.8	ø32	M14; 19 deep
160, 180	MHDB.**32**	332	301	5	47	285	170	149	53	84	66.7	31.8	ø32	M14; 19 deep

Size	A, B	S_1[1]	M_A, M_B[1]	P_{St}[1]
28, 32	3/4 in	M22 x 1.5; 14 deep	M20 x 1.5; 14 deep	G 1/4
45	3/4 in	M22 x 1.5; 14 deep	M20 x 1.5; 14 deep	G 1/4
56, 63	3/4 in	M26 x 1.5; 16 deep	M26 x 1.5; 16 deep	G 1/4
80, 90	1 in	M26 x 1.5; 16 deep	M26 x 1.5; 16 deep	G 1/4
107, 125	1 1/4 in	M26 x 1.5; 16 deep	M26 x 1.5; 16 deep	G 1/4
160, 180	1 1/4 in	M26 x 1.5; 16 deep	M30 x 1.5; 16 deep	G 1/4

Assembly instructions for port plate with pressure boost facility "192":
The lock nut must be counterheld when installing the hydraulic line at the p_{st} port!

Ports

Designation	Port for	Standard	Size	Maximum pressure [bar][2]	State[3]
A, B	Service line	SAE J518	See above	450	O
S_1	Supply (only with port plate 191/192)	DIN 3852	See above	5	O
M_A, M_B	Measuring operating pressure	DIN 3852	See above	450	X
P_{St}	Pilot pressure (only with port plate 192)	DIN ISO 228	See above	30	O

1) Observe the general instructions on page 46 for the maximum tightening torques.
2) Momentary pressure spikes may occur depending on the application. Keep this in mind when selecting measuring devices and fittings.
3) O = Must be connected (plugged on delivery)
X = Plugged (in normal operation)

Counterbalance valve BVD and BVE

Before finalizing your design, request a binding installation drawing. Dimensions in mm.

Function

Travel drive/winch counterbalance valves are designed to reduce the danger of overspeeding and cavitation of axial piston motors in open circuits. Cavitation occurs if the motor speed is greater than it should be for the given input flow while braking, travelling downhill, or lowering a load.

If the inlet pressure drops, the counterbalance spool throttles the return flow and brakes the motor until the inlet pressure returns to approx. 20 bar.

Note

– BVD available for sizes 28 to 180 and BVE available for sizes 107 to 180.

– The counterbalance valve must be ordered additionally. We recommend ordering the counterbalance valve and the motor as a set. Ordering example: A2FM90/61W–VAB**188** + BVD20F27S/41B–V03K16D0400S12

– The counterbalance valve does not replace the mechanical service brake and park brake.

– Observe the detailed notes on the BVD counterbalance valve in RE 95522 and BVE counterbalance valve in RE 95525!

– For the design of the brake release valve, we must know for the mechanical park brake:

- the pressure at the start of opening
- the volume of the counterbalance spool between minimum stroke (brake closed) and maximum stroke (brake released with 21 bar)
- the required closing time for a warm device (oil viscosity approx. 15 mm^2/s)

Travel drive counterbalance valve BVD...F

Application option

– Travel drive on wheeled excavators

Example schematic for travel drive on wheeled excavators
A2FM090/61W-VAB188 + BVD20F27S/41B–V03K16D0400S12

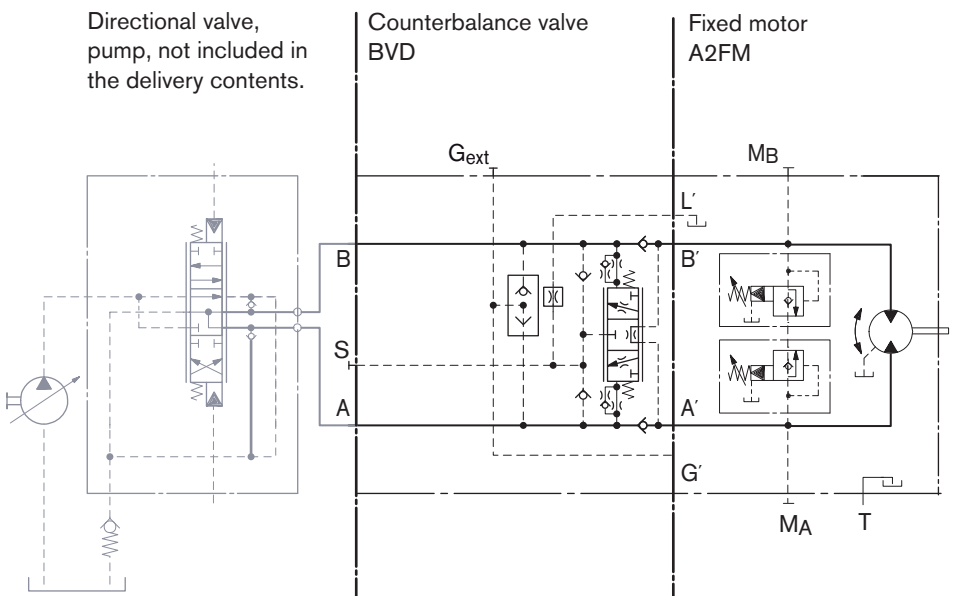

Counterbalance valve BVD and BVE

Before finalizing your design, request a binding installation drawing. Dimensions in mm.

Winch counterbalance valve BVD...W and BVE

Application options

– Winch drive in cranes (BVD and BVE)

– Track drive in excavator crawlers (BVD)

Example schematic for winch drive in cranes
A2FM090/61W-VAB188 + BVE25W385/51ND-V100K00D4599T30S00-0

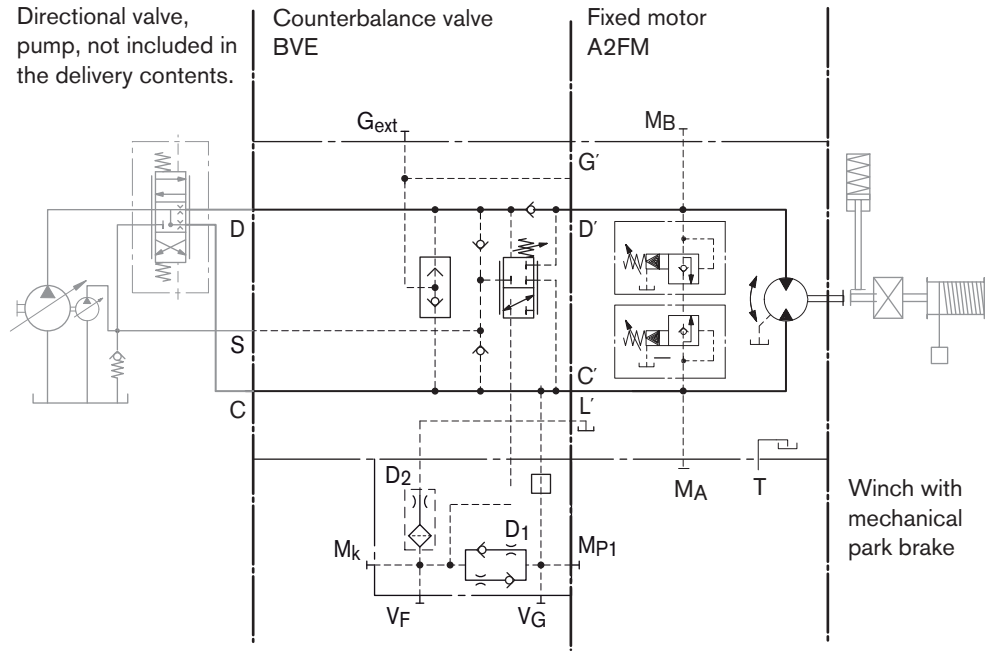

Permissible input flow or pressure in operation with DBV and BVD/BVE

Motor	Without valve		Restricted values in operation with DBV and BVD/BVE							
			DBV				BVD/BVE			
NG	p_{nom}/p_{max} [bar]	$q_{V\ max}$ [L/min]	NG	p_{nom}/p_{max} [bar]	q_V [L/min]	Code	NG	p_{nom}/p_{max} [bar]	q_V [L/min]	Code
28	400/450	176	16	350/420	100	181 191, 192	20 (BVD)	350/420	100	188
32		201								
45		255								
56		280	22		240				220	
63		315								
80		360								
90		405								
107		427				171 191, 192				178
125		500								
107		427	32		400	181 191, 192	25 (BVD/BVE)		320	188
125		500								
160		577								
180		648								

DBV _____ pressure-relief valve

BVD _____ counterbalance valve, double-acting

BVE _____ counterbalance valve, one-sided

Counterbalance valve BVD and BVE

Before finalizing your design, request a binding installation drawing. Dimensions in mm.

Dimensions

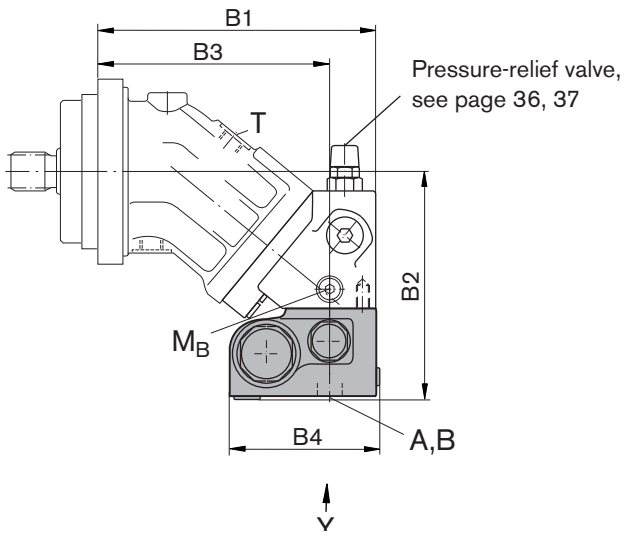

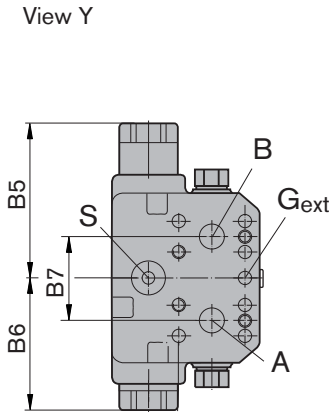

A2FM Size	Counterbalance valve Type	Ports A, B	Dimensions B1	B2	B3	B4 (S)	B4 (L)	B5	B6	B7
28, 32	BVD**20**..16	3/4 in	209	175	174	142	147	139	98	66
45	BVD**20**..16	3/4 in	222	196	187	142	147	139	98	66
56, 63	BVD**20**..17	3/4 in	250	197	208	142	147	139	98	75
80, 90	BVD**20**..27	1 in	271	207	229	142	147	139	98	75
107, 125	BVD**20**..28	1 in	298	238	251	142	147	139	98	84
107, 125	BVD**25**..38	$1^1/_4$ in	298	239	251	158	163	175	120.5	84
160, 180	BVD**25**..38	$1^1/_4$ in	332	260	285	158	163	175	120.5	84
107, 125	BVE**25**..38	$1^1/_4$ in	298	240	251	167	172	214	137	84
160, 180	BVE**25**..38	$1^1/_4$ in	332	260	285	167	172	214	137	84
250	On request									

Ports

Designation	Port for	Version	Standard	Size[1]	Maximum pressure [bar][2]	State[4]
A, B	Service line		SAE J518	see table above	420	O
S	Infeed	BVD20	DIN 3852[3]	M22 x 1.5; 14 deep	30	X
		BVD25, BVE25	DIN 3852[3]	M27 x 2; 16 deep	30	X
Br	Brake release, reduced high pressure	L	DIN 3852[3]	M12 x 1.5; 12.5 deep	30	O
G_{ext}	Brake release, high pressure	S	DIN 3852[3]	M12 x 1.5; 12.5 deep	420	X
M_A, M_B	Measuring pressure A and B		ISO 6149[3]	M12 x 1.5; 12 deep	420	X

1) Observe the general instructions on page 46 for the maximum tightening torques.
2) Momentary pressure spikes may occur depending on the application. Keep this in mind when selecting measuring devices and fittings.
3) The spot face can be deeper than specified in the appropriate standard.
4) O = Must be connected (plugged on delivery)
X = Plugged (in normal operation)

Counterbalance valve BVD and BVE

Before finalizing your design, request a binding installation drawing. Dimensions in mm.

Mounting the counterbalance valve

When delivered, the counterbalance valve is mounted to the motor with two tacking screws (transport protection). The tacking screws may not be removed while mounting the service lines. If the counterbalance valve and motor are delivered separately, the counterbalance valve must first be mounted to the motor port plate using the provided tacking screws. The counterbalance valve is finally mounted to the motor by screwing on the SAE flange with the following screws:

6 screws (**1, 2, 3, 4, 5, 8**) _____ length B1+B2+B3
2 screws (**6, 7**) _____ length B3+B4

Tighten the screws in two steps in the specified sequence from 1 to 8 (see following scheme).

In the first step, the screws must be tightened with half the tightening torque, and in the second step with the maximum tightening torque (see following table).

Thread	Strength class	Tightening torque [Nm]
M6 x 1 (tacking screw)	10.9	15.5
M10	10.9	75
M12	10.9	130
M14	10.9	205

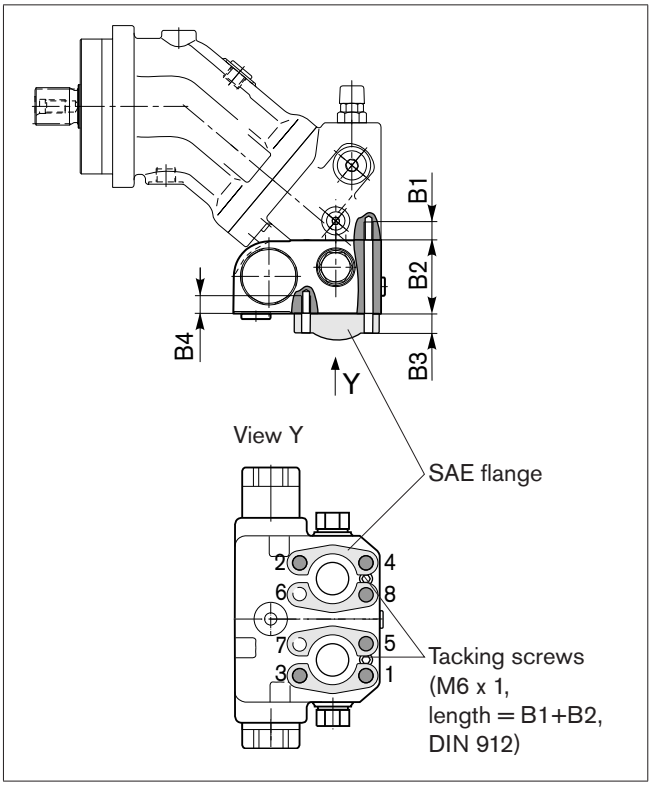

Size	28, 32, 45	56, 63	80, 90	107, 125, 160, 180	107, 125
Port plate	18				17
B1[1)]	M10 x 1.5; 17 deep	M10 x 1.5; 17 deep	M12 x 1.75; 18 deep	M14 x 2; 19 deep	M12 x 1.75; 17 deep
B2	78[2)]	68	68	85	68
B3	customer-specific				
B4	M10 x 1.5; 15 deep	M10 x 1.5; 15 deep	M12 x 1.75; 16 deep	M14 x 2; 19 deep	M12 x 1.75; 17 deep

1) Minimum required thread reach 1 x ø-thread
2) Including sandwich plate

Speed sensors

Before finalizing your design, request a binding installation drawing. Dimensions in mm.

The versions A2FM...U and A2FM...F ("prepared for speed sensor", i.e. without sensor) is equipped with a toothed ring on the rotary group.

On deliveries "prepared for speed sensor", the port is plugged with a pressure-resistant cover.

With the DSA or HDD speed sensor mounted a signal proportional to motor speed can be generated.
The sensors measures the speed and direction of rotation.

Ordering code, technical data, dimensions and details on the connector, plus safety information about the sensor can be found in the relevant data sheet.

DSA _____ RE 95133

HDD _____ RE 35135

The sensor is mounted at the specially provided port D as follows:

DSA _____ with one mounting bolt

HDD _____ with two mounting bolts

We recommend ordering the A2FM fixed motor complete with sensor mounted.

Version "V"
Sizes 23 to 200 with DSA sensor

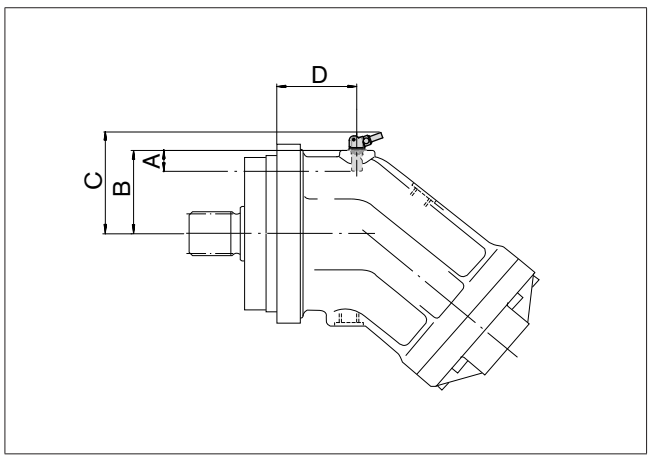

Version "V"
Sizes 250 to 500 with DSA sensor

On request

Version "H"
Sizes 250 to 500 with HDD sensor

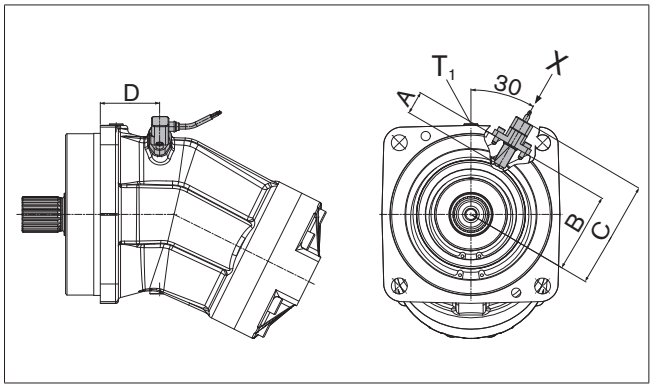

View X

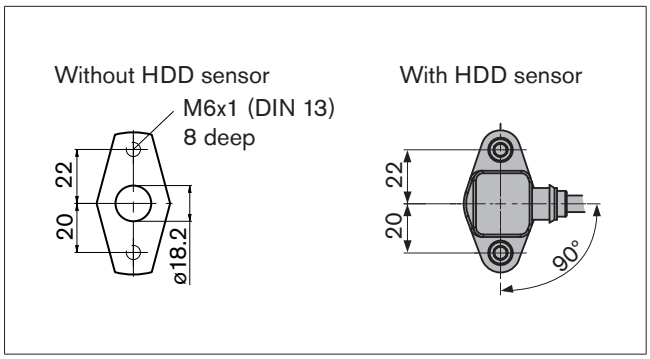

Speed sensors

Before finalizing your design, request a binding installation drawing. Dimensions in mm.

Size			23, 28, 32	45	56, 63	80, 90	107, 125
Number of teeth			38	45	47	53	59
DSA	A	Insertion depth (tolerance ± 0.1)	18.4	18.4	18.4	18.4	18.4
	B	Contact surface	57.9	64.9	69.9	74.9	79.9
	C		74.5	81.5	86.5	91.5	96.5
	D		54.7	54.3	61.5	72.5	76.8

Size			160, 180	200	250	355	500
Number of teeth			67	80	78	90	99
HDD	A	Insertion depth (tolerance ± 0.1)	–	–	32	32	32
	B	Contact surface	–	–	110.5	122.5	132.5
	C		–	–	149	161	171
	D		–	–	82	93	113
DSA	A	Insertion depth (tolerance ± 0.1)	18.4	18.4	32	32	32
	B	Contact surface	87.4	100.9	–	–	–
	C		104	117.5	–	–	–
	D		86.8	97.5			

Installation instructions

General

During commissioning and operation, the axial piston unit must be filled with hydraulic fluid and air bled. This must also be observed following a relatively long standstill as the axial piston unit may drain back to the reservoir via the hydraulic lines.

Particularly in the installation position "drive shaft upwards" filling and air bleeding must be carried out completely as there is, for example, a danger of dry running.

The case drain fluid in the motor housing must be directed to the reservoir via the highest available drain port (T_1, T_2).

For combinations of multiple units, make sure that the respective case pressure in each unit is not exceeded. In the event of pressure differences at the drain ports of the units, the shared drain line must be changed so that the minimum permissible case pressure of all connected units is not exceeded in any situation. If this is not possible, separate drain lines must be laid if necessary.

To achieve favorable noise values, decouple all connecting lines using elastic elements and avoid above-reservoir installation.

In all operating conditions, the drain line must flow into the reservoir below the minimum fluid level.

Installation position

See the following examples 1 to 8.
Further installation positions are possible upon request.

Recommended installation positions: 1 and 2.

Note
With sizes 10 to 200 with installation position "shaft upward", an air-bleed port R is required (state in plain text when ordering - special version). With sizes 250 to 1000, port U is provided as standard in the area near the bearings for air bleeding.

Installation position	Air bleed	Filling
1	–	T_1
2	–	T_2
3	–	T_1
4	R (U)	T_2
5	L_1	T_1 (L_1)
6	L_1	T_2 (L_1)
7	L_1	T_1 (L_1)
8	R (U)	T_2 (L_1)

L_1	Filling / air bleed
R	Air bleed port (special version)
U	Bearing flushing / air bleed port
T_1, T_2	Drain port
$h_{t\,min}$	Minimum required immersion depth (200 mm)
h_{min}	Minimum required spacing to reservoir bottom (100 mm)

Below-reservoir installation (standard)

Below-reservoir installation means that the axial piston unit is installed outside of the reservoir below the minimum fluid level.

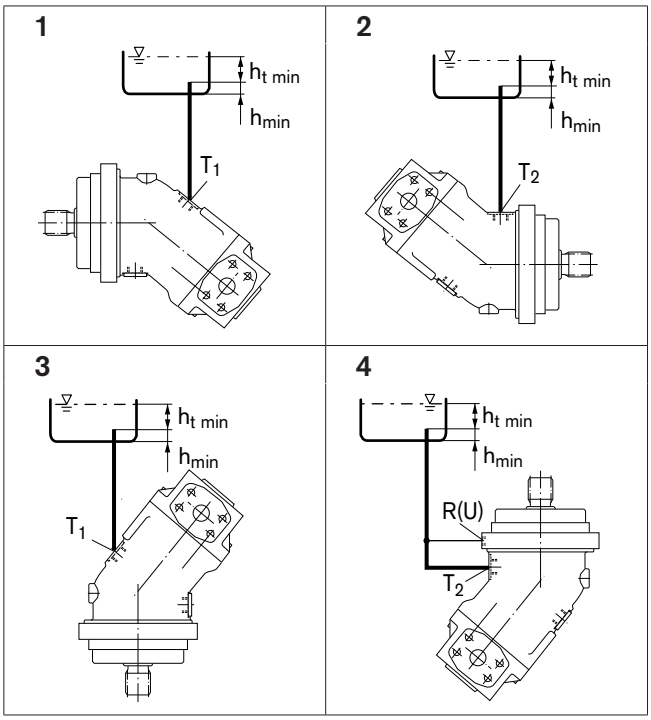

Above-reservoir installation

Above-reservoir installation means that the axial piston unit is installed above the minimum fluid level of the reservoir.

Recommendation for installation position 8 (drive shaft upward): A check valve in the drain line (cracking pressure 0.5 bar) can prevent draining of the motor housing.

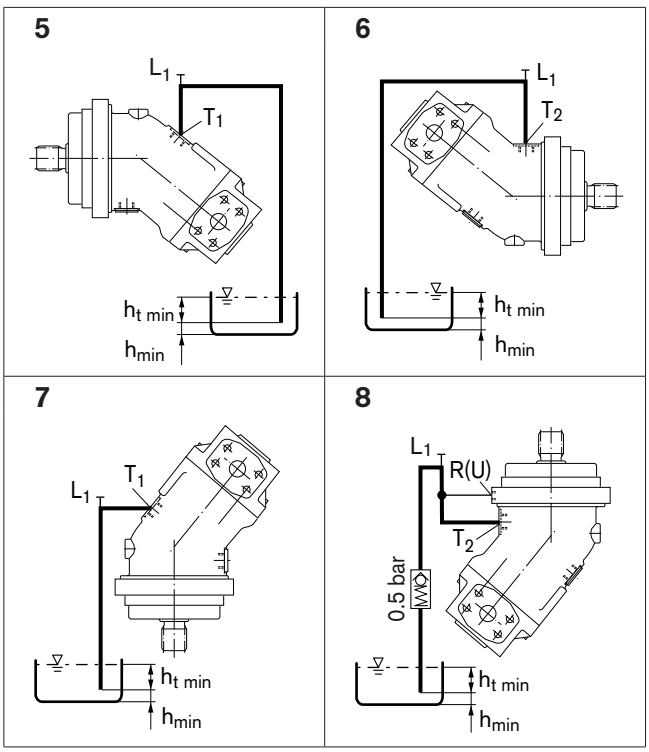

General instructions

– The motor A2FM is designed to be used in open and closed circuits.

– The project planning, installation and commissioning of the axial piston unit requires the involvement of qualified personnel.

– Before using the axial piston unit, please read the corresponding instruction manual completely and thoroughly. If necessary, these can be requested from Bosch Rexroth.

– During and shortly after operation, there is a risk of burns on the axial piston unit. Take appropriate safety measures (e. g. by wearing protective clothing).

– Depending on the operating conditions of the axial piston unit (operating pressure, fluid temperature), the characteristic may shift.

– Service line ports:

  - The ports and fastening threads are designed for the specified maximum pressure. The machine or system manufacturer must ensure that the connecting elements and lines correspond to the specified application conditions (pressure, flow, hydraulic fluid, temperature) with the necessary safety factors.

  - The service line ports and function ports can only be used to accommodate hydraulic lines.

– The data and notes contained herein must be adhered to.

– The product is not approved as a component for the safety concept of a general machine according to ISO 13849.

– The following tightening torques apply:

  - Fittings:
    Observe the manufacturer's instructions regarding tightening torques of the fittings used.

  - Mounting bolts:
    For mounting bolts with metric ISO thread according to DIN 13 or with thread according to ASME B1.1, we recommend checking the tightening torque in individual cases in accordance with VDI 2230.

  - Female threads in the axial piston unit:
    The maximum permissible tightening torques $M_{G\ max}$ are maximum values for the female threads and must not be exceeded. For values, see the following table.

  - Threaded plugs:
    For the metallic threaded plugs supplied with the axial piston unit, the required tightening torques of threaded plugs M_V apply. For values, see the following table.

Ports		**Maximum permissible tightening torque of the female threads $M_{G\ max}$**	**Required tightening torque of the threaded plugs M_V[1)]**	**WAF hexagon socket of the threaded plugs**
Standard	**Size of thread**			
DIN 3852[1)]	M10 x 1	30 Nm	15 Nm[2)]	5 mm
	M12 x 1.5	50 Nm	25 Nm[2)]	6 mm
	M14 x 1.5	80 Nm	35 Nm	6 mm
	M16 x 1.5	100 Nm	50 Nm	8 mm
	M18 x 1.5	140 Nm	60 Nm	8 mm
	M20 x 1.5	170 Nm	80 Nm	10 mm
	M22 x 1.5	210 Nm	80 Nm	10 mm
	M26 x 1.5	230 Nm	120 Nm	12 mm
	M27 x 2	330 Nm	135 Nm	12 mm
	M30 x 2	420 Nm	215 Nm	17 mm
	M33 x 2	540 Nm	225 Nm	17 mm
	M42 x 2	720 Nm	360 Nm	22 mm
DIN ISO 228	G 1/4	40 Nm	–	–

1) The tightening torques apply for screws in the "dry" state as received on delivery and in the "lightly oiled" state for installation.
2) In the "lightly oiled" state, the M_V is reduced to 10 Nm for M10 x 1 and 17 Nm for M12 x 1.5.

Fixed Plug-In Motor
A2FE

RE 91008/06.2012 1/24
Replaces: 09.07

Data sheet

Series 6

Size	Nominal pressure/Maximum pressure
28 to 180	400/450 bar
250 to 355	350/400 bar

Open and closed circuits

Contents

Ordering code for standard program	2
Technical data	4
Dimensions sizes 28 to 180	10
Dimensions size 250	12
Dimensions size 355	13
Flushing and boost pressure valve	14
Pressure-relief valve	16
Counterbalance valve BVD and BVE	18
Speed sensors	22
Installation instructions	23
General instructions	24

Features

- Fixed plug-in motor with axial tapered piston rotary group of bent-axis design, for hydrostatic drives in open and closed circuits
- Far-reaching integration in mechanical gearbox due to recessed mounting flange located in the center of the case (extremely space-saving construction)
- The output speed is dependent on the flow of the pump and the displacement of the motor
- The output torque increases with the pressure differential between the high-pressure and the low-pressure side.
- Small dimensions
- High total efficiency
- Complete unit, ready-assembled and tested
- Easy to install, simply plug into the mechanical gearbox
- No configuration specifications to be observed when installing

Ordering code for standard program

	A2F		E		/	6		W	–	V						
01	02	03	04	05		06	07	08		09	10	11	12	13	14	15

Hydraulic fluid

01	Mineral oil and HFD. HFD for sizes 250 and 355 only in combination with long-life bearings "L" (without code)		
	HFB, HFC hydraulic fluid	Sizes 28 to 180 (without code)	
		Sizes 250 to 355 (only in combination with long-life bearings "L")	**E-**

Axial piston unit

02	Bent-axis design, fixed	**A2F**

Drive shaft bearing

		28 to 180	250 to 355	
03	Standard bearing (without code)	●	●	
	Long-life bearing	–	●	**L**

Operating mode

04	Motor, plug-in version	**E**

Sizes (NG)

05	Geometric displacement, see table of values on page 7												
	28	**32**	**45**	**56**	**63**	**80**	**90**	**107**	**125**	**160**	**180**	**250**	**355**

Series

06		**6**

Index

07		NG28 to 180	**1**
		NG250 and 355	**0**

Direction of rotation

08	Viewed on drive shaft, bidirectional	**W**

Seals

09	FKM (fluor-caoutchouc)	**V**

	Drive shafts	**28**	**32**	**45**	**56**	**63**	**80**	**90**	**107**	**125**	**160**	**180**	**250**	**355**	
10	Splined shaft DIN 5480	●	●	–	●	●	●	●	●	●	●	●	–	–	**A**
		●	–	●	●	–	●	–	●	–	●	–	●	●	**Z**

Mounting flanges

			28 to 180	250 and 355	
11	ISO 3019-2	2-hole	●	–	**L**
		4-hole	–	●	**M**

● = Available ❍ = On request – = Not available = Preferred program

Ordering code for standard program

	A2F		E		/	6		W	–	V						
01	02	03	04	05		06	07	08		09	10	11	12	13	14	15

	Port plates[1]				28	32	45	56	63	80	90	107	125	160	180	250	355	
12	SAE flange ports A and B at rear		**01**	0	–	–	–	–	–	–	–	–	–	–	–	●	❍	**010**
				7	–	–	–	–	–	–	–	–	–	–	–	–	❍	**017**
	SAE flange ports A and B at side, opposite		**02**	0	–	–	–	–	–	–	–	–	–	–	–	●	❍	**020**
				7	–	–	●	▲	▲	▲	▲	●	●	●	●	●	–	**027**
				9	–	–	–	●	●	●	●	–	–	–	–	–	–	**029**
	SAE flange ports A and B at bottom (same side)		**10**	0	●	●	●	●	●	●	●	●	●	●	●	–	●	**100**
				7	–	–	–	–	–	–	–	–	–	–	–	–	●	**107**
	Port plate with 1-level pressure-relief valves for mounting a counterbalance valve[2]	BVD	**17**	1	–	–	–	–	–	–	–	●	●	–	–	–	–	**171** **178**
		BVD	**18**	8	●	●	●	●	●	●	●	●	●	●	●	–	–	**181**
		BVE	**18**		–	–	–	–	–	–	–	●	●	●	●	–[4]	–	**188**
	Port plate with pressure-relief valves		**19**	1	●	●	●	●	●	●	●	●	●	●	●	–	–	**191**
				2	●	●	●	●	●	●	●	●	●	●	●	–	–	**192**

Valves (see pages 14 to 21)

Without valve	**0**
Pressure-relief valve (without pressure boost facility)	**1**
Pressure-relief valve (with pressure boost facility)	**2**
Flushing and boost pressure valve, mounted	**7**
Counterbalance valve BVD/BVE mounted[2][3]	**8**
Flushing and boost pressure valve, integrated	**9**

	Speed sensor (see page 22)	**28 to 45**	**56 to 180**	**250**	**355**[4]	
13	Without speed sensor (without code)	●	●	●	●	
	Prepared for HDD speed sensor	–	▲	●	–	**F**
	HDD speed sensor mounted[5]	–	▲	●	–	**H**
	Prepared for DSA speed sensor	❍	❍	❍	–	**U**
	DSA speed sensor mounted[5]	❍	❍	❍	–	**V**

Special version (only sizes 28 to 180)

14	Standard version (without code)	
	Special version for slew drives (standard with port plate 19)	**J**

Standard / special version

15	Standard version (without code)	
	Standard version with installation variants, e. g. T ports against standard open or closed	**–Y**
	Special version	**–S**

● = Available ❍ = On request – = Not available ▲ = Not for new projects ▭ = Preferred program

1) Fastening thread or threaded ports, metric
2) Note the restrictions on page 19.
3) Specify ordering code of counterbalance valve according to data sheet (BVD – RE 95522, BVE – RE 95525) separately.
4) Please contact us.
5) Specify ordering code of sensor according to data sheet (DSA – RE 95133, HDD – RE 95135) separately and observe the requirements on the electronics

Technical data

Hydraulic fluid

Before starting project planning, please refer to our data sheets RE 90220 (mineral oil), RE 90221 (environmentally acceptable hydraulic fluids) and RE 90222 (HFD hydraulic fluids) and RE 90223 (HFA, HFB, HFC hydraulic fluids) for detailed information regarding the choice of hydraulic fluid and application conditions.

The plug-in motor A2FE is not suitable for operation with HFA hydraulic fluid. If HFB, HFC or HFD or environmentally acceptable hydraulic fluids are used, the limitations regarding technical data or other seals must be observed .

Selection diagram

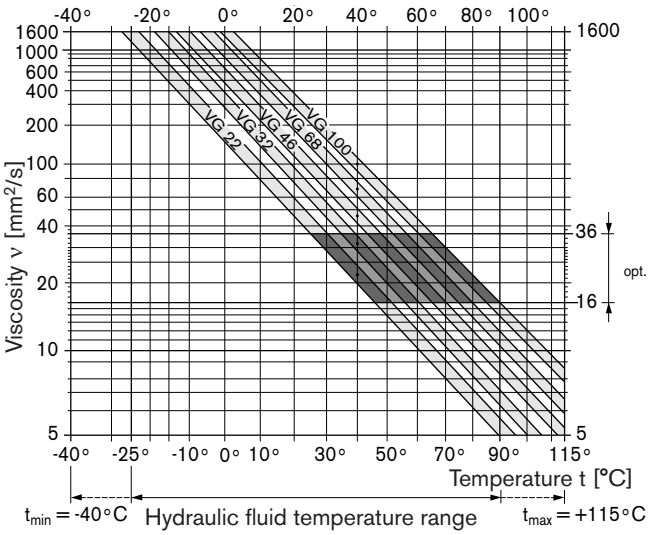

Details regarding the choice of hydraulic fluid

The correct choice of hydraulic fluid requires knowledge of the operating temperature in relation to the ambient temperature: in a closed circuit, the circuit temperature, in an open circuit, the reservoir temperature.

The hydraulic fluid should be chosen so that the operating viscosity in the operating temperature range is within the optimum range (ν_{opt}), see shaded area of the selection diagram. We recommended that the higher viscosity class be selected in each case.

Example: At an ambient temperature of X °C, an operating temperature of 60 °C is set in the circuit. In the optimum operating viscosity range ($\nu_{opt.}$, shaded area) this corresponds to the viscosity classes VG 46 or VG 68; to be selected: VG 68.

Note

The case drain temperature, which is affected by pressure and speed, can be higher than the circuit temperature or reservoir temperature. At no point of the component may the temperature be higher than 115 °C. The temperature difference specified below is to be taken into account when determining the viscosity in the bearing.

If the above conditions cannot be maintained due to extreme operating parameters, we recommend the use of a flushing and boost pressure valve (see page 14).

Viscosity and temperature of hydraulic fluid

	Viscosity [mm²/s]	Temperature	Comment
Transport and storage at ambient temperature		$T_{min} \geq$ -50 °C T_{opt} = +5 °C to +20 °C	factory preservation: up to 12 months with standard, up to 24 months with long-term
(Cold) start-up[1]	ν_{max} = 1600	$T_{St} \geq$ -40 °C	t ≤ 3 min, without load (p ≤ 50 bar), n ≤ 1000 rpm (for sizes 28 to 180) n ≤ 0.25 • n_{nom} (for sizes 250 and 355)
Permissible temperature difference		ΔT ≤ 25 K	between axial piston unit and hydraulic fluid
Warm-up phase	ν < 1600 to 400	T = -40 °C to -25 °C	at p ≤ 0.7 • p_{nom}, n ≤ 0.5 • n_{nom} and t ≤ 15 min
Operating phase			
Temperature difference		ΔT = approx. 12 K	between hydraulic fluid in the bearing and at port T.
Maximum temperature		115 °C	in the bearing
		103 °C	measured at port T
Continuous operation	ν = 400 to 10 ν_{opt} = 36 to 16	T = -25 °C to +90 °C	measured at port T, no restriction within the permissible data
Short-term operation[2]	$\nu_{min} \geq$ 7	T_{max} = +103 °C	measured at port T, t < 3 min, p < 0.3 • p_{nom}
FKM shaft seal[1]		T ≤ +115 °C	see page 5

1) At temperatures below -25 °C, an NBR shaft seal is required (permissible temperature range: -40 °C to +90 °C).
2) Sizes 250 and 355, please contact us.

Filtration of the hydraulic fluid

Finer filtration improves the cleanliness level of the hydraulic fluid, which increases the service life of the axial piston unit.

To ensure the functional reliability of the axial piston unit, a gravimetric analysis of the hydraulic fluid is necessary to determine the amount of solid contaminant and to determine the cleanliness level according to ISO 4406. A cleanliness level of at least 20/18/15 is to be maintained.

At very high hydraulic fluid temperatures (90 °C to maximum 115 °C), a cleanliness level of at least 19/17/14 according to ISO 4406 is necessary.

If the above classes cannot be achieved, please contact us.

Shaft seal

Permissible pressure loading

The service life of the shaft seal is influenced by the speed of the axial piston unit and the case drain pressure (case pressure). The mean differential pressure of 2 bar between the case and the ambient pressure may not be enduringly exceeded at normal operating temperature. For a higher differential pressure at reduced speed, see diagram. Momentary pressure spikes ($t < 0.1$ s) of up to 10 bar are permitted. The service life of the shaft seal decreases with an increase in the frequency of pressure spikes.

The case pressure must be equal to or higher than the ambient pressure.

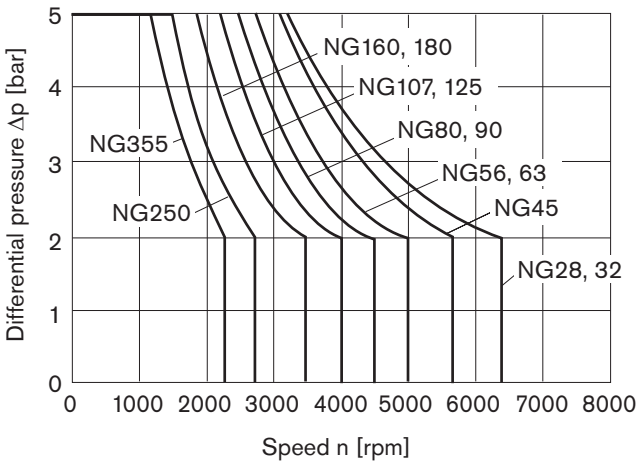

The values are valid for an ambient pressure $p_{abs} = 1$ bar.

Temperature range

The FKM shaft seal may be used for case drain temperatures from -25 °C to +115 °C.

Note
For application cases below -25 °C, an NBR shaft seal is required (permissible temperature range: -40 °C to +90 °C). State NBR shaft seal in plain text when ordering.
Please contact us.

Direction of flow

Direction of rotation, viewed on drive shaft	
clockwise	**counter-clockwise**
A to **B**	**B** to **A**

Speed range

No limit to minimum speed n_{min}. If uniformity of motion is required, speed n_{min} must not be less than 50 rpm. See table of values on page 7 for maximum speed.

Long-life bearing

Sizes 250 and 355

For long service life and use with HF hydraulic fluids. Identical external dimensions as motor with standard bearings. Subsequent conversion to long-life bearings is possible.

Operating pressure range
(operating with mineral oil)

Pressure at service line port A or B

Sizes 28 to 180

Nominal pressure p_{nom} _____ 400 bar absolute

Maximum pressure p_{max} _____ 450 bar absolute
Single operating period_____ 10 s
Total operating period _____ 300 h

Summation pressure (pressure A + pressure B) p_{Su} 700 bar

Sizes 250 and 355

Nominal pressure p_{nom} _____ 350 bar absolute

Maximum pressure p_{max} _____ 400 bar absolute
Single operating period_____ 10 s
Total operating period _____ 300 h

Summation pressure (pressure A + pressure B) p_{Su} _ 700 bar

Minimum pressure (high-pressure side) ___25 bar absolute

Rate of pressure change $R_{A\ max}$
with integrated pressure-relief valve_____ 9000 bar/s
without pressure-relief valve _____ 16000 bar/s

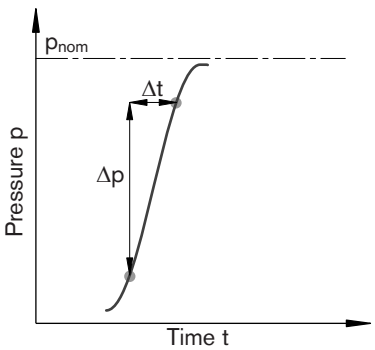

Note
Values for other hydraulic fluids, please contact us.

Minimum pressure – pump mode (inlet)
To prevent damage to the axial piston motor in pump operating mode (change of high-pressure side with unchanged direction of rotation, e. g. when braking), a minimum pressure must be guaranteed at the service line port (inlet). The minimum pressure depends on the speed of the axial piston unit (see characteristic curve below).

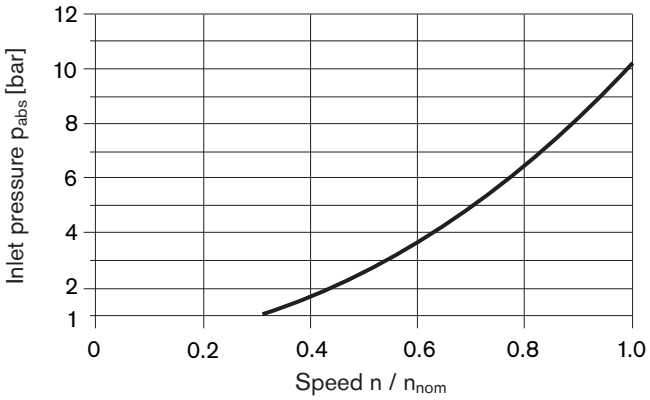

This diagram is valid only for the optimum viscosity range from ν_{opt} = 36 to 16 mm²/s.
Please contact us if these conditions cannot be satisfied.

Definition

Nominal pressure p_{nom}
The nominal pressure corresponds to the maximum design pressure.

Maximum pressure p_{max}
The maximum pressure corresponds to the maximum operating pressure within the single operating period. The sum of the single operating periods must not exceed the total operating period.

Minimum pressure (high-pressure side)
Minimum pressure at the high-pressure side (A or B) which is required in order to prevent damage to the axial piston unit.

Summation pressure p_{Su}
The summation pressure is the sum of the pressures at both service line ports (A and B).

Rate of pressure change R_A
Maximum permissible rate of pressure rise and reduction during a pressure change over the entire pressure range.

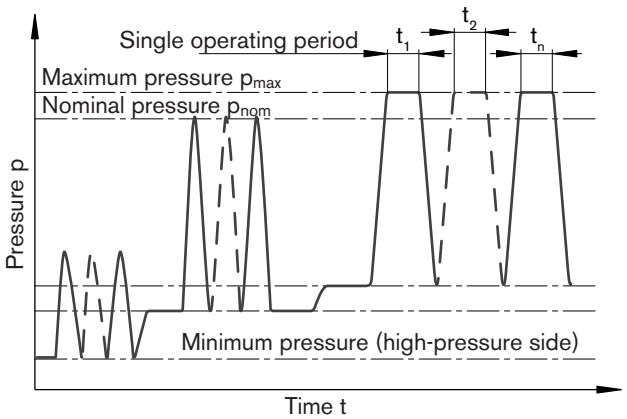

Total operating period = $t_1 + t_2 + \ldots + t$

Technical data

Table of values (theoretical values, without efficiency and tolerances; values rounded)

Size		NG		28	32	45	56	63	80
Displacement geometric, per revolution		V_g	cm^3	28.1	32	45.6	56.1	63	80.4
Speed maximum[1]		n_{nom}	rpm	6300	6300	5600	5000	5000	4500
		n_{max}[2]	rpm	6900	6900	6200	5500	5500	5000
Input flow[3]									
at n_{nom} and V_g		q_v	L/min	177	202	255	281	315	362
Torque[4]									
at V_g and	$\Delta p = 350$ bar	T	Nm	157	178	254	313	351	448
	$\Delta p = 400$ bar	T	Nm	179	204	290	357	401	512
Rotary stiffness		c	kNm/rad	2.93	3.12	4.18	5.94	6.25	8.73
Moment of inertia for rotary group		J_{GR}	kgm^2	0.0012	0.0012	0.0024	0.0042	0.0042	0.0072
Maximum angular acceleration		α	rad/s^2	6500	6500	14600	7500	7500	6000
Case volume		V	L	0.20	0.20	0.33	0.45	0.45	0.55
Mass (approx.)		m	kg	10.5	10.5	15	18	19	23

Size		NG		90	107	125	160	180	250	355
Displacement geometric, per revolution		V_g	cm^3	90	106.7	125	160.4	180	250	355
Speed maximum[1]		n_{nom}	rpm	4500	4000	4000	3600	3600	2700	2240
		n_{max}[2]	rpm	5000	4400	4400	4000	4000	–	–
Input flow3[3]										
at n_{nom} and V_g		q_v	L/min	405	427	500	577	648	675	795
Torque[4]										
at V_g and	$\Delta p = 350$ bar	T	Nm	501	594	696	893	1003	1393	1978
	$\Delta p = 400$ bar	T	Nm	573	679	796	1021	1146	–	–
Rotary stiffness		c	kNm/rad	9.14	11.2	11.9	17.4	18.2	73.1	96.1
Moment of inertia for rotary group		J_{GR}	kgm^2	0.0072	0.0116	0.0116	0.0220	0.0220	0.061	0.102
Maximum angular acceleration		α	rad/s^2	6000	4500	4500	3500	3500	10000	8300
Case volume		V	L	0.55	0.8	0.8	1.1	1.1	2.5	3.5
Mass (approx.)		m	kg	25	34	36	47	48	82	110

1) The values are valid:
- for the optimum viscosity range from $\nu_{opt} = 36$ to 16 mm^2/s
- with hydraulic fluid based on mineral oils

2) Intermittent maximum speed: overspeed for unload and overhauling processes, $t < 5$ s and $\Delta p < 150$ bar

3) Restriction of input flow with counterbalance valve, see page 19

4) Torque without radial force, with radial force see page 8

Note

Operation above the maximum values or below the minimum values may result in a loss of function, a reduced service life or in the destruction of the axial piston unit. Other permissible limit values, with respect to speed variation, reduced angular acceleration as a function of the frequency and the permissible start up angular acceleration (lower than the maximum angular acceleration) can be found in data sheet RE 90261.

Technical data

Permissible radial and axial forces of the drive shafts

(splined shaft and parallel keyed shaft)

Size	NG		28	28	32	45	56	56[4]	56
Drive shaft	ø	mm	25	30	30	30	30	30	35
Maximum radial force[1] at distance a (from shaft collar) 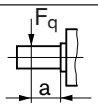	$F_{q\ max}$	kN	5.7	5.4	5.4	7.6	9.5	7.8	9.1
	a	mm	16	16	16	18	18	18	18
with permissible torque	T_{max}	Nm	179	179	204	290	357	294	357
≙ permissible pressure Δp	Δp_{perm}	bar	400	400	400	400	400	330	400
Maximum axial force[2] 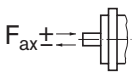	$+F_{ax\ max}$	N	500	500	500	630	800	800	800
	$-F_{ax\ max}$	N	0	0	0	0	0	0	0
Permissible axial force per bar operating pressure	$\pm F_{ax\ perm/bar}$	N/bar	5.2	5.2	5.2	7.0	8.7	8.7	8.7

Size	NG		63	80	80[4]	80	90	107	107
Drive shaft	ø	mm	35	35	35	40	40	40	45
Maximum radial force[1] at distance a (from shaft collar) 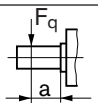	$F_{q\ max}$	kN	9.1	11.6	11.1	11.4	11.4	13.6	14.1
	a	mm	18	20	20	20	20	20	20
with permissible torque	T_{max}	Nm	401	512	488	512	573	679	679
≙ permissible pressure Δp	Δp_{perm}	bar	400	400	380	400	400	400	400
Maximum axial force[2] 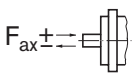	$+F_{ax\ max}$	N	800	1000	1000	1000	1000	1250	1250
	$-F_{ax\ max}$	N	0	0	0	0	0	0	0
Permissible axial force per bar operating pressure	$\pm F_{ax\ perm/bar}$	N/bar	8.7	10.6	10.6	10.6	10.6	12.9	12.9

Size	NG		125	160	160	180	250	355
Drive shaft	ø	mm	45	45	50	50	50	60
Maximum radial force[1] at distance a (from shaft collar) 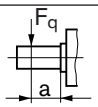	$F_{q\ max}$	kN	14.1	18.1	18.3	18.3	1.2[5]	1.5[5]
	a	mm	20	25	25	25	41	52.5
with permissible torque	T_{max}	Nm	796	1021	1021	1146	[3]	[3]
≙ permissible pressure Δp	Δp_{perm}	bar	400	400	400	400	[3]	[3]
Maximum axial force[2] 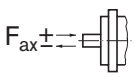	$+F_{ax\ max}$	N	1250	1600	1600	1600	2000	2500
	$-F_{ax\ max}$	N	0	0	0	0	0	0
Permissible axial force per bar operating pressure	$\pm F_{ax\ perm/bar}$	N/bar	12.9	16.7	16.7	16.7	[3]	[3]

1) With intermittent operation
2) Maximum permissible axial force during standstill or when the axial piston unit is operating in non-pressurized condition.
3) Please contact us.
4) Restricted technical data only for splined shaft
5) When at a standstill or when axial piston unit operating in non-pressurized conditions. Higher forces are permissible when under pressure, please contact us.

Note

Influence of the direction of the permissible axial force:

$+F_{ax\ max}$ = Increase in service life of bearings

$-F_{ax\ max}$ = Reduction in service life of bearings (avoid)

Technical data

Effect of radial force F_q on the service life of bearings

By selecting a suitable direction of radial force F_q, the load on the bearings, caused by the internal rotary group forces can be reduced, thus optimizing the service life of the bearings. Recommended position of mating gear is dependent on direction of rotation. Examples:

	Toothed gear drive	V-belt output
NG	φ_{opt}	φ_{opt}
28 to 180	± 70°	± 45°
250 and 355	± 45°	± 70°

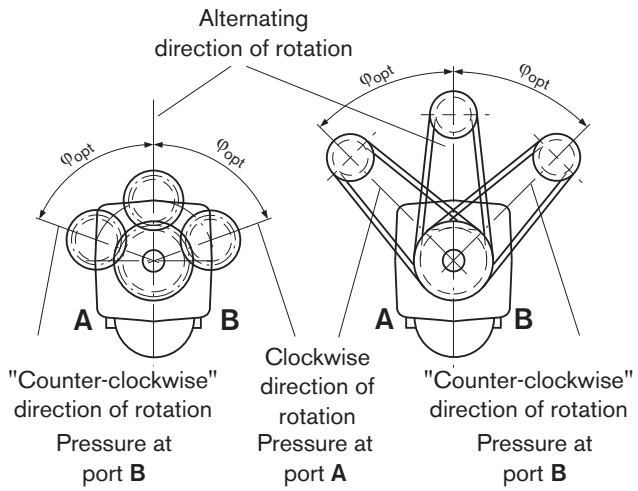

Determining the operating characteristics

Input flow $q_v = \dfrac{V_g \cdot n}{1000 \cdot \eta_v}$ [L/min]

Speed $n = \dfrac{q_V \cdot 1000 \cdot \eta_v}{V_g}$ [min^{-1}]

Torque $T = \dfrac{V_g \cdot \Delta p \cdot \eta_{mh}}{20 \cdot \pi}$ [Nm]

Power $P = \dfrac{2\,\pi \cdot T \cdot n}{60000} = \dfrac{q_v \cdot \Delta p \cdot \eta_t}{600}$ [kW]

V_g = Displacement per revolution in cm^3

Δp = Differential pressure in bar

n = Speed in rpm

η_v = Volumetric efficiency

η_{mh} = Mechanical-hydraulic efficiency

η_t = Total efficiency ($\eta_t = \eta_v \cdot \eta_{mh}$)

Dimensions sizes 28 to 180

Before finalizing your design, request a binding installation drawing. Dimensions in mm.

Port plate 10 – SAE flange ports at bottom

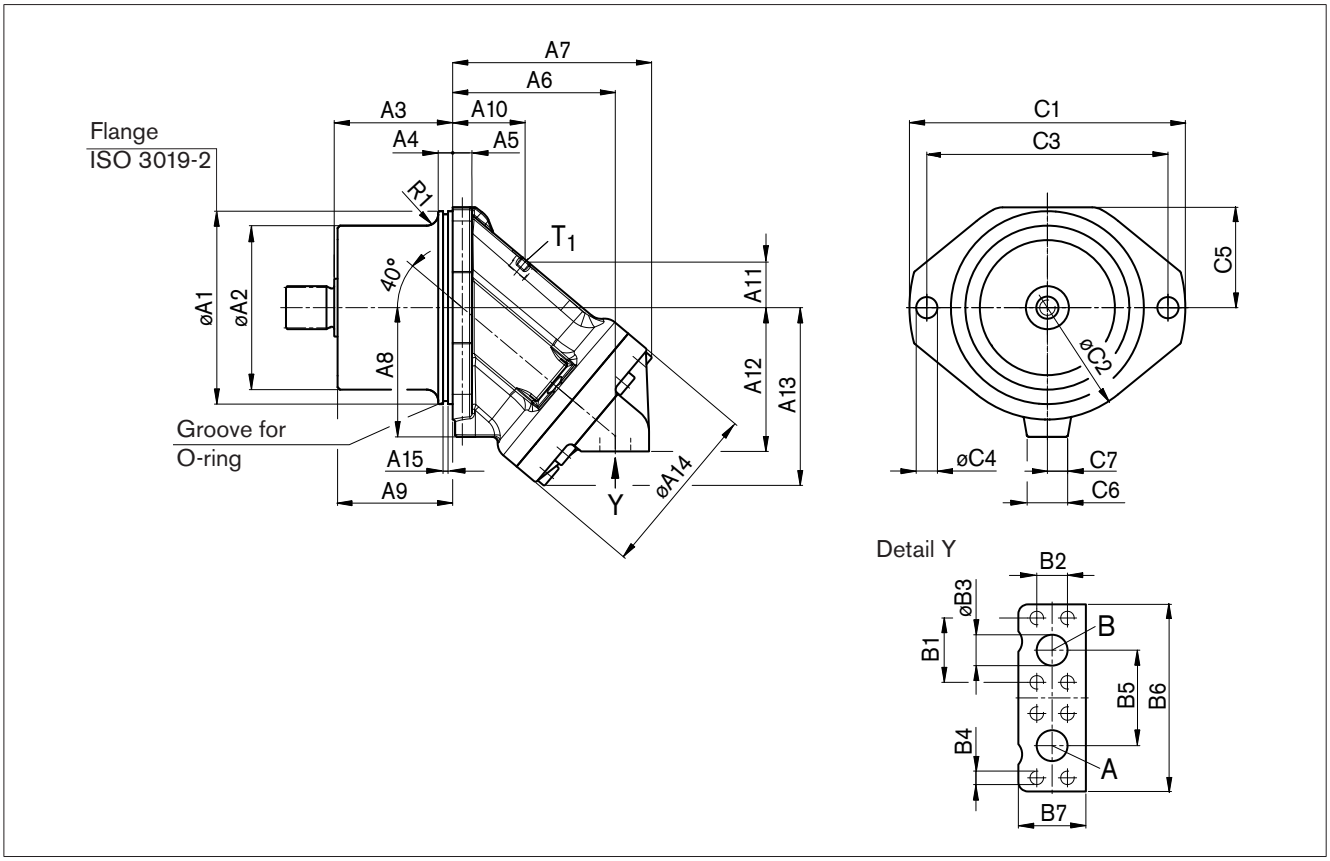

Size	øA1	øA2	A3[1]	A4	A5	A6	A7	A8	A9	A10	A11	A12	A13	øA14	A15
28, 32	$135_{-0.025}$	$94_{-0.5}$	88.8	15	16	94	114	95	87.1	45	27	91	106	106	5.2
45	$160_{-0.025}$	$117^{+1.5}_{-2}$	92.3	15	18	109	133	106	90	50	31.3	102	119	118	5.2
56, 63	$160_{-0.025}$	$121_{-0.5}$	92.3	15	18	122	146	109	90	59	34	107	130	128	5.2
80, 90	$190_{-0.029}$	$140.3_{-0.5}$	110	15	20	127	157	123	106	54	41	121	145	138	5.2
107, 125	$200_{-0.029}$	$152.3_{-0.5}$	122.8	15	20	143	178	135	119	58	41	136	157	150	5.2
160, 180	$200_{-0.029}$	$171.6_{-0.5}$	122.8	15	20	169	206	134	119.3	75	47	149	185	180	5.2

Size	B1	B2	øB3	B4, DIN 13[2]	B5	B6	B7	C1	øC2	C3	øC4	C5	C6	C7
28, 32	40.5	18.2	13	M8 x 1.25; 15 deep	59	115	40	188	154	160	14	71	42	13
45	50.8	23.8	19	M10 x 1.5; 17 deep	75	147	49	235	190	200	18	82	47.5	15
56, 63	50.8	23.8	19	M10 x 1.5; 17 deep	75	147	48	235	190	200	18	82	36	0
80, 90	57.2	27.8	25	M12 x 1.75; 17 deep	84	166	60	260	220	224	22	98	40	0
107, 125	66.7	31.8	32	M14 x 2; 19 deep	99	194	70	286	232	250	22	103	40	0
160, 180	66.7	31.8	32	M14 x 2; 19 deep	99	194	70	286	232	250	22	104	42	0

Size	R1	O-ring[3]	Service line port A, B SAE J518	Drain port T_1 DIN 3852[2]
28, 32	10	126 x 4	1/2 in	M16 x 1.5; 12 deep
45	10	150 x 4	3/4 in	M18 x 1.5; 12 deep
56, 63	10	150 x 4	3/4 in	M18 x 1.5; 12 deep
80, 90	10	180 x 4	1 in	M18 x 1.5; 12 deep
107, 125	16	192 x 4	1 1/4 in	M18 x 1.5; 12 deep
160, 180	12	192 x 4	1 1/4 in	M22 x 1.5; 14 deep

1) To shaft collar
2) Observe the general instructions on page 24 for the maximum tightening torques.
3) Not included in the delivery contents

Note

Port plates 17, 18 and 19; see pages 17 and 20.

Dimensions sizes 28 to 180

Before finalizing your design, request a binding installation drawing. Dimensions in mm.

Drive shaft

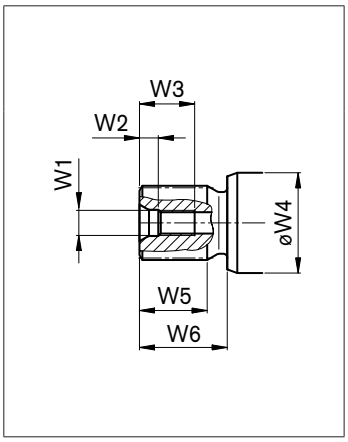

Size	Splined shaft (DIN 5480)	W1 [1]	W2	W3	øW4	W5	W6
28, 32	**A** W30 x 2 x 14 x 9g	M10 x 1.5	7.5	22	35	27	35
28	**Z** W25 x 1.25 x 18 x 9g	M8 x 1.25	6	19	35	28	43
45	**Z** W30 x 2 x 14 x 9g	M12 x 1.75	9.5	28	35	27	35
56, 63	**A** W35 x 2 x 16 x 9g	M12 x 1.75	9.5	28	40	32	40
56	**Z** W30 x 2 x 14 x 9g	M12 x 1.75	9.5	28	40	27	35
80, 90	**A** W40 x 2 x 18 x 9g	M16 x 2	12	36	45	37	45
80	**Z** W35 x 2 x 16 x 9g	M12 x 1.75	9.5	28	45	32	40
107, 125	**A** W45 x 2 x 21 x 9g	M16 x 2	12	36	50	42	50
107	**Z** W40 x 2 x 18 x 9g	M12 x 1.75	9.5	28	50	37	45
160, 180	**A** W50 x 2 x 24 x 9g	M16 x 2	12	36	60	44	55
160	**Z** W45 x 2 x 21 x 9g	M16 x 2	12	36	60	42	50

1) Center bore according to DIN 332 (thread according to DIN 13), observe the general instructions on page 24 for the maximum tightening torques.

Dimensions size 250

Before finalizing your design, request a binding installation drawing. Dimensions in mm.

Port plate 01 – SAE flange ports at rear

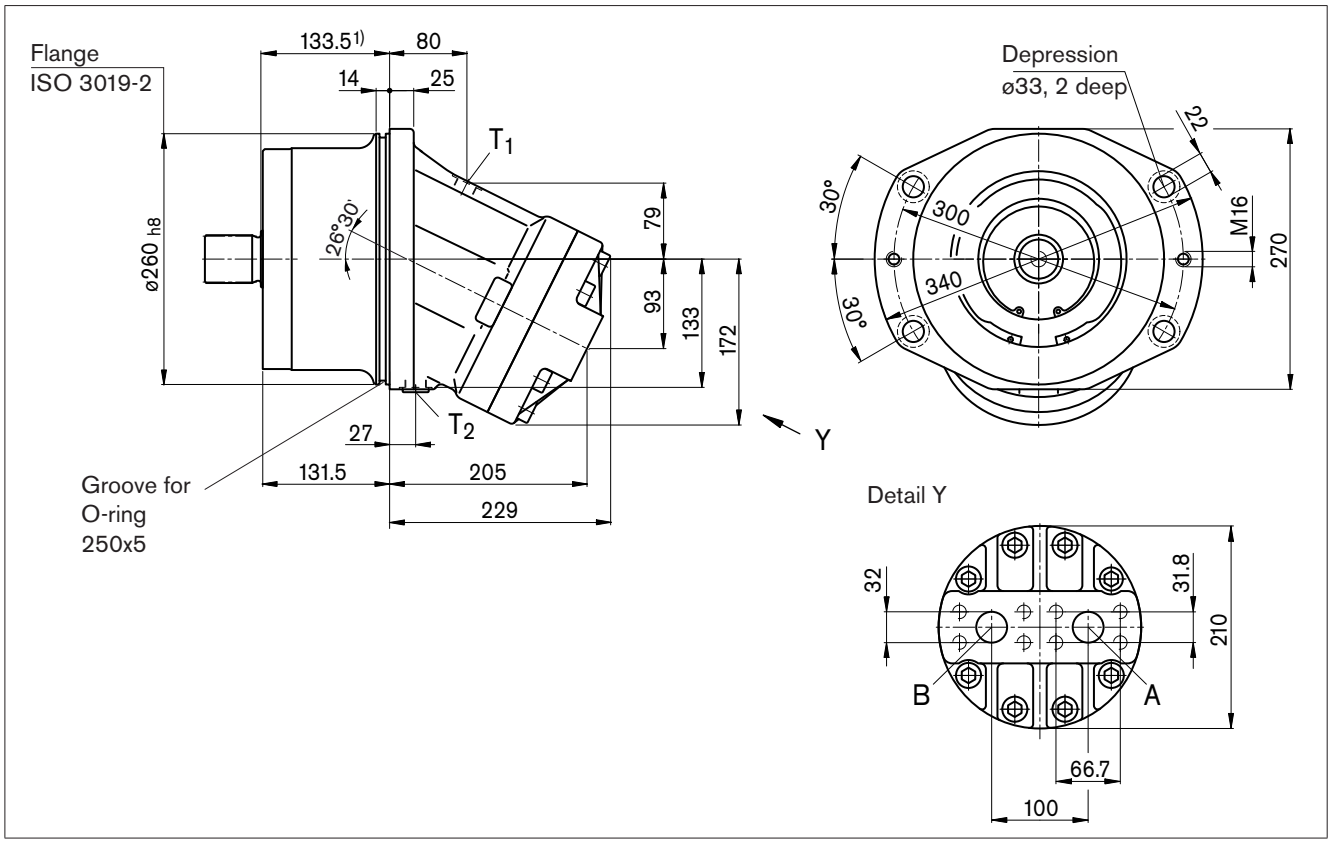

Drive shaft

Z Splined shaft DIN 5480
W50x2x24x9g

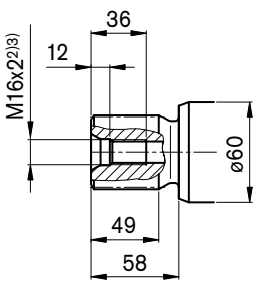

Port plate 02 – SAE flange ports at side

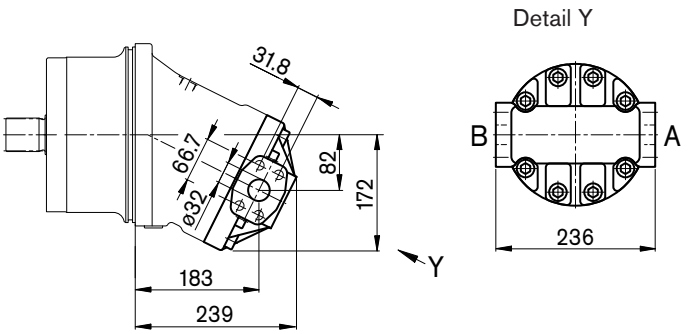

Ports

Designation	Port for	Standard	Size[3)]	Maximum pressure [bar][4)]	State[8)]
A, B	Service line fastening thread A/B	SAE J518[6)] DIN 13	1 1/4 in M14 x 2; 19 deep	400	O
T_1	Drain line	DIN 3852[7)]	M22 x 1.5; 14 deep	3	O[5)]
T_2	Drain line	DIN 3852[7)]	M22 x 1.5; 14 deep	3	X[5)]

1) To shaft collar
2) Center bore according to DIN 332 (thread according to DIN 13)
3) Observe the general instructions on page 24 for the maximum tightening torques.
4) Momentary pressure spikes may occur depending on the application. Keep this in mind when selecting measuring devices and fittings.
5) Depending on installation position, T_1 or T_2 must be connected (see also installation instructions on page 23).
6) Only dimensions according to SAE J518, metric fastening thread is a deviation from standard.
7) The spot face can be deeper than specified in the appropriate standard.
8) O = Must be connected (plugged on delivery)
X = Plugged (in normal operation)

Dimensions size 355

Before finalizing your design, request a binding installation drawing. Dimensions in mm.

Port plate 10 – SAE flange ports at bottom

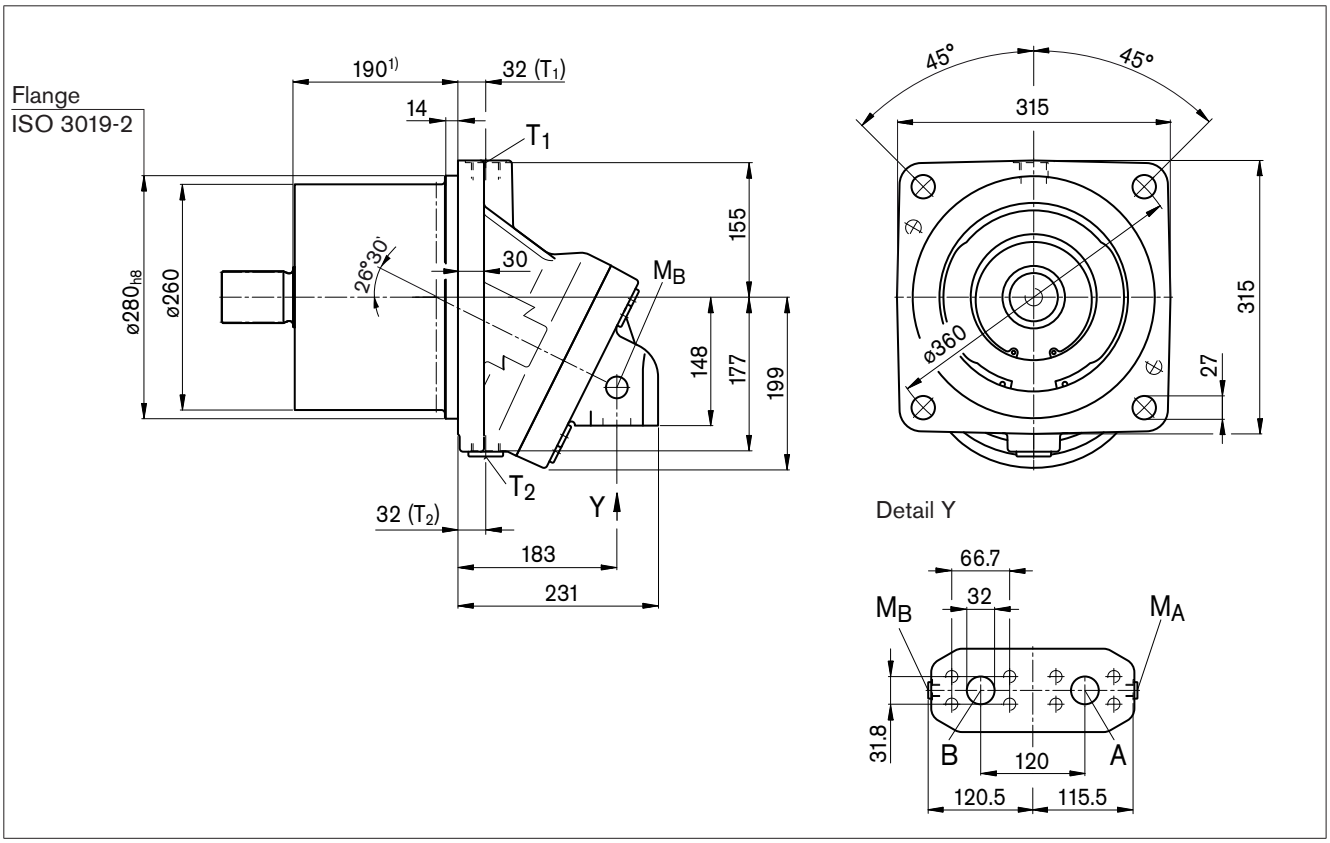

Drive shaft

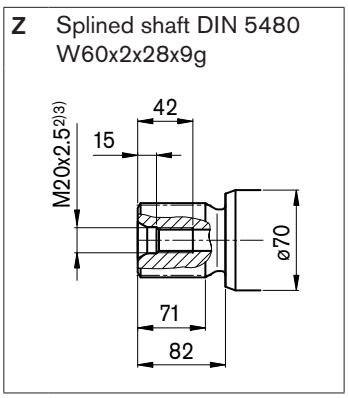

Ports

Designation	Port for	Standard	Size[3)]	Maximum pressure [bar][4)]	State[8)]
A, B	Service line fastening thread A/B	SAE J518[6)] DIN 13	1 1/4 in M14 x 2; 22 deep	400	O
T_1	Drain line	DIN 3852[7)]	M33 x 2; 18 deep	3	O[5)]
T_2	Drain line	DIN 3852[7)]	M33 x 2; 18 deep	3	X[5)]

1) To shaft collar
2) Center bore according to DIN 332 (thread according to DIN 13)
3) Observe the general instructions on page 24 for the maximum tightening torques.
4) Momentary pressure spikes may occur depending on the application. Keep this in mind when selecting measuring devcies and fittings.
5) Depending on installation position, T_1 or T_2 must be connected (see also installation instructions on page 23).
6) Only dimensions according to SAE J518, metric fastening thread is a deviation from standard.
7) The spot face can be deeper than specified in the appropriate standard.
8) O = Must be connected (plugged on delivery)
X = Plugged (in normal operation)

Flushing and boost pressure valve

Before finalizing your design, request a binding installation drawing. Dimensions in mm.

The flushing and boost pressure valve is used to remove heat from the hydraulic circuit.

In an open circuit, it is used only for flushing the housing.

In a closed circuit, it ensures a minimum boost pressure level in addition to the case flushing.

Hydraulic fluid is directed from the respective low pressure side into the motor housing. This is then fed into the reservoir, together with the case drain fluid. The hydraulic fluid, removed out of the closed circuit must be replaced by cooled hydraulic fluid from the boost pump.

With port plate 027 (sizes 45 to 180 and 250) and with port plate 107 (size 355), the valve is mounted directly on the fixed motor.

Cracking pressure of pressure retaining valve
(observe when setting the primary valve)
Sizes 45 to 355, fixed setting _____ 16 bar

Switching pressure of flushing piston Δp
Sizes 45 to 355 _____ 8±1 bar

Flushing flow q_v
Orifice (throttles with integrated valve) can be used to set the flushing flows as required.
Following parameters are based on:
$\Delta p_{ND} = p_{ND} - p_G = 25$ bar and $\nu = 10$ mm²/s
(p_{ND} = low pressure, p_G = case pressure)

Schematic

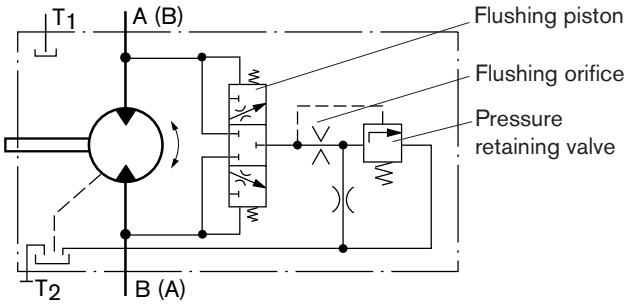

Standard flushing flows

Flushing and boost pressure valve, mounted (code 7)

Size	Flushing flow q_v [L/min]	ø [mm]	Mat. No. of orifice
45	3.5	1.2	R909651766
107, 125	8	1.8	R909419696
160, 180	10	2.0	R909419697
250	10	2.0	R909419697
355	16	2.5	R910803019

With sizes 45 to 180, orifices can be supplied for flushing flows from 3.5 to 10 L/min. For other flushing flows, please state the required flushing flow when ordering. The flushing flow without orifice is approx. 12 to 14 L at low pressure $\Delta p_{ND} = 25$ bar.

Flushing and boost pressure valve, integrated (code 9)

Size	Throttle ø [mm]	q_v [L/min]
56, 63, 80, 90	1.5	6
	1.8	7.3

Flushing and boost pressure valve

Before finalizing your design, request a binding installation drawing. Dimensions in mm.

Dimensions

Sizes 107 to 250
Port plate 027 – SAE flange ports at side

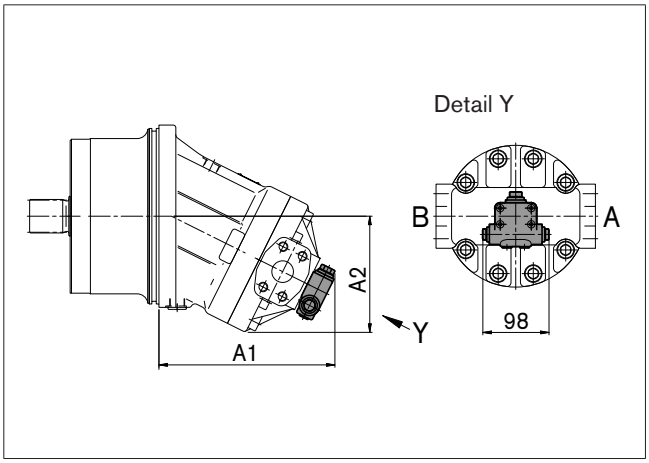

Size	A1	A2
107, 125	211	192
160, 180	232	201
250	260.5	172

Sizes 56 to 90
Port plate 029 – SAE flange ports at side

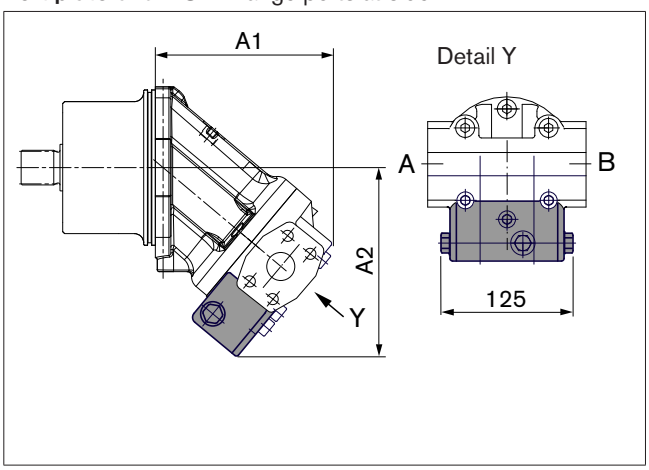

Size	A1	A2
56, 63	165	176
80, 90	178	186.7

1) DIN 13, observe the general instructions on page 24 for the maximum tightening torques.

Size 355
Port plate 017 – SAE flange ports at rear

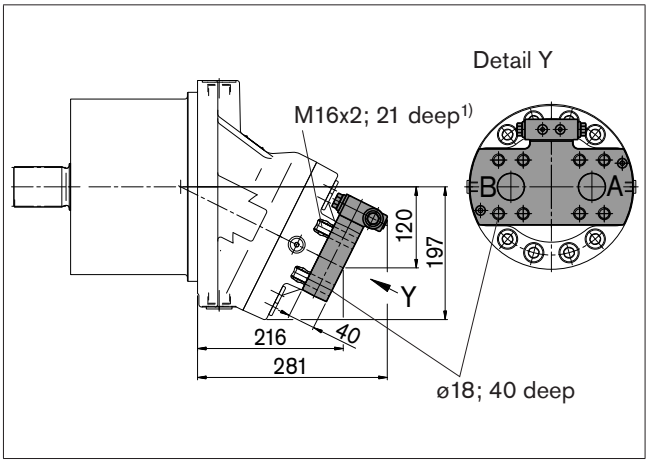

Port plate 107 – SAE flange ports at bottom

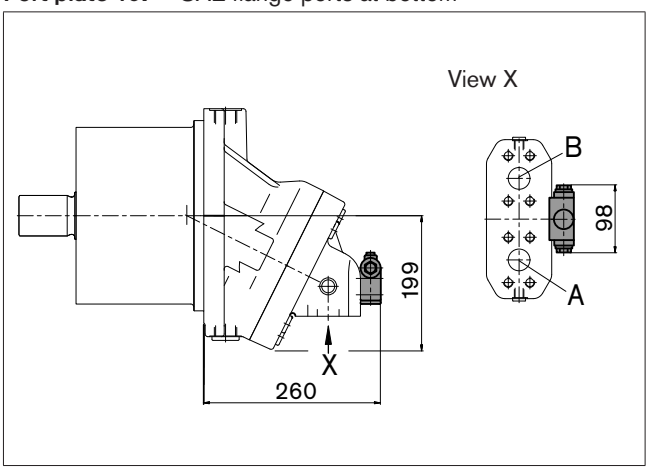

Pressure-relief valve

Before finalizing your design, request a binding installation drawing. Dimensions in mm.

The MHDB pressure-relief valves (see RE 64642) protect the hydraulic motor from overload. As soon as the set cracking pressure is reached, the hydraulic fluid flows from the high-pressure side to the low-pressure side.

The pressure-relief valves are only available in combination with port plates 181, 191 or 192 (counterbalance valve for mounting to port plate 181: see next page).

Cracking pressure setting range _____ 50 to 420 bar

With the version "with pressure boost facility" (192), a higher pressure setting can be realized by applying an external pilot pressure of 25 to 30 bar to port P_{St}.

When ordering, please state in plain text:

– Cracking pressure of pressure-relief valve

– Cracking pressure with pilot pressure applied to P_{St} (only with version 192)

Version without pressure boost facility "191"

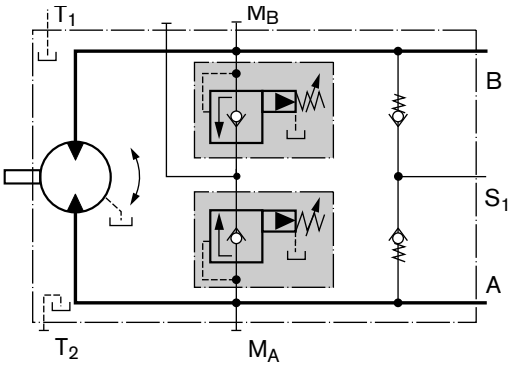

Version with pressure boost facility "192"

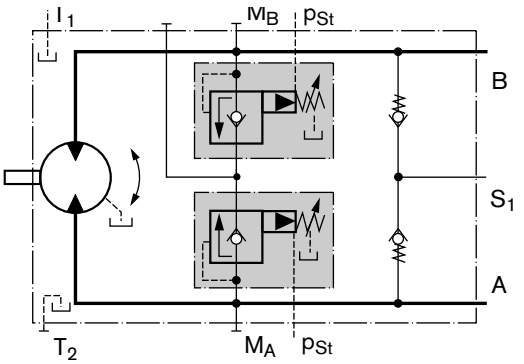

Pressure-relief valve

Before finalizing your design, request a binding installation drawing. Dimensions in mm.

Dimensions

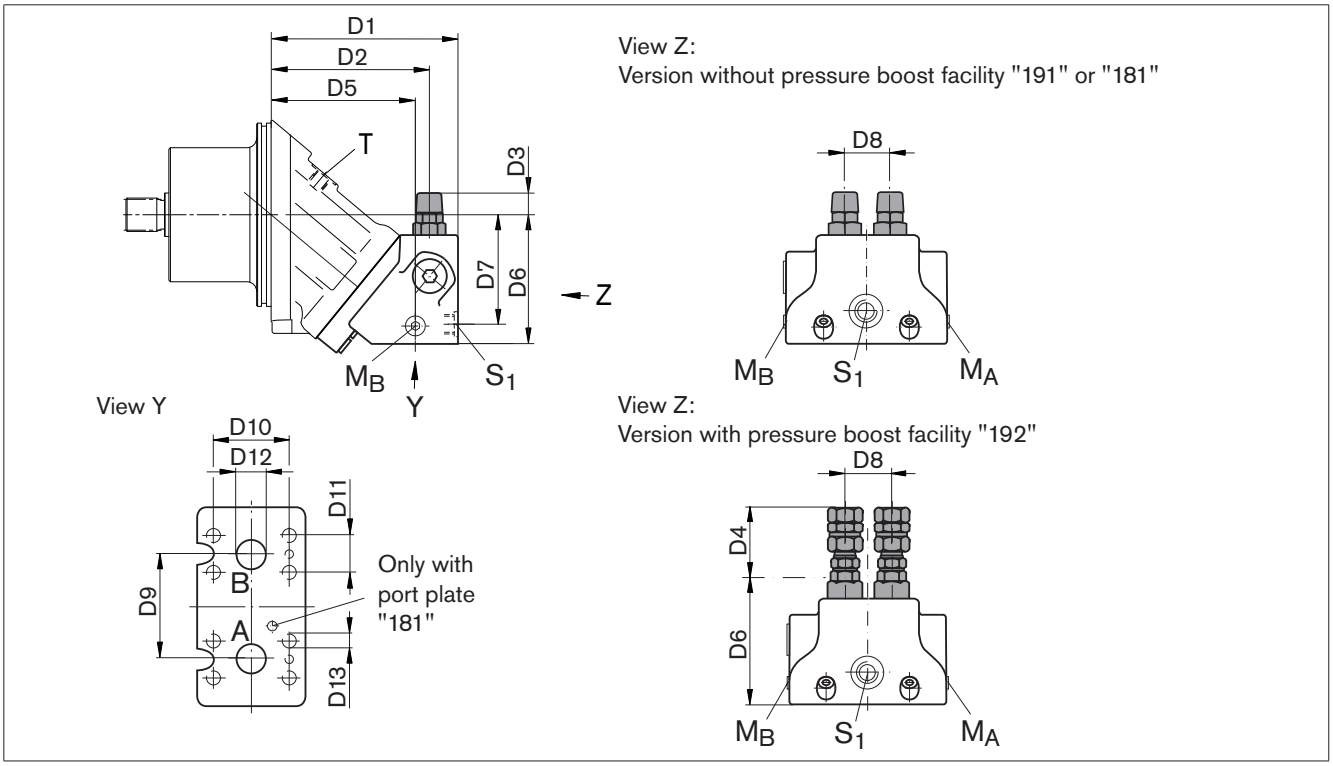

Size		D1	D2	D3	D4	D5	D6	D7	D8	D9	D10	D11	D12	D13[2]
28, 32	MHDB.**16**	145	122	25	68	110	102	87	36	66	50.8	23.8	ø19	M10; 17 deep
45	MHDB.**16**	161	137	22	65	126	113	98	36	66	50.8	23.8	ø19	M10; 17 deep
56, 63	MHDB.**22**	189	162	19	61	147	124	105	42	75	50.8	23.8	ø19	M10; 13 deep
80, 90	MHDB.**22**	193	165	17.5	59	151	134	114	42	75	57.2	27.8	ø25	M12; 18 deep
107, 125	MHDB.**32**	216	184	10	52	168	149.5	130	53	84	66.7	31.8	ø32	M14; 19 deep
160, 180	MHDB.**32**	249	218	5	47	202	170	149	53	84	66.7	31.8	ø32	M14; 19 deep

Size	A, B	S_1[1]	M_A, M_B[1]	P_{St}[1]
28, 32	3/4 in	M22 x 1.5; 14 deep	M20 x 1.5; 14 deep	G 1/4
45	3/4 in	M22 x 1.5; 14 deep	M20 x 1.5; 14 deep	G 1/4
56, 63	3/4 in	M26 x 1.5; 16 deep	M26 x 1.5; 16 deep	G 1/4
80, 90	1 in	M26 x 1.5; 16 deep	M26 x 1.5; 16 deep	G 1/4
107, 125	1 1/4 in	M26 x 1.5; 16 deep	M26 x 1.5; 16 deep	G 1/4
160, 180	1 1/4 in	M26 x 1.5; 16 deep	M30 x 1.5; 16 deep	G 1/4

Assembly instruction for port plate with pressure boost facility "192":
The lock nut must be counterheld when installing the hydraulic line at the p_{st} port!

Ports

Designation	Port for	Standard	Size	Maximum pressure [bar][2]	State [3]
A, B	Service line	SAE J518	See above	450	O
S_1	Supply (only with port plate 191/192)	DIN 3852	See above	5	O
M_A, M_B	Measuring operating pressure	DIN 3852	See above	450	X
P_{St}	Pilot pressure (only with port plate 192)	DIN ISO 228	See above	30	O

1) Observe the general instructions on page 24 for the maximum tightening torques.
2) Momentary pressure spikes may occur depending on the application. Keep this in mind when selecting measuring devices and fittings.
3) O = Must be connected (plugged on delivery)
X = Plugged (in normal operation)

Counterbalance valve BVD and BVE

Before finalizing your design, request a binding installation drawing. Dimensions in mm.

Function

Travel drive/winch counterbalance valves are designed to reduce the danger of overspeeding and cavitation of axial piston motors in open circuits. Cavitation occurs if the motor speed is greater than it should be for the given input flow while braking, travelling downhill, or lowering a load.

If the inlet pressure drops, the counterbalance spool throttles the return flow and brakes the motor until the inlet pressure returns to approx. 20 bar.

Note

– BVD available for sizes 28 to 180 and BVE available for sizes 107 to 180.

– The counterbalance valve must be ordered additionally. We recommend ordering the counterbalance valve and the motor as a set. Ordering example: A2FE90/61W–VAB**188** + BVD20F27S/41B–V03K16D0400S12

– The counterbalance valve does not replace the mechanical service brake and park brake.

– Observe the detailed notes on the BVD counterbalance valve in RE 95522 and BVE counterbalance valve in RE 95525!

– For the design of the brake release valve, we must know for the mechanical park brake:

- the pressure at the start of opening
- the volume of the counterbalance spool between minimum stroke (brake closed) and maximum stroke (brake released with 21 bar)
- the required closing time for a warm device (oil viscosity approx. 15 mm^2/s)

Travel drive counterbalance valve BVD...F

Application option

– Travel drive on wheeled excavators

Example schematic for travel drive on wheeled excavators
A2FE090/61W-VAB188 + BVD20F27S/41B–V03K16D0400S12

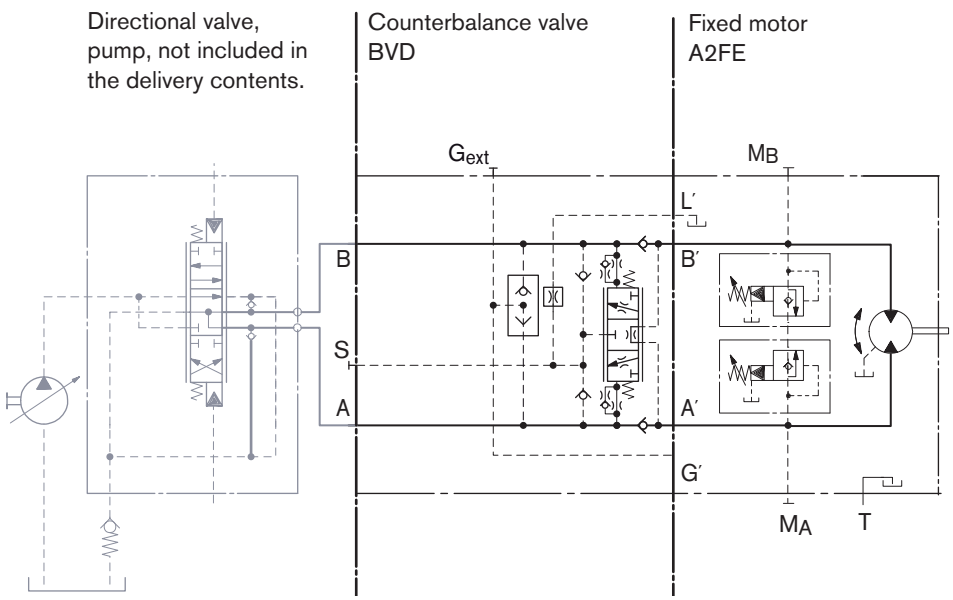

Counterbalance valve BVD and BVE

Before finalizing your design, request a binding installation drawing. Dimensions in mm.

Winch counterbalance valve BVD...W and BVE

Application options

– Winch drive in cranes (BVD and BVE)

– Track drive in excavator crawlers (BVD)

Example schematic for winch drive in cranes
A2FE090/61W-VAB188 + BVE25W385/51ND-V100K00D4599T30S00-0

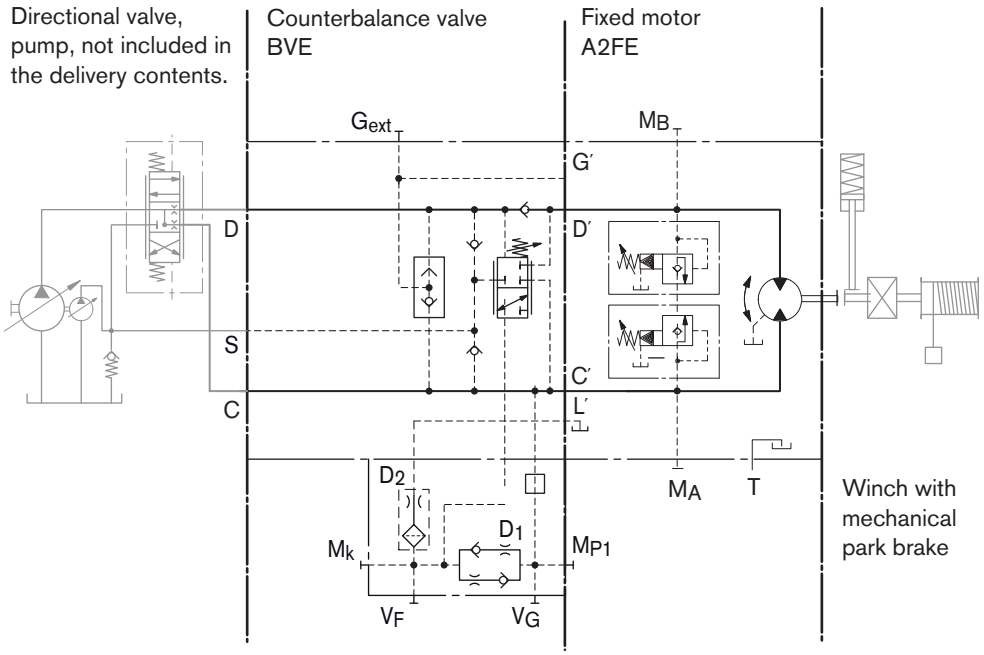

Permissible input flow or pressure in operation with DBV and BVD/BVE

Motor	Without valve		Restricted values in operation with DBV and BVD/BVE							
			DBV				BVD/BVE			
NG	p_{nom}/p_{max} [bar]	$q_{V\ max}$ [L/min]	NG	p_{nom}/p_{max} [bar]	q_V [L/min]	Code	NG	p_{nom}/p_{max} [bar]	q_V [L/min]	Code
28	400/450	176	16	350/420	100	181 191, 192	20 (BVD)	350/420	100	188
32		201								
45		255								
56		280	22		240				220	
63		315								
80		360								
90		405								
107		427				171 191, 192				178
125		500								
107		427	32		400	181 191, 192	25 (BVD/BVE)		320	188
125		500								
160		577								
180		648								

DBV _____ pressure-relief valve

BVD _____ counterbalance valve, double-acting

BVE _____ counterbalance valve, one-sided

Counterbalance valve BVD and BVE

Before finalizing your design, request a binding installation drawing. Dimensions in mm.

Dimensions

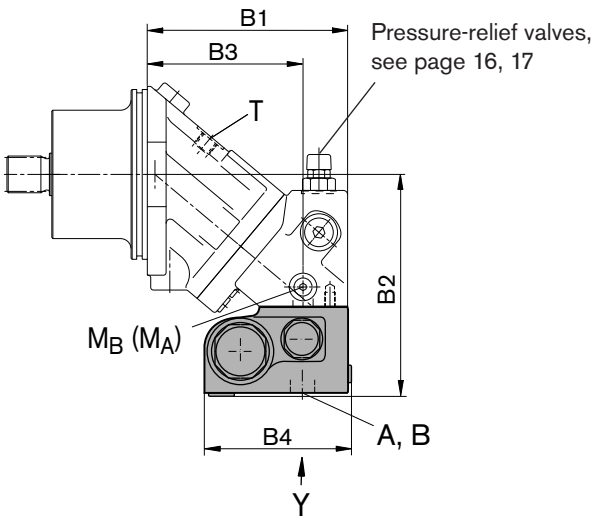

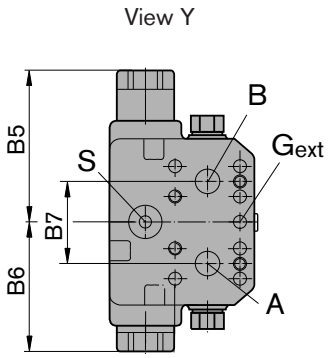

A2FE Size	Counterbalance valve Type	Ports A, B	Dimensions B1	B2	B3	B4 (S)	B4 (L)	B5	B6	B7
28, 32	BVD**20**..16	3/4 in	145	175	110	142	147	139	98	66
45	BVD**20**..16	3/4 in	161	196	126	142	147	139	98	66
56, 63	BVD**20**..17	3/4 in	189	197	147	142	147	139	98	75
80, 90	BVD**20**..27	1 in	193	207	151	142	147	139	98	75
107, 125	BVD**20**..28	1 in	216	238	168	142	147	139	98	84
107, 125	BVD**25**..38	$1^1/_4$ in	216	239	168	158	163	175	120.5	84
160, 180	BVD**25**..38	$1^1/_4$ in	249	260	202	158	163	175	120.5	84
107, 125	BVE**25**..38	$1^1/_4$ in	216	240	168	167	172	214	137	84
160, 180	BVE**25**..38	$1^1/_4$ in	249	260	202	167	172	214	137	84
250	On request									

Ports

Designation	Port for	Version	Standard	Size[1]	Maximum pressure [bar][2]	State[4]
A, B	Service line		SAE J518	see table above	420	O
S	Infeed	BVD20	DIN 3852[3]	M22 x 1.5; 14 deep	30	X
		BVD25, BVE25	DIN 3852[3]	M27 x 2; 16 deep	30	X
Br	Brake release, reduced high pressure	L	DIN 3852[3]	M12 x 1.5; 12.5 deep	30	O
G_{ext}	Brake release, high pressure	S	DIN 3852[3]	M12 x 1.5; 12.5 deep	420	X
M_A, M_B	Measuring pressure A and B		ISO 61493[3]	M12 x 1.5; 12 deep	420	X

1) Observe the general instructions on page 24 for the maximum tightening torques.
2) Momentary pressure spikes may occur depending on the application. Keep this in mind when selecting measuring devices and fittings.
3) The spot face can be deeper than specified in the appropriate standard.
4) O = Must be connected (plugged on delivery)
X = Plugged (in normal operation)

Counterbalance valve BVD and BVE

Before finalizing your design, request a binding installation drawing. Dimensions in mm.

Mounting the counterbalance valve

When delivered, the counterbalance valve is mounted to the motor with two tacking screws (transport protection). The tacking screws may not be removed while mounting the service lines. If the counterbalance valve and motor are delivered separately, the counterbalance valve must first be mounted to the motor port plate using the provided tacking screws. The counterbalance valve is finally mounted to the motor by screwing on the SAE flange with the following screws:

6 screws (**1, 2, 3, 4, 5, 8**) _____ length B1+B2+B3
2 screws (**6, 7**) _____ length B3+B4

Tighten the screws in two steps in the specified sequence from 1 to 8 (see following scheme).

In the first step, the screws must be tightened with half the tightening torque, and in the second step with the maximum tightening torque (see following table).

Thread	Strength class	Tightening torque [Nm]
M6 x 1 (tacking screw)	10.9	15.5
M10	10.9	75
M12	10.9	130
M14	10.9	205

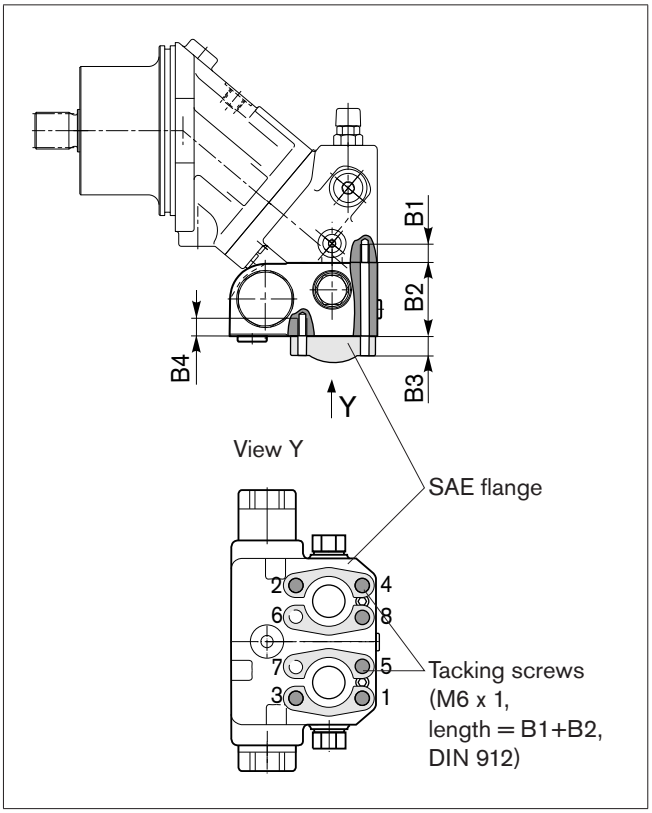

Size	28, 32, 45	56, 63	80, 90	107, 125, 160, 180	107, 125
Port plate	18				17
B1[1)]	M10 x 1.5; 17 deep	M10 x 1.5; 17 deep	M12 x 1.75; 18 deep	M14 x 2; 19 deep	M12 x 1.75; 17 deep
B2	78[2)]	68	68	85	68
B3	customer-specific				
B4	M10 x 1.5; 15 deep	M10 x 1.5; 15 deep	M12 x 1.75; 16 deep	M14 x 2; 19 deep	M12 x 1.75; 16 deep

1) Minimum required thread reach 1 x ø-thread
2) Including sandwich plate

Speed sensors

Before finalizing your design, request a binding installation drawing. Dimensions in mm.

The versions A2FE...U and A2FE...F ("prepared for speed sensor", i.e. without sensor) is equipped with a toothed ring.

On deliveries "prepared for speed sensor", the port is plugged with a pressure-resistant cover.

With the DSA or HDD speed sensor mounted a signal proportional to motor speed can be generated. The sensors measures the speed and direction of rotation.

Ordering code, technical data, dimensions and details on the connector, plus safety information about the sensor can be found in the relevant data sheet.

DSA _____ RE 95133

HDD _____ RE 95135

The sensor is mounted on the port provided for this purpose with a mounting bolt.

We recommend ordering the A2FE plug-in motor complete with sensor mounted.

Version "V"

Sizes 28 to 180 with DSA sensor

Size 250 with DSA sensor on request.

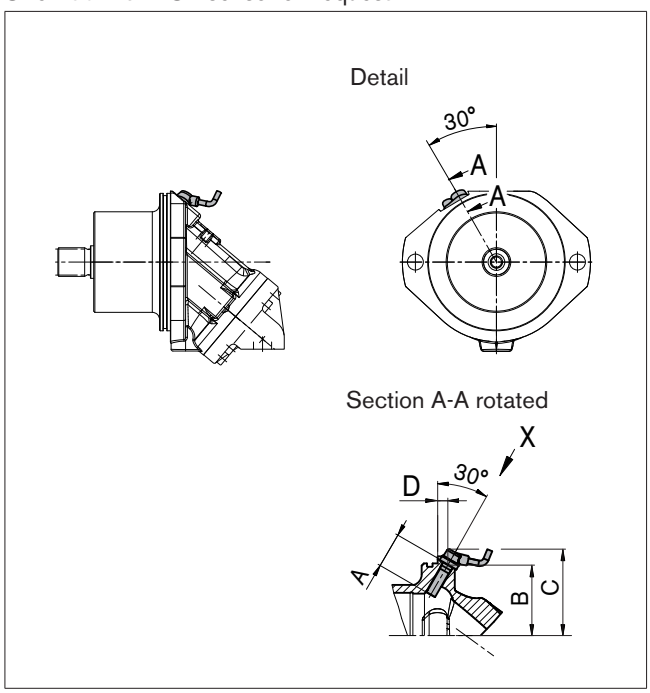

Version "H"

Size 250 with HDD sensor

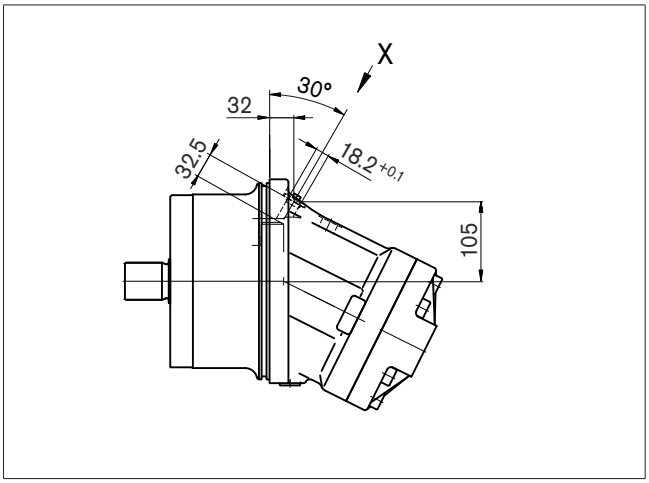

View X

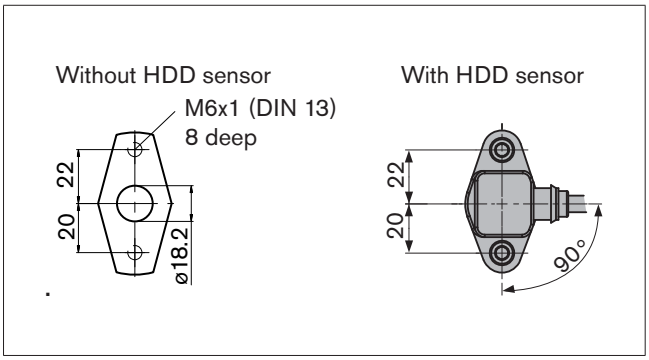

Size			28, 32	45	56, 63	80, 90	107, 125	160, 180	250
Number of teeth			38	45	47	53	59	67	78
DSA	A	Insertion depth (tolerance ± 0.1)	32	32	32	32	32	32	32
	B	Contact surface	66	On request					
	C		On request						
	D		12.3	On request					

Installation instructions

General

During commissioning and operation, the axial piston unit must be filled with hydraulic fluid and air bled. This must also be observed following a relatively long standstill as the axial piston unit may drain back to the reservoir via the hydraulic lines.

The case drain fluid in the motor housing must be directed to the reservoir via the highest available drain port (T_1, T_2).

For combinations of multiple units, make sure that the respective case pressure in each unit is not exceeded. In the event of pressure differences at the drain ports of the units, the shared drain line must be changed so that the minimum permissible case pressure of all connected units is not exceeded in any situation. If this is not possible, separate drain lines must be laid if necessary.

To achieve favorable noise values, decouple all connecting lines using elastic elements and avoid above-reservoir installation.

In all operating conditions, the drain line must flow into the reservoir below the minimum fluid level.

Installation position

See the following examples 1 to 5.
Further installation positions are possible upon request.

Recommended installation positions: 1 and 2.

Installation position	Air bleed	Filling
1	–	T_1
2	–	T_1 (sizes 28 to 180) T_2 (sizes 250 and 355)
3	–	T_1
4	(L_1)	T_1, (L_1)
5	(L_1)	T_2, (L_1)
6	(L_1)	T_1, (L_1)

L_1	Filling / air bleed
T_1, T_2	Drain port
$h_{t\,min}$	Minimum required immersion depth (200 mm)
h_{min}	Minimum required spacing to reservoir bottom (100 mm)

1) Standard for sizes 250 and 355, special version for sizes 28 to 180
2) Piping suggestion without port T_2 (standard for sizes 28 to 180).
3) Piping suggestion with port T_2 (standard for sizes 250 to 355, special version for sizes 28 to 180).
4) Installation position only permissible if port T_2 is fitted (standard for sizes 250 and 355, special version for sizes 28 to 180).

Below-reservoir installation (standard)

Below-reservoir installation means that the axial piston unit is installed outside of the reservoir below the minimum fluid level.

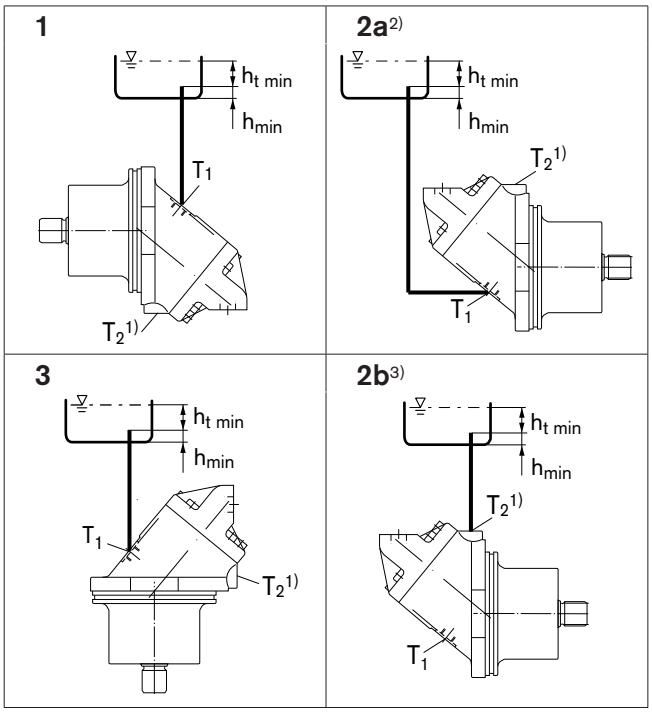

Above-reservoir installation

Above-reservoir installation means that the axial piston unit is installed above the minimum fluid level of the reservoir.

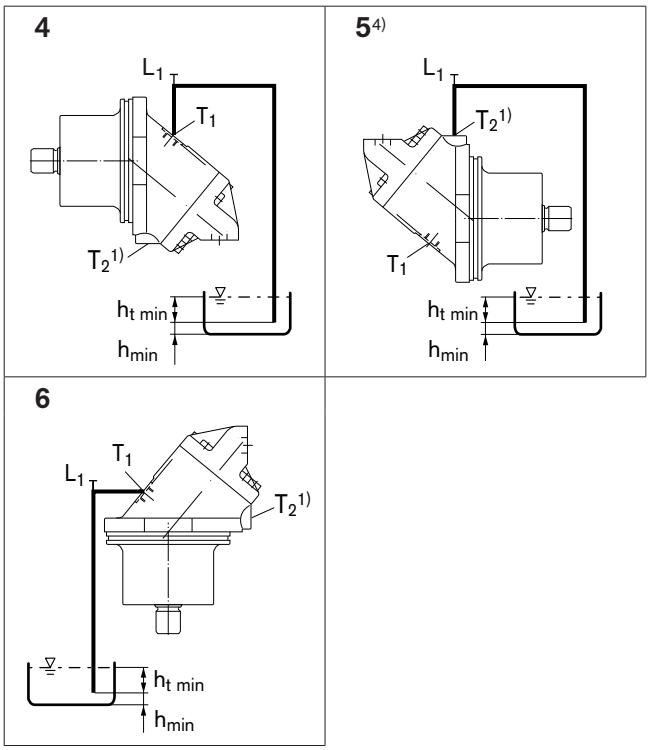

General instructions

– The motor A2FE is designed to be used in open and closed circuits.

– The project planning, installation and commissioning of the axial piston unit requires the involvement of qualified personnel.

– Before using the axial piston unit, please read the corresponding instruction manual completely and thoroughly. If necessary, these can be requested from Bosch Rexroth.

– During and shortly after operation, there is a risk of burns on the axial piston unit. Take appropriate safety measures (e. g. by wearing protective clothing).

– Depending on the operating conditions of the axial piston unit (operating pressure, fluid temperature), the characteristic may shift.

– Service line ports:

  - The ports and fastening threads are designed for the specified maximum pressure. The machine or system manufacturer must ensure that the connecting elements and lines correspond to the specified application conditions (pressure, flow, hydraulic fluid, temperature) with the necessary safety factors.

  - The service line ports and function ports can only be used to accommodate hydraulic lines.

– The data and notes contained herein must be adhered to.

– The product is not approved as a component for the safety concept of a general machine according to ISO 13849.

– The following tightening torques apply:

  - Fittings:
    Observe the manufacturer's instructions regarding tightening torques of the fittings used.

  - Mounting bolts:
    For mounting bolts with metric ISO thread according to DIN 13 or with thread according to ASME B1.1, we recommend checking the tightening torque in individual cases in accordance with VDI 2230.

  - Female threads in the axial piston unit:
    The maximum permissible tightening torques $M_{G\ max}$ are maximum values for the female threads and must not be exceeded. For values, see the following table.

  - Threaded plugs:
    For the metallic threaded plugs supplied with the axial piston unit, the required tightening torques of threaded plugs M_V apply. For values, see the following table.

Ports		**Maximum permissible tightening torque of the female threads $M_{G\ max}$**	**Required tightening torque of the threaded plugs M_V[1)]**	**WAF hexagon socket of the threaded plugs**
Standard	**Size of thread**			
DIN 3852	M12 x 1.5	50 Nm	25 Nm[2)]	6 mm
	M16 x 1.5	100 Nm	50 Nm	8 mm
	M18 x 1.5	140 Nm	60 Nm	8 mm
	M20 x 1.5	170 Nm	80 Nm	10 mm
	M22 x 1.5	210 Nm	80 Nm	10 mm
	M26 x 1.5	230 Nm	120 Nm	12 mm
	M27 x 2	330 Nm	135 Nm	12 mm
	M30 x 2	420 Nm	215 Nm	17 mm
	M33 x 2	540 Nm	225 Nm	17 mm
DIN ISO 228	G 1/4	40 Nm	–	–

1) The tightening torques apply for screws in the "dry" state as received on delivery and in the "lightly oiled" state for installation.
2) In the "lightly oiled" state, the M_V is reduced to 17 Nm for M12 x 1.5.

Axial piston fixed motor
A2FM Series 70
A2FE Series 70

RE 91071
Edition: 12.2015
Replaces 03.2015

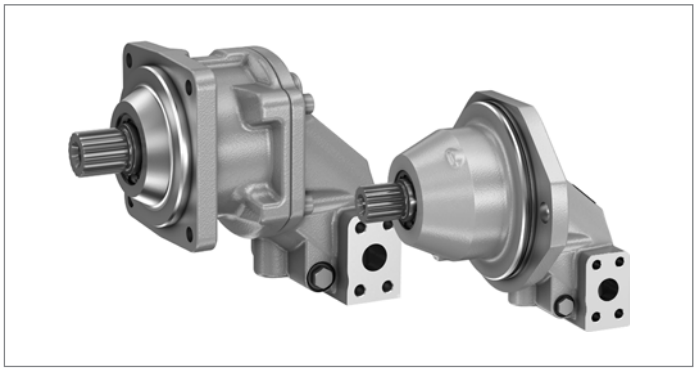

- A2FMN, A2FEN (sizes 56 to 107):
  Nominal pressure 300 bar
  Maximum pressure 350 bar
- A2FMM, A2FEM (sizes 45 to 90):
  Nominal pressure 400 bar
  Maximum pressure 450 bar
- A2FMH, A2FEH (sizes 45 to 90):
  Nominal pressure 450 bar
  Maximum pressure 500 bar

Features

- Fixed motor with axial tapered piston rotary group of bent-axis design, for hydrostatic drives in open and closed circuits
- For use in mobile and stationary applications
- Far-reaching integration of the plug-in version in mechanical gears due to recessed mounting flange located in the center of the case (extremely space-saving construction)
- Easy to install, simply plug the plug-in version into the mechanical gearbox
- The output speed is dependent on the flow of the pump and the displacement of the motor.
- The output torque increases with the pressure differential between the high-pressure side and the low-pressure side.
- Finely graduated sizes permit far-reaching adaptation to the drive concerned
- High power density
- Small dimensions
- High total efficiency
- Good starting efficiency
- Integrated flushing valve option

Contents

Type code	2
Hydraulic fluids	4
Flow direction	5
Shaft seal	5
Working pressure range	6
Technical data	7
A2FM dimensions, SAE flange ports at bottom	10
A2FM dimensions, SAE flange ports at side	11
A2FM dimensions, SAE flange ports at bottom	12
A2FM dimensions, SAE flange ports at side	13
A2FM dimensions, SAE flange ports at bottom	15
A2FM dimensions, SAE flange ports at side	16
A2FM dimensions, SAE flange ports at bottom	17
A2FM dimensions, SAE flange ports at side	18
Flushing and boost-pressure valve, integrated	19
Speed sensors DSA and DSM	20
Installation instructions	21
Project planning notes	23
Safety instructions	23

Type code

01	02	03	04		05	06	07	08	09	10	11	12	13	14		15
A2F				**/**	**70**	**N**	**W**	**V**							–	

Axial piston unit

01	Bent-axis design, fixed displacement	**A2F**

Operating mode

02	Motor, standard version	**M**
	Motor, plug-in version	**E**

Pressure range		**045**	**056**	**063**	**080**	**090**	**107**	
03	Nominal pressure: 300 bar, maximum pressure: 350 bar	○	○	○	○	●	●	**N**
	Nominal pressure: 400 bar, maximum pressure: 450 bar	○	○	○	●	●	○	**M**
	Nominal pressure: 450 bar, maximum pressure: 500 bar	○	○	○	●	●	○	**H**

Size (NG)

04	Geometric displacement, see technical data on page 7	**045**	**056**	**063**	**080**	**090**	**107**	

Series

05	Series 7, Index 0	**70**

Design of ports and fastening threads

06	Metric, DIN 3852 with profiled seal (Europe, ROW)	**N**

Direction of rotation

07	Viewed on drive shaft, bidirectional	**W**

Sealing material

08	FKM (fluoroelastomer)	**V**

Mounting flange			**045**	**056**	**063**	**080**	**090**	**107**	
09	ISO 3019-2 metric	125-4 (only available for A2FM)	●	●	●	●[1)]	–	–	**M4**
		140-4 (only available for A2FM)	–	–	–	●	●	●[1)]	**N4**
		160-4 (only available for A2FE)	●	●	●	●[1)]	–	–	**P2**
		190-2 (only available for A2FE)	–	–	–	●	●	●[1)]	**Y2**

Drive shaft			**045**	**056**	**063**	**080**	**090**	**107**	
10	Splined shaft DIN 5480	W30x2x14x9g	●	●[2)]	–	–	–	–	**Z6**
		W35x2x16x9g	–	●	●	●	–	–	**Z8**
		W40x2x18x9g	–	–	–	●[3)]	●	●	**Z9**
	Parallel keyed shaft DIN 6885	ø 30	●	●	–	–	–	–	**P6**
		ø 35	–	●	●	●	–	–	**P8**
		ø 40	–	–	–	●[3)]	●	●	**P9**

Port for working lines		**045**	**056**	**063**	**080**	**090**	**107**	
11	SAE flange ports A and B at bottom	●	●	●	●	●	●	**11**
	SAE flange ports A and B at side, opposite	●	●	●	●	●	●	**02**
	Threaded ports A and B at side, opposite	○	○	○	–	–	–	**05**

● = Available ○ = On request – = Not available

1) Only available for A2FMN, A2FEN (pressure range 300 to 350 bar)
2) not available for A2FMH, A2FEH (pressure range 450 to 500 bar)
3) not available for A2FMN, A2FEN (pressure range 300 to 350 bar)

01	02	03	04		05	06	07	08	09	10	11	12	13	14		15
A2F				**/**	**70**	**N**	**W**	**V**							–	

Valves

				045	056	063	080	090	107	
12	Without valves			●	●	●	●	●	●	**0**
	Integrated flushing and boost pressure valve Flushing flow when: $\Delta p = p_{ND} - p_G = 25$ bar and $\nu = 10$ mm²/s	**Flushing flow [l/min] /** orifice ø [mm]	**2.6** / 1.0	●	●	●	●	●	●	**C**
			6.0 / 1.5	●	●	●	●	●	●	**E**
			7.4 / 1.7	●	●	●	●	●	●	**F**
			8.5 / 1.8	●	●	●	●	●	●	**G**
			11.4 / 2.3	●	●	●	●	●	●	**I**
			12.5 / 3	●	●	●	●	●	●	**J**

Speed sensor

13	Without speed sensor	**0**
	Prepared for DSA sensor	**A**
	DSA speed sensor mounted	**B**
	Prepared for DSM sensor (not available for A2FE)	**N**
	Speed sensor DSM mounted (not available for A2FE)	**M**

Special version

14	Standard version	**0**
	Long-life bearing[4)]	**L**
	Special version for slew drives	**J**

Standard / special version

15	Standard version	**0**
	Standard version with installation variants, e. g. T ports contrary to standard, open or closed	**Y**
	Special version	**S**

● = Available ○ = On request – = Not available

Notes

▶ Note the project planning notes on page 23.

4) Type code version “L” not available in combination with A2FMH/A2FEH since in the case of pressure range “H” the long-life bearing is already included in the standard version (type code designation “0”).

Hydraulic fluids

The fixed motor A2FM/A2FE is designed for operation with HLP mineral oil according to DIN 51524.
Application instructions and requirements for hydraulic fluids should be taken from the following data sheets before the start of project planning:

- 90220: Hydraulic fluids based on mineral oils and related hydrocarbons
- 90221: Environmentally acceptable hydraulic fluids
- 90222: Fire-resistant, water-free hydraulic fluids (HFDR/HFDU)
- 90223: Fire-resistant, water-containing hydraulic fluids (HFAE, HFAS, HFB, HFC)

Details regarding the selection of hydraulic fluid
The hydraulic fluid should be selected so that the operating viscosity in the operating temperature range is within the optimum range (v_{opt}, see selection diagram).

Note
At no point on the component may the temperature be higher than 115 °C. The temperature difference specified in the table is to be taken into account when determining the viscosity in the bearing.
If the above conditions cannot be maintained due to extreme operating parameters, we recommend the use of a flushing and boost pressure valve (see page 19).

Viscosity and temperature of hydraulic fluids

	Viscosity	Temperature	Comment
Cold start	v_{max} ≤ 1600 mm²/s	θ_{St} ≥ −40 °C	t ≤ 3 min, n ≤ 1000 rpm, without load p ≤ 50 bar
Permissible temperature difference		ΔT ≤ 25 K	between axial piston unit and hydraulic fluid in the system
Warm-up phase	v < 1600 to 400 mm²/s	θ = −40 °C to −25 °C	at p ≤ 0.7 × p_{nom}, n ≤ 0.5 × n_{nom} and t ≤ 15 min
Continuous operation	v = 400 to 10 mm²/s		this corresponds, for VG 46 for example, to a temperature range of +5 °C to +85 °C (see selection diagram)
		θ = −25 °C to +103 °C	measured at port **T** note the permissible temperature range of the shaft seal (ΔT = approx. 12 K between bearing/shaft seal and port **T**)
	v_{opt} = 36 to 16 mm²/s		range of optimum operating viscosity and efficiency
Short-term operation	v_{min} ≥ 7 mm²/s		t < 3 min, p < 0.3 × p_{nom}

▼ **Selection diagram**

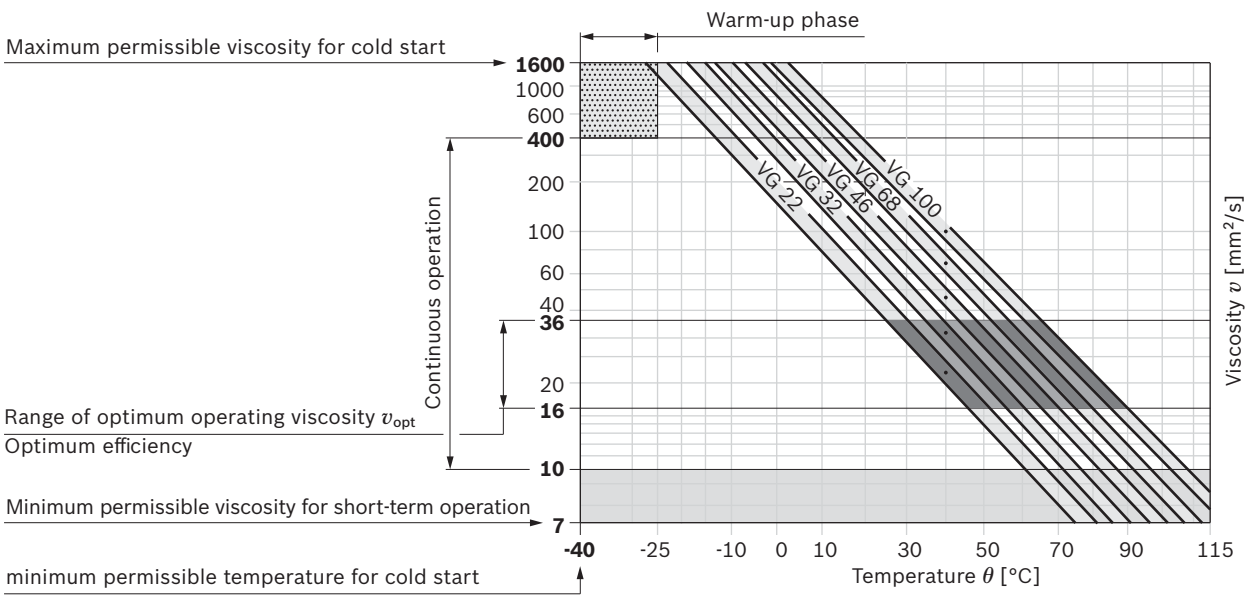

Filtration of the hydraulic fluid

Finer filtration improves the cleanliness level of the hydraulic fluid, which increases the service life of the axial piston unit. A cleanliness level of at least 20/18/15 is to be maintained according to ISO 4406.

At very high hydraulic fluid temperatures (90 °C to maximum 103 °C, measured at port **T**), a cleanliness level of at least 19/17/14 according to ISO 4406 is necessary.

Flow direction

Direction of rotation, viewed on drive shaft	
clockwise	counter clockwise
A to **B**	**B** to **A**

Shaft seal

Permissible pressure loading

The service life of the shaft seal is influenced by the speed of the axial piston unit and the leakage pressure in the housing (case pressure). The mean differential pressure of 2 bar between the housing and the ambient pressure may not be enduringly exceeded at normal operating temperature. Momentary pressure peaks (t < 0.1 s) up to 10 bar are allowed. The service life of the shaft seal decreases with increasing frequency of pressure spikes and increasing mean differential pressure.

The case pressure must be equal to or higher than the ambient pressure.

The FKM shaft seal ring may be used for leakage temperatures from -25 °C to +115 °C. For application cases below -25 °C, an NBR shaft seal is required (permissible temperature range: -40 °C to +90 °C).

Working pressure range

Pressure at working port A or B			Definition
Nominal pressure p_{nom}	A2FMN, A2FEN	300 bar absolute	The nominal pressure corresponds to the maximum design pressure.
	A2FMM, A2FEM	400 bar absolute	
	A2FMH, A2FEH	450 bar absolute	
Maximum pressure p_{max}	A2FMN, A2FEN	350 bar absolute	The maximum pressure corresponds to the maximum working pressure within the single operating period. The sum of the single operating periods must not exceed the total operating period.
	A2FMM, A2FEM	450 bar absolute	
	A2FMH, A2FEH	500 bar absolute	
Single operating period		10 s	
Total operating period		300 h	
Minimum pressure (high-pressure side)		25 bar absolute	Minimum pressure at the high-pressure side (**A** or **B**) required to prevent damage to the axial piston unit.
Minimum pressure – pump operating mode (inlet)		see characteristic	To prevent damage to the axial piston motor in pump mode (change of high-pressure side with unchanged direction of rotation, e.g. when braking), a minimum pressure must be guaranteed at the working port (inlet). The minimum pressure depends on the rotational speed and displacement of the axial piston unit.
Total pressure p_{Su} (pressure **A** + pressure **B**)		700 bar absolute	The summation pressure is the sum of the pressures at both work ports (**A** and **B**).
Rate of pressure change $R_{A\,max}$			Maximum permissible rate of pressure build-up and reduction during a pressure change across the entire pressure range.
with built-in pressure relief valve		9000 bar/s	
without pressure relief valve		16000 bar/s	

▼ **Rate of pressure change $R_{A\,max}$**

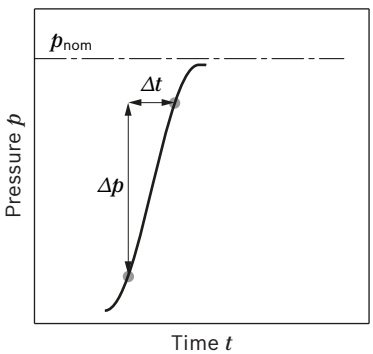

▼ **Pressure definition**

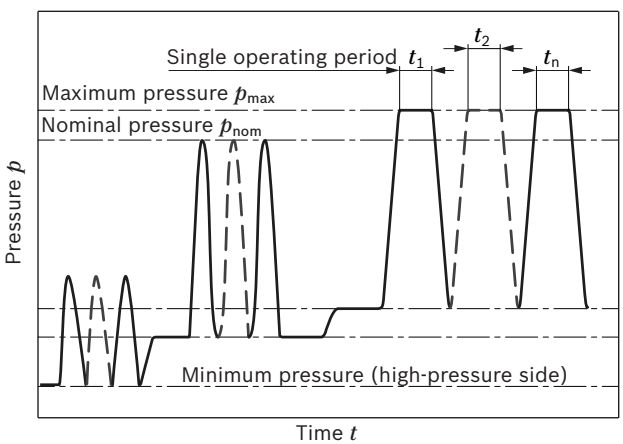

Total operating period = $t_1 + t_2 + ... + t_n$

▼ **Minimum pressure – pump operating mode (inlet)**

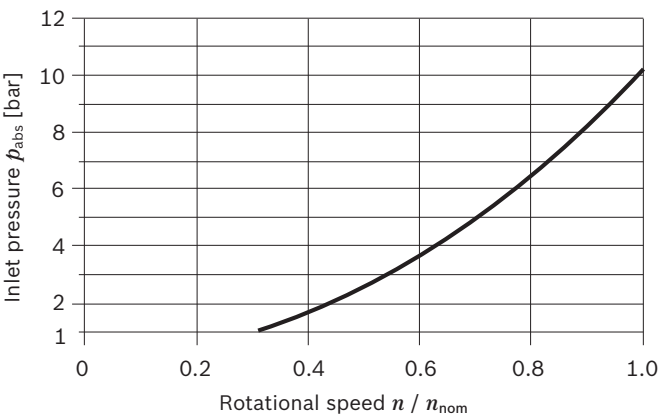

This diagram is only valid for the optimum viscosity range of ν_{opt} = 36 to 16 mm²/s.
Please contact us if these conditions cannot be satisfied.

Note
Working pressure range valid when using hydraulic fluids based on mineral oils. Values for other hydraulic fluids – please contact us.

Technical data

A2FMN, A2FEN

Size	NG		56	63	80	90	107
Displacement, geometric, per revolution	V_g	cm^3	56.6	63.0	81.7	90.5	108.8
Maximum rotational speed[1]	n_{nom}	rpm	3750	3750	3375	3375	3000
	n_{max}[2]	rpm	4125	4125	3700	3700	3300
Inlet flow	$q_{v\,max}$	l/min	210	236	370	270	321
Torque[3] at Δp = 300 bar	T	Nm	270	301	390	432	519
Rotary stiffness	c_{min}	kNm/rad	6.83	8.09	7.94	9.84	10.9
Moment of inertia for rotary group	J_{TW}	kgm^2	0.0032	0.0032	0.0034	0.0054	0.0061
Maximum angular acceleration	α	rad/s^2	10000	12200	19800	4500	6000
Case volume	V	l	0.6	0.6	0.6	0.65	0.65
Weight approx.	m	kg	17	17	17	23	23

A2FMM, A2FEM

Size	NG		45	56	63	80	90
Displacement, geometric, per revolution	V_g	cm^3	44.9	56.6	63.0	79.8	90.5
Maximum rotational speed[1]	n_{nom}	rpm	5000	5000	5000	4500	4500
	n_{max}[2]	rpm	5500	5500	5500	5000	5000
Inlet flow	$q_{v\,max}$	l/min	225	280	315	360	405
Torque[3] at Δp = 400 bar	T	Nm	286	360	401	508	576
Rotary stiffness	c_{min}	kNm/rad	4.52	6.83	8.09	9.09	9.84
Moment of inertia for rotary group	J_{TW}	kgm^2	0.0032	0.0032	0.0032	0.0058	0.0054
Maximum angular acceleration	α	rad/s^2	5400	9000	11100	4500	4500
Case volume	V	l	0.6	0.6	0.6	0.65	0.65
Weight approx.	m	kg	17	17	17	23	23

A2FMH, A2FEH

Size	NG		45	56	63	80	90
Displacement, geometric, per revolution	V_g	cm^3	44.9	56.6	63.0	79.8	90.5
Maximum rotational speed[1]	n_{nom}	rpm	5000	5000	5000	4500	4500
	n_{max}[2]	rpm	5500	5500	5500	5000	5000
Inlet flow	$q_{v\,max}$	l/min	225	280	315	360	405
Torque[3] at Δp = 450 bar	T	Nm	322	405	451	571	648
Rotary stiffness	c_{min}	kNm/rad	4.52	6.83	8.09	9.09	9.84
Moment of inertia for rotary group	J_{TW}	kgm^2	0.0032	0.0032	0.0032	0.0058	0.0054
Maximum angular acceleration	α	rad/s^2	5000	8550	10500	4500	4500
Case volume	V	l	0.6	0.6	0.6	0.65	0.65
Weight approx.	m	kg	17	17	17	23	23

Speed range

No limit to minimum speed n_{min}. If uniformity of motion is required, speed n_{min} must not be less than 50 rpm.

1) The valid values (observing the maximum permissible flow):
   – to the optimum viscosity range from v_{opt} = 36 to 16 mm^2/s
   – with hydraulic fluid based on mineral oil

2) Intermittent maximum speed: Overspeed for unload and overhauling processes, t < 5 s and Δp < 150 bar

3) Torque without radial force, with radial force see page 8

Permissible radial and axial forces of the drive shafts

A2FMN, A2FEN

Size		NG		Z6/P6	Z8/P8	Z8/P8	Z8/P8	Z9/P9	Z9/P9	
				56	56	63	80	90	107	
Drive shaft	with splined shaft	ø	mm	30	35	35	35	40	40	
	with parallel keyed shaft	ø	mm	30	35	35	35	40	40	
Maximum radial force[1] at distance a (from shaft collar)		$F_{q\,max}$	kN	7.1	6.1	6.9	8.7	8.6	10.4	
		a	mm	18	18	18	18	20	20	
Maximum torque at $F_{q\,max}$		$T_{q\,max}$	Nm	267	267	301	382	430	519	
Maximum differential pressure at $F_{q\,max}$		$\Delta p_{q\,max}$	bar	300	300	300	300	300	300	
Maximum axial force at standstill or pressure-free operation	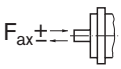	+ $F_{ax\,max}$	N	0	0	0	0	0	0	
		− $F_{ax\,max}$	N	800	800	800	800	1000	1000	
Permissible axial force per bar working pressure		+ $F_{ax\,perm}$/bar	N/bar	8.7	8.7	8.7	8.7	10.6	10.6	

A2FMM, A2FEM

Size		NG		Z6/P6	Z6/P6	Z8/P8	Z8/P8	Z8/P8	Z9/P9	Z9/P9
				45	56	56	63	80	80	90
Drive shaft	with splined shaft	ø	mm	30	30	35	35	35	40	40
	with parallel keyed shaft	ø	mm	30	30	35	35	35	40	40
Maximum radial force[1] at distance a (from shaft collar)		$F_{q\,max}$	kN	7.6	9.5	8.1	9.2	11.6	10.2	11.5
		a	mm	18	18	18	18	20	20	20
Maximum torque at $F_{q\,max}$		$T_{q\,max}$	Nm	286	357	357	401	509	509	573
Maximum differential pressure at $F_{q\,max}$		$\Delta p_{q\,max}$	bar	400	400	400	400	400	400	400
Maximum axial force at standstill or pressure-free operation	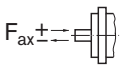	+ $F_{ax\,max}$	N	0	0	0	0	0	0	0
		− $F_{ax\,max}$	N	800	800	800	800	1000	1000	1000
Permissible axial force per bar working pressure		+ $F_{ax\,perm}$/bar	N/bar	8.7	8.7	8.7	8.7	10.6	10.6	10.6

A2FMH, A2FEH

Size		NG		Z6/P6	P6	Z8/P8	Z8/P8	Z8/P8	Z9/P9	Z9/P9
				45	56	56	63	80	80	90
Drive shaft	with splined shaft	ø	mm	30	–	35	35	35	40	40
	with parallel keyed shaft	ø	mm	30	30	35	35	35	40	40
Maximum radial force[1] at distance a (from shaft collar)		$F_{q\,max}$	kN	8.6	10.7	9.2	10.3	13.1	10.2	11.5
		a	mm	18	18	18	18	20	20	20
Maximum torque at $F_{q\,max}$		$T_{q\,max}$	Nm	322	401	401	451	573	573	645
Maximum differential pressure at $F_{q\,max}$		$\Delta p_{q\,max}$	bar	450	450	450	450	450	450	450
Maximum axial force at standstill or pressure-free operation	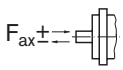	+ $F_{ax\,max}$	N	0	0	0	0	0	0	0
		− $F_{ax\,max}$	N	800	800	800	800	1000	1000	1000
Permissible axial force per bar working pressure		+ $F_{ax\,perm}$/bar	N/bar	8.7	8.7	8.7	8.7	10.6	10.6	10.6

1) With intermittent operation

Calculation of characteristics			
Inlet flow	q_v	$= \frac{V_g \times n}{1000 \times \eta_v}$	[l/min]
Rotational speed	n	$= \frac{q_v \times 1000 \times \eta_v}{V_g}$	[rpm]
Torque	T	$= \frac{V_g \times \Delta p \times \eta_{mh}}{20 \times \pi}$	[Nm]
Power	P	$= \frac{2 \pi \times T \times n}{60000} = \frac{q_v \times \Delta p \times \eta_t}{600}$	[kW]

Key		
V_g	=	Displacement per revolution [cm³]
Δp	=	Differential pressure [bar]
n	=	Rotational speed [rpm]
η_v	=	Volumetric efficiency
η_{mh}	=	Mechanical-hydraulic efficiency
η_t	=	Total efficiency ($\eta_t = \eta_v \times \eta_{mh}$)

Notes

- Theoretical values, without efficiency and tolerances; values rounded.
- Operation above the maximum values or below the minimum values may result in a loss of function, a reduced service life or in the destruction of the axial piston unit. Other permissible limit values, such as speed variation, reduced angular acceleration as a function of the frequency and the permissible angular acceleration at start (lower than the maximum angular acceleration) can be found in data sheet 90261.
- The permissible axial force in direction $-F_{ax}$ is to be avoided as the lifetime of the bearing is reduced.
- Special requirements apply in the case of belt drives. Please contact us.

w

Effect of radial force F_q on the service life of bearings

By selecting a suitable direction of radial force F_q, the load on the bearings, caused by the internal rotary group forces can be reduced, thus optimizing the service life of the bearings. Recommended position of mating gear is dependent on direction of rotation. Examples:

▼ **Gear output drive**

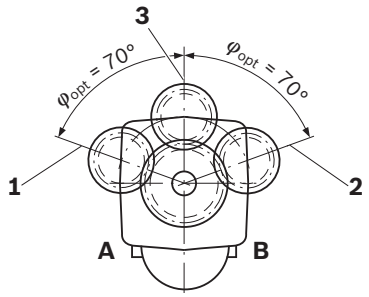

1 "Counter-clockwise" rotationPressure at port **B**

2 "Clockwise" rotation Pressure at port **A**

3 "Alternating" direction of rotation

A2FM dimensions, SAE flange ports at bottom

A2FMN sizes 56, 63 and 80
A2FMM sizes 45, 56 and 63
A2FMH sizes 45, 56 and 63

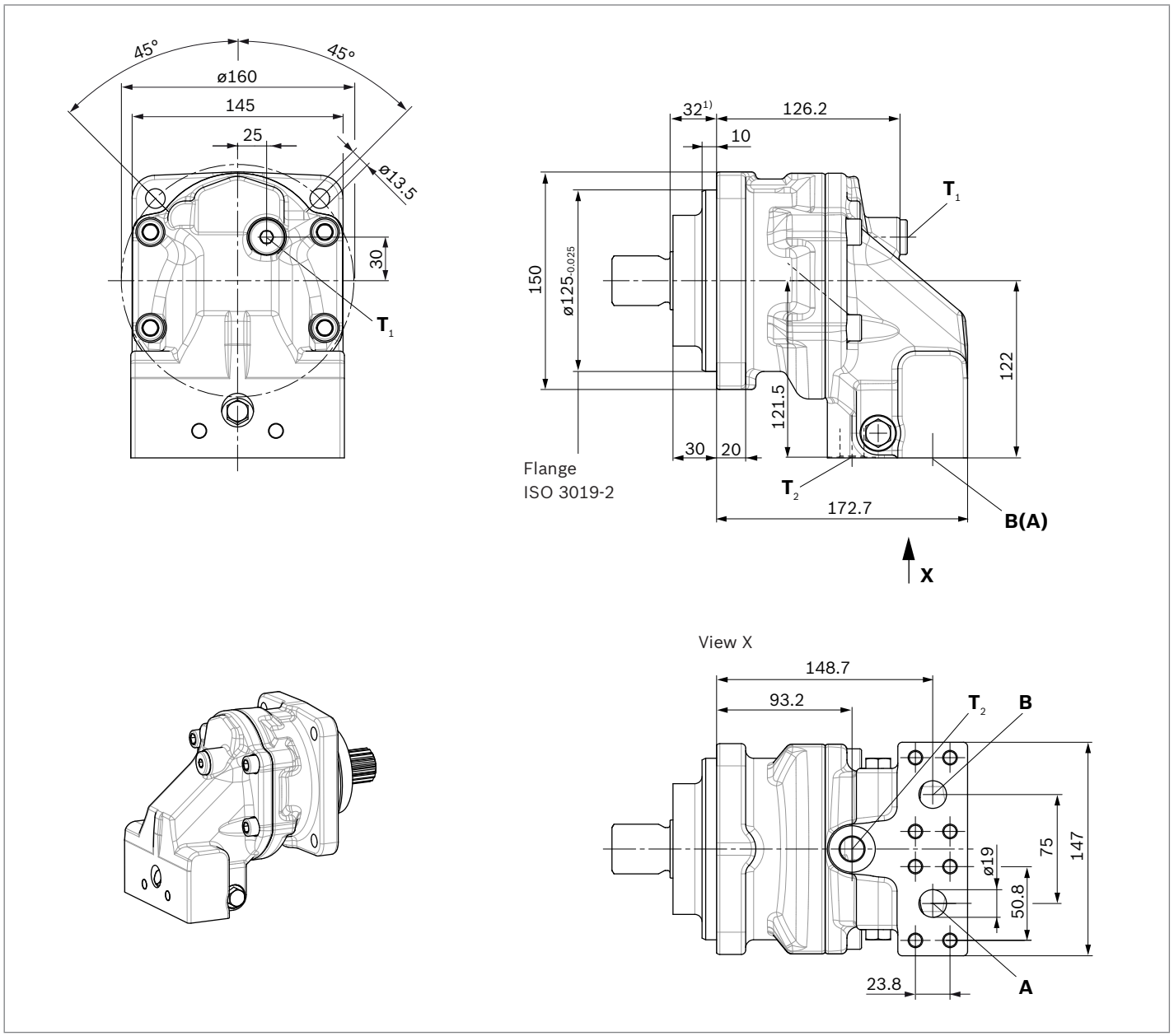

Ports		Standard	Size[2]	$p_{max\ abs}$ [bar][3]	Status[6]
A, B	Working port Fastening thread A/B	SAE J518 DIN 13	3/4 in M10 × 1.5; 17 deep	500	O
T_1	Drain port	DIN 3852[5]	M18 × 1.5; 12 deep	3	X[4]
T_2	Drain port	DIN 3852[5]	M18 × 1.5; 12 deep	3	O[4]

1) To shaft collar
2) For notes on tightening torques, see instruction manual.
3) Depending on the application, momentary pressure peaks may occur. Keep this in mind when selecting measuring devices and fittings.
4) Depending on installation position, T_1 or T_2 must be connected (see also installation instructions on page 21).
5) The spot face can be deeper than as specified in the standard
6) O = Must be connected (plugged on delivery)
X = Plugged (in normal operation)

A2FM dimensions, SAE flange ports at side

A2FMN sizes 56, 63 and 80
A2FMM sizes 45, 56 and 63
A2FMH sizes 45, 56 and 63

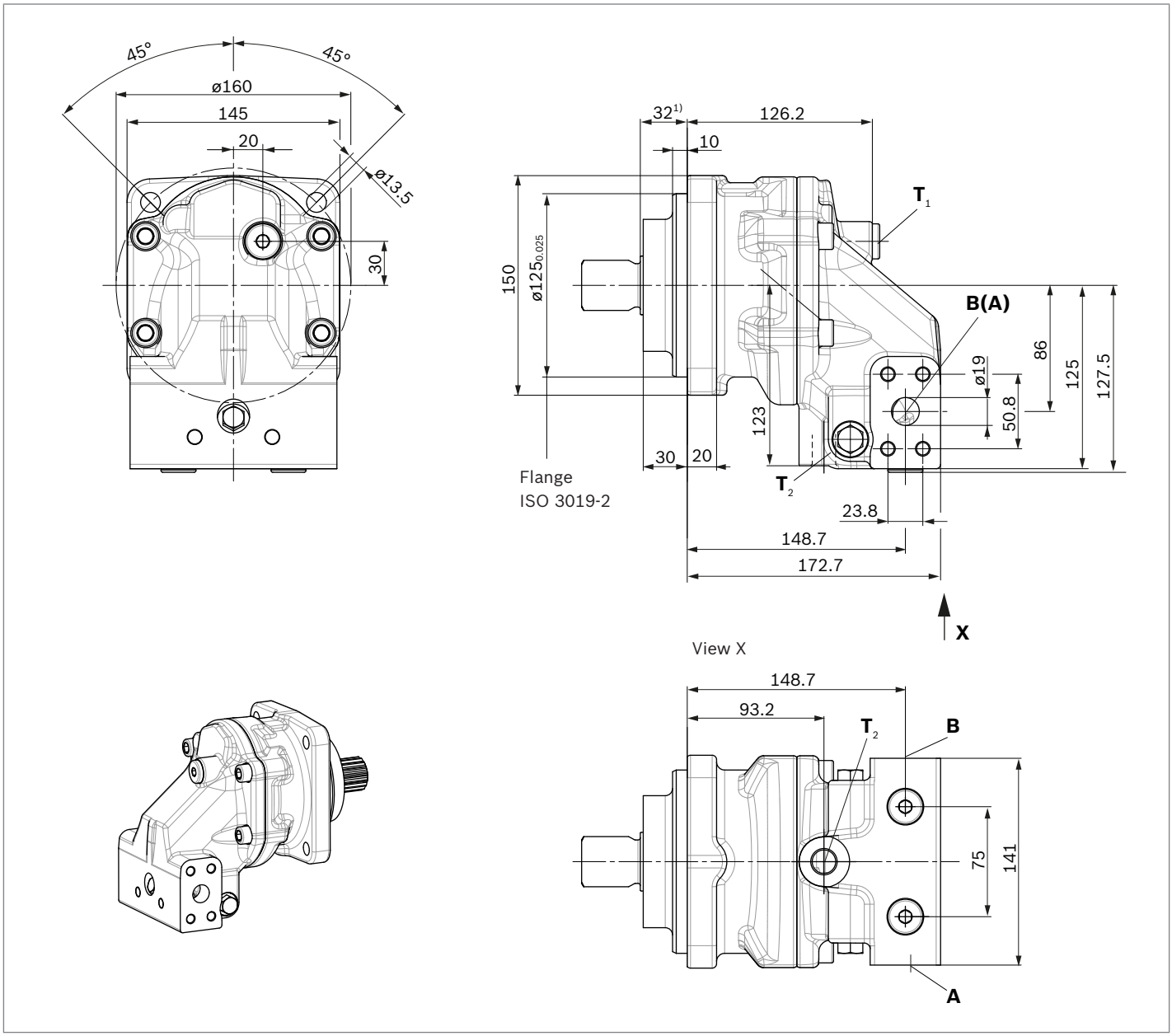

Ports		Standard	Size[2)]	$p_{max\ abs}$ [bar][3)]	Status[6)]
A, B	Working port Fastening thread A/B	SAE J518 DIN 13	3/4 in M10 × 1.5; 17 deep	500	O
T_1	Drain port	DIN 3852[5)]	M18 × 1.5; 12 deep	3	X[4)]
T_2	Drain port	DIN 3852[5)]	M18 × 1.5; 12 deep	3	O[4)]

1) To shaft collar
2) For notes on tightening torques, see instruction manual.
3) Depending on the application, momentary pressure peaks may occur. Keep this in mind when selecting measuring devices and fittings.
4) Depending on installation position, T_1 or T_2 must be connected (see also installation instructions on page 21).
5) The spot face can be deeper than as specified in the standard
6) O = Must be connected (plugged on delivery)
X = Plugged (in normal operation)

A2FE dimensions, SAE flange ports at bottom

A2FEN sizes 56, 63 and 80
A2FEM sizes 45, 56 and 63
A2FEH sizes 45, 56 and 63

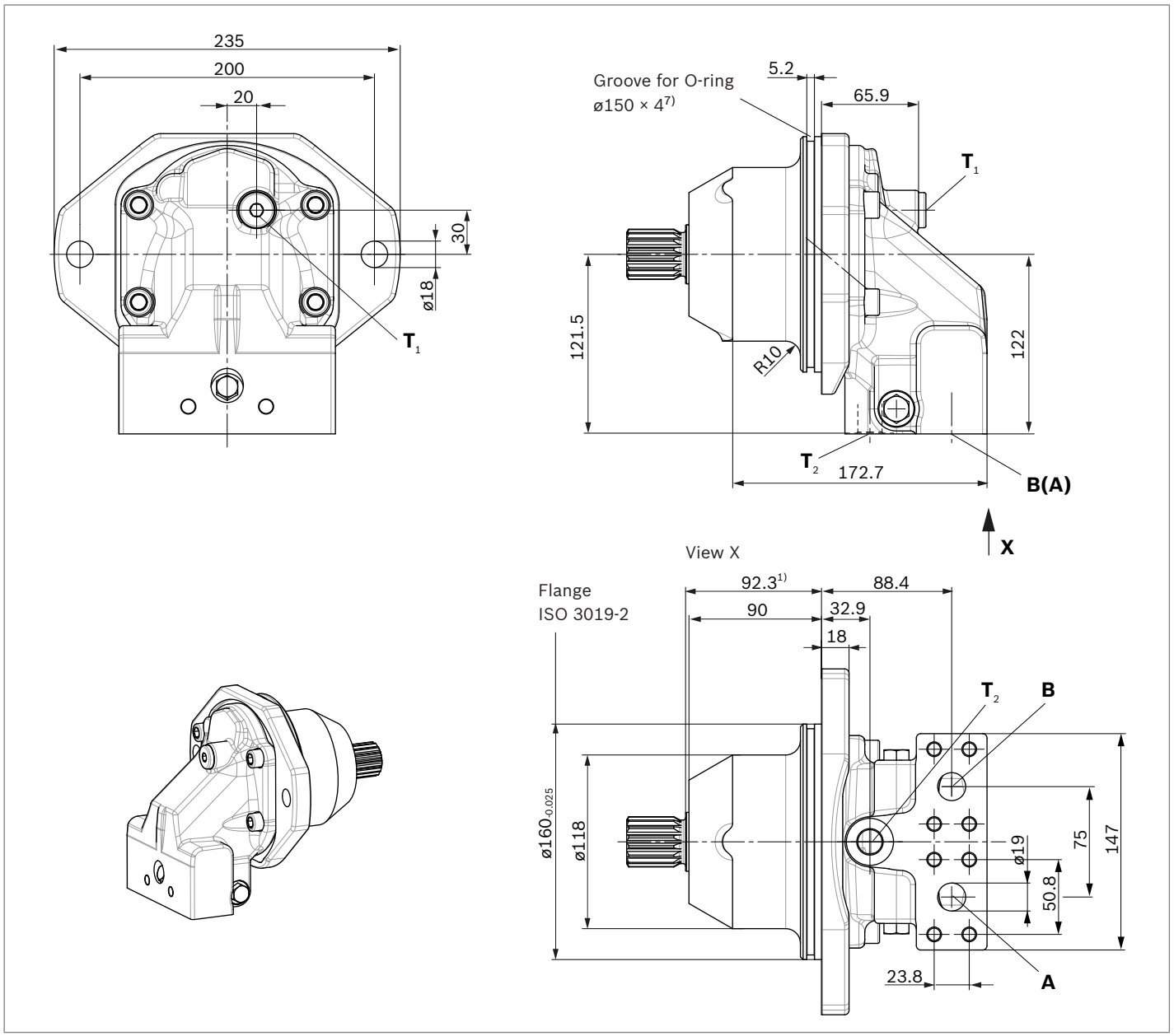

Ports		Standard	Size[2)]	$p_{max\ abs}$ [bar][3)]	Status[6)]
A, B	Working port Fastening thread A/B	SAE J518 DIN 13	3/4 in M10 × 1.5; 17 deep	500	O
T_1	Drain port	DIN 3852[5)]	M18 × 1.5; 12 deep	3	X[4)]
T_2	Drain port	DIN 3852[5)]	M18 × 1.5; 12 deep	3	O[4)]

1) To shaft collar
2) For notes on tightening torques, see instruction manual.
3) Depending on the application, momentary pressure peaks may occur. Keep this in mind when selecting measuring devices and fittings.
4) Depending on installation position, T_1 or T_2 must be connected (see also installation instructions on page 21).
5) The spot face can be deeper than as specified in the standard
6) O = Must be connected (plugged on delivery)
X = Plugged (in normal operation)
7) O-ring is not included in the scope of delivery. Bosch Rexroth material number R902601553.

A2FE dimensions, SAE flange ports at side

A2FEN sizes 56, 63 and 80
A2FEM sizes 45, 56 and 63
A2FEH sizes 45, 56 and 63

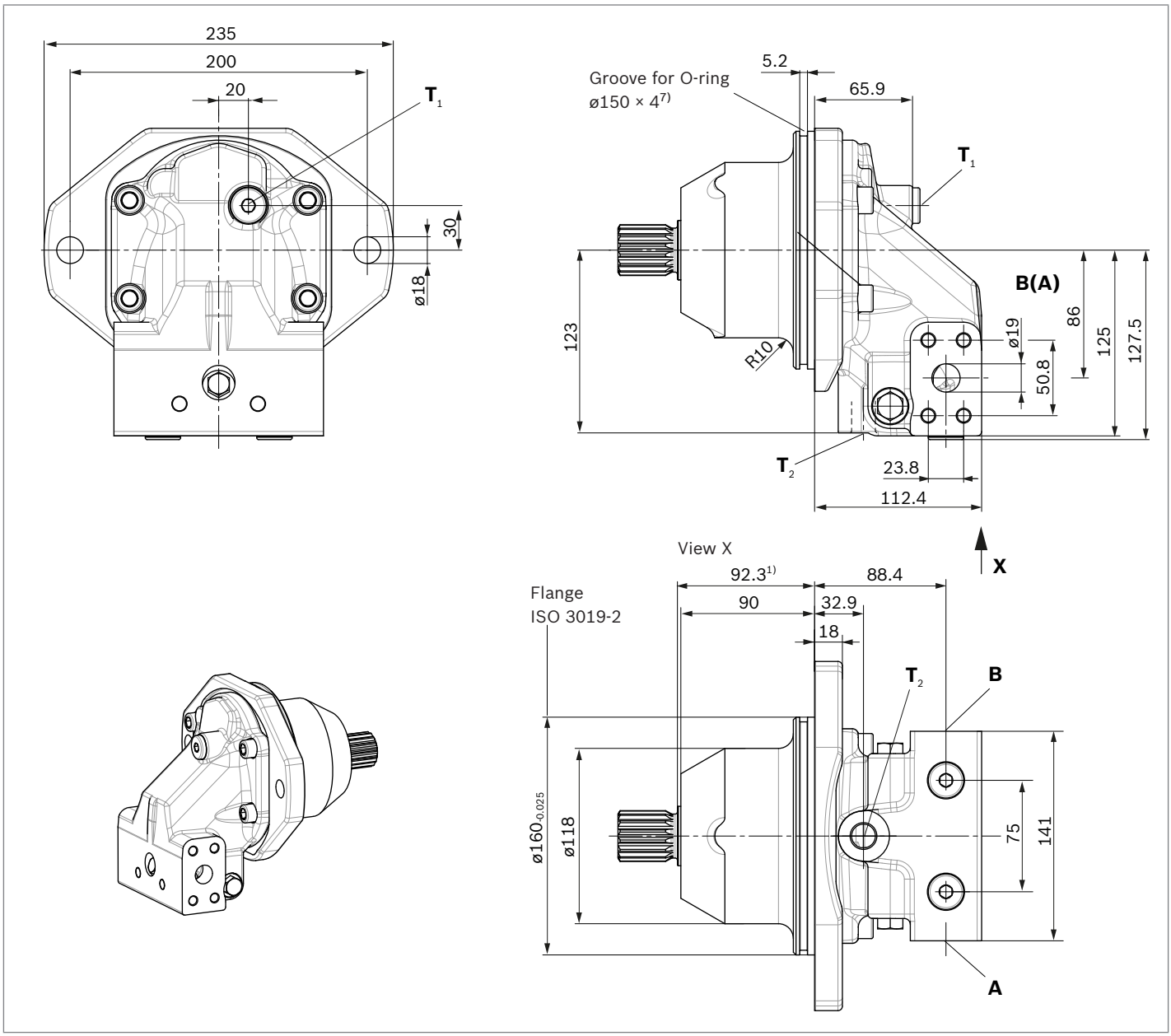

Ports		Standard	Size[2]	$p_{max\ abs}$ [bar][3]	Status[6]
A, B	Working port Fastening thread A/B	SAE J518 DIN 13	3/4 in M10 × 1.5; 17 deep	500	O
T_1	Drain port	DIN 3852[5]	M18 × 1.5; 12 deep	3	X[4]
T_2	Drain port	DIN 3852[5]	M18 × 1.5; 12 deep	3	O[4]

1) To shaft collar
2) For notes on tightening torques, see instruction manual.
3) Depending on the application, momentary pressure peaks may occur. Keep this in mind when selecting measuring devices and fittings.
4) Depending on installation position, T_1 or T_2 must be connected (see also installation instructions on page 21).
5) The spot face can be deeper than as specified in the standard
6) O = Must be connected (plugged on delivery)
X = Plugged (in normal operation)
7) O-ring is not included in the scope of delivery. Bosch Rexroth material number R902601553.

▼ **Splined shaft DIN 5480, sizes 45 and 56**

Z6 – W30×2×14×9g

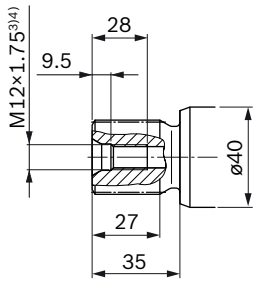

▼ **Parallel keyed shaft, DIN 6885, sizes 45 and 56**

P6 – AS8×7×50

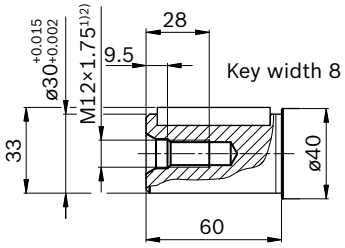

▼ **Splined shaft DIN 5480, sizes 56, 63 and 80**

Z8 – W35×2×16×9g

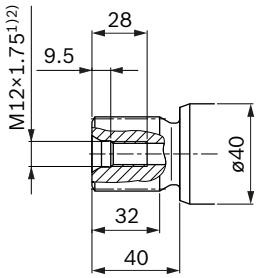

▼ **Parallel keyed shaft, DIN 6885, sizes 56, 63 and 80**

P8 – AS10×8×56

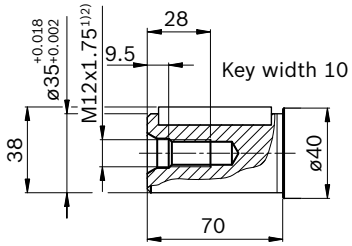

1) Center bore according to DIN 332 (thread according to DIN 13)
2) For notes on tightening torques, see instruction manual.

A2FM dimensions, SAE flange ports at bottom

A2FMN sizes 90 and 107
A2FMM sizes 80 and 90
A2FMH sizes 80 and 90

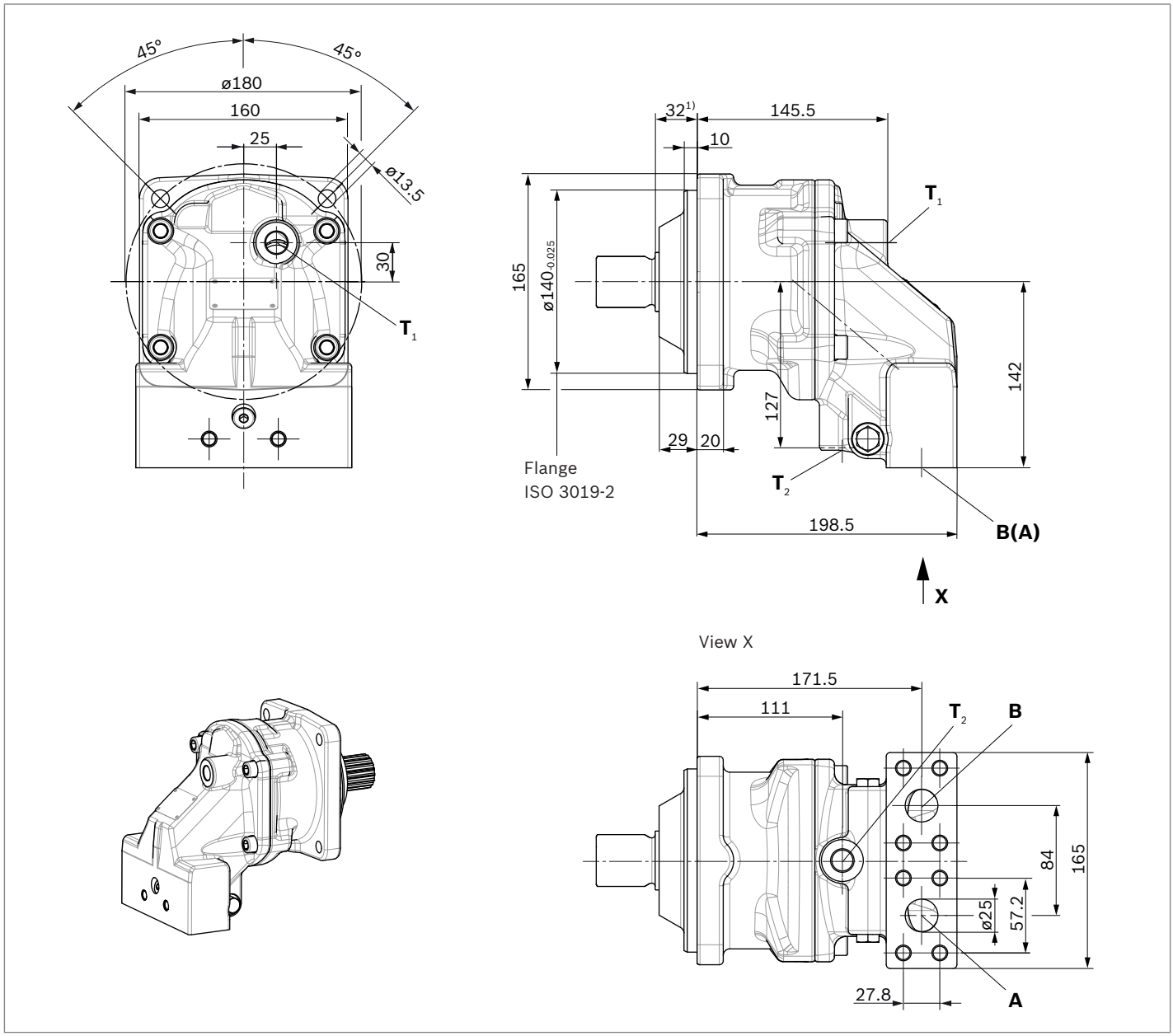

Ports		Standard	Size[2]	$p_{max\ abs}$ [bar][3]	Status[6]
A, B	Working port Fastening thread A/B	SAE J518 DIN 13	1 in M12 × 1.75; 17 deep	500	O
T_1	Drain port	DIN 3852[5]	M18 × 1.5; 12 deep	3	X[4]
T_2	Drain port	DIN 3852[5]	M18 × 1.5; 12 deep	3	O[4]

1) To shaft collar
2) For notes on tightening torques, see instruction manual.
3) Depending on the application, momentary pressure peaks may occur. Keep this in mind when selecting measuring devices and fittings.
4) Depending on installation position, T_1 or T_2 must be connected (see also installation instructions on page 21).
5) The spot face can be deeper than as specified in the standard
6) O = Must be connected (plugged on delivery)
X = Plugged (in normal operation)

A2FM dimensions, SAE flange ports at side

A2FMN sizes 90 and 107
A2FMM sizes 80 and 90
A2FMH sizes 80 and 90

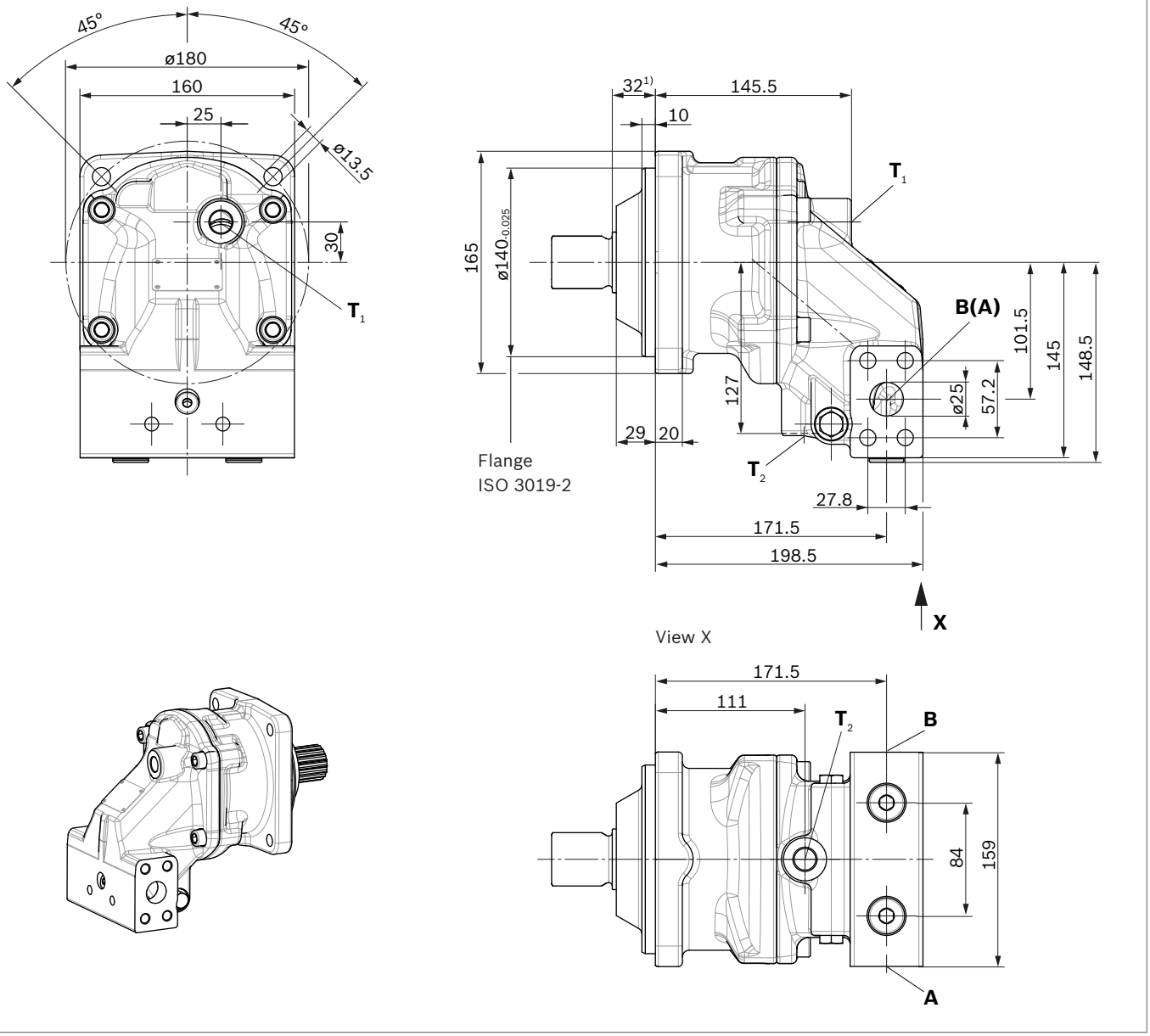

Ports		Standard	Size[2)]	$p_{max\ abs}$ [bar][3)]	Status[6)]
A, B	Working port Fastening thread A/B	SAE J518 DIN 13	1 in M12 × 1.75; 17 deep	500	O
T_1	Drain port	DIN 3852[5)]	M18 × 1.5; 12 deep	3	X[4)]
T_2	Drain port	DIN 3852[5)]	M18 × 1.5; 12 deep	3	O[4)]

1) To shaft collar
2) For notes on tightening torques, see instruction manual.
3) Depending on the application, momentary pressure peaks may occur. Keep this in mind when selecting measuring devices and fittings.
4) Depending on installation position, T_1 or T_2 must be connected (see also installation instructions on page 21).
5) The spot face can be deeper than as specified in the standard
6) O = Must be connected (plugged on delivery)
X = Plugged (in normal operation)

A2FE dimensions, SAE flange ports at bottom

A2FEN sizes 90 and 107
A2FEM sizes 80 and 90
A2FEH sizes 80 and 90

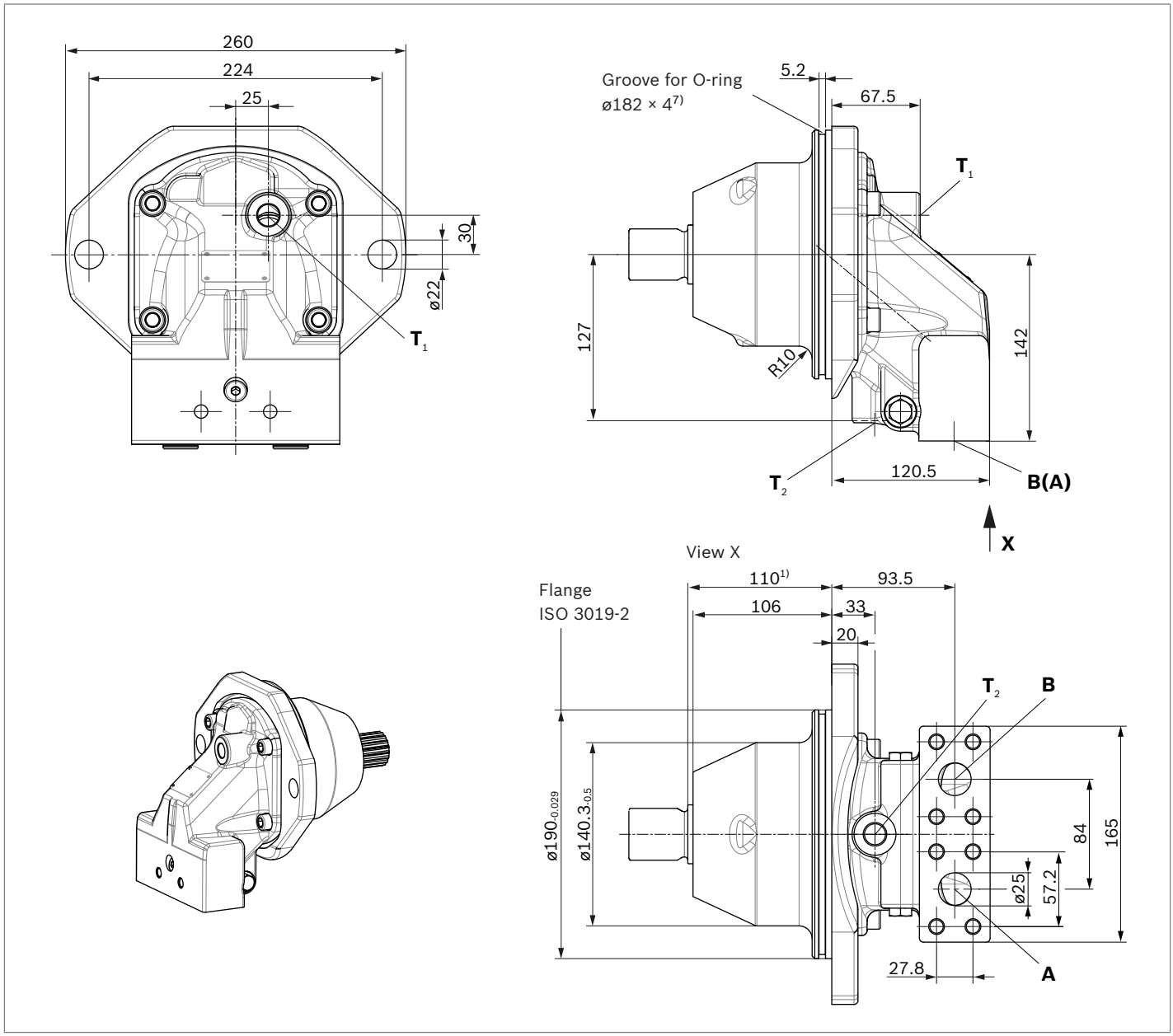

Ports		Standard	Size[2)]	$p_{max\ abs}$ [bar][3)]	Status[6)]
A, B	Working port Fastening thread A/B	SAE J518 DIN 13	1 in M12 × 1.75; 17 deep	500	O
T_1	Drain port	DIN 3852[5)]	M18 × 1.5; 12 deep	3	X[4)]
T_2	Drain port	DIN 3852[5)]	M18 × 1.5; 12 deep	3	O[4)]

1) To shaft collar
2) For notes on tightening torques, see instruction manual.
3) Depending on the application, momentary pressure peaks may occur. Keep this in mind when selecting measuring devices and fittings.
4) Depending on installation position, T_1 or T_2 must be connected (see also installation instructions on page 21).
5) The spot face can be deeper than as specified in the standard
6) O = Must be connected (plugged on delivery)
X = Plugged (in normal operation)
7) O-ring is not included in the scope of delivery.
Bosch Rexroth material number R902601554.

A2FE dimensions, SAE flange ports at side

A2FEN sizes 90 and 107
A2FEM sizes 80 and 90
A2FEH sizes 80 and 90

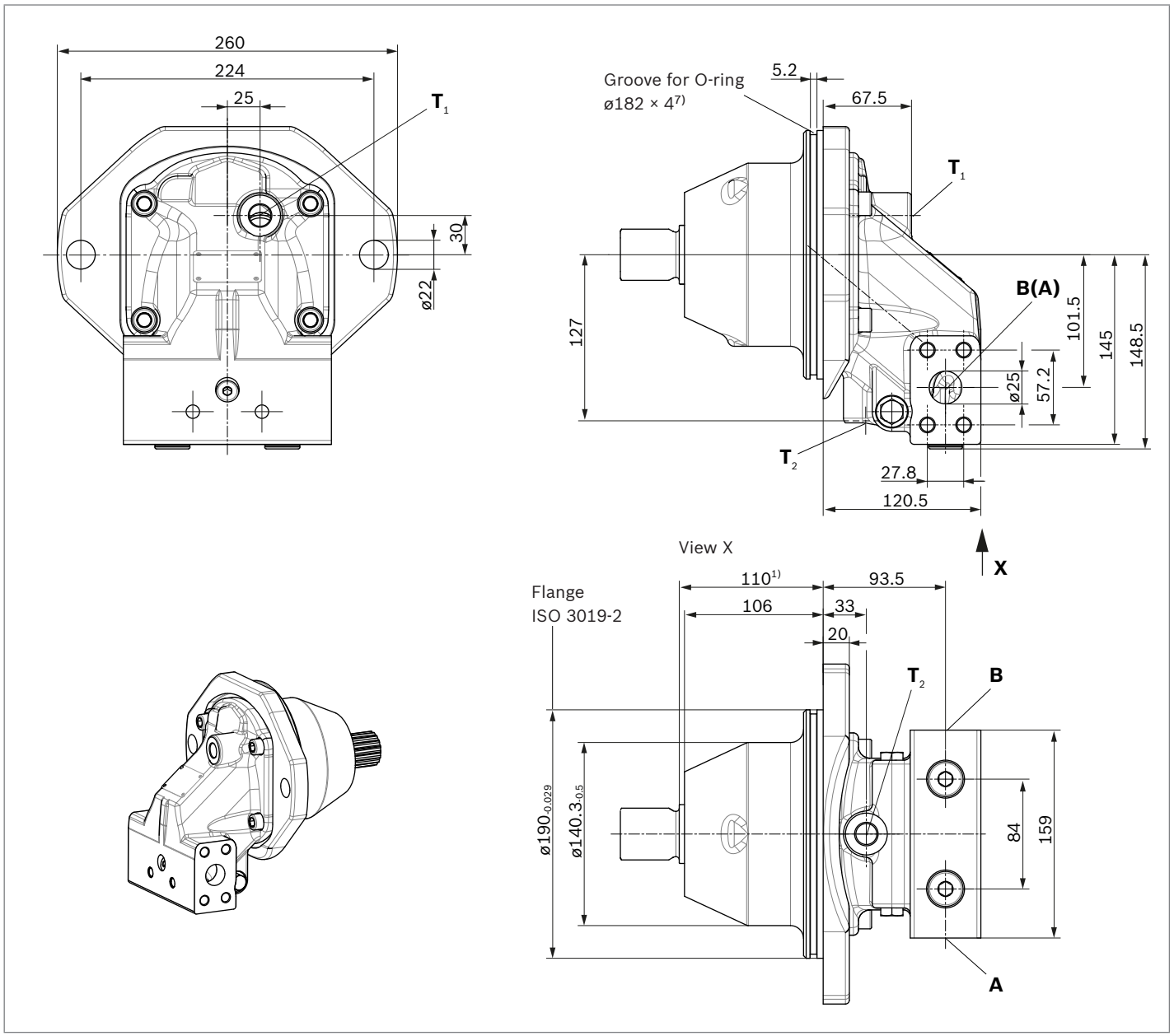

Ports		Standard	Size[2)]	$p_{max\ abs}$ [bar][3)]	Status[6)]
A, B	Working port Fastening thread A/B	SAE J518 DIN 13	1 in M12 × 1.75; 17 deep	500	O
T_1	Drain port	DIN 3852[5)]	M18 × 1.5; 12 deep	3	X[4)]
T_2	Drain port	DIN 3852[5)]	M18 × 1.5; 12 deep	3	O[4)]

1) To shaft collar
2) For notes on tightening torques, see instruction manual.
3) Depending on the application, momentary pressure peaks may occur. Keep this in mind when selecting measuring devices and fittings.
4) Depending on installation position, T_1 or T_2 must be connected (see also installation instructions on page 21).
5) The spot face can be deeper than as specified in the standard.
6) O = Must be connected (plugged on delivery)
X = Plugged (in normal operation)
7) O-ring is not included in the scope of delivery. Bosch Rexroth material number R902601554.

▼ **Splined shaft DIN 5480, size 80**

Z8 – W35×2×16×9g

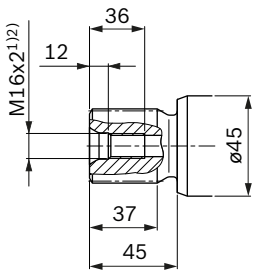

▼ **Parallel keyed shaft, DIN 6885, size 80**

P8 – AS10×8×56

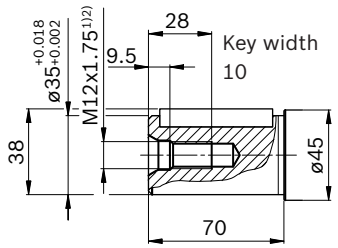

▼ **Splined shaft DIN 5480, sizes 80, 90 and 107**

Z9 – W40×2×18×9g

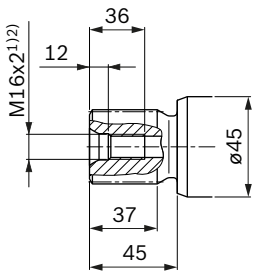

▼ **Parallel keyed shaft, DIN 6885, sizes 80, 90 and 107**

P9 – AS12×8×56

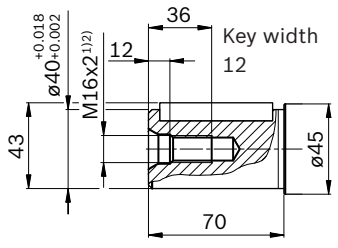

Flushing and boost-pressure valve, integrated

The flushing and boost-pressure valve is used to remove heat from the hydraulic circuit.
In a closed circuit, it is used for case flushing and safeguarding the minimum boost pressure.
Hydraulic fluid is directed from the respective low pressure side into the motor case. This is then fed into the reservoir, together with the leakage. The hydraulic fluid removed from the closed circuit must be replaced by cooled hydraulic fluid from the boost pump.

Circuit diagram

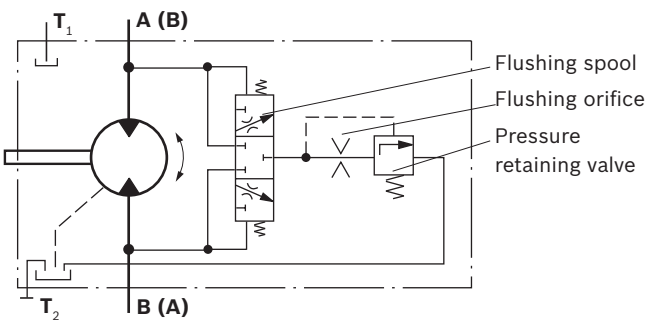

Cracking pressure of pressure retaining valve
(observe when setting the primary valve)

▶ Sizes 45 to 107(N), fixed setting 16 bar

Switching pressure of flushing spool

▶ Sizes 45 to 107(N) Δp = 8±1 bar

Flushing flow

Orifices can be used to adjust the flushing flows as required. The following information is based on:
$\Delta p_{ND} = p_{ND} - p_G$ = 25 bar and ν = 10 mm²/s
(p_{ND} = low pressure, p_G = case pressure)

Size	Throttle ø [mm]	Flushing flow q_v [l/min]
45, 56, 63, 80, 90, 107(N)	1.0	2.6
	1.5	6
	1.7	7.4
	1.8	8.5
	2.3	11.4
	3	12.5

1) Center bore according to DIN 332 (thread according to DIN 13)
2) For notes on tightening torques, see instruction manual.

Speed sensors DSA and DSM

The versions A2F...A and A2F...N (“prepared for speed sensor”, i.e. without sensor) is equipped with splines on the rotary group.
A signal proportional to motor speed can be generated with the fitted DSA/DSM speed sensor. The DSA/DSM sensor registers the speed and direction of rotation.
Type code, technical data, dimensions and details on the connector, plus safety instructions about the sensor can be found in the relevant data sheet 95133 – DSA and 95132 – DSM.
The sensor is mounted on the port provided for this purpose with a mounting bolt. On deliveries without sensor, the port is plugged with a pressure-resistant cover.
We recommend ordering the A2F fixed motor complete with mounted sensor.

Size	A2FM/H	45, 65, 63	80, 90
	A2FN	56, 63, 80	90, 107
Number of teeth		47	53
Dimensions	A	96.6	108.4
	B	54.6	58.8
	C	36.3	30.4
	D	70.3	75
	E	86.9	91.6
	F	61.2	72.6

Dimensions

▼ **Version “B”**
A2FM with speed sensor DSA mounted

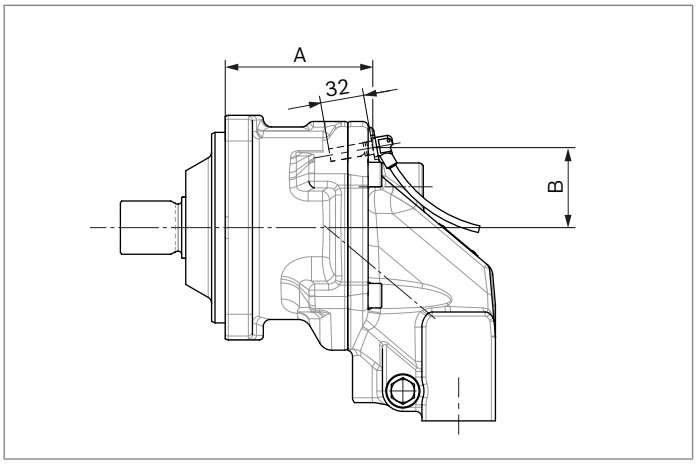

▼ **Version “B”**
A2FE with speed sensor DSA mounted

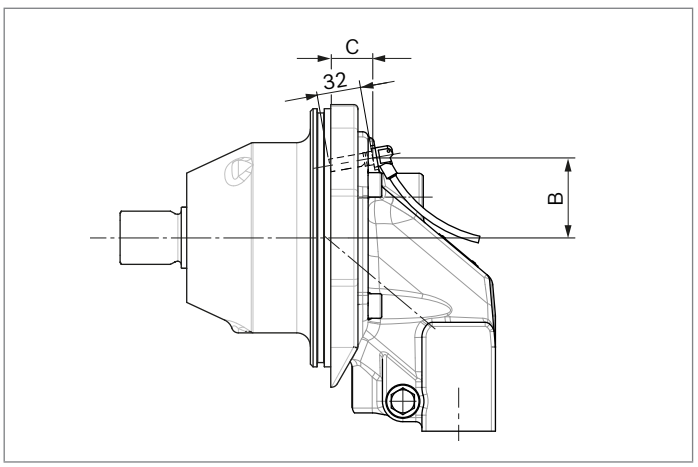

▼ **Version “M”**
A2FM with speed sensor DSM mounted

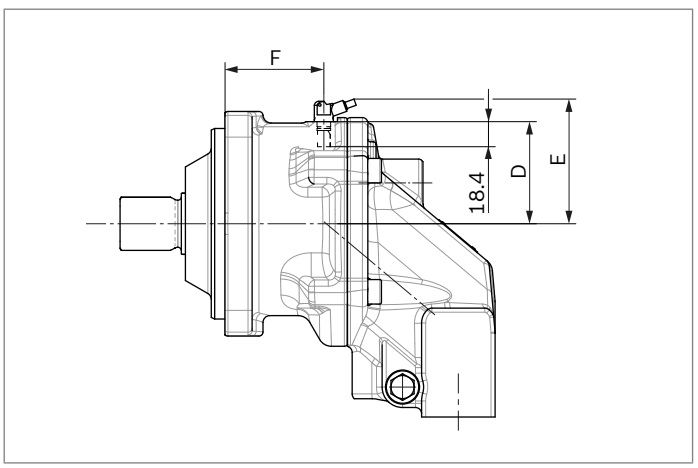

Installation instructions

General

The axial piston unit must be filled with hydraulic fluid and air bled during commissioning and operation. This must also be observed following a longer standstill as the axial piston unit may empty via the hydraulic lines.
Particularly in the installation position “drive shaft upwards”, filling and air bleeding must be carried out completely as there is, for example, a danger of dry running.
The leakage in the housing area must be directed to the reservoir via the highest drain port (**T_1**, **T_2**).
If a shared drain line is used for several units, make sure that the respective case pressure is not exceeded. The shared drain line must be dimensioned to ensure that the maximum permissible case pressure of all connected units is not exceeded in any operational circumstances, particularly at cold start. If this is not possible, separate drain lines must be laid if necessary.
To achieve favorable noise values, decouple all connecting lines using elastic elements and avoid above-reservoir installation.
In all operating conditions, the drain line must flow into the reservoir below the minimum fluid level.

Note

- For A2FM with installation position “shaft upwards” an air bleed port **R** is required (specify in plain text when ordering, special version).
- For A2FE the “shaft upwards” installation position is not permissible.

Key	
F	Filling / air bleeding Note: F is part of the external piping
R	Air bleed port (special version)
T_1, T_2	Drain port
$h_{t\ min}$	Minimum required immersion depth (200 mm)
h_{min}	Minimum required distance to reservoir base (100 mm)

Installation position

See the following examples **1** to **8**.
Additional installation positions are possible upon request.
Recommended installation position: **1** and **2**

Below-reservoir installation (standard)

Below-reservoir installation is when the axial piston unit is installed outside of the reservoir and below the minimum fluid level.

Installation position	Air bleeding	Filling
1 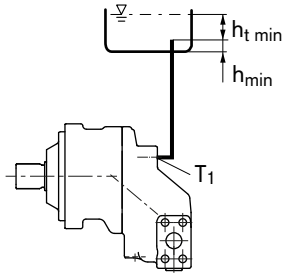	–	**T_1**
2 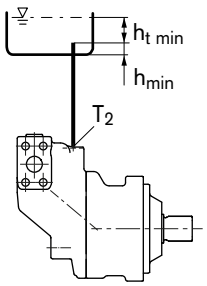	–	**T_2**
3 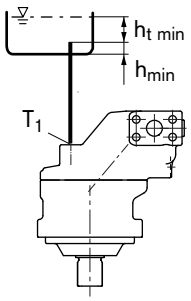	–	**T_1**
4 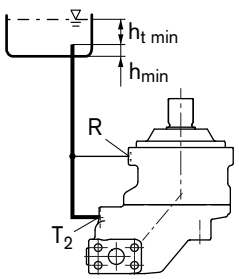	**R**	**T_2**

Above-reservoir installation

Above-reservoir installation means that the axial piston unit is installed above the minimum fluid level of the reservoir. Recommendation for installation position **8** (drive shaft upward): A check valve in the drain line (cracking pressure 0.5 bar) can prevent draining of the housing area.

Note

Port **F** is part of the external piping and must be provided by the customer to make filling and air bleeding easier.

Installation position	Air bleeding	Filling
5 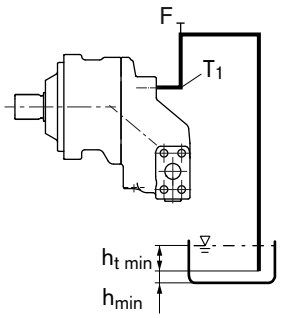	**F**	**T1 (F)**
6 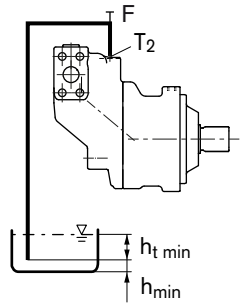	**F**	**T2 (F)**
7 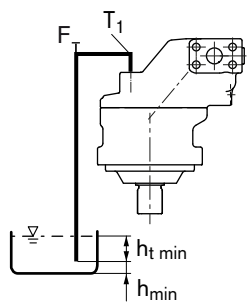	**F**	**T1 (F)**
8 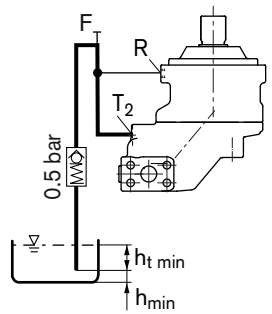	**R**	**T2 (F)**

Project planning notes

- The motor A2FM/A2FE is designed to be used in open and closed circuits.
- The project planning, installation and commissioning of the axial piston unit require the involvement of qualified skilled personnel.
- Before using the axial piston unit, please read the corresponding instruction manual completely and thoroughly. If necessary, request it from Bosch Rexroth.
- Before finalizing your design, please request a binding installation drawing.
- The specified data and notes must be observed.
- Depending on the operating state of the axial piston unit (working pressure, fluid temperature), the characteristic may shift.
- Not all variants of the product are approved for use in safety functions according to ISO 13849. Please consult the responsible contact person at Bosch Rexroth if you require reliability parameters (e.g. $MTTF_d$) for functional safety.
- Working ports:
  - The ports and fixing threads are designed for the specified peak pressure. The machine or system manufacturer must ensure that the connecting elements and lines correspond to the specified operating conditions (pressure, volume flow, hydraulic fluid, temperature) with the necessary safety factors.
  - The working ports and function ports can only be used to accommodate hydraulic lines.
- Preservation: Our axial piston units are supplied as standard with protection to preserve them for a maximum of 12 months. If longer preservative protection is required (maximum 24 months), please specify this in plain text when placing your order. The preservation periods apply under optimal storage conditions, details of which can be found in the data sheet 90312 or the instruction manual.

Safety instructions

- During and shortly after operation, there is a risk of burns on the axial piston unit. Take appropriate safety measures (e.g. by wearing protective clothing).

Fixed Displacement Motor A4FM

RE 91 120/04.00
replaces: 03.95
and RE 91 100

for open and closed circuits

Sizes 22...500
Series 1, Series 3
Nominal pressure up to 400 bar
Peak pressure up to 450 bar

Index

Features	1
Ordering Code	2
Technical Data	3...5
Installation and Commissioning Guidelines	4
Flow and Output Torque	6
Unit Dimensions, Sizes 22, 28	7
Unit Dimensions, Size 40	8
Unit Dimensions, Size 56	9
Unit Dimensions, Size 71	10
Unit Dimensions, Size 125	11
Unit Dimensions, Size 250	12

Features

- Axial Piston Fixed Displacement Motor A4FM of swashplate design is used in open and closed loop circuits for hydrostatic drives.
- Output speed is proportional to input flow and inversely proportional to motor displacement.
- Output torque increases with the pressure drop across the motor between the high and low pressure sides.
- Long service life, optimum efficiencies
- Compact design for special applications where A2FM cannot be applied
- Proven rotary group in swashplate-technology

Ordering Code

	A4F	M		/			W	–				

Hydraulic fluid

Mineral oil, HFD (no code)	
HFA, HFB, HFC-Hydraulic fluid (only sizes 71...500)	**E-**

Axial piston unit

Swashplate design, fixed displacement	**A4F**

Mode of operation

Motor	**M**

Size

≙ Displacement V_g (cm^3)	**22**	**28**	**40**	**56**	**71**	**125**	**250**	**500**
	●	●	●	●	●	●	●	○

Series

Sizes 22...56, 125...500	**3**
Size 71	**1**

Index

Sizes 22...56	**2**
Sizes 71...500	**0**

Direction of rotation

Viewed on shaft end	alternating	**W**

Seals

NBR (Nitril-caoutchouc), shaft sealing in FKM (Fluor-caoutchouc)	Sizes 22...56	**N**
	Sizes 71...500	**P**
FKM (Fluor-caoutchouc)	Sizes 71...500	**V**

Shaft end	**22**	**28**	**40**	**56**	**71**	**125**	**250**	**500**	
Splined shaft SAE	○	○	–	–	–	–	–	–	**S**
Splined shaft SAE	●	●	–	–	–	–	–	–	**T**
Splined shaft DIN 5480	–	–	●	●	●	●	●	○	**Z**
Parallel with key DIN 6885	–	–	–	–	●	●	●	○	**P**

Mounting flange	**22**	**28**	**40**	**56**	**71**	**125**	**250**	**500**	
SAE 2-hole	●	●	●	●	–	–	–	–	**C**
ISO 4-hole	–	–	–	–	●	●	●	–	**B**
ISO 8-hole	–	–	–	–	–	–	–	○	**H**

Service line connections	**22...40**	**56**	**71...500**	
Ports A, B: SAE at rear (with metric fixing screws)	–	●	●	**01**
Ports A, B: SAE at side (on opposite sides) (with metric fixing screws)	●	–	●	**02**

● = available

○ = available on enquiry

– = not available

Fluid

We request that before starting a project detailed information about the choice of pressure fluids and application conditions are taken from our catalogue sheets RE 90220 (mineral oil), RE 90221 (environmentally acceptable hydraulic fluids) and RE 90223 (fire resistance fluids, HF).

When using HF- or environmentally acceptable hydraulic fluids possible limitations for the technical data have to be taken into consideration. If necessary please consult our technical department (please indicate type of the hydraulic fluid used for your application on the order sheet).

The sizes 22..56 are not suitable for operation with HFA, HFB and HFC.

Operation viscosity range

In order to obtain optimum efficiency and service life, we recommend that the operating viscosity (at operating temperature) be selected from within the range:

ν_{opt} = operating viscosity 16...36 mm²/s

referred to the loop temperature (closed circuit) or tank temperature (open circuit).

Viscosity limits

The limiting values for viscosity are as follows:

Size 22...56

ν_{min} = 5 mm²/s, short term at a max. permissible temp. of t_{max}= 115°C

ν_{max} = 1600 mm²/s, short term on cold start (t_{min} = -40°C)

Size 71...500

ν_{min} = 10 mm²/s, short term at a max. permissible drain temp. t_{max} = 90°C

ν_{max} = 1000 mm²/s, short term on cold start (t_{min} = -25°C)

Please note that the max. fluid temperature is also not exceeded in certain areas (for instance bearing area).

At temperature of -25°C up to -40°C special measures may be required for certain installation positions, please contact us.

Notes on the selection of the hydraulic fluid

In order to select the correct fluid, it is necessary to know the operating temperature in the loop (closed circuit) or the tank temperature (open circuit) in relation to the ambient temperature.

The hydraulic fluid should be selected so that within the operating temperature range, the operating viscosity lies within the optimum range (ν_{opt}) (see shaded section of the selection diagram). We recommend that the highest possible viscosity range should be chosen in each case.

Example: At an ambient temperature of X°C the operating temperature is 60°C. Within the operating viscosity range (ν_{opt}; shaded area), this corresponds to viscosity ranges VG 46 or VG 68. VG 68 should be selected.

Important: The leakage oil (case drain oil) temperature is influenced by pressure and motor speed and is always higher than the circuit temperature. However, at no point in the circuit may the temperature exceed 115°C for sizes 22...56 or 90°C for sizes 71...500.

If it is not possible to comply with the above condition because of extreme operating parameters or high ambient temperatures we recommend housing flushing. Please consult us.

Filtration

The finer the filtration the better the achieved purity grade of the pressure fluid and the longer the life of the axial piston unit. To ensure the functioning of the axial piston unit a minimum purity grade of:

9 to NAS 1638

18/15 to ISO/DIS 4406 is necessary.

At very high temperatures of the hydraulic fluid (90°C to max. 115°C, not permissible for sizes 71...500) at least cleanless class

8 to NAS 1638

17/14 to ISO/DIS 4406 is necessary.

If above mentioned grades cannot be maintained please consult supplier.

Selection diagram

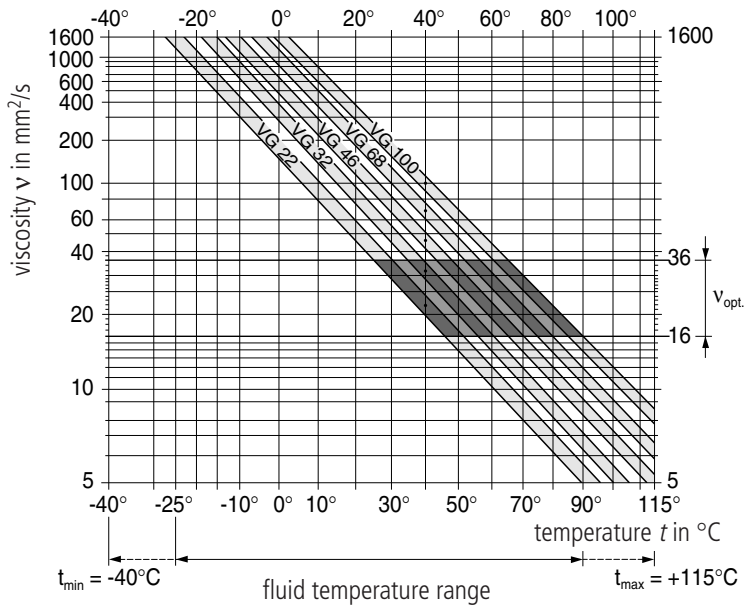

valid for operation with mineral oils

Flushing of the bearings (Sizes 125...500)

operating conditions, flushing quantities and notes on bearing flushing see RE 92 050 (A4VSO).

Operating pressure range

Maximum pressure at port A or B (Pressure data to DIN 24312)

Size		22...56	71...500
Nominal pressure p_N	*bar*	400 [1])	350
Peak pressure p_{max}	*bar*	450 [1])	400

[1]) Size 28 with S-shaft: 315/350 bar

The summ of the pressures at ports A and B may not exceed 700 bar.

Direction of flow

clockwise rotation	anti-clockwise rotation
A to **B**	**B** to **A**

Symbol

Size 22...56

A, B Service line ports
T_1, T_2 Case drain (1 port plugged)

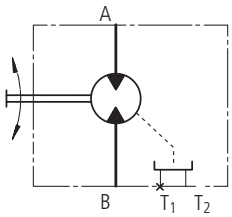

Size 71...500

A, B Service line ports
M_A,M_B Pressure gauge, working pressure
T, R(L) Case drain, Air bleed (1port plugged)
U Flushing port (Sizes71...500)

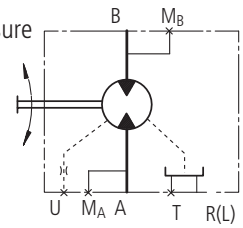

Case drain pressure

The max. permissible leakage pressure (housing pressure) is dependent on speed (see diagram). The pressure in the housing must be equal to or greater than the external pressure on the shaft sealing ring.

Max. leakage pressure (housing pressure)

$p_{abs.\ max.}$ _____ 6 bar (sizes 22...56)
_____ 4 bar(sizes71...500)

A leakage line to the tank is necessary.

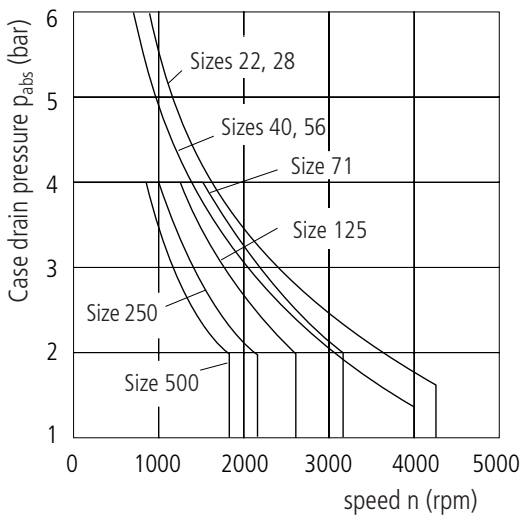

General

At start-up and during operation the motor housing has imperatively to be filled up with hydraulic fluid (filling of the case chamber). Start-up has to be carried out at low speed and without load till the system is completely bleeded.

At a longer standstill the case may discharge via operating line. At new start-up a sufficient filling of the housing has to be granted.

The leakage oil in the housing has to be discharged to the tank via highest positioned case drain port.

Installation position

- Sizes 22...56: Shaft horizontal or shaft down
- Sizes 71 (series1): Shaft horizontal, vertical installation position as to agreement
- Sizes 125...500: Optional, at vertical installation position bearing flushing is recommended at port U (as to RD 9205)

Installation below tank level

Motor below min. oil level in the tank (standard)

➔ Fill up axial piston motor before start-up via highest positioned case drain port

➔ Operate motor at low speed till motor system is completely filled up

➔ Minimum immerson depth of the drain line in the tank: 200mm (relative to the min. oil level in the tank).

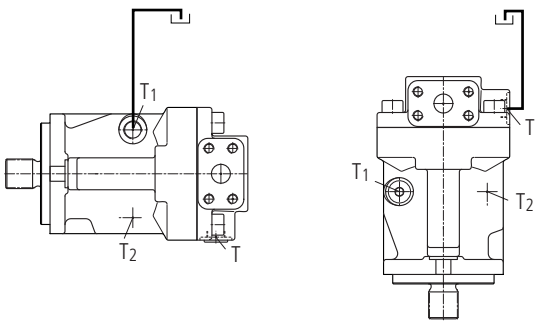

Installation on top of tank level

Motor on top of min. oil level in the tank

➔ Actions as installation below tank level

➔ Note: installation position "drive shaft up" for sizes 22...56 not permissible

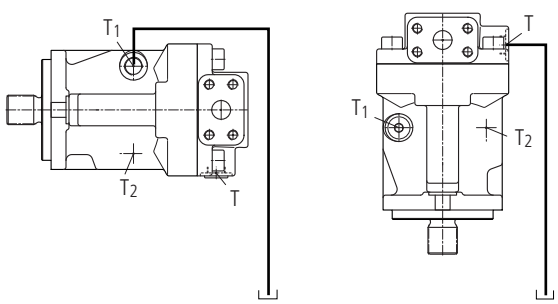

valid for operation with mineral oil

Table of values (theoretical values, without considering η_{mh} and η_v; values rounded)

Size			22	28	40	56	71	125	250	500
Displacement	V_g	cm^3	22	28	40	56	71	125	250	500
Max. speed	$n_{max\ continuous}$	rpm	4250	4250	4000	3600	3200	2600	2200	1800
	$n_{max\ interm.}$ [1])	rpm	5000	5000	5000	4500	–	–	–	–
Max. flow (at n_{max})	$q_{V\ max}$	L/min	93	119	160	202	227	325	550	900
Torque constants	T_K	Nm/bar	0,35	0,445	0,64	0,89	1,13	1,99	3,97	7,95
Torque (at Δp = 400 bar)	T_{max}	Nm	140	178	255	356	395[2])	696[2])	1391[2])	2783[2])
Filling volume		L	0,3	0,3	0,4	0,5	2,0	3,0	7,0	11,0
Moment of inertia about drive axis	J	kgm^2	0,0015	0,0015	0,0043	0,0085	0,0121	0,0300	0,0959	0,3325
Actual starting torque at n = 0 rpm (Δp = 350 bar)		Nm (approx.)					320	564	1127	
Weight (approx.)	m	kg	11	11	15	21	34	61	120	

[1]) Intermittent max. speed at overspeed: Δp = 70…150 bar [2]) Δp = 350 bar

Calculation of size

Flow $q_v = \frac{V_g \bullet n}{1000 \bullet \eta_v}$ in L/min

Output speed $n = \frac{q_V \bullet 1000 \bullet \eta_V}{V_g}$

Output torque $T = \frac{V_g \bullet \Delta p \bullet \eta_{mh}}{20 \bullet \pi}$ in Nm

$= T_K \bullet \Delta p \bullet \eta_{mh}$

Output power $P = \frac{T \bullet n}{9549} = \frac{2\pi \bullet T \bullet n}{60\,000}$ in kW

$= \frac{q_v \bullet \Delta p \bullet \eta_t}{600}$

V_g = geometric displacement per rev. in cm^3
Δp = pressure differential in bar
n = speed in rpm
η_v = volumetric efficiency
η_{mh} = mech.-hyd. efficiency
η_t = overall efficiency

Output drive

permissible axial and radial loading on drive shaft

Size					22	28	40	56
Distance of F_q (from shaft shoulder)	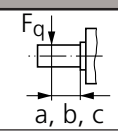	a	mm		17,5	17,5	17,5	17,5
		b	mm		30	30	30	30
		c	mm		42,5	42,5	42,5	42,5
Max. permissible radial force at distance	a	$F_{q\ max}$	N		2500	2050	3600	5000
	b	$F_{q\ max}$	N		1400	1150	2890	4046
	c	$F_{q\ max}$	N		1000	830	2416	3398
Max. permissible axial load	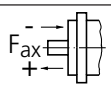	- $F_{ax\ max}$	N		1557	1557	2120	2910
		+ $F_{ax\ max}$	N		417	417	880	1490

Size				71	125	250	500
Max. axial force at housing pressure p_{max} 1 bar abs.	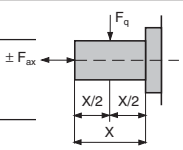	± $F_{ax\ max}$	N	1400	1900	3000	4000
Max. axial force at housing pressure p_{max} 4 bar abs.		+ $F_{ax\ max}$	N	810	1050	1850	2500
		– $F_{ax\ max}$	N	1990	2750	4150	5500
Max. radial force		$F_{q\ max}$	N	1700	2500	4000	5000

Size 71

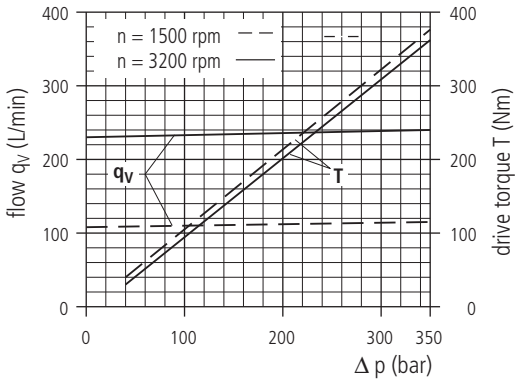

Size 125

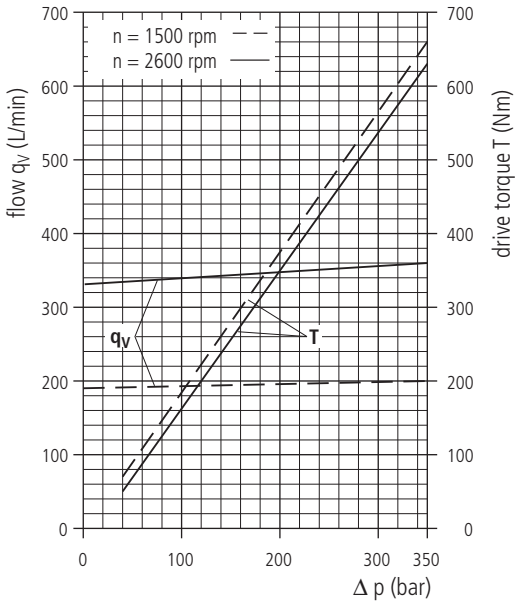

Size 250

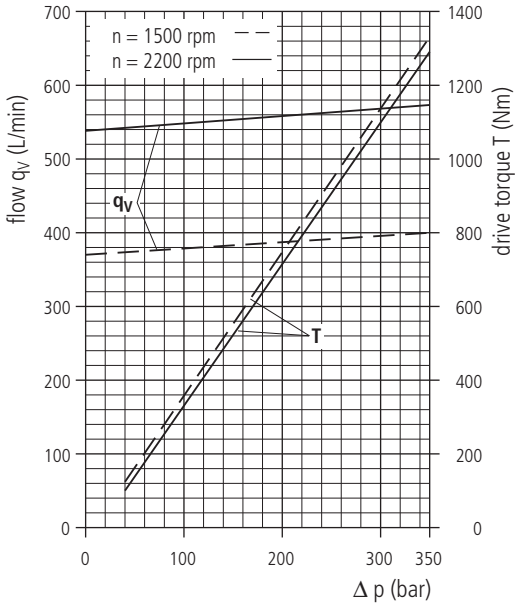

Size 500

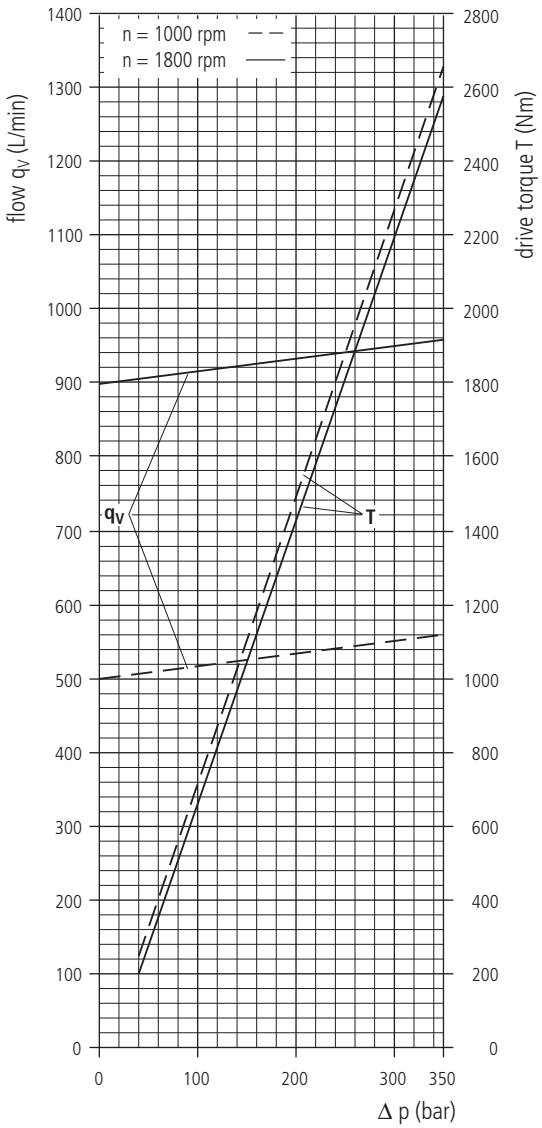

(Fluid: Hydraulic oil ISO VG 46 DIN 51519, t = 50°C)

Before finalising your design, please request a certified drawing.

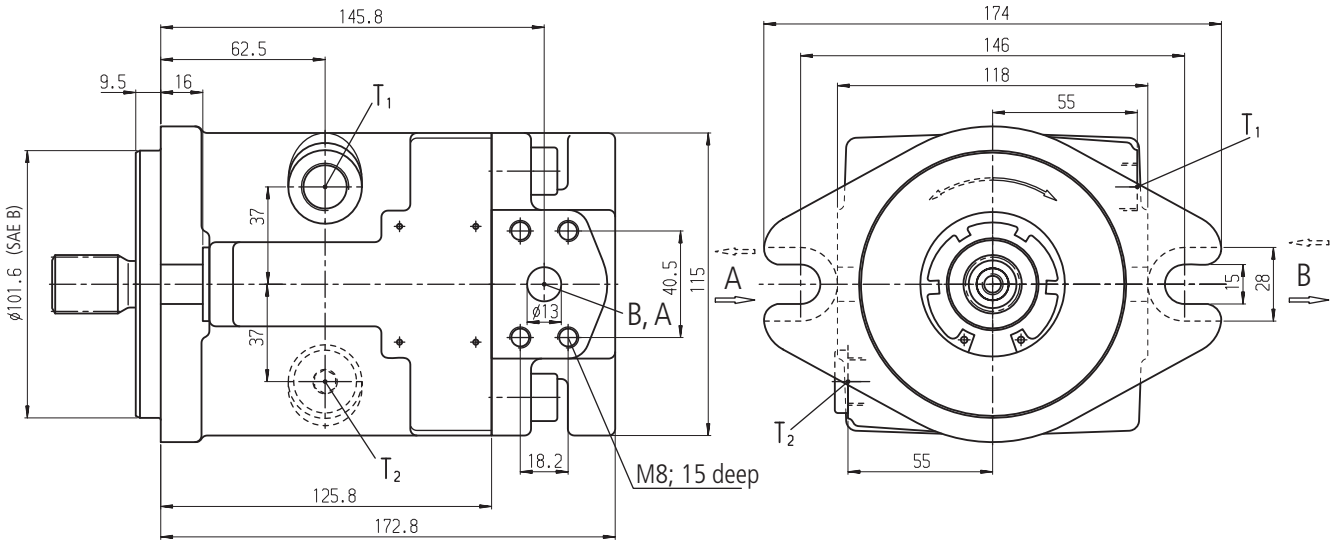

2

Connections

A, B	Service line ports	SAE $^1/_2$" 420 bar (6000 psi) high pressure series
T_1, T_2	Leakage port / oil filling port	M18x1,5; 12 deep

Shaft ends

S

Splined shaft SAE $^7/_8$",
30° pressure angle,
13 teeth, 16/32 pitch,
flat root, side fit,
tolerance class 5
ANSI B92.1a-1976

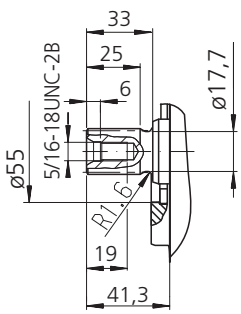

T

Splined shaft SAE 1"
30° pressure angle,
15 teeth, 16/32 pitch,
flat root, side fit,
tolerance class 5
ANSI B92.1a-1976

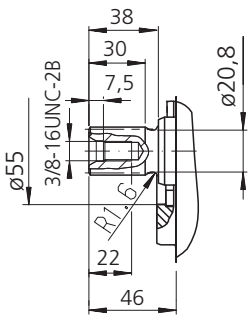

Before finalising your design, please request a certified drawing.

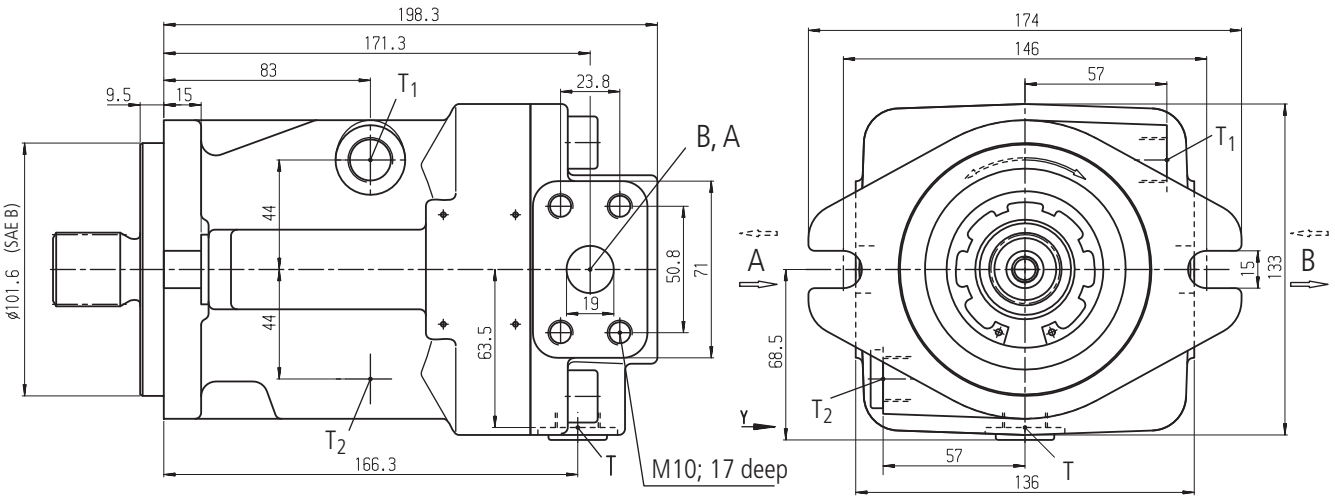

Connections

A, B	Service line ports	SAE $^3/_4$" 420 bar (6000 psi) high pressure serie
T, T_1, T_2	Leakage port / oil filling port	M18x1,5; 15 deep

Shaft ends

Z

Splined shaft
W 30x2x30x14x9g
DIN 5480

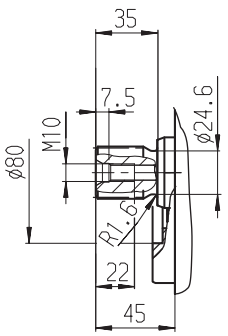

Before finalising your design, please request a certified drawing.

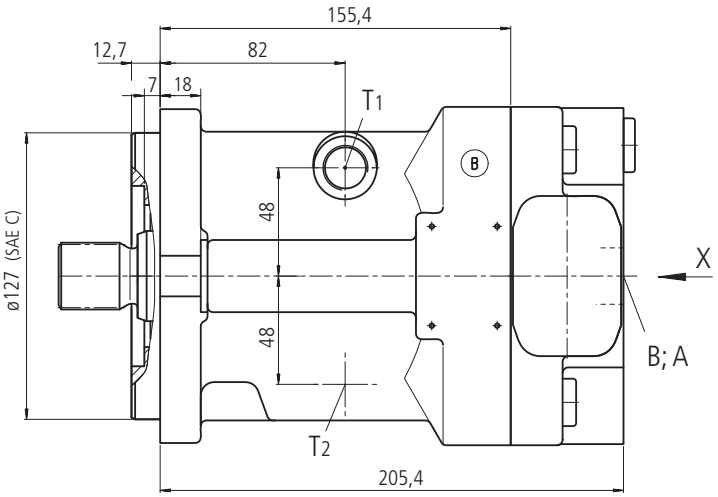

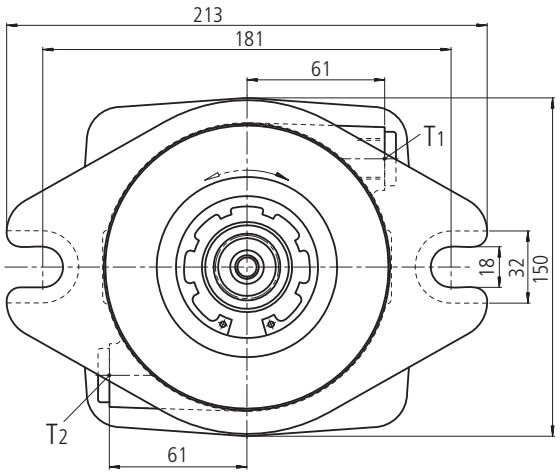

View X

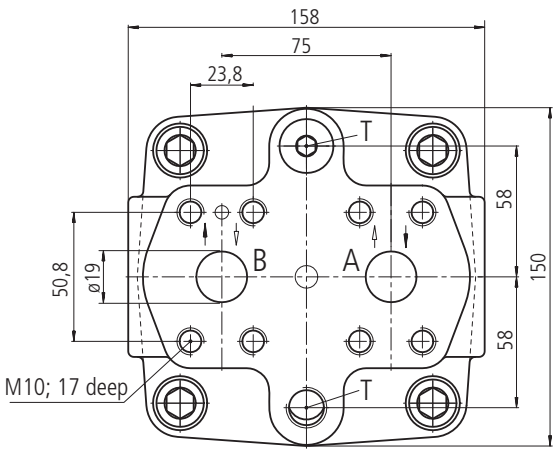

Connections

A, B	Service line ports	SAE $^3/_4$" 420 bar (6000 psi) high pressure serie
T, T_1, T_2	Leakage port / oil filling port	M 18x1,5 ; 12 deep

Shaft ends

Z

Splined shaft
W 30x2x30x14x9g
DIN 5480

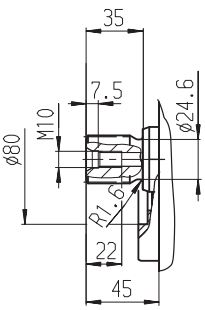

Before finalising your design, please request a certified drawing.

port plate 01

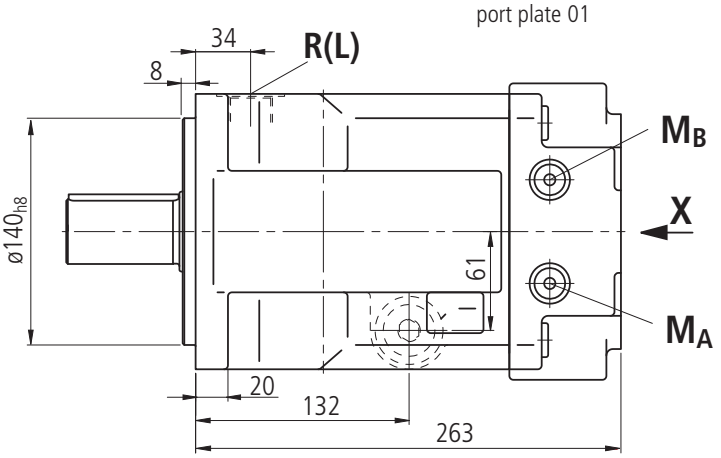

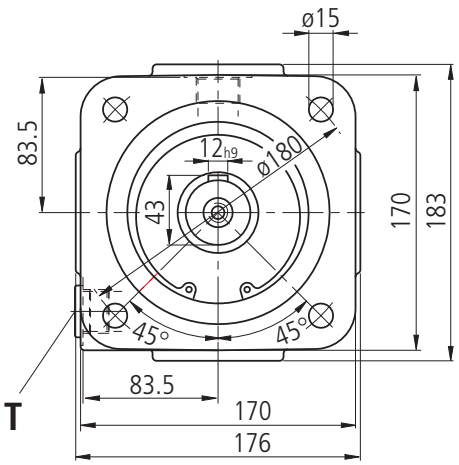

port plate 02

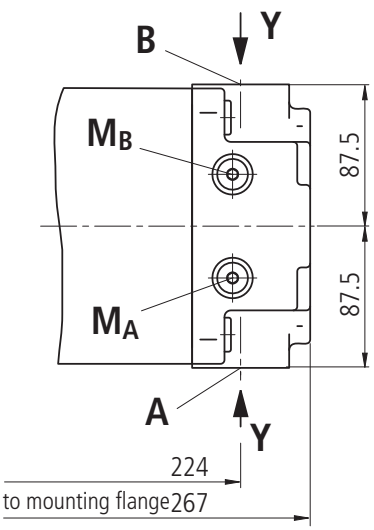

View Y

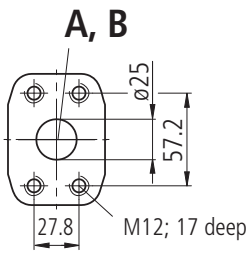

port plate 01
View X

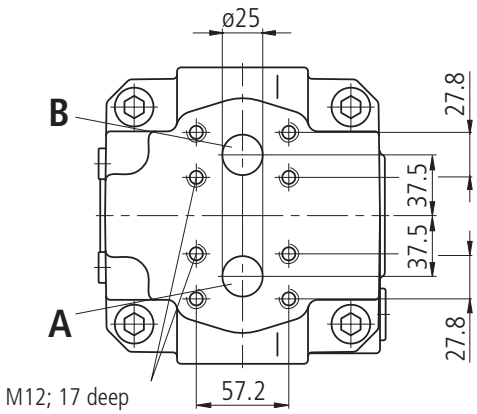

Connections

A, B	service line ports	SAE 1" (high pressure series)
R (L)	oil filling and bleed	M27x2
T	oil drain (plugged)	M27x2
M_A, M_B	measuring port for pressure (plugged)	M14x1,5

Shaft end

P

Parallel shaft with key
AS 12x8x68
DIN 6885

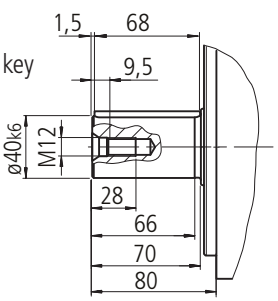

Z

Splined shaft
W40x2x30x18x9g
DIN 5480

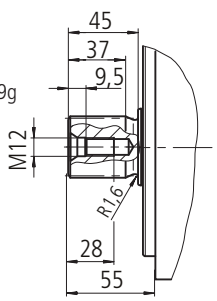

Before finalising your design, please request a certified drawing.

port plate 01

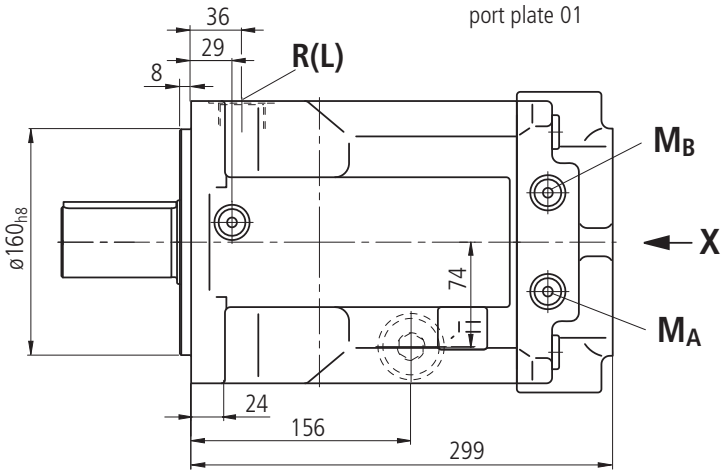

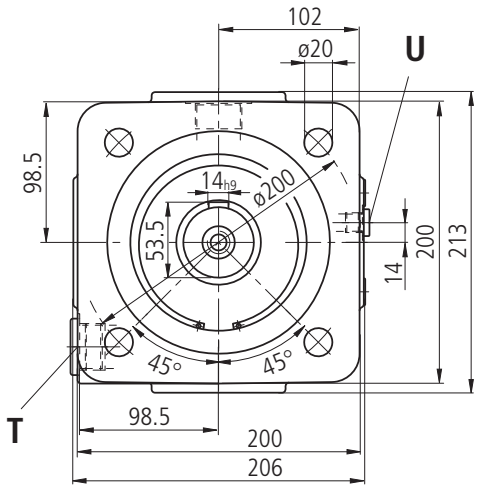

port plate 02

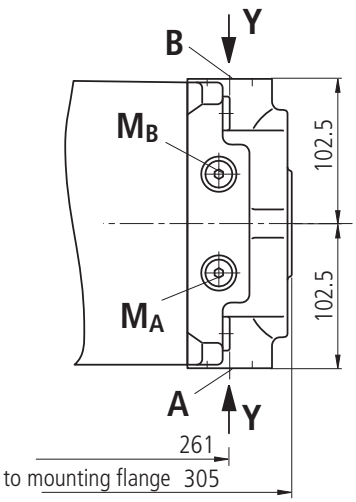

View Y

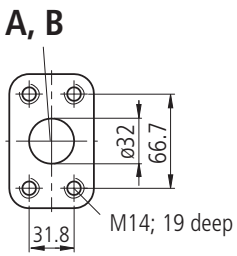

port plate 01
View X

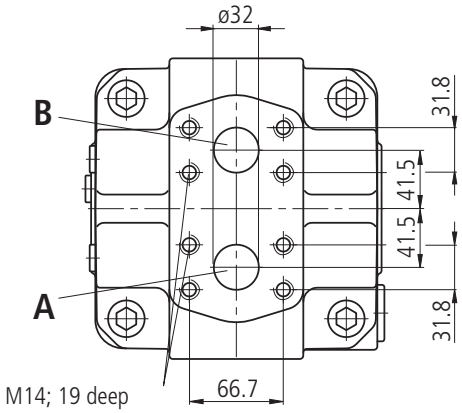

Connections

A, B	service line ports	SAE 1 $^1/_4$" (high pressure series)
R (L)	oil filling and bleed	M33x2
T	oil drain (plugged)	M33x2
M_A, M_B	measuring port for pressure (plugged)	M14x1,5
U	Flushing port, flushing of the bearings (plugged)	M14x1,5

Shaft end

P

Parallel shaft with key
14x9x80
DIN 6885

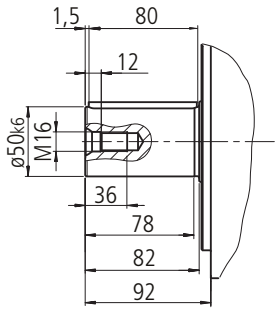

Z

Splined shaft
W50x2x30x24x9g
DIN 5480

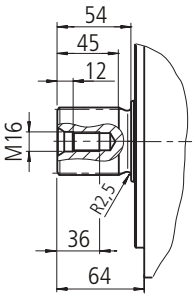

Before finalising your design, please request a certified drawing.

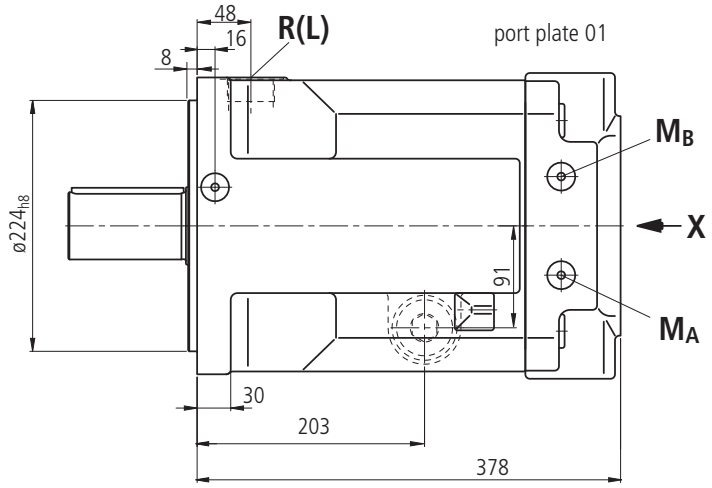

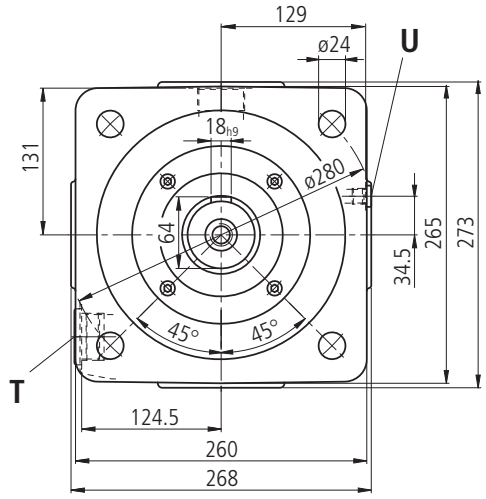

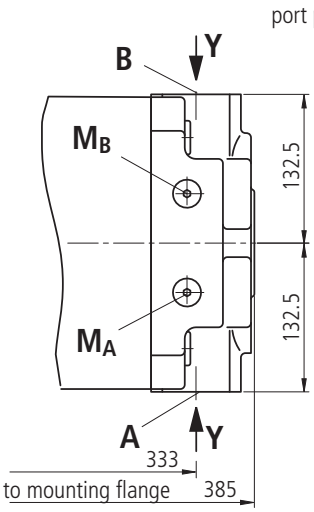

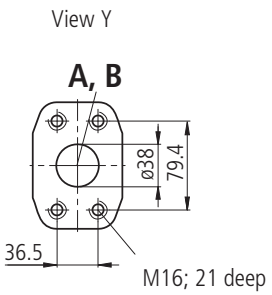

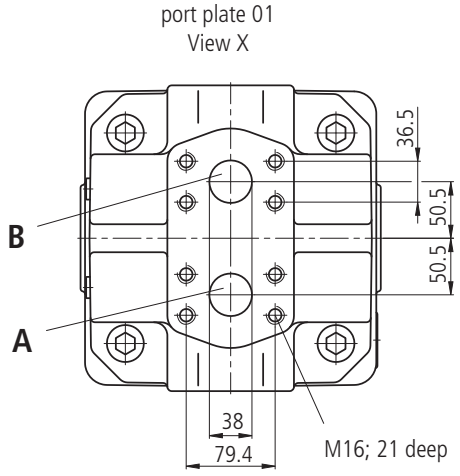

Connections

A, B	service line ports	SAE 1 $^1/_2$" (high pressure series)
R (L)	oil filling and bleed	M42x2
T	oil drain (plugged)	M42x2
M_A, M_B	measuring port for pressure (plugged)	M14x1,5
U	Flushing port, flushing of the bearings (plugged)	M14x1,5

Shaft end

P

Parallel shaft with key
AS 18x11x100
DIN 6885

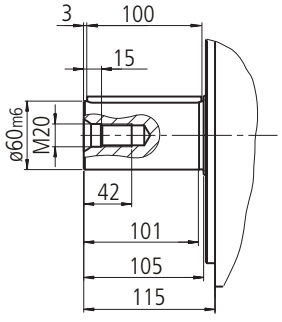

Z

Splined shaft
W60x2x30x28x9g
DIN 5480

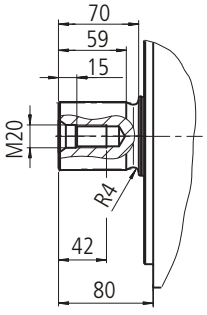

Fixed displacement motor
Axial piston design
A10FM / A10FE

Data sheet

A10FM 23...63

A10FE 10...45
(2-hole-flange)

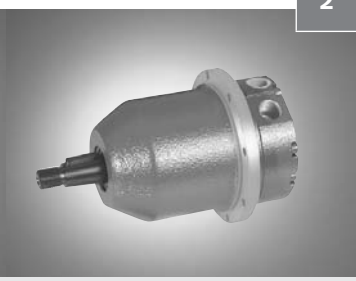

A10FE 11...18
(8-hole-flange)

Series 52
Sizes 10 to 63
Nominal pressure 280 bar
Maximum pressure 350 bar
Open and closed circuit

Contents

Type code for standard program	2
Technical data	4
Dimensions A10FM sizes 23 to 63	8
Dimensions A10FE sizes 10 to 63	14
Flushing and boost pressure valve	24
Anti cavitation valve	24
Speed sensor	25
Installation instructions	26
General instructions	28

Features

- Fixed displacement motor in axial piston swashplate design for hydrostatic drives in open and closed circuit operation
- The output speed is proportional to the inlet flow
- The output torque increases with the pressure differential between the high and low pressure sides
- For use in mobile and industrial applications
- Long service life
- High permissible output speeds
- Well proven A10-rotary group technology
- High power to weight ratio – compact design
- Plug-in version for space saving installation
- Low noise level
- Mechanical and hydraulic connections also acc. to SAE standards
- Speed sensor optional
- Integrated anti cavitation valve optional, i.e. for fan drives

Ordering code for standard program

A10F	M		/	52		–	V		C			
01	02	03		04	05		06	07	08	09	10	11

Axial piston unit

01	Swashplate design, fixed displacement, nominal pressure 280 bar, maximum pressure 350 bar	**A10F**

Operating mode

02	Motor, open and closed circuit	**M**

Size (NG)

03	Theoretical displacement see page 6	**018**	**023**	**028**	**037**	**045**	**058**	**063**	

Series

04	Series 5, Index 2	**52**

Direction of rotation

05	Viewed on drive shaft	clockwise	**R**[1)]
		counter clockwise	**L**[1)]
		bidirectional	**W**

Seals

06	FKM (Fluoro-rubber)	**V**

	Drive shaft	**018**	**023**	**028**	**037**	**045**	**058**	**063**	
07	Splined shaft to ISO 3019-1 (SAE J744)	❍	●	●	●	●	●	●	**R**
	Splined shaft to ISO 3019-1 (SAE J744)	–	❍	❍	●	●	●	●	**W**
	Tapered with woodruff key and threaded end	❍	●	●	●	●	●	●	**C**

	Mounting flange	**018**	**023**	**028**	**037**	**045**	**058**	**063**	
08	SAE 2-hole	❍	●	●	●	●	●	●	**C**

	Ports for service lines	**018**	**023**	**028**	**037**	**045**	**058**	**063**	
09	SAE-flange ports A and B on side, same side Mounting bolts metric	–	●	●	●	●	●	●	**10N00**
	Threaded ports A and B,metric, on side, same side	❍	●	●	●	●	●	●	**16N00**

	Ventile	**018**	**023**	**028**	**037**	**045**	**058**	**063**	
10	Without valves	❍	●	●	●	●	●	●	**0**
	With integrated flushing valve	–	●	●	●	●	●	●	**7**
	With integrated anti cavitation valve	❍	●	●	●	●	●	●	**2**

	Speed sensor	**018**	**023**	**028**	**037**	**045**	**058**	**063**	
11	Without speed sensor	❍	●	●	●	●	●	●	
	Prepared for speed sensor (for inductive speed sensor ID)	❍	●	●	●	●	❍	❍	**D**

● = available ❍ = on request – = not available

1) Only necessary in conjunction with valve configuration „2“ (integrated anti cavitation valve)

Ordering code for standard program

A10F	E		/	52		–	V					
01	02	03		04	05		06	07	08	09	10	11

Axial piston unit

01	Swashplate design, fixed displacement, nominal pressure 280 bar, maximum pressure 350 bar	A10F

Operating mode

02	Motor, open and closed circuit	E

Size (NG)

		010	011	014	016	018	023	028	037	045	058	063
03	Theoretical displacement see page 6											

Series

04	Series 5, Index 2	52

Direction of rotation

05	Viewed on drive shaft	clockwise	R[1)]
		counter clockwise	L[1)]
		bidirectional	W

Seals

06	FKM (Fluoro-rubber)	V

	Drive shaft	010	011	014	016	018	023	028	037	045	058	063	
07	Splined shaft to ISO 3019-1 (SAE J744)	❍	●	●	●	●	●	●	●	●	●	●	R
	Splined shaft to ISO 3019-1 (SAE J744)	–	–	–	–	–	❍	❍	●	●	●	●	W
	Tapered with woodruff key and threaded end	●	●	●	●	●	●	●	●	●	●	●	C

	Mounting flange	010	011	014	016	018	023	028	037	045	058	063	
08	SAE 2-hole	●	●	●	●	●	–	–	–	–	–	–	C[2)]
	Special 2-hole	–	–	–	–	–	●	●	●	●	●	●	F
	Special 8-hole	–	●	●	●	●	–	–	–	–	–	–	H

	Ports for service lines	010	011	014	016	018	023	028	037	045	058	063	
09	SAE-flange ports A and B, on side, same side mounting bolts metric	–	–	–	–	–	●	●	●	●	●	●	10N00
	Threaded ports A and B, metric, on side, same side	●	●	●	●	●	●	●	●	●	●	●	16N00

	Valves	010	011	014	016	018	023	028	037	045	058	063	
10	Without valves	❍	●	❍	●	●	●	●	●	●	●	●	0
	With integrated flushing valve	–	–	–	–	–	●	●	●	●	●	●	7
	With integrated anti cavitation valve	●	●	●	●	●	●	●	●	●	●	●	2

	Speed sensor	010	011	014	016	018	023	028	037	045	058	063	
11	Without speed sensor	●	●	●	●	●	●	●	●	●	●	●	
	Prepared for speed sensor (for inductive speed sensor ID)	–	–	–	–	❍	●	●	●	●	❍	❍	D

● = available ❍ = on request – = not available

1) Only necessary in conjunction with valve configuration „2“ (integrated anti cavitation valve)

2) R-shaft with C-flange on sizes 10 to 18 in preparation

Technical data

Fluids

Prior to project design, please see our technical data sheets RE 90220 (mineral oil) and RE 90221 (environmentally acceptable fluis) for detailed information on fluids and operating conditions.

For operation on environmentally acceptable fluids please consult us (when ordering, please state in clear text the fluid to be used).

Operating viscosity range

To achieve optimum values for efficiency and service life we recommend an operation viscosity (at operating temperature) within the range,

ν_{opt} = opt. operating viscosity 16 ... 36 mm²/s

referred to the tank temperature (open circuit).

Limit of viscosity range

For critical operation conditions the following values apply:

ν_{min} = 5 mm²/s (closed circuit)
10 mm²/s (open circuit)
for short periods (t ≤ 1 min)
at a max. perm. temperature of 115 °C.

Please note that the max. leakage fluid temperature of 115 °C is also not exceeded in certain areas (for instance bearing area).The fluid temperature in the bearing area is approx. 5 K higher than the average leakage fluid temperature

ν_{max} = 1600 mm²/s
for short periods (t ≤ 1 min)
on cold start
(t_{min} = p ≤ 30 bar, n ≤ 1000 min^{-1}, –25 °C).

At temperatures between -40 °C and -25 °C special measures are required, please consult us for further information.

For detailed information on operation with low temperatures see data sheet RE 90300-03-B.

Selection diagram

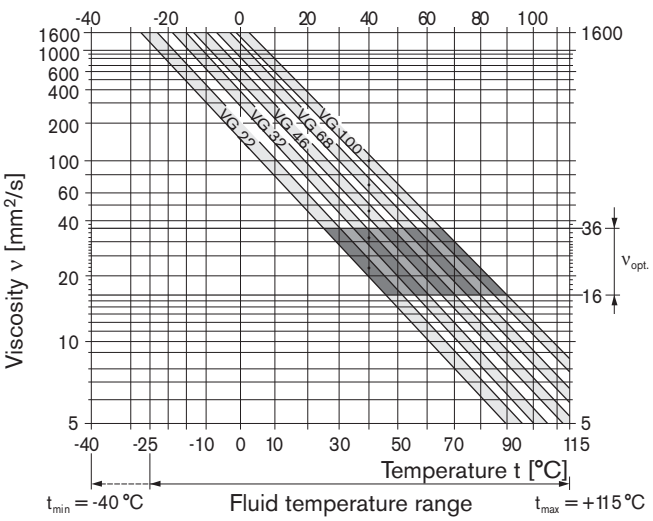

Notes on the selection of the hydraulic fluid

In order to select the correct fluid, it is necessary to know the operating temperature in the tank (open circuit) in relation to the ambient temperature.

The fluid should be selected so that witin the operating temperature range, the viscosity lies within the optimum range (ν_{opt}), see shaded section of the selection diagram. We recommend to select the higher viscosity grade in each case.

Example: at an ambient temperature of X °C the operating temperature in the tank is 60 °C. In the optimum viscosity range (ν_{opt}; shaded area) this corresponds to viscosity grades VG 46 resp. VG 68; VG 68 should be selected.

Important: The leakage oil (case drain oil) temperature is influenced by pressure and input speed and is always higher than the tank temperature. However, at no point of the component may the temperature exceed 115 °C.

If it is not possible to comply with the above conditions because of extreme operating parameters please consult us.

Filtration of the hydraulic fluid

Filtration improves the cleanliness level of the hydraulic fluid, which, in turn, increases the service life of the axial piston unit.

To ensure the functional reliability of the axial piston unit, a gravimetric evaluation is necessary for the hydraulic fluid to determine the amount of contamination by solid matter and to determine the cleanliness level according to ISO 4406. A cleanliness level of at least 20/18/15 to ISO 4406 is to be maintained.

If above requirements cannot be maintained please consult us.

Technical data

Operating pressure range

Pressure at service line port (pressure port) A or B

Nominal pressure p_{nom} _____ 280 bar absolute

Maximum pressure p_{max} _____ 350 bar absolute
Single operating period _____ 2,5 ms
Total operating period _____ 300 h
Minimum pressure (high pressure side) _____ 10 bar[2)]

Rate of pressure change $R_{A\ max}$ _____ 16000 bar/s

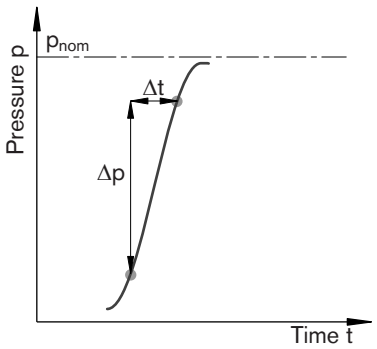

Outlet pressure

at n_{max}
Minimum pressure at low pressure side $p_{abs\ max}$ _____ 18 bar

Case drain pressure

Maximum permissible case drain pressure
(at port L, L_1):

$p_{max\ abs}$ motor operation in open circuit _____ 4 bar $_{abs}$
$p_{max\ abs}$ motor operation in closed circuit _____ 4 bar $_{abs}$
$p_{max\ abs}$ pump/motor operation in open circuit _____ 2 bar $_{abs}$

Direction of flow

viewed on drive shaft	
clockwise rotation	**counter clockwise rotation**
A to **B**	**B** to **A**

Definitions

Nominal pressure p_{nom}
The nominal pressure corresponds to the maximum design pressure.

Maximum pressure p_{max}
The maximum pressure corresponds to the maximum operating pressure within the single operating period. The sum of the single operating periods must not exceed the total operating period.

Minimum pressure (high-pressure side)
Minimum pressure at the high pressure side (A or B) which is required in order to prevent damage to the axial piston unit.

Rate of pressure change R_A
Maximum permissible rate of pressure rise and pressure reduction during a pressure change, over the entire pressure range.

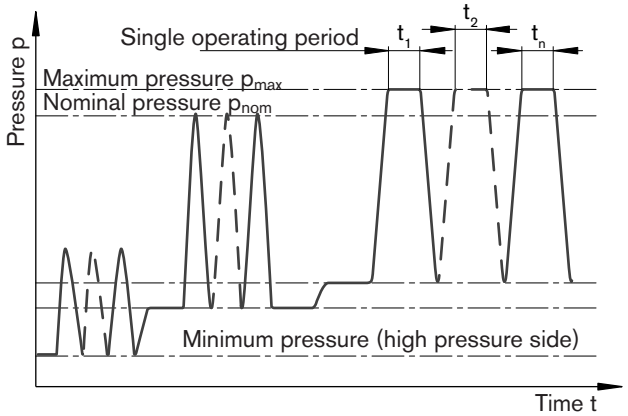

Total operating period = $t_1 + t_2 + ... + t_n$

[1)] Other values on request

[2)] Lower pressures time dependent, please consult us.

Technical data

Table of values (theoretical values, without efficiency and tolerances: valuea rounded)

Size		NG		010	011	014	016	018	023
Displacement		$V_{g\,max}$	cm^3	10.6	11.5	14.1	16.1	18	23.5
Speed [1]									
at $V_{g\,max}$		n_{nom}	rpm	5000	4200	4200	4200	4200	4900
Input flow									
at n_{nom}		$q_{v\,max}$	L/min	53	48	59	68	76	115
Power									
at n_{nom}, $\Delta p = 280$ bar		P_{max}	kW	24.7	22.5	27.6	31.6	35.3	53.6
Actual starting torque									
at n= 0 rpm, $\Delta p = 280$ bar			Nm	37.5	30	45	53	67.5	75
Torque									
at $V_{g\,max}$	$\Delta p = 280$ bar	T_{max}	Nm	47	51	63	72	80	105
Torsional stiffness	R	c	Nm/rad	–	–	–	–	14835	28478
Drive shaft	W	c	Nm/rad	–	–	–	–	–	–
	C	c	Nm/rad	15084	18662	18662	18662	18662	30017
Moment of inertia rotary group		J_{TW}	kgm^2	0.0006	0.00093	0.00093	0.00093	0.00093	0.0017
Maximum angular acceleration		α	rad/s^2	8000	6800	6800	6800	6800	5500
Case volume		V	L	0.1	0.15	0.15	0.15	0.15	0.6
Weight approx.		m	kg	5	6.5	6.5	6.5	6.5	12

Size		NG		028	037	045	058	063
Displacement		$V_{g\,max}$	cm^3	28.5	36.7	44.5	58	63.1
Speed [1]								
at $V_{g\,max}$		n_{nom}	rpm	4700	4200	4000	3600	3400
Input flow								
at n_{nom}		$q_{v\,max}$	L/min	134	154	178	209	215
Power								
at n_{nom} , $\Delta p = 280$ bar		P_{max}	kW	62.5	71.8	83.1	97.4	100.1
Actual starting torque								
at n= 0 min^{-1} , $\Delta p = 280$ bar			Nm	105	125	170	205	230
Torque								
at $V_{g\,max}$	$\Delta p = 280$ bar	T_{max}	Nm	127	163	198	258	281
Torsional stiffness	R	c	Nm/rad	28478	46859	46859	80590	80590
Drive shaft	W	c	Nm/rad	–	38489	38489	60907	60907
	C	c	Nm/rad	30017	46546	46546	87667	87667
Moment of inertia rotary group		J_{TW}	kgm^2	0.0017	0.0033	0.0033	0.0056	0.0056
Maximum angular acceleration		α	rad/s^2	5500	4000	4000	3300	3300
Case volume		V	L	0.6	0.7	0.7	0.8	0.8
Weight approx.		m	kg	12	17	17	22	22

[1] for maximum speed an outlet pressure (in low pressure side) of 18 bar is required (see diagram on page 7)

Note
Operation above the maximum values or below the minimum values may result in a loss of function, a reduced service life or in the destruction of the axial piston unit. We recommend testing the loads by means of experiment or calculation / simulation and comparison with the permissible values.

Technical data

Permissible motor speed in relation to outlet pressure

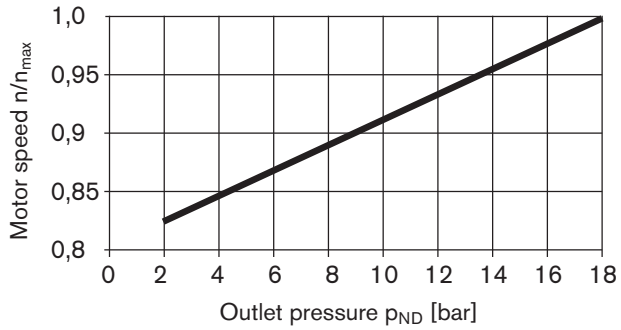

Determination of motor size (NG)

Input flow $q_v = \frac{V_g \cdot n}{1000 \cdot \eta_v}$ [L/min]

Torque $T = \frac{1{,}59 \cdot V_g \cdot \Delta p \cdot \eta_{mh}}{100}$ [Nm]

or $T = T_k \cdot \Delta p \cdot \eta_{mh}$

Power $P = \frac{2\,\pi \cdot T \cdot n}{60000} = \frac{q_v \cdot \Delta p \cdot \eta_t}{600}$ [kW]

Output speed $n = \frac{q_v \cdot 1000 \cdot \eta_v}{V_g}$ [rpm]

V_g = Displacement per revolution in cm³
Δp = Differential pressure in bar
n = Speed in rpm
η_v = Volumetric efficiency
η_{mh} = Mechanical-hydraulic efficiency
η_t = Overall efficiency ($\eta_t = \eta_v \cdot \eta_{mh}$)
T_k = Torque constant

Permissible radial and axial forces on the drive shaft

Size			NG		10	11	14	16	18	23
Max. radial force at X/2	Drive shaft R; W 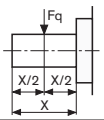	Drive shaft C 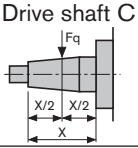	$F_{q\,max}$	N	250	350	350	350	350	1200
Maximum axial force	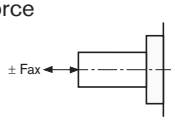		$\pm F_{ax\,max}$	N	400	700	700	700	700	1000

Size			NG		28	37	45	58	63
Max. radial force at X/2	Drive shaft R; W 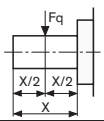	Drive shafte C 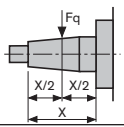	$F_{q\,max}$	N	1200	1500	1500	1700	1700
Maximum axial force	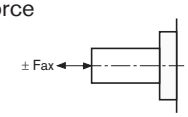		$\pm F_{ax\,max}$	N	1000	1500	1500	2000	2000

Dimensions A10FM size 23 - 28

Before finalising your design request a certified installation drawing. Dimensions in mm.

A10FM 23-28/52W-VxCxxN000

Port plate 10

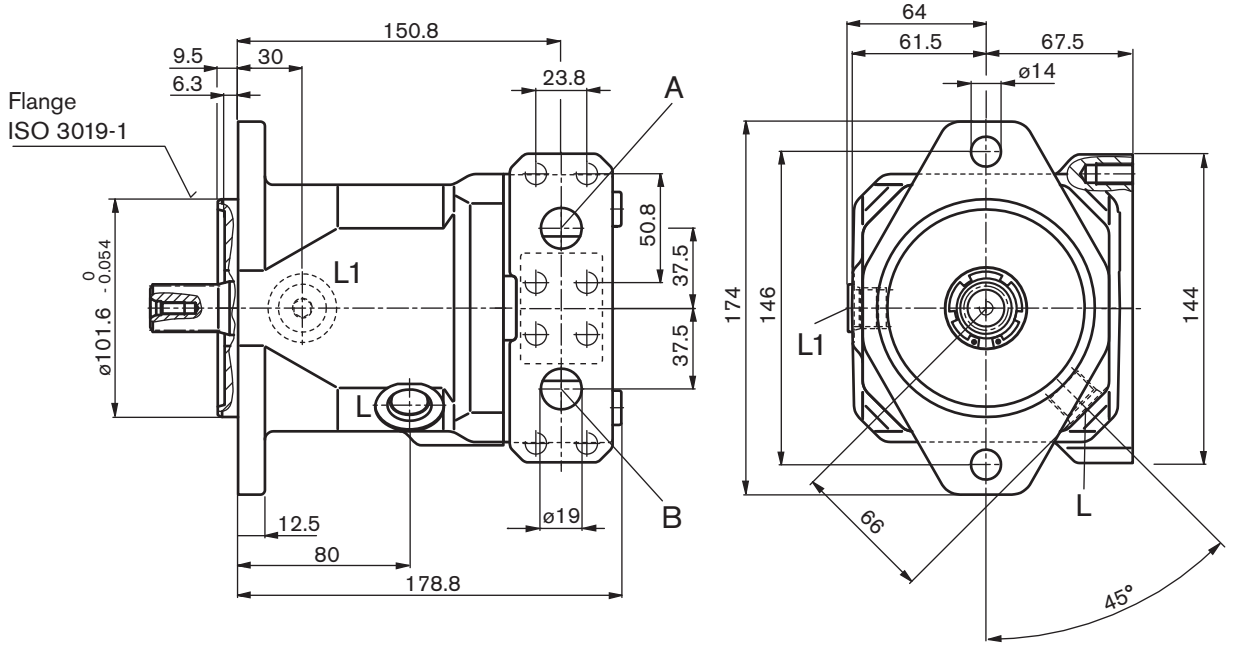

Port plate 16

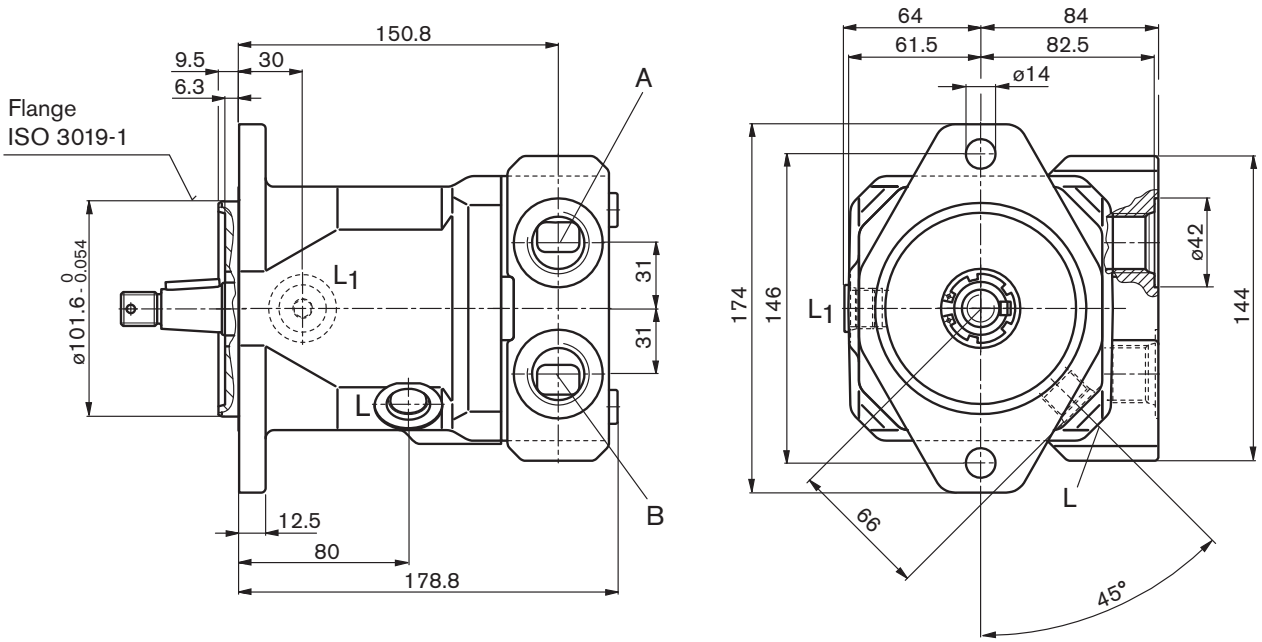

Dimensions A10FM size 23 - 28

Before finalising your design request a certified installation drawing. Maße in mm.

Drive shafts

R Splined shaft 7/8 in 13T 16/32DP[1] (SAE J744; 22-4(B))

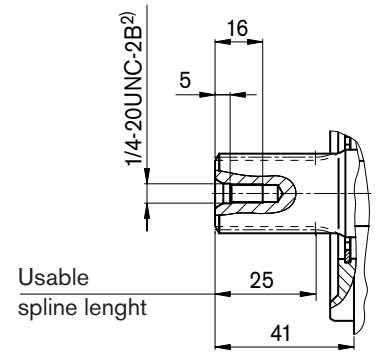

C Tapered with woodruff key and threaded end (SAE J744; 22-3(B))

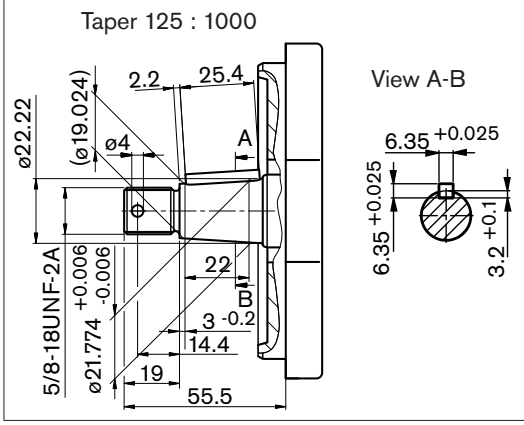

Ports

Designation	Port for	Standard	Size[2]	Max. pressure [bar][3]	State
A, B	Service line (high pressure series)	SAE J518	3/4 in	350	O
Port plate 10	Mounting bolts	DIN 13	M10 x 1.5; 17 deep		
A, B Port plate 16	Service line	DIN 3852	M27 x 2; 16 deep	350	O
L	Case drain	ISO 11926[5]	3/4-16 UNF-2B; 11 deep	4	O[4]
L_1	Case drain	ISO 11926[5]	3/4-16 UNF-2B; 11 deep	4	X[4]

[1] ANSI B92.1a-1996, 30° pressure angle, flat base, flank centering, tolerance class 5
[2] Observe the general instructions on page 28 for the maximum tightening torques.
[3] Momentary pressure spikes may occur depending on the application. Keep this in mind when selecting measuring devices and fittings.
[4] Depending on the installation position, L or L_1 must be connected (see also page 26 - 27).
[5] The counterbore can be deeper than stipulated in the standard.
O = Must be connected (plugged on delivery)
X = Plugged (in normal operation)

Dimensions A10FM size 37 - 45

Before finalising your design request a certified installation drawing. Dimensions in mm.

A10FM 37-45/52W-VxCxxN000

Port plate 10

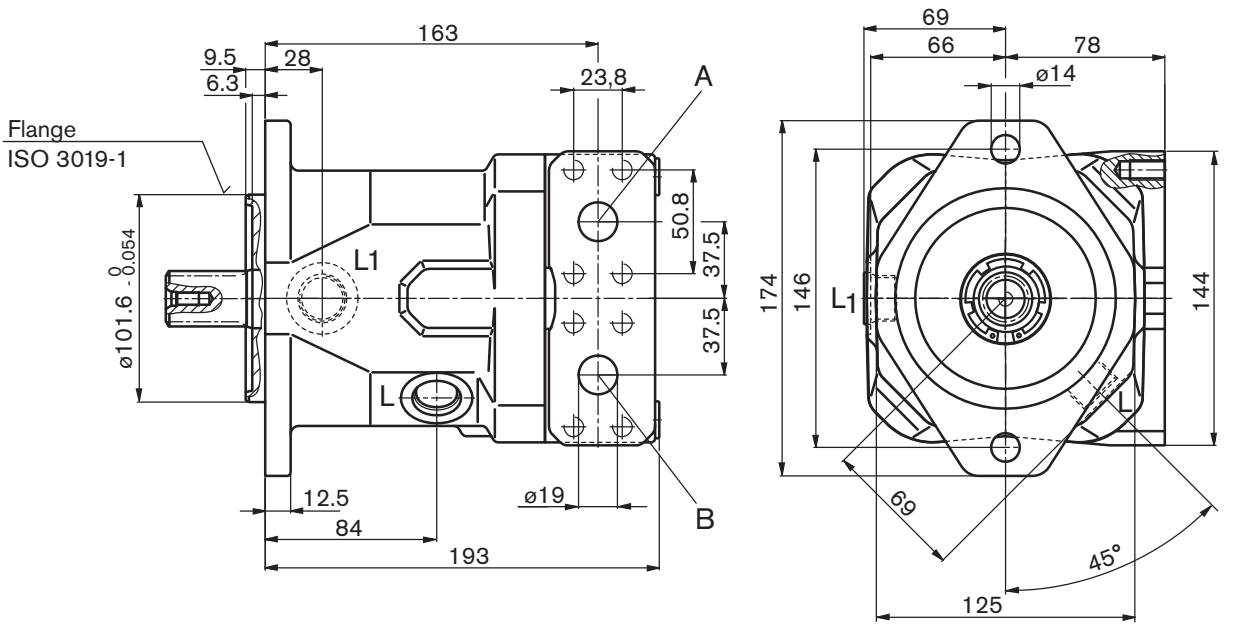

Port plate16

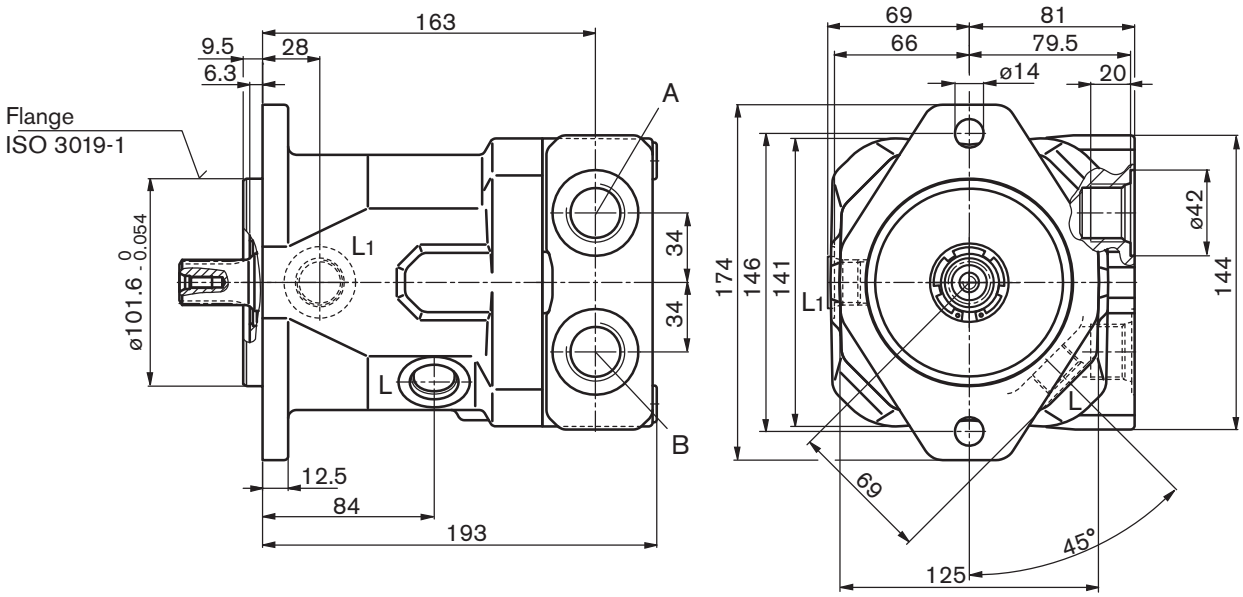

Dimensions A10FM size 37 - 45

Before finalising your design request a certified installation drawing. Dimensions in mm.

Drive shafts

R Splined shaft 1 in 15T 16/32DP[1] (SAE J744; 25-4(B-B))

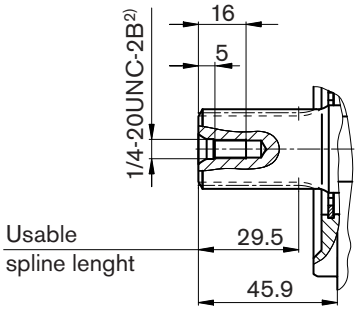

W Splined shaft 7/8 in 13T 16/32DP[1] (SAE J744; 22-4(B))

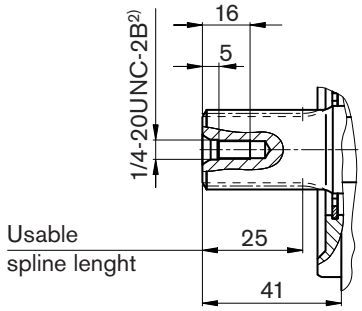

C Tapered with woodruff key and threaded end (SAE J744; 22-3(B))

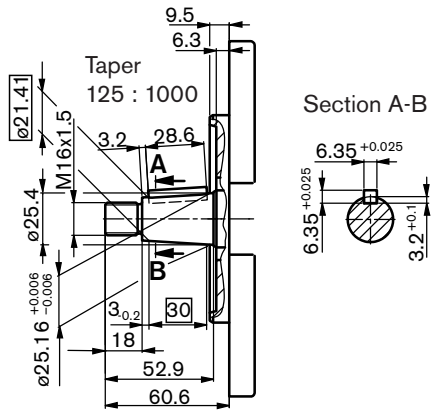

Ports

Designation	Port for	Standard	Size[2]	Max. pressure [bar][3]	State
A, B	Service line (high pressure series)	SAE J518	3/4 in	350	O
Port plate 10	Mounting bolts	DIN 13	M10 x 1.5; 17 deep		
A, B Port plate 16	Service line	DIN 3852-1	M27 x 2; 16 deep	350	O
L	Case drain	ISO 11926[5]	7/8-14 UNF-2B; 13 deep	4	O[4]
L_1	Case drain	ISO 11926[5]	7/8-14 UNF-2B; 13 deep	4	X[4]

[1] ANSI B92.1a-1996, 30° pressure angle, flat base, flank centering, tolerance class 5
[2] Observe the general instructions on page 28 for the maximum tightening torques.
[3] Momentary pressure spikes may occur depending on the application. Keep this in mind when selecting measuring devices and fittings.
[4] Depending on the installation position, L or L_1 must be connected (see also page 26 - 27).
[5] The counterbore can be deeper than stipulated in the standard.
O = Must be connected (plugged on delivery)
X = Plugged (in normal operation)

Dimensions A10FM size 58 - 63

Before finalising your design request a certified installation drawing. Dimensions in mm.

A10FM 58-63/52W-VxCxxN000

Port plate 10

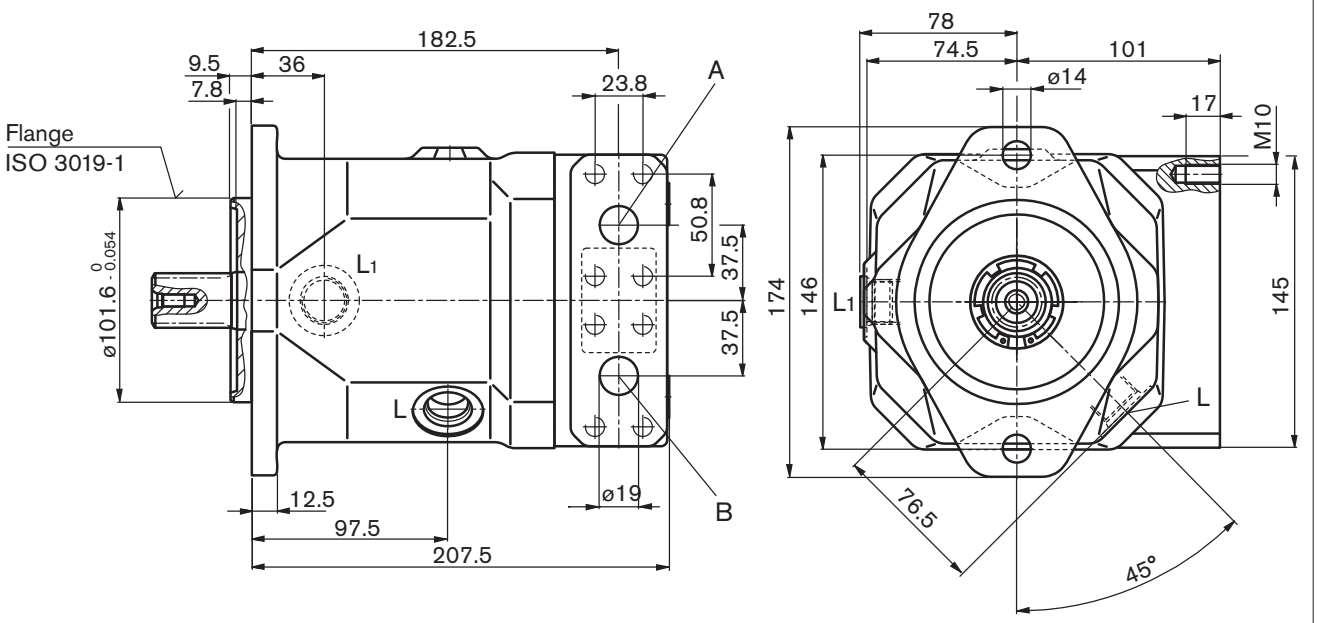

Port plate 16

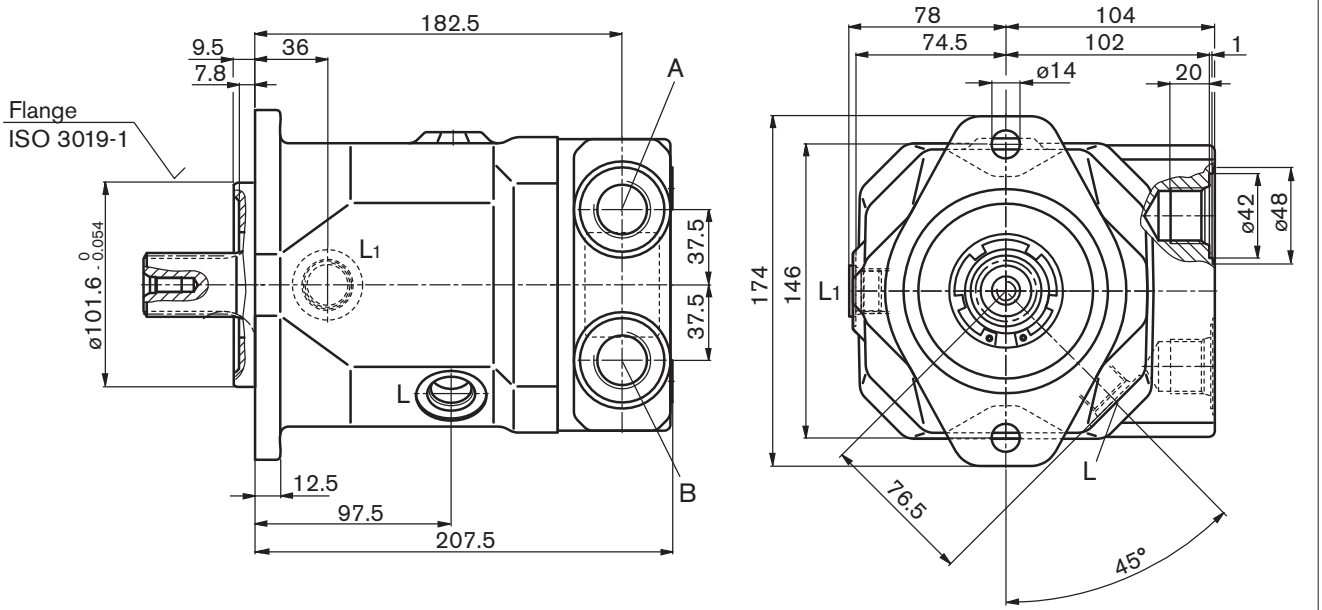

Dimensions A10FM size 58 - 63

Before finalising your design request a certified installation drawing. Dimensions in mm

Drive shafts

R Drive shaft 1 1/4 in 14T 12/24DP[1] (SAE J744; 32-4(C))

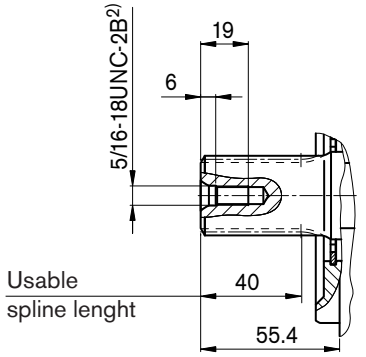

W Drive shaft 1 in 15T 16/32DP[1] (SAE J744; 25-4(B-B))

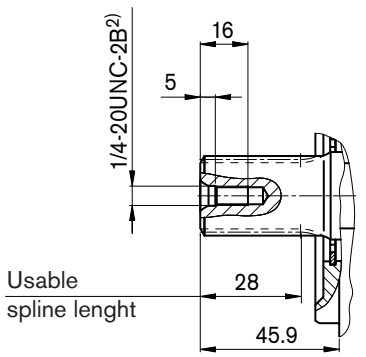

C Tapered with woodruff key and threaded end (SAE J744; 32-3(C))

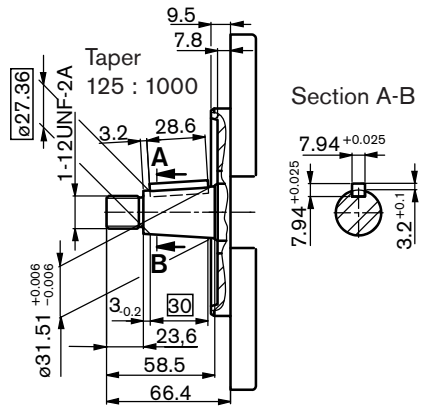

Ports

Designation	Port for	Standard	Size[2]	Max. press. [bar][3]	State
A, B	Service line (high pressure series)	SAE J518	3/4 in	350	O
Port plate 10	Mounting bolts	DIN 13	M10 x 1.5; 17deep		
A, B Port plate 16	Service line	DIN 3852-1	M27 x 2; 16 deep	350	O
L	Case drain	ISO 11926[5]	7/8-14 UNF-2B; 13 deep	4	O[4]
L_1	Case drain	ISO 11926[5]	7/8-14 UNF-2B; 13 deep	4	X[4]

[1] ANSI B92.1a-1996, 30° pressure angle, flat base, flank centering, tolerance class 5
[2] Observe the general instructions on page 28 for the maximum tightening torques.
[3] Momentary pressure spikes may occur depending on the application. Keep this in mind when selecting measuring devices and fittings.
[4] Depending on the installation position, L or L_1 must be connected (see also page 26 - 27).
[5] The counterbore can be deeper than stipulated in the standard.
O = Must be connected (plugged on delivery)
X = Plugged (in normal operation)

Dimensions A10FE size 10

Before finalising your design request a certified installation drawing. Dimensions in mm

A10FE 10/52W-VxC16N000

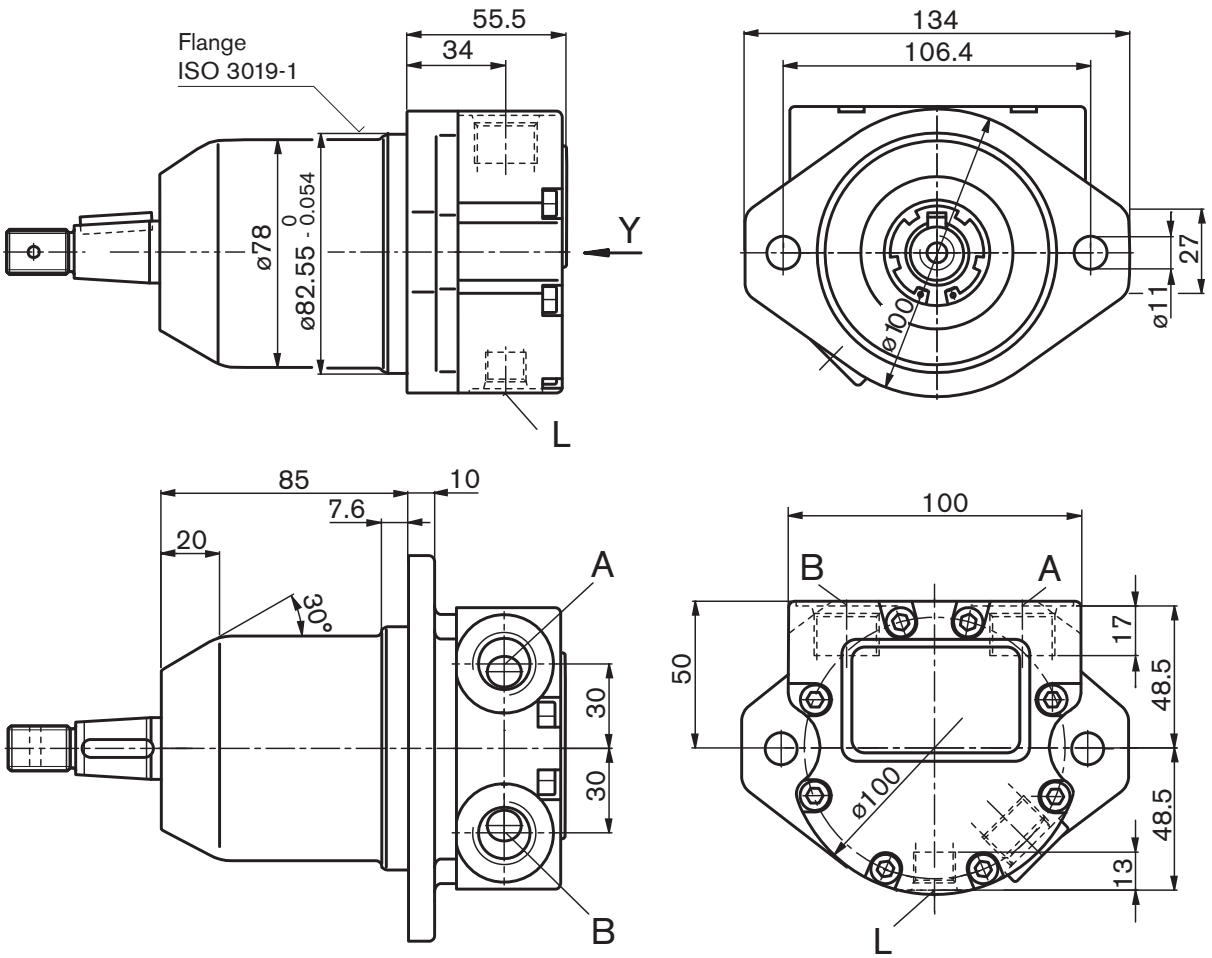

Dimensions A10FE size 10

Before finalising your design request a certified installation drawing. Dimensions in mm.

Drive shaft

C Tapered shaft with woodruff key and threaded end (SAE J744; 22-3(B))

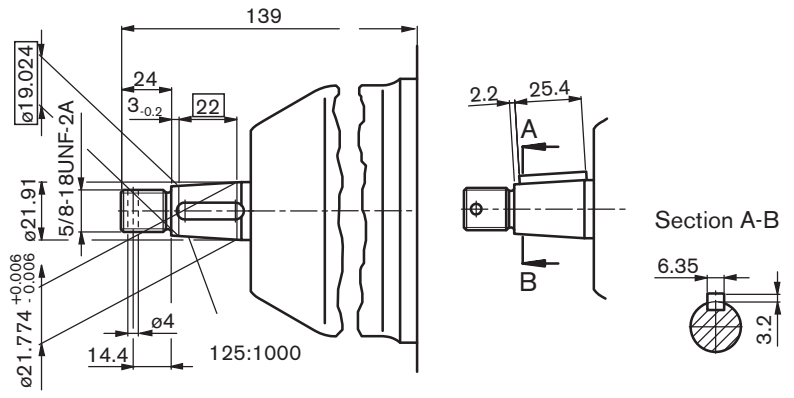

Ports

Designation	Port for	Standard	Size[2]	Max. pressure [bar][3]	State
A, B	Service line	DIN 3852-1	M18 x 1.5; 17 deep	350	O
L	Case drain	DIN 3852-1	M14 x 1.5; 13 deep	4	O[4]

[1] ANSI B92.1a-1996, 30° pressure angle, flat base, flank centering, tolerance class 5

[2] Observe the general instructions on page 28 for the maximum tightening torques.

[3] Momentary pressure spikes may occur depending on the application. Keep this in mind when selecting measuring devices and fittings.

[4] Depending on the installation position, L or L_1 must be connected (see also page 26 - 27).

O = Must be connected (plugged on delivery)

X = Plugged (in normal operation)

Dimensions A10FE size 11 - 18

Before finalising your design request a certified installation drawing. Dimensions in mm.

A10FE 11-18/52W-Vxx16N000

Mounting flange H
Special flange

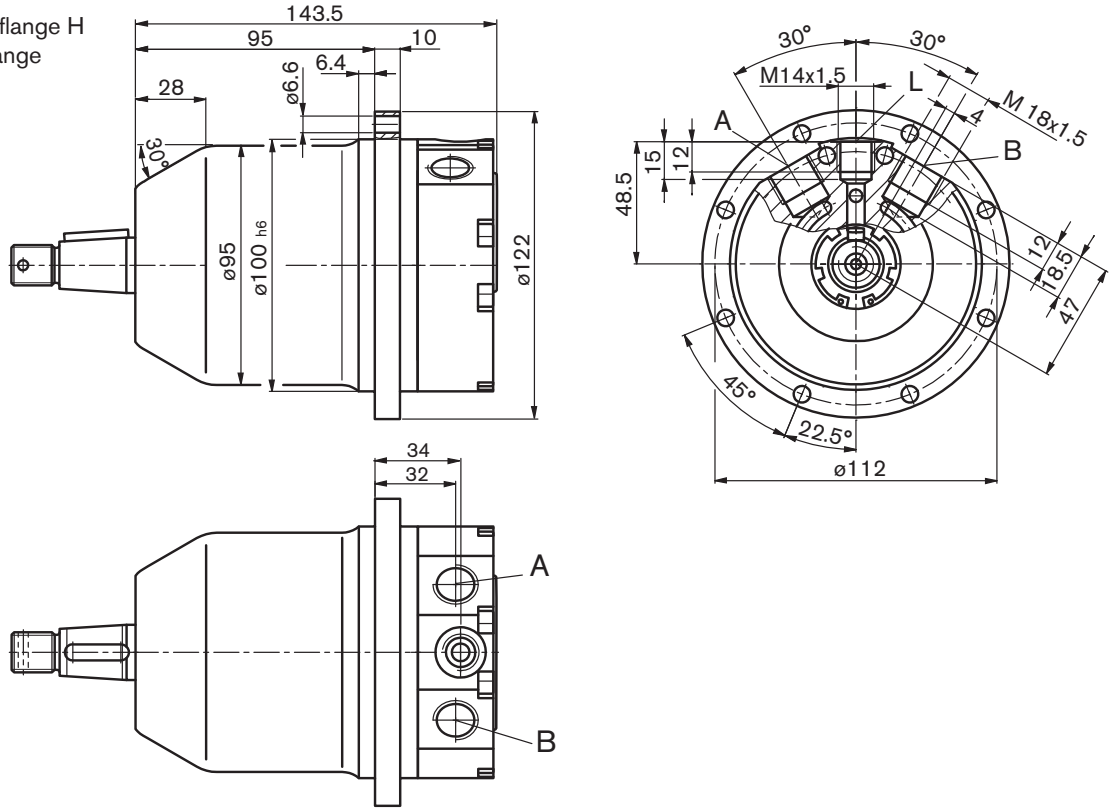

Mounting flange C
flange to
ISO 3019-1

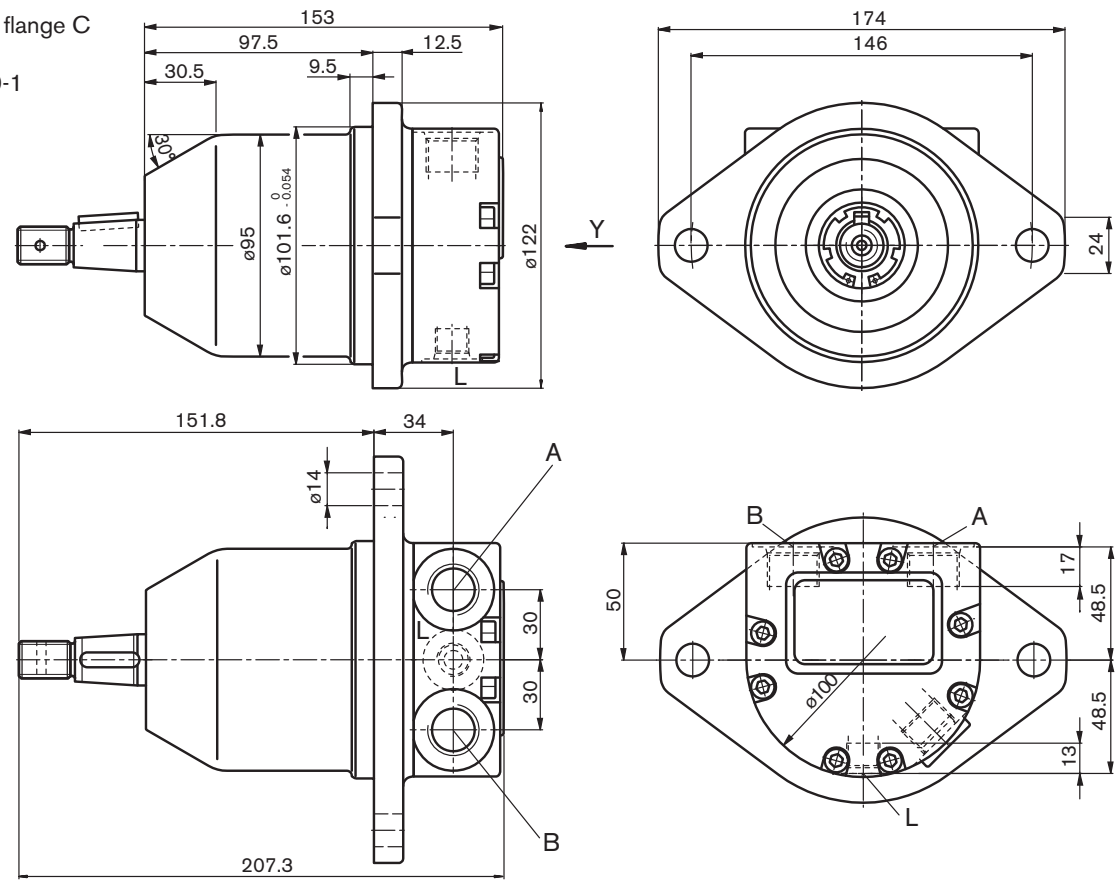

Dimensions A10FE size 11 - 18

Before finalising your design request a certified installation drawing. Dimensions in mm

Drive shafts

R[5] Splined shaft 3/4 in 11T 16/32DP[1] (SAE J744; 19-4(A-B))

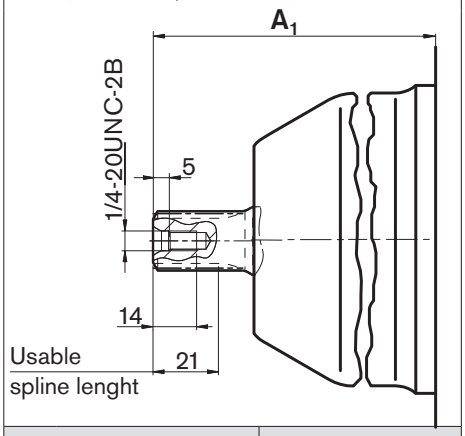

Mounting flange	A_1
H	126,6
C	–

C Tapered with woodruff key and threaded end (SAE J744; 22-3(B))

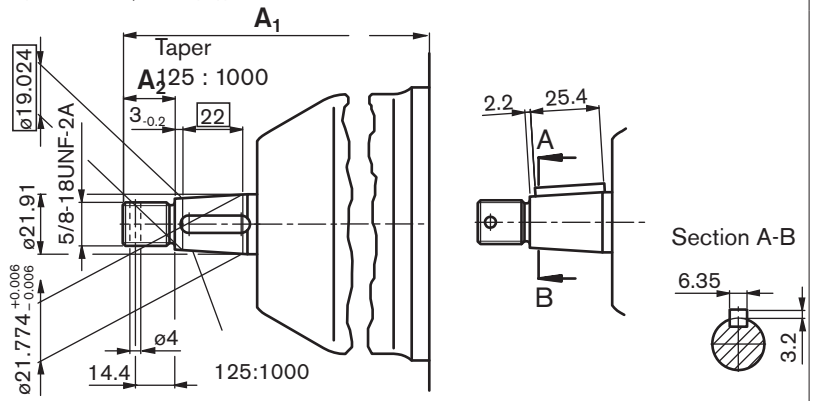

Mounting flange	A_1	A_2
H	**144.2**	**19**
C	**151.8**	**24**

Ports

Designation	Port for	Standard	Size[2]	Max. pressure [bar][3]	State
A, B	Service line	DIN 3852-1	M18 x 1.5; 12 deep	350	O
L	Case drain	DIN 3852-1	M14 x 1.5; 12 deep	4	O[4]
L_1	Case drain	DIN 3852-1	M14 x 1.5; 12 deep	4	X[4]

[1] ANSI B92.1a-1996, 30° pressure angle, flat base, flank centering, tolerance class 5
[2] Observe the general instructions on page 28 for the maximum tightening torques.
[3] Momentary pressure spikes may occur depending on the application. Keep this in mind when selecting measuring devices and fittings.
[4] Depending on the installation position, L or L_1 must be connected (see also page 26 - 27).
[5] R-shaft with C-flange for size 10 resp. 11 to 18 in preparation.
O = Must be connected (plugged on delivery)
X = Plugged (in normal operation)

Dimensions A10FE size 23 - 28

Before finalising your design request a certified installation drawing. Dimensions in mm

A10FE 23-28/52W-VxFxxN000

Port plate 10

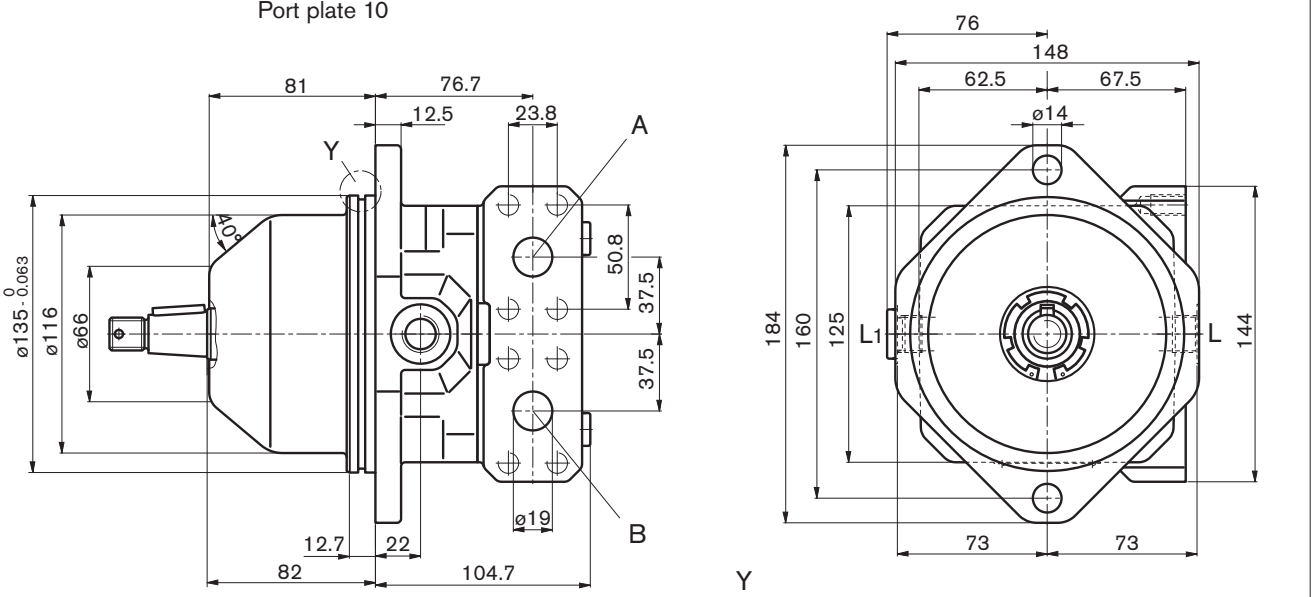

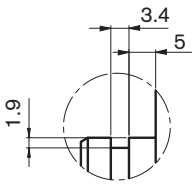

Port plate 16

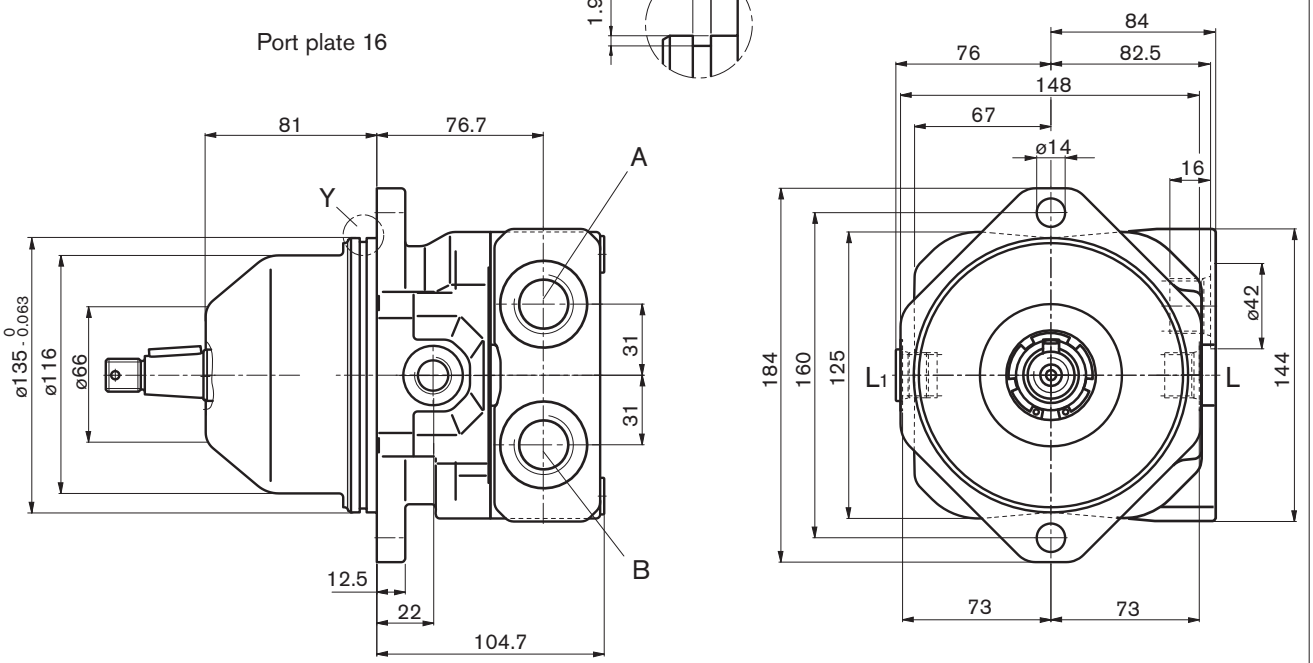

Dimensions A10FE size 23 - 28

Before finalising your design request a certified installation drawing. Dimensions in mm

Drive shafts

R Drive shaft 7/8 in 13T 16/32DP[1)]
(SAE J744; 22-4(B))

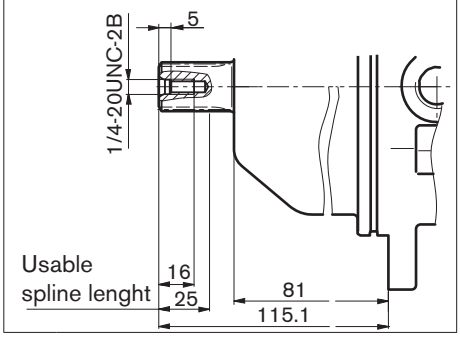

C Tapered with woodruff key and threaded end
(SAE J744; 22-3(B))

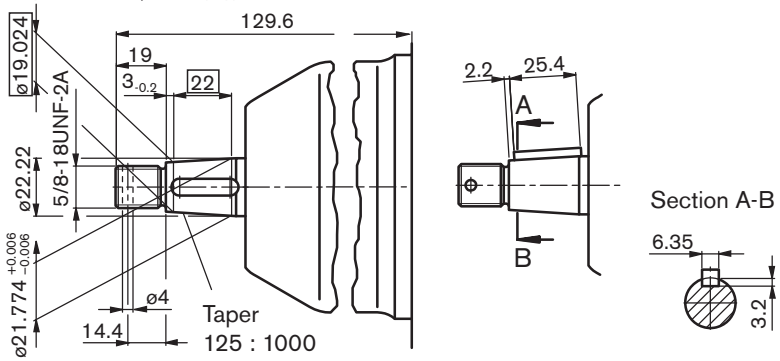

Ports

Designation	Port for	Standard	Size[2)]	Max. pressure [bar][3)]	State
A, B	Service line (high pressure series)	SAE J518	3/4 in	350	O
Port plate 10	Mounting bolts	DIN 13	M10 x 1.5; 17 deep		
A, B Port plate 16	Service line	DIN 3852-1	M27 x 2; 16 deep	350	O
L	Case drain	ISO 11926[5)]	3/4-16 UNF-2B; 11 deep	4	O[4)]
L_1	Case drain	ISO 11926[5)]	3/4-16 UNF-2B; 11 deep	4	X[4)]

[1)] ANSI B92.1a-1996, 30° pressure angle, flat base, flank centering, tolerance class 5
[2)] Observe the general instructions on page 28 for the maximum tightening torques.
[3)] Momentary pressure spikes may occur depending on the application. Keep this in mind when selecting measuring devices and fittings.
[4)] Depending on the installation position, L or L_1 must be connected (see also page 26 - 27).
[5)] The counterbore can be deeper than stipulated in the standard.
O = Must be connected (plugged on delivery)
X = Plugged (in normal operation)

Dimensions A10FE size 37 - 45

Before finalising your design request a certified installation drawing. Dimensions in mm

A10FE 37-45/52W-VxFxxN000

Port plate 10

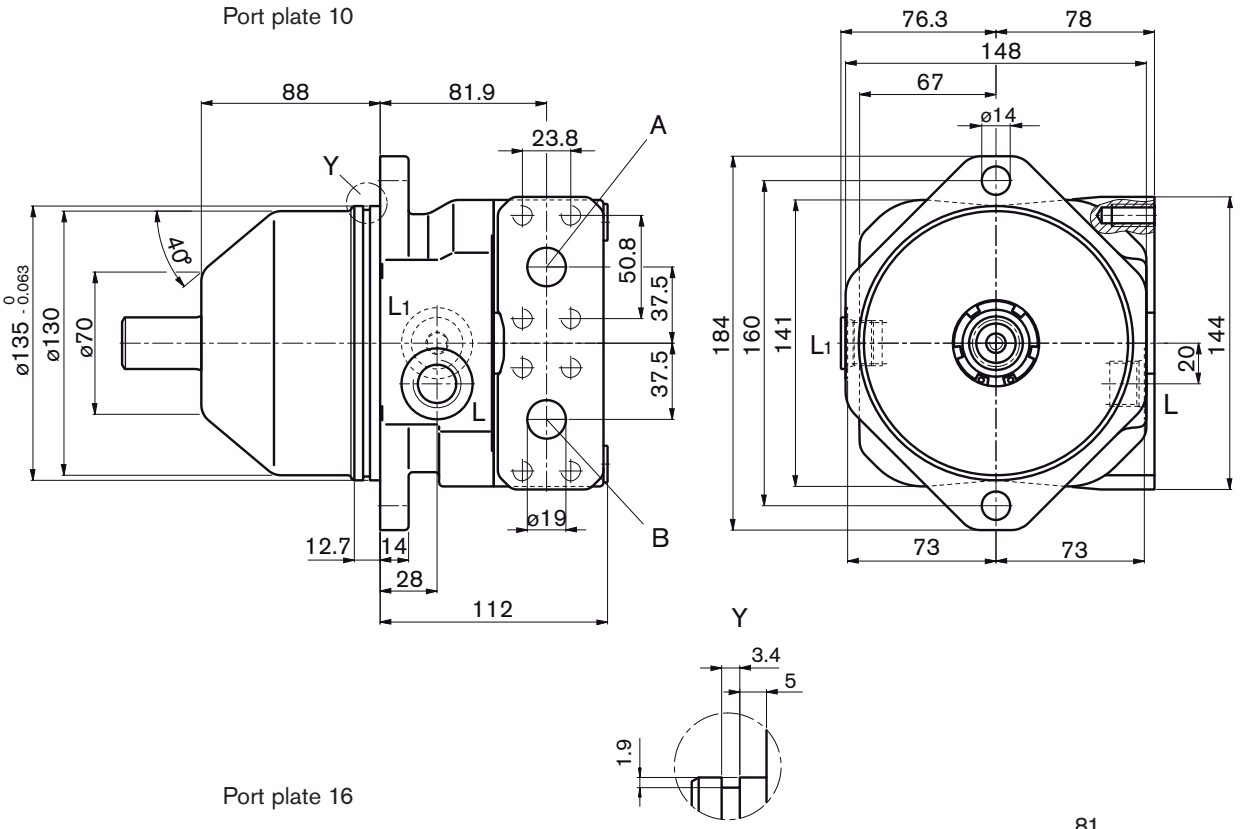

Port plate 16

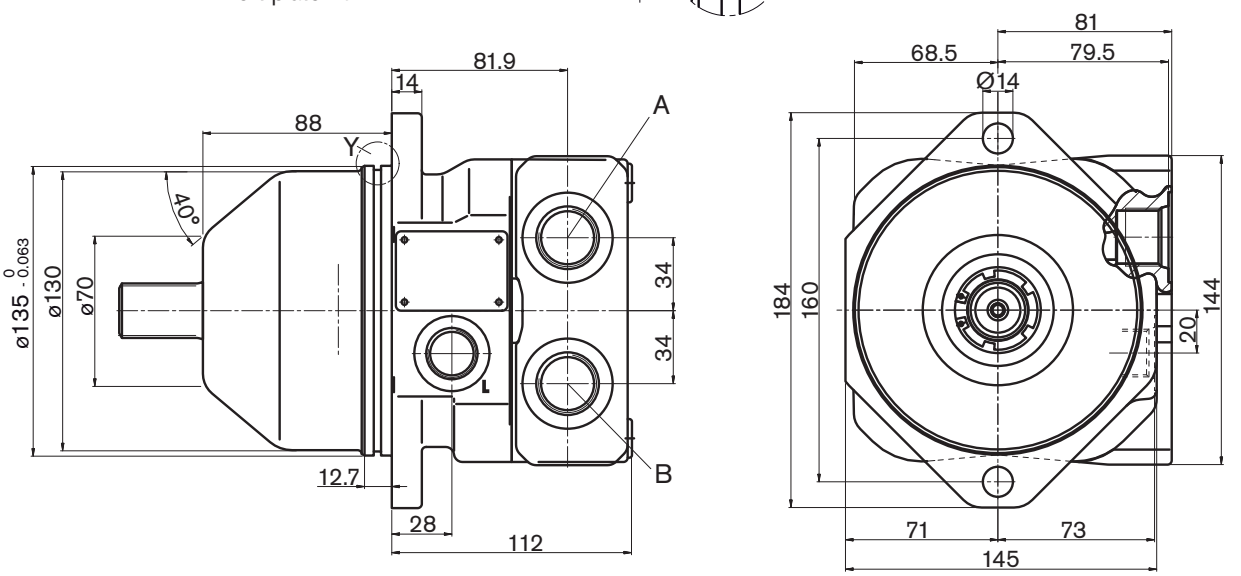

Dimensions A10FE size 37 - 45

Before finalising your design request a certified installation drawing. Dimensions in mm.

Drive shafts

R Splined shaft 1 in 15T 16/32DP[1)]
(SAE J744; 25-4(B-B))

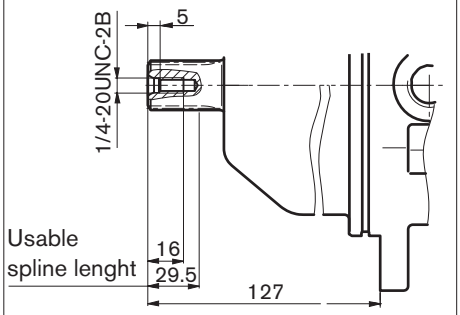

C Tapered with woodruff key and threaded end
(SAE J744; 25-3(B-B))

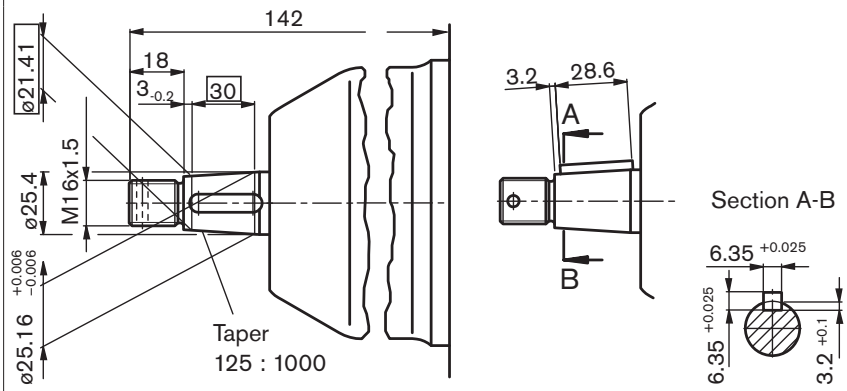

W Splined shaft 7/8 in 13T 16/32DP[1)]
(SAE J744; 22-4(B))

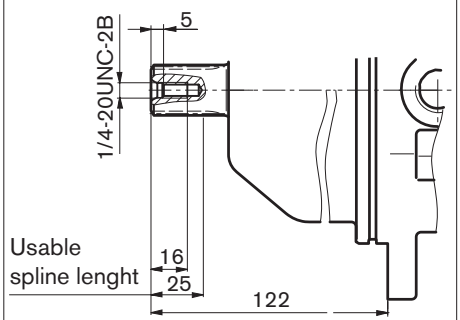

Ports

Designation	Port for	Standard	Size[2)]	Max. pressure [bar][3)]	State
A, B	Service line (high pressure range)	SAE J518	3/4 in	350	O
Port plate 10	Mounting bolts	DIN 13	M10 x 1.5; 17 deep		
A, B Port plate 16	Service line	DIN 3852-1	M27 x 2; 16 deep	350	O
L	Case drain	ISO 11926[5)]	7/8-14 UNF-2B; 13 deep	4	O[4)]
L_1	Case drain	ISO 11926[5)]	7/8-14 UNF-2B; 13 deep	4	X[4)]

[1)] ANSI B92.1a-1996, 30° pressure angle, flat base, flank centering, tolerance class 5
[2)] Observe the general instructions on page 28 for the maximum tightening torques.
[3)] Momentary pressure spikes may occur depending on the application. Keep this in mind when selecting measuring devices and fittings.
[4)] Depending on the installation position, L or L_1 must be connected (see also page 26 - 27).
[5)] The counterbore can be deeper than stipulated in the standard.
O = Must be connected (plugged on delivery)
X = Plugged (in normal operation)

Dimensions A10FE size 58 - 63

Before finalising your design request a certified installation drawing. Dimensions in mm.

A10FE 58-63/52W-VxFxxN000

Port plate 10

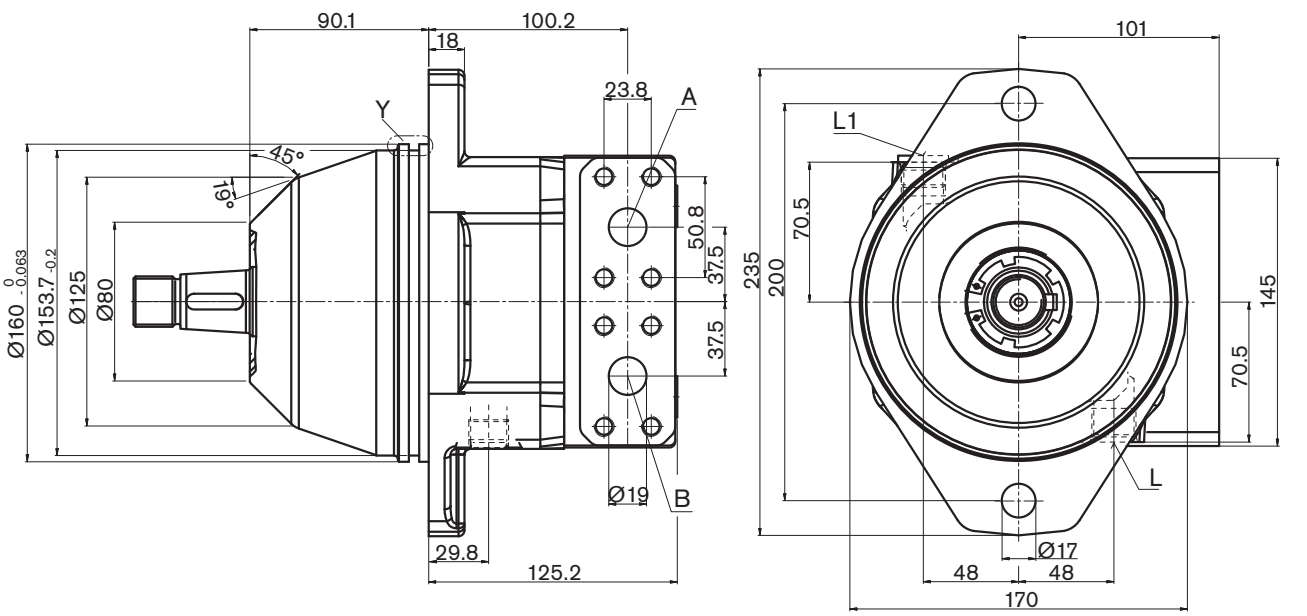

View Y 2:1

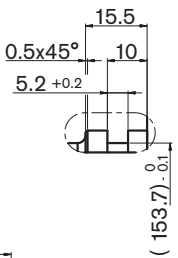

Port plate 16

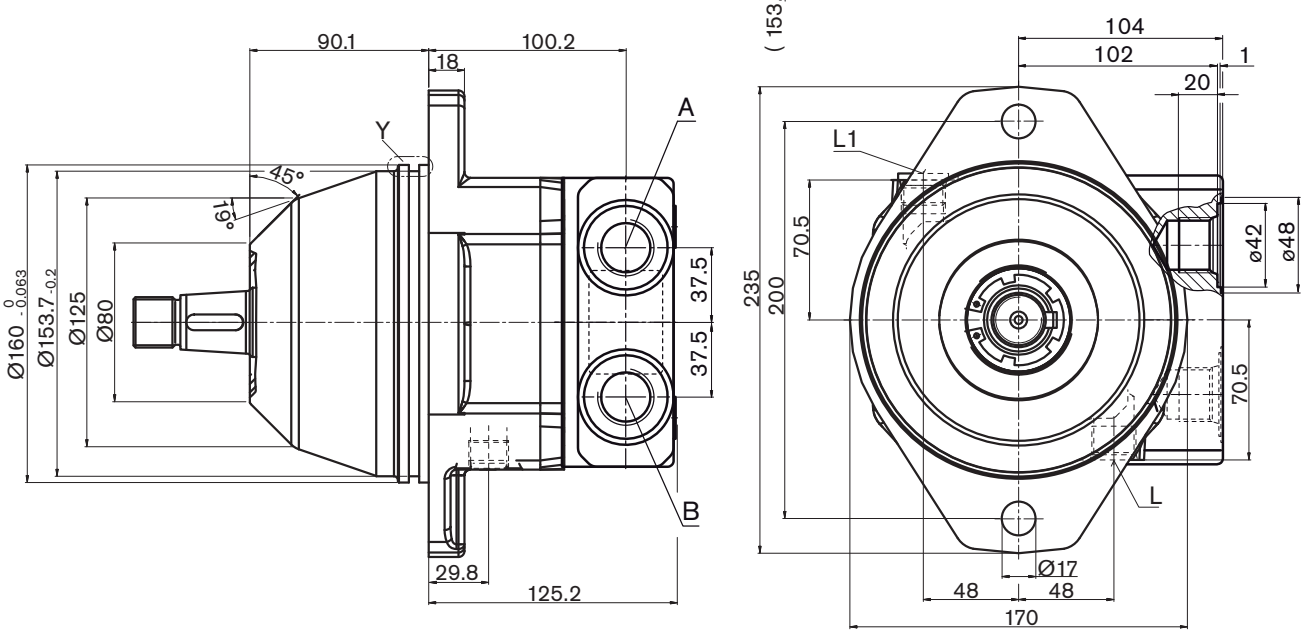

Dimensions A10FE size 58 - 63

Before finalising your design request a certified installation drawing. Dimensions in mm.

Drive shafts

R Splined shaft 1 1/4 in 14T 12/24DP[1)]
(SAE J744; 32-4(C))

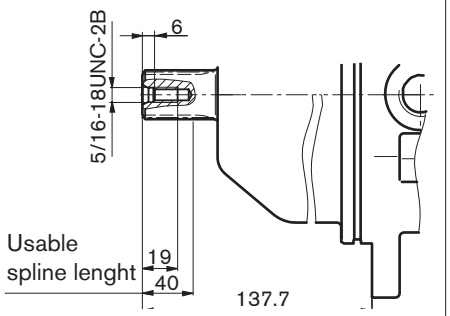

C Tapered with woodruff key and threaded end
(SAE J744; 32-3(C))

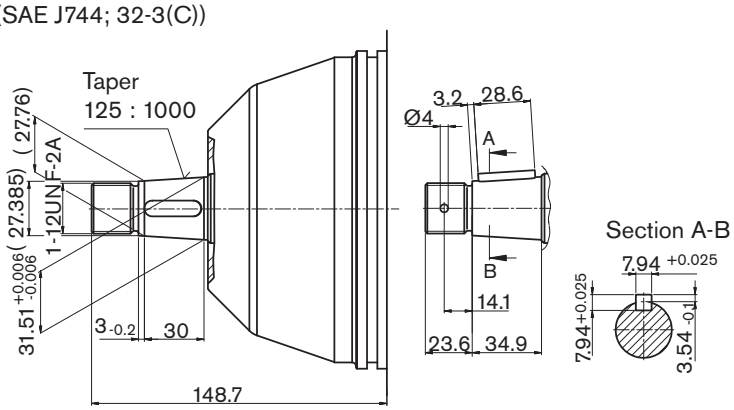

W Splined shaft 1 in 15T 16/32DP[1)]
(SAE J744; 25-4(B-B))

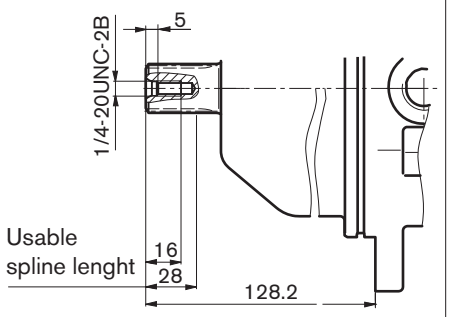

Ports

Designation	Port for	Standard	Size[2)]	Max. pressure [bar][3)]	State
A, B	Service line (high pressure range)	SAE J518	3/4 in	350	O
Port plate 10	Mounting bolts	DIN 13	M10 x 1.5; 17 deep		
A, B Port plate 16	Service line	DIN 3852-1	M27 x 2; 16 deep	350	O
L	Case drain	ISO 11926[5)]	7/8-14 UNF-2B; 13 deep	4	O[4)]
L_1	Case drain	ISO 11926[5)]	7/8-14 UNF-2B; 13 deep	4	X[4)]

[1)] ANSI B92.1a-1996, 30° pressure angle, flat base, flank centering, tolerance class 5
[2)] Observe the general instructions on page 28 for the maximum tightening torques.
[3)] Momentary pressure spikes may occur depending on the application. Keep this in mind when selecting measuring devices and fittings.
[4)] Depending on the installation position, L or L_1 must be connected (see also page 26 - 27).
[5)] The counterbore can be deeper than stipulated in the standard.
O = Must be connected (plugged on delivery)
X = Plugged (in normal operation)

Flushing and boost pressure valve

Before finalising your design request a certified installation drawing. Dimensions in mm.

Ordering Option N007

This valve assembly is used to flush an unacceptable heat load out of the closed loop circuit, and to maintain the necessary minimum boost pressure (16 bar, fixed setting). The valve is integrated into the port plate.

A built-in fixed orifice determines the flushing flow, which is taken out of the low pressure side of the loop and directed into the motor housing. It leaves the housing together with the case drain flow. This combined flow is replenished with fresh oil by means of the boost pump.

Dimensions A10FM / A10FE

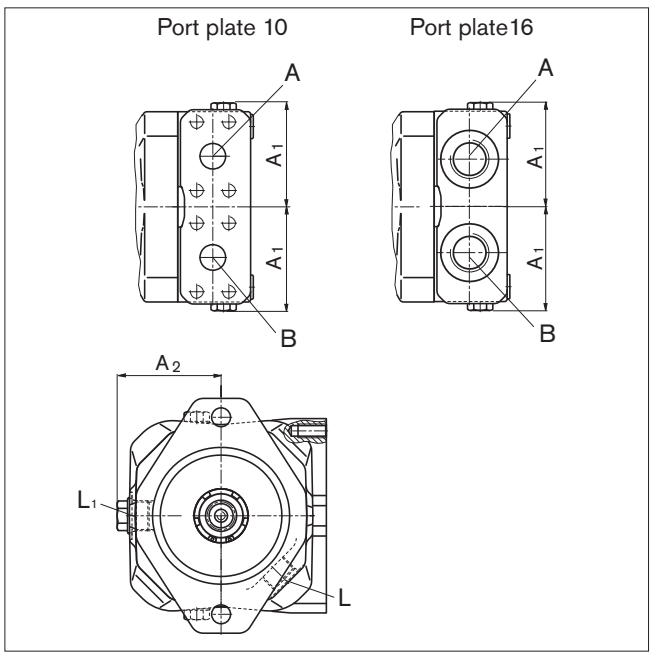

Standard flushing flow

With low press. side p_{ND} = 20 bar and an orifice dia. 1,6 mm: 5,5 L/min (sizes 23 - 63). Other orifice diameters are available, please state in clear text.

Further flushing flows for sizes 23 - 63 see table:

Flushing flow [L/min]	Orifice ø [mm]
3.5	1.2
5.5	1.6
9	2

Schematic

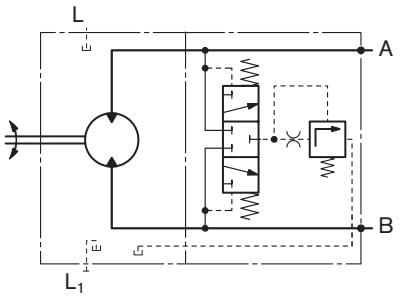

	Port for
A; B	Service line
L, L_1	Case drain (L_1 plugged)

Size (NG)	A_1	A_2
23/28	72	72
37/45	77	77
58/63	77	82

Anti cavitation valve

Ordering option N002

When stopping a system with a relatively large mass (i.e. fan drive) the anti-cavitation valve provides fluid to the motor inlet during the coasting time.

The valve assembly is integrated inside the port plate.

Important

It is necessary **to specify a direction of rotation (clockwise or counter clockwise)** looking at the shaft end of the motor.

The outside dimensions are identical to the standard units except the A10FE 11 - 18 with the 8-hole mounting flange, for the difference in lenght see unit dimensions.

Schematic

Clockwise rotation

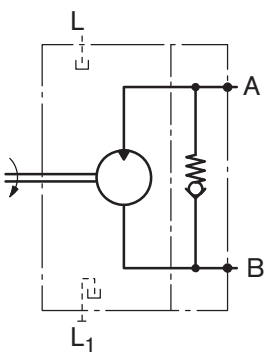

Counter clockwise rotation

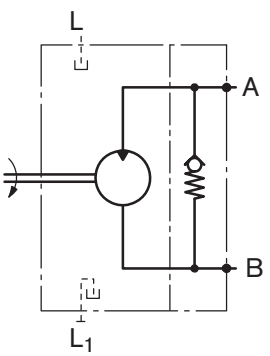

	Port for
A; B	Service line
L, L_1	Case drain (L_1 plugged)

Speed sensor

Ordering option D

The version A10FM...D comprises gearing around the rotary unit (prepared for speed pickup).

In this case, the rotating cylinder barrel can provide a speed dependent signal, which can be picked up by a suitable sensor and processed for further evaluation. Sensor port (D) will be closed for delivery.

A motor, prepared for speed sensing will be delivered without the necessary accessory parts which must be ordered separately.

Inductive speed sensor ID R 18/20-L250 (see RE 95130) and mounting parts (spacer and 2 seals per kit) can be ordered separately with the following part numbers:

Size (NG)	Ordering Nr.	Nr. of teeth
23/28	R902428802	48
37/45	R902433368	48
58/63	in preparation	9

Schematic

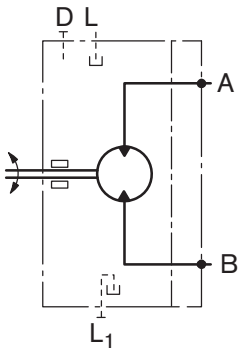

	Port for
A; B	Service line
L, L_1	Case drain (L_1 plugged)

Dimensions

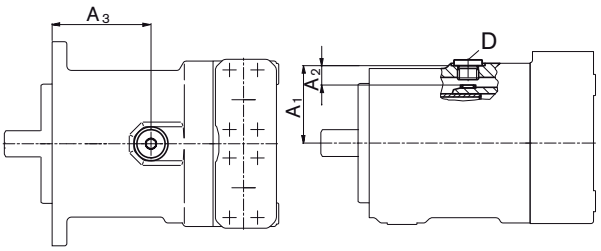

A10FM....D

Size (NG)	A1	A2	A3	Port „D“ (plugged)
23/28	61	15.5	101.8	M18 x 1.5
37/45	66	17	84.2	M18 x 1.5
58/63	69	14.8	128.5	M18 x 1.5

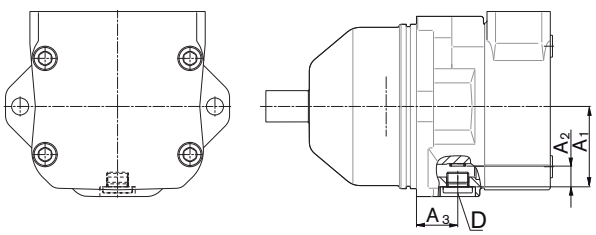

A10FE.....D

Size (NG)	A1	A2	A3	Port „D“ (plugged)
23/28	61	15.5	27.7	M18 x 1.5
37/45	66	17	33.9	M18 x 1.5
58/63	69	14.8	46.1	M18 x 1.5

Installation instructions

General

At all times, the axial piston unit must be filled with fluid and air bled during commissioning and operation. This must also be observed after a prolonged period of standstill as the system may drain back to the reservoir via the hydraulic lines.

The case drain fluid in the motor housing must be directed to tank via the highest available tank port and must drain the fluid below the minimum fluid level in the reservoir.

Installation position

See following examples 1 to 8.
Recommended installation positions: 1 and 3 resp. 2 and 4.
Additional installation positions are available on request.

Below reservoir installation (standard)

Below reservoir installation means, that the motor is mounted below the minimum fluid level.

Above reservoir installation

Above reservoir installation means, that the motor is mounted above the minimum fluid level. A check valve in the case drain line is only permissible under certain conditions; please consult us.

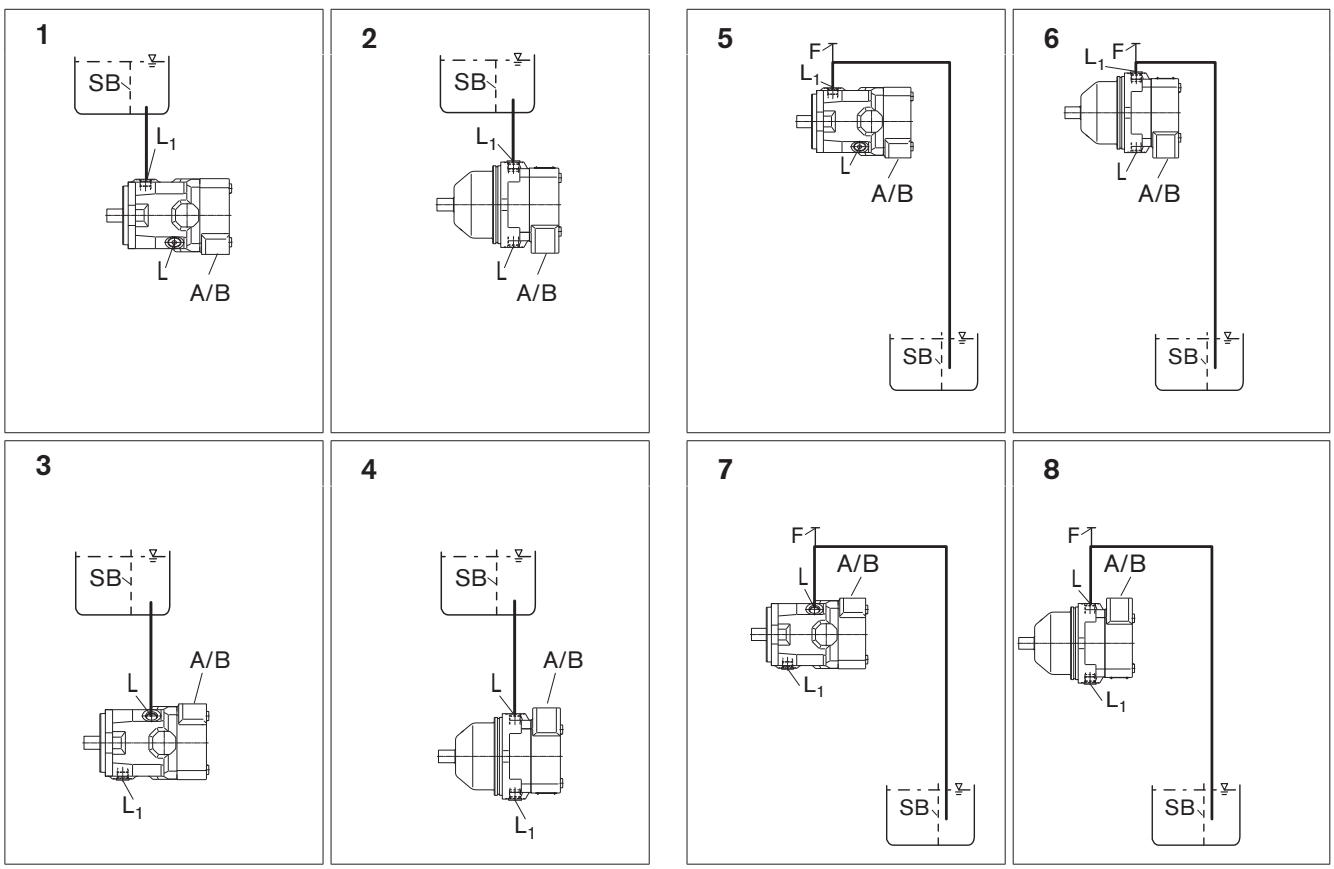

Install. position	Air bleed	Filling
1, 2	–	L_1
3, 4	–	L

Install. position	Air bleed	Filling
5, 6	F	L_1 (F)
7, 8	F	L (F)

L/L_1 = Case drain port, F = Air bleed resp. filling port, , SB = Baffle.

Notes

General instructions

– The motor A10FM and A10FE has been designed to be used in open and closed circuits.

– Project planning, assembly and commissioning of the axial piston unit require the involvement of qualified personnel.

– Before operating the axial piston unit read the relevant operating manual thoroughly and completely. If needed request this information from Rexroth

– During and shortly after operation, there is a risk of burns on the axial piston unit and especially on the solenoids. Take appropriate safety measures (e.g. by wearing protective clothing).

- Pressure ports:
  The ports and fastening threads are designed for the specified maximum pressure. The machine or system manufacturer must ensure that the connecting elements and lines correspond to the specified operating conditions (pressure, flow, hydraulic fluid, temperature) with the necessary safety factors.

– The service line ports and function ports are only designed to accommodate hydraulic lines.

– The data and notes contained herein must be adhered to.

– The product is not approved as a component for the safety concept of a general machine according to DIN 13849.

– The following tightening torques apply:

- Fittings:
  Observe the manufacturer‘s instructions regarding the tightening torques of the fittings used.

- Mounting bolts:
  For fixing screws with metric ISO thread according to DIN 13 or thread according to ASME B1.1, we recommend checking the tightening torque individually according to VDI 2230.

- Mounting bolts threads and threaded ports in the axial piston unit:
  The maximum permissible tightening torques $M_{G\,max}$ are maximum values for the female threads and must not be exceeded. For values, see the following table.

- Threaded plugs:
  For the threaded plugs, supplied with the axial piston unit, the required tightening torques M_V apply.
  For values, see the following table.

Ports **Standard**	**Thread sizes**	**Maximum permissible tightening torque for the female threads $M_{G\,max}$**	**Required tightening torque for the threaded plugs M_V**	**WAF hexagon socket of the threaded plugs**
DIN 3852	M14 x 1.5	80 Nm	35 Nm[1)]	6 mm
	M18 x 1.5	140 Nm	60 Nm[1)]	8 mm
	M27 x 2	330 Nm	135 Nm[1)]	12 mm
ISO 11926	3/4-16 UNF-2B	160 Nm	62 Nm	5/16 in
	7/8-14 UNF-2B	240 Nm	110 Nm	3/8 in

1) The tightening torques apply for screws in the “dry” state as received on delivery and in the “lightly oiled” state for installation.

Axial piston motors
Variable motors

Designation	Type	Size	Series	Data sheet	Page
Variable motor	A6VM	28...1000	63	91604	233
Variable motor	A6VM	55...200	65	91607	289
Variable motor	A6VM	60...215	71	91610	365
Variable motor	A6VM	280	71	91611	441
Variable plug-in motor	A6VE	28...250	63	91606	467
Variable plug-in motor	A6VE	55...200	65	91615	507
Variable plug-in motor	A6VE	60...215	71	91616	549
Variable motor	A10VM/E	28...85	52	91703	591
Reversible axial piston variable motor for hydrostatic fan drives	A10VER	30...45	52	91706	619

Axial piston variable motor
A6VM Series 63

Europe

RE-E 91604
Edition: 05.2016
Replaces: 06.2012

- All-purpose high pressure motor
- Sizes 28:
  Nominal pressure 400 bar
  Maximum pressure 450 bar
- Sizes 250 to 1000:
  Nominal pressure 350 bar
  Maximum pressure 400 bar
- Open and closed circuits

Features

- Robust motor with long service life
- Approved for very high rotational speeds
- High control range (can be swiveled to zero)
- High torque
- Variety of controls
- Optionally with flushing and boost-pressure valve mounted
- Optionally with integrated or mounted counterbalance valve
- Bent-axis design

Contents

Type code	2
Hydraulic fluids	5
Bearing	6
Shaft seal	6
Working pressure range	7
Technical data	8
HD – Proportional control, hydraulic	10
EP – Proportional control, electric	14
HZ – Two-point control, hydraulic	18
EZ – Two-point control, electric	20
HA – Automatic high-pressure related control	22
DA – Automatic control, speed related	28
Electric travel direction valve (for DA, HA.R)	30
Dimensions, sizes 28	31
Dimensions, sizes 250 to 1000	35
Connector for solenoids	47
Flushing and boost-pressure valve	48
Swivel angle indicator	50
Speed sensor	51
Installation instructions	52
Project planning notes	54
Safety instructions	55

Type code

01	02	03	04	05	06	07	08		09	10	11		12	13	14	15	16	17	18	19		20
	A6V		**M**					**/**	**63**	**W**		**–**	**V**								**–**	

Hydraulic fluid

01	Mineral oil and HFD. HFD for sizes 250 to 1000 only in conjunction with long-life bearings “L” (without code)		
	HFB, HFC hydraulic fluid	Sizes 28 (without code)	
		Sizes 250 to 1000 (only in conjunction with long-life bearings “L”)	**E**

Axial piston unit

02	Bent-axis design, variable	**A6V**

Drive shaft bearing		**250**	**355**	**500**	**1000**	
03	Standard bearings (without code)	●	●	●	–	
	Long-life bearings	●	●	●	●	**L**

Operating mode

04	Motor (plug-in motor A6VE, see data sheet 91606)	**M**

Size (NG)		**28**	**250**	**355**	**500**	**1000**
05	Geometric displacement, see page 8					

Control device[1)]

06	Proportional control, hydraulic	Δp_{St} = 10 bar	●	●	●	●	●	**HD1**
		Δp_{St} = 25 bar	●	●	●	●	●	**HD2**
		Δp_{St} = 35 bar	–	●	●	●	●	**HD3**
	Proportional control, electric	U = 12 V	●	●	●	●	●	**EP1**
		U = 24 V	●	●	●	●	●	**EP2**
	Two-point control, hydraulic		–	●	●	●	●	**HZ**
			●	–	–	–	–	**HZ1**
			–	–	–	–	–	**HZ3**
	Two-point control, electric	U = 12 V	●	●	●	●	●	**EZ1**
		U = 24 V	●	●	●	●	●	**EZ2**
		U = 12 V	–	–	–	–	–	**EZ3**
		U = 24 V	–	–	–	–	–	**EZ4**
	Automatic control, high-pressure related	With minimum pressure increase Δp ≤ approx. 10 bar	●	●	●	●	●	**HA1**
		With pressure increase Δp = 100 bar	●	●	●	●	●	**HA2**
	Automatic control, speed related							
	p_{St}/p_{HD} = 3/100	Hydraulic travel direction valve	–	●	●	●	○	**DA**
	p_{St}/p_{HD} = 5/100	Hydraulic travel direction valve	●	–	–	–	–	**DA1**
		Electric travel direction valve + electric $V_{g\,max}$ circuit, U = 12 V	●	–	–	–	–	**DA2**
		Electric travel direction valve + electric $V_{g\,max}$ circuit, U = 24 V	●	–	–	–	–	**DA3**
	p_{St}/p_{HD} = 8/100	Hydraulic travel direction valve	●	–	–	–	–	**DA4**
		Electric travel direction valve + electric $V_{g\,max}$ circuit, U = 12 V	●	–	–	–	–	**DA5**
		Electric travel direction valve + electric $V_{g\,max}$ circuit, U = 24 V	●	–	–	–	–	**DA6**

Pressure control/override (only for HD, EP)		**28**	**250**	**355**	**500**	**1000**	
07	Without pressure control/override	●	●	●	●	●	
	Pressure control, fixed setting	●	●	●	●	●	**D**
	Hydraulic override, two-point	●	2)	2)	2)	2)	**E**
	Hydraulic remote control, proportional	–	●	●	●	●	**G**

● = Available ○ = On request – = Not available

1) Specify response time damping when ordering (size 28)

2) 2nd pressure setting fitted as standard with version D (sizes 250 to 1000)

01	02	03	04	05	06	07	08		09	10	11		12	13	14	15	16	17	18	19		20
	A6V		**M**					**/**	**63**	**W**		**–**	**V**								**–**	

Overrides for the HA1 and HA2 controls

			28	250	355	500	1000	
08	Without override (without code)		●	●	●	●	●	
	Hydraulic override, remote control, proportional		●	●	●	●	●	**T**
	Remote control electric override, two-point	U = 12 V	●	–	–	–	–	**U1**
		U = 24 V	●	–	–	–	–	**U2**
	Electric override	U = 12 V	●	–	–	–	–	**R1**
	+ travel direction valve, electric	U = 24 V	●	–	–	–	–	**R2**

Series

09	Series 6, index 3	**63**

Direction of rotation

10	Viewed on drive shaft, bidirectional	**W**

Setting ranges for displacement[3)]

			28	250	355	500	1000	
11	$V_{g\,min}$ = 0 to 0.7 $V_{g\,max}$		●	–	–	–	–	
	$V_{g\,min}$ = 0 to 0.4 $V_{g\,max}$	$V_{g\,max}$ = $V_{g\,max}$ to 0.8 $V_{g\,max}$	–	●	●	●	●	**1**
	$V_{g\,min}$ > 0.4 $V_{g\,max}$ to 0.8 $V_{g\,max}$	$V_{g\,max}$ = $V_{g\,max}$ to 0.8 $V_{g\,max}$	–	●	●	●	●	**2**

Sealing material

12	FKM (fluoroelastomer)	**V**

Drive shaft

			28	250	355	500	1000	
13	Splined shaft DIN 5480		●	–	–	–	–	**A**
			●	●	●	●	●	**Z**
	Parallel keyed shaft DIN 6885		–	●	●	●	●	**P**

Mounting flange

			28	250	355	500	1000	
14	ISO 3019-2	4-hole	●	●	–	–	–	**B**
		8-hole	–	–	●	●	●	**H**

Port plate for working line[4)]

				28	250	355	500	1000	
15	SAE working ports **A** and **B** at rear	**01**	0	●	●	●	●	●	**010**
			7	●	●	●	●	●	**017**
	SAE working ports **A** and **B** lateral, opposite	**02**	0	●	●	●	●	●	**020**
			7	●	●	●	●	●	**027**
	SAE working ports **A** and **B** lateral, opposite + rear	**15**	0	–	●	●	●	●	**150**
	Port plate with 1-stage pressure relief valves for mounting a counterbalance valve[5)]	**38**	0	–	●[6)]	–	–	–	**380**
			8	–	●[6)]	–	–	–	**388**

Valve (see page 48)

Without valve	**0**
Flushing and boost-pressure valve, mounted	**7**
Counterbalance valve mounted[7)]	**8**

● = Available ○ = On request – = Not available

3) Please specify exact settings for $V_{g\,min}$ and $V_{g\,max}$ in plain text when ordering: $V_{g\,min}$ = ... cm³, $V_{g\,max}$ = ... cm³
4) Fastening thread, metric
5) Only possible in combination with HD, EP and HA control.
6) Counterbalance valve MHB32, please contact us.

Type code

01	02	03	04	05	06	07	08		09	10	11		12	13	14	15	16	17	18	19		20
	A6V		**M**					**/**	**63**	**W**		**–**	**V**								**–**	

Speed sensor (see page 51)		**28**	**250**	**355**	**500**	**1000**[8]	
16	Without speed sensor (without code)	●	●	●	●	●	**0**
	Prepared for HDD speed sensor	▲	●	●	●	–	**F**
	HDD speed sensor mounted[9]	▲	●	●	●	–	**H**
	Prepared for DSM/DSA speed sensor	●	–	–	–	–	**U**
	DSM/DSA speed sensor mounted[9]	●	–	–	–	–	**V**

Swivel angle sensor (see page 50)		**28**	**250**	**355**	**500**	**1000**	
17	Without swivel angle sensor	●	●	●	●	–	
	Optical swivel angle sensor	–	●	●	●	●	**V**
	Electric swivel angle sensor	–	●	●	●	●	**E**

Connector for solenoids (see page 47)		**28**	**250 to 1000**	
18	Without connector (without solenoid, with hydraulic control only) (sizes 250 to 1000)	●	–	**0**
		–	●	
	DEUTSCH molded connector, 2-pin – without suppressor diode	●	–	**P**
	HIRSCHMANN connector – without suppressor diode	–	●	

Beginning of control		**28**	**250**	**355**	**500**	**1000**	
19	At $V_{g\,min}$ (standard for HA)	●	●	●	●	●	**A**
	At $V_{g\,max}$ (standard for HD, HZ, EP, EZ, DA)	●	●	●	●	●	**B**

Standard / special version		
20	Standard version	
	Standard version with installation variants, e.g. **T** ports open and closed contrary to standard	**-Y**
	Special version	**-S**

● = Available o = On request ▲ = Not for new projects – = Not available

Notice

- ▶ Note the project planning notes on page 54.
- ▶ In addition to the type code, please specify the relevant technical data when placing your order.

7) Please contact us.

8) Specify type code separately for sensor in accordance with data sheet 95132 – DSM or 95133 – DSA, 95135 – HDD and observe the requirements for the electronics.

Hydraulic fluids

The A6VM variable motor is designed for operation with HLP mineral oil according to DIN 51524. Application instructions and requirements for hydraulic fluids should be taken from the following data sheets before the start of project planning:

- 90220: Hydraulic fluids based on mineral oils and related hydrocarbons
- 90221: Environmentally acceptable hydraulic fluids
- 90222: Fire-resistant, water-free hydraulic fluids (HFDR/HFDU)
- 990223: Fire-resistant, water-containing hydraulic fluids (HFC, HFB)
- 90225: Axial piston units for operation with water-free and water-containing fire-resistant hydraulic fluids (HFDR, HFDU, HFB, HFC).

The variable motor A6VM is not suitable for operation with HFA fluids. If operating with HFB-, HFC- and HFD or environmentally acceptable hydraulic fluids, the limitations regarding technical data or other seals must be observed.

Notes on selection of hydraulic fluid

The hydraulic fluid should be selected such that the operating viscosity in the operating temperature range is within the optimum range (ν_{opt} see selection diagram).

Notice

At no point of the component may the temperature be higher than 115 °C. The temperature difference specified in the table is to be taken into account when determining the viscosity in the bearing.

If the above conditions cannot be maintained due to extreme operating parameters, we recommend the use of a flushing and boost-pressure valve (see page 48).

Viscosity and temperature of hydraulic fluids

	Viscosity	Temperature	Comment
Cold start[1]	$\nu_{max} \leq 1600$ mm²/s	$\theta_{St} \geq$ -40 °C	$t \leq 3$ min, $n \leq 1000$ rpm, without load $p \leq 50$ bar
Permissible temperature difference		$\Delta T \leq 25$ K	between axial piston unit and hydraulic fluid in the system
Warm-up phase	ν = 1600 to 400 mm²/s	θ = -40 °C to -25 °C	at $p \leq 0.7 \times p_{nom}$, $n \leq 0.5 \times n_{nom}$ and $t \leq 15$ min
Continuous operation	ν = 400 to 10 mm²/s		This corresponds, for example on the VG 46, to a temperature range of +5 °C to +85 °C (see selection diagram)
		θ = -25 °C to +103 °C	Note the permissible temperature range of the shaft seal measured at port **T** (ΔT = approx. 12 K between the bearing/shaft seal and port **T**)
	ν_{opt} = 36 to 16 mm²/s		Range of optimum operating viscosity and efficiency
Short-term operation	$\nu_{min} \geq$ 7 mm²/s		$t < 3$ min, $p < 0.3 \times p_{nom}$

1) For application cases below -25 °C, an NBR shaft seal is required (permissible temperature range -40 °C to +90 °C).

▼ **Selection diagram**

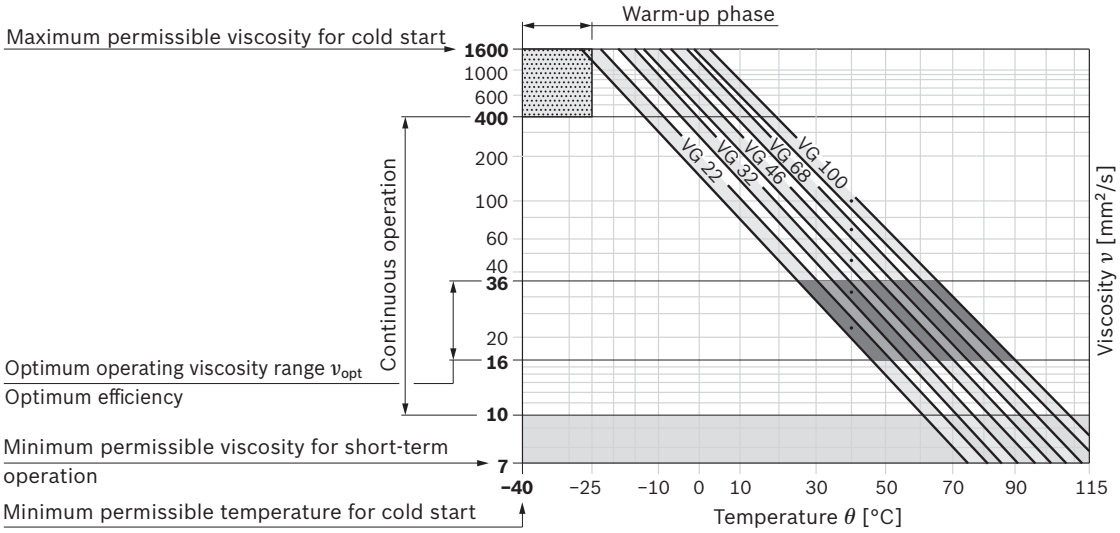

Filtration of the hydraulic fluid

Finer filtration improves the cleanliness level of the hydraulic fluid, which increases the service life of the axial piston unit. A cleanliness level of at least 20/18/15 is to be maintained according to ISO 4406.

At very high hydraulic fluid temperatures (90 °C to maximum 103 °C, measured at port **T**), a cleanliness level of at least 19/17/14 according to ISO 4406 is necessary.

Effect of case pressure on beginning of control

An increase in case pressure affects the beginning of control of the variable motor when using the following control options:

- HD, HA.T3: increase
- HD, EP, HA, HA.T (Sizes 250 to 1000): increase
- DA: decrease

With the following settings, an increase in case pressure will have no effect on the beginning of control:

HA.R and HA.U, EP, HA

The factory settings for the beginning of control are made at p_{abs} = 2 bar (size 28) and p_{abs} = 1 bar (sizes 250 to 1000) case pressure.

Flow direction

Direction of rotation, viewed on drive shaft	
clockwise	counter-clockwise
A to **B**	**B** to **A**

Bearing

Long-life bearing, NG250-1000

For long service life and use with HF hydraulic fluids. Identical external dimensions as motor with standard bearings. Subsequent conversion to long-life bearings is possible.

Flushing

Flushing flow (recommended)

Size	250	355	500	1000
$q_{v\,flush}$ [l/min]	10	16	16	16

To reduce the leakage temperature, external case flushing is possible via port **U** or internally via a flushing valve.

Shaft seal

Permissible pressure loading

The service life of the shaft seal is influenced by the rotational speed of the axial piston unit and the leakage pressure in the housing (case pressure). Momentary (t < 0.1 s) pressure peaks of up to 10 bar are allowed. Case pressures of a continuous 2 bar maximum are permitted to be able to utilize the entire speed range. Higher case pressures are permissible at lower rotational speeds (see diagram).

The service life of the shaft seal decreases with increasing frequency of pressure peaks and increasing mean differential pressure.

The case pressure must be equal to or higher than the ambient pressure.

▼ **Size 28**

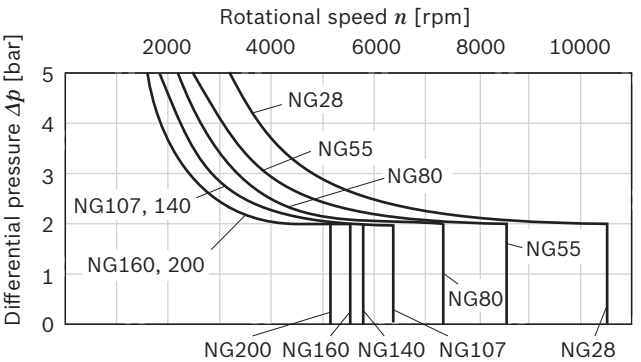

▼ **Sizes 250 to 1000**

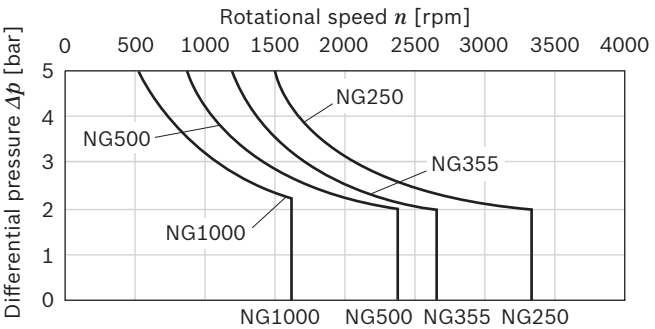

The FKM shaft seal ring may be used for leakage temperatures from -25 °C to +115 °C. For application cases below -25 °C, an NBR shaft seal is required (permissible temperature range: -40 °C to +90 °C).

Working pressure range

Pressure at working port A or B			Definition
Nominal pressure p_{nom}	NG28	400 bar	The nominal pressure corresponds to the maximum design pressure.
	NG250 to 1000	350 bar	
Maximum pressure p_{max}	NG28	450 bar	The maximum pressure corresponds to the maximum working pressure within the single operating period. The sum of the single operating periods must not exceed the total operating period.
	NG250 to 1000	400 bar	
Single operating period		10 s	
Total operating period		300 h	
Minimum pressure (high-pressure side)		25 bar	Minimum pressure at the high-pressure side (**A** or **B**) required to prevent damage to the axial piston unit.
Minimum pressure – operation as a pump (inlet)		See diagram below	To avoid damage to the axial piston motor during operation as a pump (change of the high-pressure side at constant direction of rotation, e.g. during braking processes) a minimum pressure has to be ensured at the working port (inlet). The minimum required pressure is dependent on the rotational speed and displacement of the axial piston unit (see characteristic curve).
Summation pressure p_{Su} (pressure **A** + pressure **B**)		700 bar	The summation pressure is the sum of the pressures at the ports for the working lines (**A** and **B**)
Rate of pressure change $R_{A\,max}$			Maximum permissible rate of pressure build-up and reduction during a pressure change across the entire pressure range.
with built-in pressure relief valve		9000 bar/s	
without pressure relief valve		16000 bar/s	

▼ **Rate of pressure change $R_{A\,max}$**

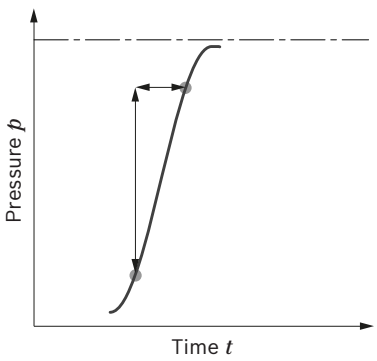

▼ **Pressure definition**

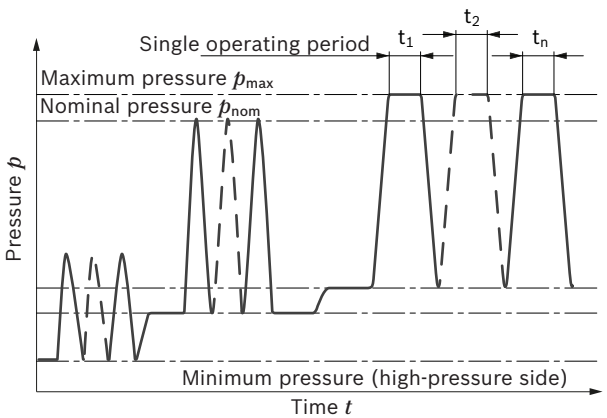

Total operating period = $t_1 + t_2 + ... + t_n$

▼ **Minimum pressure – operation as a pump (inlet)**

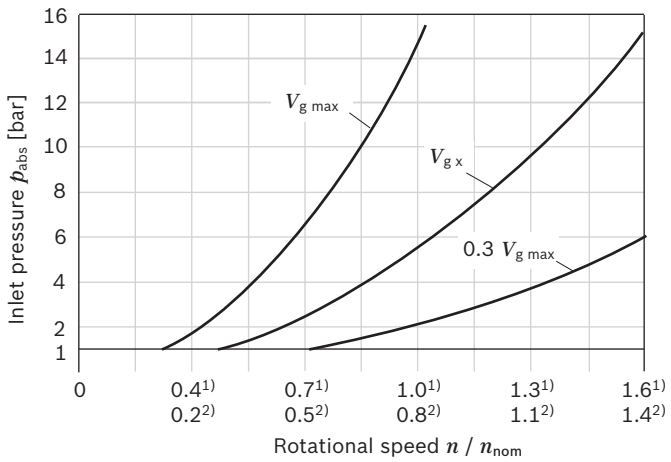

This diagram is only valid for the optimum viscosity range of ν_{opt} = 36 to 16 mm²/s.
If the above mentioned conditions cannot be ensured please contact us.

Notice
Working pressure range valid when using hydraulic fluids based on mineral oils. Values for other hydraulic fluids, please contact us.

1) For size 28
2) For sizes 250 to 1000

Technical data

Size		NG		28	250	355	500	1000
Geometric displacement, per revolution[1]		$V_{g\,max}$	cm³	28.1	250	355	500	1000
		$V_{g\,min}$	cm³	0	0	0	0	0
		$V_{g\,x}$	cm³	18	205	300	417	1000
Maximum rotational speed[2] (while adhering to the maximum permissible inlet flow)	at $V_{g\,max}$	n_{nom}	rpm	5550	2700	2240	2000	1600
	at $V_g < V_{g\,x}$ (see diagram on page 8)	n_{max}	rpm	8750	3300	2650	2400	1600
	where $V_{g\,0}$	n_{max}	rpm	10450	3300	2650	2400	1600
Inlet flow[3]	at n_{nom} and $V_{g\,max}$	$q_{v\,max}$	l/min	156	675	795	1000	1600
Torque	at $V_{g\,max}$ and Δp = 400 bar	T	Nm	179	–	–	–	–
	at $V_{g\,max}$ and Δp = 350 bar	T	Nm	157	1391	1978	2785	5571
Rotary stiffness	$V_{g\,max}$ to $V_g/2$	c_{min}	kNm/rad	6	60	75	115	281
	$V_g/2$ to 0 (interpolated)	c_{min}	kNm/rad	18	181	262	391	820
Moment of inertia for rotary group		J_{TW}	kgm²	0.0014	0.061	0.102	0.178	0.55
Maximum angular acceleration		α	rad/s²	47000	10000	8300	5500	4000
Case volume		V	l	0.5	3.00	5.0	7.0	16.0
Weight approx.		m	kg	16	100	170	210	430

Speed range

The minimum rotational speed n_{min} is not restricted. Please consult us regarding applications requiring uniformity of the rotatory motion at low speeds.

Notice

- Theoretical values, without efficiency and tolerances; values rounded
- Operation above the maximum values or below the minimum values may result in a loss of function, a reduced service life or in the destruction of the axial piston unit. Other permissible limit values, such as speed variation, reduced angular acceleration as a function of the frequency and the permissible angular acceleration at start (lower than the maximum angular acceleration) can be found in data sheet 90261.

Permissible displacement in relation to rotational speed

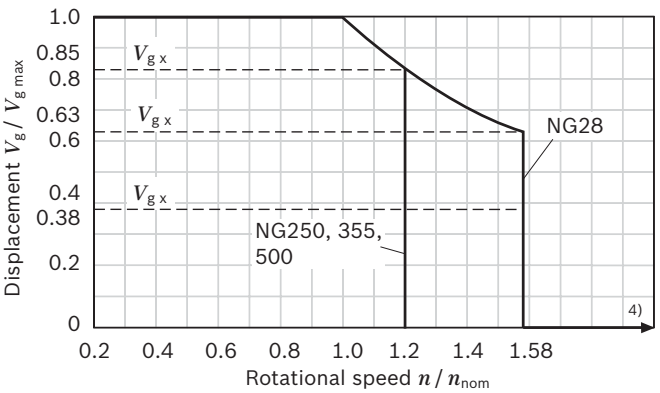

Determining the operating characteristics					
Inlet flow	q_v	=	$\frac{V_g \times n}{1000 \times \eta_v}$		[l/min]
Rotational speed	n	=	$\frac{q_v \times 1000 \times \eta_v}{V_g}$		[rpm]
Torque	T	=	$\frac{V_g \times \Delta p \times \eta_{hm}}{20 \times \pi}$		[Nm]
Power	P	=	$\frac{2 \pi \times T \times n}{60000}$	= $\frac{q_v \times \Delta p \times \eta_t}{600}$	[kW]

Key

V_g	Displacement per revolution [cm³]
Δp	Differential pressure [bar]
n	Rotational speed [rpm]
η_v	Volumetric efficiency
η_{hm}	Hydraulic-mechanical efficiency
η_t	Total efficiency ($\eta_t = \eta_v \times \eta_{hm}$)

1) The minimum and maximum displacement can be steplessly adjusted, see type code on page 3. (standard setting for sizes 250 to 1000 if ordering code is missing: $V_{g\,min} = 0.2 \times V_{g\,max}$, $V_{g\,max} = V_{g\,max}$).
2) The values are applicable:
   – for the optimum viscosity range from ν_{opt} = 36 to 16 mm²/s
   – with hydraulic fluid based on mineral oils
3) Torque without radial force, with radial force, see page 9.
4) Values in this range on request

Permissible radial and axial forces of the drive shafts

Size		NG		28	28	250	250	355	355	500	500	1000	1000
Drive shaft		Code		A	Z	Z	P	Z	P	Z	P	Z	P
	Splined shaft			W30	W25	W50	–	W60	–	W70	–	W90	–
	Keyed shaft	ø	mm	–	–	–	50	–	60	–	70	–	90
Maximum radial force at distance a (from shaft collar)		$F_{q\ max}$	N	4838	6436	1200[1]	1200[1]	1500[1]	1500[1]	1900[1]	1900[1]	2600[1]	2600[1]
		a	mm	17.5	14.0	41.0	41.0	52.5	52.5	52.5	52.5	67.5	67.5
Maximum torque at $F_{q\ max}$		$T_{q\ max}$	Nm	179	179	[2]	[2]	[2]	[2]	[2]	[2]	[2]	[2]
Maximum differential pressure at V_{gmax} and $F_{q\ max}$		$\Delta p_{q\ max}$	bar	400	400	[2]	[2]	[2]	[2]	[2]	[2]	[2]	[2]
Maximum axial force at standstill or depressurized operation 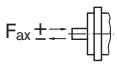		$+F_{ax\ max}$	N	0	0	0	0	0	0	0	0	0	0
		$-F_{ax\ max}$	N	315	315	1200	1200	1500	1500	1900	1900	2600	2600
Permissible axial force per bar working pressure		$+F_{ax\ perm/bar}$	N/bar	4.6	4.6	[2]	[2]	[2]	[2]	[2]	[2]	[2]	[2]

Effect of radial force F_q on the service life of bearings

By selecting a suitable direction of radial force F_q, the load on the bearings, caused by the internal rotary group forces can be reduced, thus optimizing the service life of the bearings. Recommended position of mating gear is dependent on direction of rotation. Examples:

▼ **Toothed gear output drive**

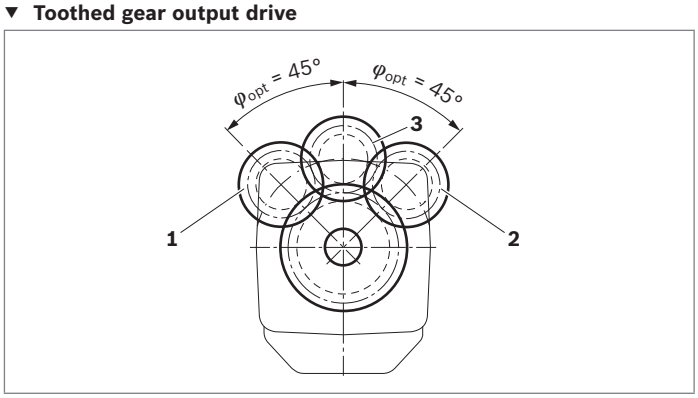

1 “Counter-clockwise” rotation. Pressure at port **B**
2 “Clockwise” rotation, pressure at port **A**
3 Bidirectional direction of rotation

Notice

- The values given are maximum values and do not apply to continuous operation.
- The permissible axial force in direction $-F_{ax}$ is to be avoided as the lifetime of the bearing is reduced.
- Special requirements apply in the case of belt drives. Please contact us.

1) When at standstill or when axial piston unit working in depressurized conditions. Higher forces are permissible under pressure, please contact us.
2) Please contact us.

HD – Proportional control, hydraulic

The proportional hydraulic control provides infinite adjustment of the displacement. The control is proportional to the pilot pressure at port **X**.

HD1, HD2, HD3

- Beginning of control at $V_{g\,max}$ (maximum torque, minimum rotational speed at minimum pilot pressure).
- End of control at $V_{g\,min}$ (minimum torque, maximum permissible rotational speed, at maximum pilot pressure).

Notice

- Maximum permissible pilot pressure: p_{St} = 100 bar
- The control oil is internally taken out of the high pressure side of the motor (**A** or **B**). For reliable control, a working pressure of at least 30 bar is necessary in **A** (**B**). If a control operation is performed at a working pressure < 30 bar, an auxiliary pressure of at least 30 bar must be applied at port **G** using an external check valve. For lower pressures, please contact us.
  Please note that at port **G** up to 450 bar (size 28) or 400 bar (sizes 250 to 1000) can occur.
- Specify the desired beginning of control in plain text when ordering, e.g.: beginning of control at 10 bar.
- The beginning of control and the HD-characteristic curve are influenced by case pressure. An increase in the case pressure causes an increase in the beginning of control (see page 7) and thus a parallel displacement of the characteristic curve.
- A leakage flow of maximum 0.3 l/min can occur at port **X** due to internal leakage (working pressure > pilot pressure). The control is to be suitably configured to avoid an independent build-up of pilot pressure.

Response time damping

The response time damping impacts the pivot behavior of the motor and consequently the machine response speed.

Standard for size 28

HD1, HD2 without damping.
HD.D, HD.E with throttle pin on both sides, symmetrical (see table)

Option for size 28

HD1, HD2, with throttle pin on both sides, symmetrical (see table)

▼ **Throttle pin overview**

Size	28	55	80	107	140	160	200
Groove size [mm]	0.3	0.45	0.45	0.55	0.55	0.55	0.65

Standard for sizes 250 to 1000

HD1, HD2 and HD3 with orifice (ø1.2 mm)
HD.D, HD.E, HP.G with adjustable response time limiting valve with orifice (ø1.2 mm)

HD1, pilot pressure increase Δp_{St} = 10 bar

A pilot pressure increase of 10 bar at port **X** will cause a reduction in displacement from $V_{g\,max}$ to 0 cm³ (size 28) or from $V_{g\,max}$ to 0.2 $V_{g\,max}$ (sizes 250 to 1000).
Beginning of control, setting range 2 to 20 bar
Standard setting: beginning of control at 3 bar (end of control at 13 bar)

▼ **Characteristic curve**

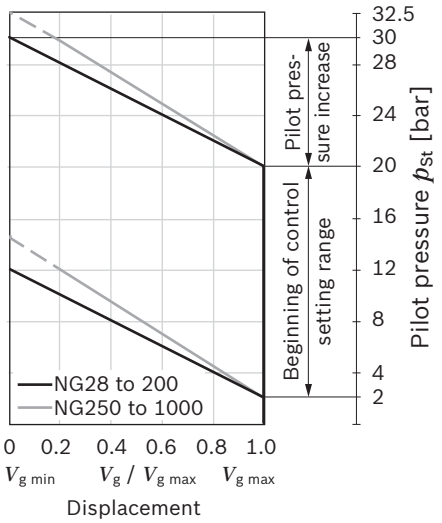

HD2, pilot pressure increase Δp_{St} = 25 bar

A pilot pressure increase of 25 bar at port **X** results in a reduction in displacement from $V_{g\,max}$ to 0 cm³ (size 28) or from $V_{g\,max}$ to 0.2 $V_{g\,max}$ (sizes 250 to 1000).
Beginning of control, setting range 5 to 35 bar
Standard setting: beginning of control at 10 bar (end of control at 35 bar)

▼ **Characteristic curve**

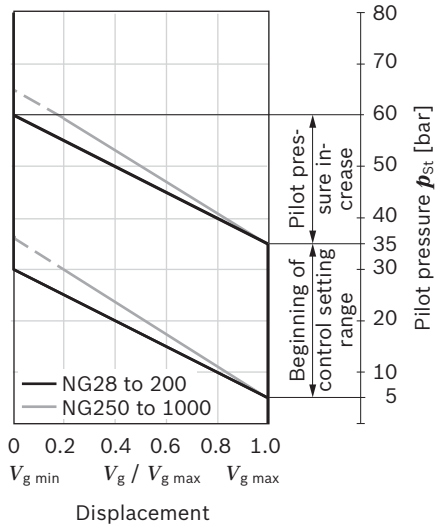

HD3, pilot pressure increase Δp_{St} = 35 bar

(sizes 250 to 1000)
A pilot pressure increase of 35 bar at port **X** results in a reduction in displacement from $V_{g\,max}$ to 0.2 $V_{g\,max}$.
Beginning of control, setting range 7 to 50 bar
Standard setting: beginning of control at 10 bar (end of control at 45 bar)

▼ **Characteristic curve**

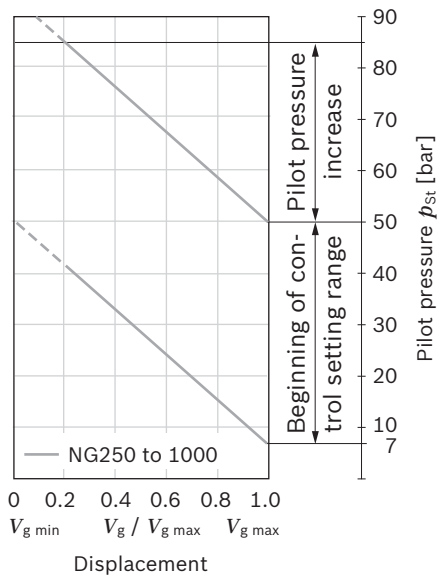

▼ **Circuit diagram HD1, HD2, size 28**

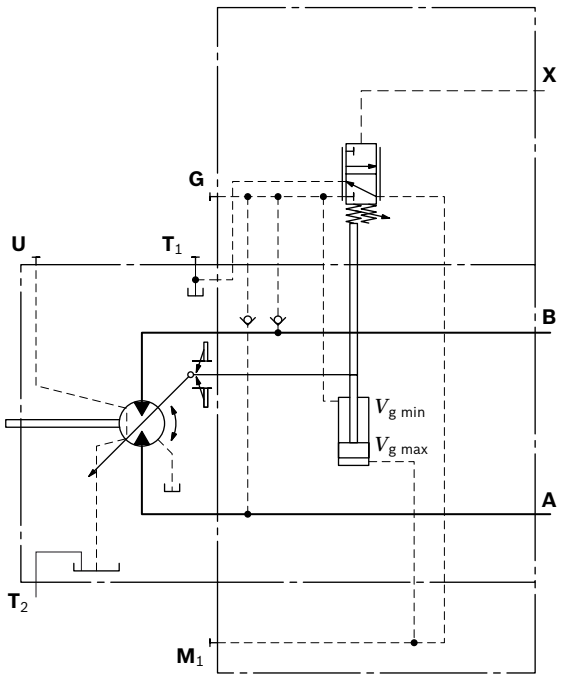

▼ **Circuit diagramHD1, HD2, HD3, sizes 250 to 1000**

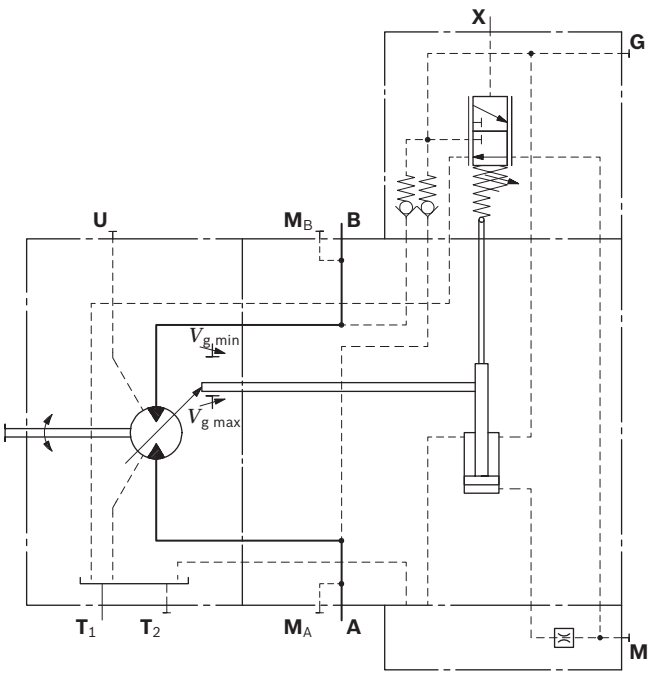

Europe | RE-2 91304/05 2016 | Bosch Rexroth AG

243

HD.D Pressure control, fixed setting

The pressure control overrides the HD control function. If the load torque or a reduction in motor swivel angle causes the system pressure to reach the setpoint value of the pressure control, the motor will swivel towards a larger angle. The increase in displacement and the resulting reduction in pressure cause the control deviation to decrease. With the increase in displacement the motor develops more torque, while the pressure remains constant.

Size 28:

Setting range of the pressure control valve 80 to 400 bar

Sizes 250 to 1000:

Setting range of the pressure control valve 80 to 350 bar

▼ **Circuit diagram HD.D, size 28**

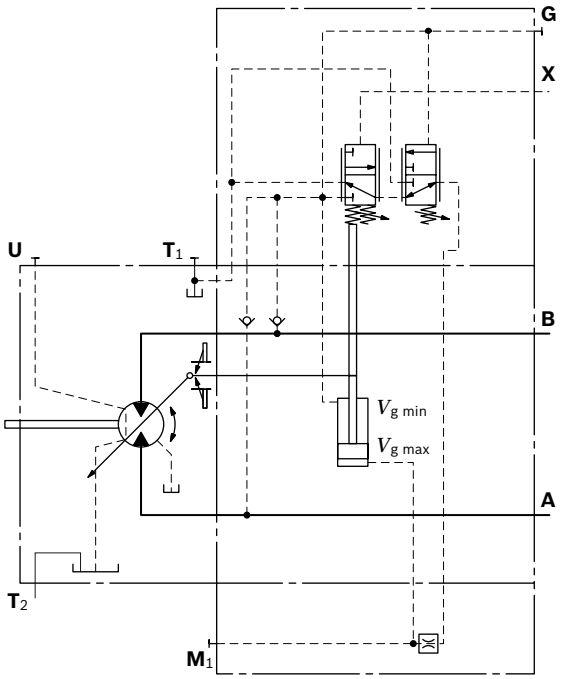

▼ **Circuit diagram HD.D, sizes 250 to 1000**

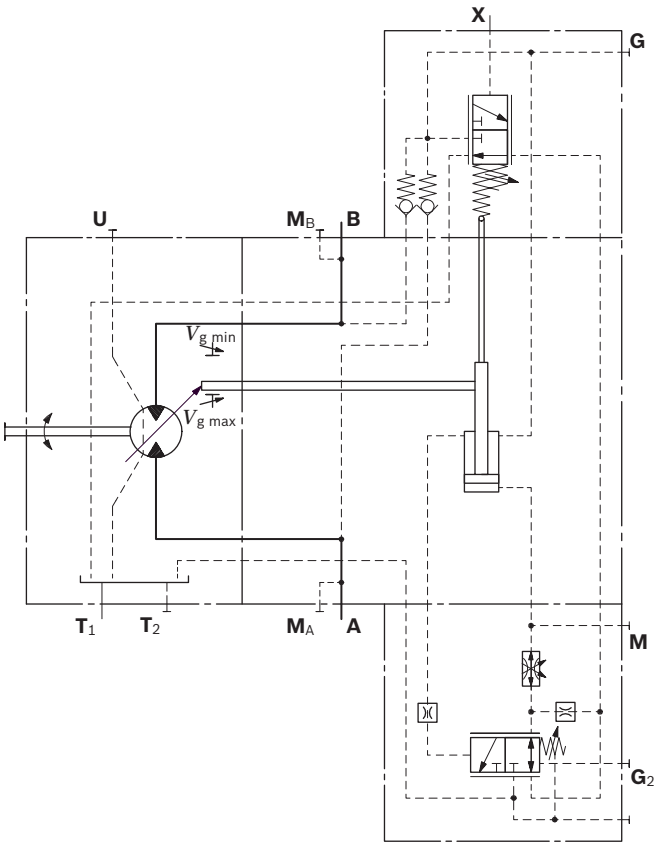

HD.E pressure control, hydraulic override, two-point, size 28

The pressure control setting can be overridden by applying an external pilot pressure at port **G**$_2$, realizing a 2nd pressure setting.

Necessary pilot pressure at port **G**$_2$:

p_{St} = 20 to 50 bar

When ordering, please specify the 2nd pressure setting in plain text.

▼ **Circuit diagram HD.E**

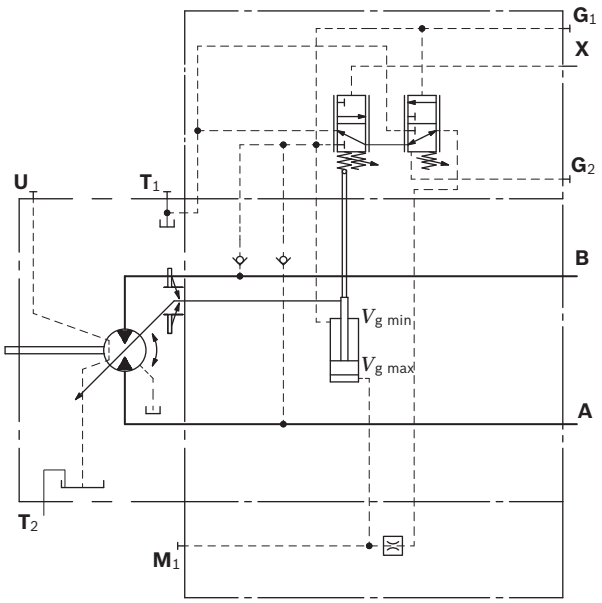

Sizes 250 to 1000 (HD.D)

Pressure control with 2nd pressure setting for HD.D provided as standard (see page 12).

The pressure control setting can be overridden by applying an external pilot pressure at port **G**$_2$, realizing a 2nd pressure setting.

Necessary pilot pressure at port **G**$_2$:

p_{St} ≥ 130 bar

When ordering, please specify the 2nd pressure setting in plain text.

HD.G pressure control, remote controlled, sizes 250 to 1000

When the pressure command value is reached, the remote controlled pressure control continually regulates the motor to maximum displacement $V_{g\,max}$. A pressure relief valve (not included in the scope of delivery), which is located separately from the motor and which is connected to port **X**$_3$, assumes the task of controlling the internal pressure cut-off valve. So long as the pressure command value has not been reached, pressure is evenly applied to the valve from both sides in addition to the spring force, and the valve remains closed. The pressure command value is between 80 bar and 350 bar. When the pressure command value is reached at the separate pressure-relief valve, this will open, reliving the pressure on the spring side to the reservoir. The internal control valve switches and the motor swivels to maximum displacement $V_{g\,max}$.

The differential pressure at the DRG control valve is set as standard to 25 bar. As a separate pressure relief valve, we recommend: DBD 6 (hydraulic) as per data sheet 25402; maximum line length should not exceed 2 m.

▼ **Circuit diagram HD.G**

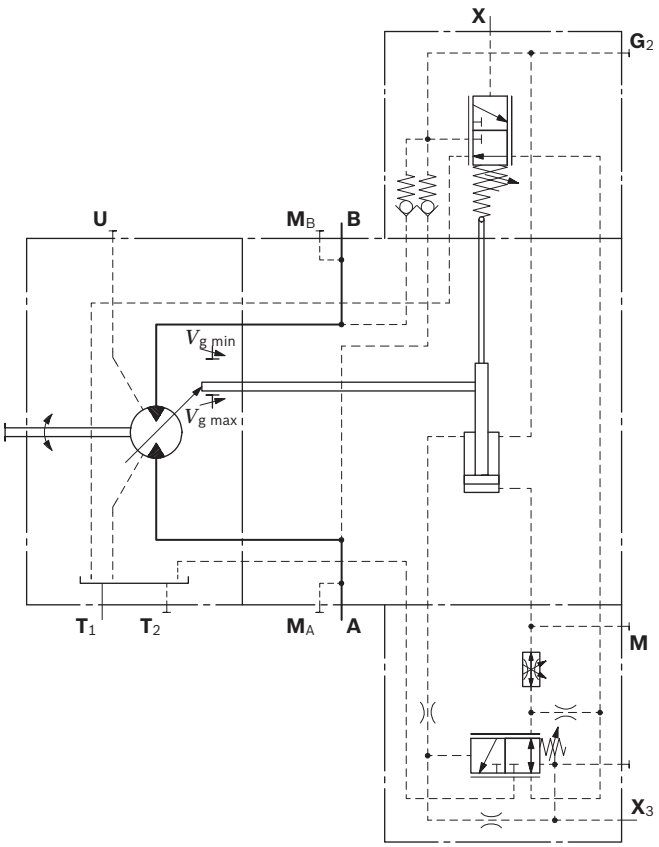

EP – Proportional control, electric

The electric control with proportional solenoid (size 28) or proportional valve (sizes 250 to 1000) enable the displacement to be steplessly adjusted. Control is proportional to the electric control current applied to the solenoid.
Sizes 250 to 1000 require an external pilot oil supply at port **P** with a pressure of p_{min} = 30 bar (p_{max} = 100 bar).

- Beginning of control at $V_{g\,max}$ (maximum torque, minimum rotational speed at minimum control current)
- End of control at $V_{g\,min}$ (minimum torque, maximum permissible rotational speed at maximum control current)

▼ **Characteristic curve**

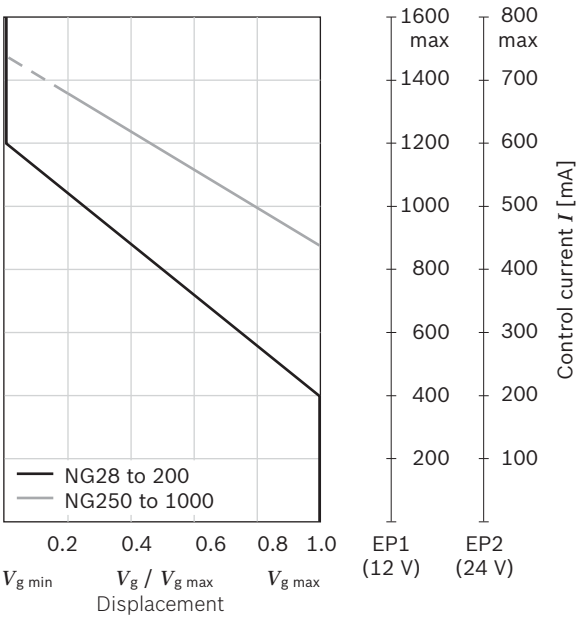

Notice

- The control oil is internally taken out of the high pressure side of the motor (**A** or **B**). For reliable control, a working pressure of at least 30 bar is necessary in **A** (**B**). If a control operation is performed at a working pressure < 30 bar, an auxiliary pressure of at least 30 bar must be applied at port **G** using an external check valve. For lower pressures at port **G**, please contact us.
  Please note that at port **G** up to 450 bar (size 28) or 400 bar (sizes 250 to 1000) can occur.
- The following only needs to be noted for sizes 250 to 1000:
  - The beginning of control and the **EP** characteristic curve are influenced by the case pressure. An increase in the case pressure causes an increase in the beginning of control (see page 6) and thus a parallel displacement of the characteristic curve.

Response time damping
The response time damping impacts the pivot behavior of the motor and consequently the machine response speed.
Standard for size 28
EP1, EP2 without damping.
EP.D, EP.E with throttle pin on both sides, symmetrical (see table)
Option for size 28
EP1, EP2, with throttle pin on both sides, symmetrical (see table)

▼ **Throttle pin overview**

Size	28
Groove size [mm]	0.3

Standard for sizes 250 to 1000
EP1, EP2 with orifice (ø1.2 mm)
EP.D, EP.E, EP.G with adjustable response time limiting valve

Technical data, solenoid, size 28	EP1	EP2
Voltage	12 V (±20%)	24 V (±20%)
Control current		
Beginning of control	400 mA	200 mA
End of control	1200 mA	600 mA
Current limit	1.54 A	0.77 A
Nominal resistance (at 20 °C)	5.5 Ω	22.7 Ω
Dither		
Frequency	100 Hz	100 Hz
minimum oscillation range[1)]	240 mA	120 mA
Duty cycle	100%	100%
Type of protection: see connector version page 47		

Various BODAS controllers with application software and amplifiers are available for controlling the proportional solenoids.
Further information can also be found on the internet at www.boschrexroth.de/mobilelektronik.

Technical data, proportional valve, sizes 250 to 1000	EP1	EP2
Voltage	12 V (±20%)	24 V (±20%)
Control current		
Start of control at $V_{g\,max}$	900 mA[1)]	450 mA[1)]
End of control at $V_{g\,min}$	approx. 1360 mA	approx. 680 mA
Current limit	2.2 A	1.0 A
Nominal resistance (at 20 °C)	2.4 Ω	12 Ω
Duty cycle	100%	100%
Type of protection: see connector version page 47		
See also proportional pressure reducing valve DRE 4K (data sheet 29281 – proportional pressure reducing valve)		

1) Setting

▼ **Circuit diagram EP1, EP2, size 28**

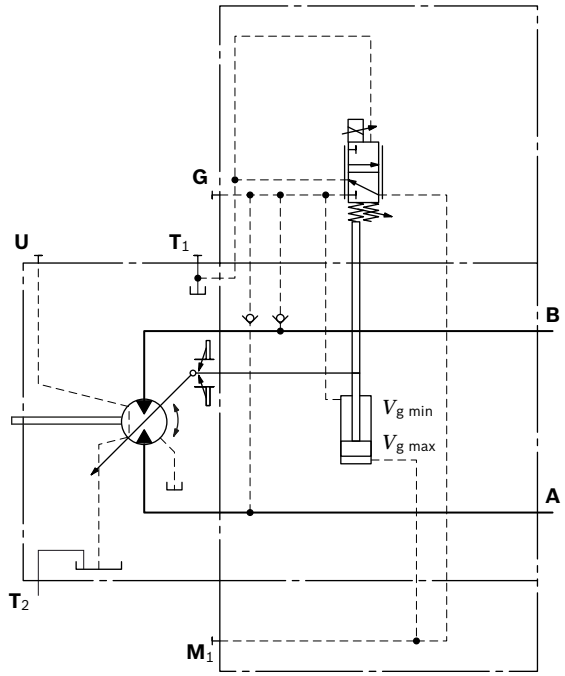

▼ **Circuit diagram EP1, EP2, sizes 250 to 1000**

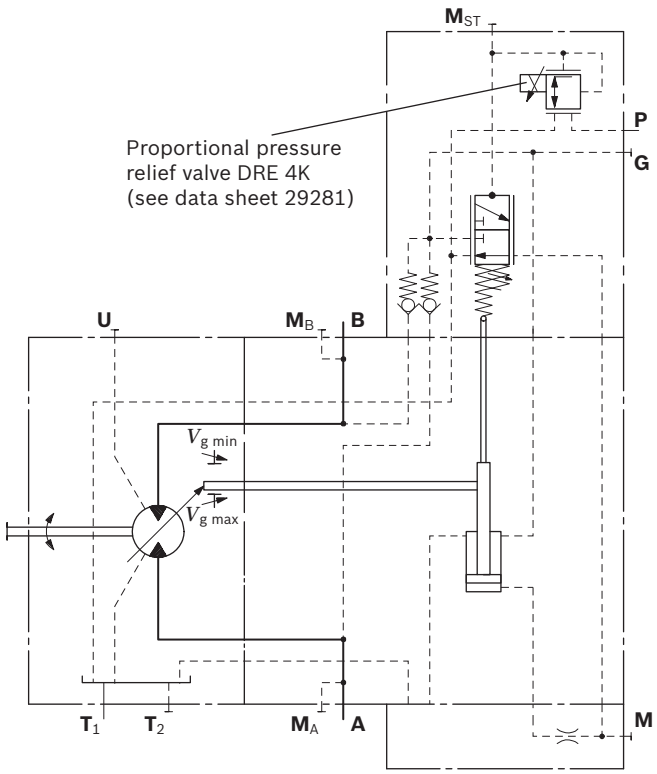

Europe LRE-L 91504/05 2016, Bosch Rexroth AG

247

EP.D pressure control, fixed setting

The pressure control overrides the EP control function.

If the load torque or a reduction in motor swivel angle causes the system pressure to reach the setpoint value of the pressure control, the motor will swivel towards a larger angle.

The increase in displacement and the resulting reduction in pressure cause the control deviation to decrease. With the increase in displacement the motor develops more torque, while the pressure remains constant.

size 28:

Setting range of the pressure control valve 80 to 400 bar

sizes 250 to 1000:

Setting range of the pressure control valve 80 to 350 bar

▼ **Circuit diagram EP.D, size 28**

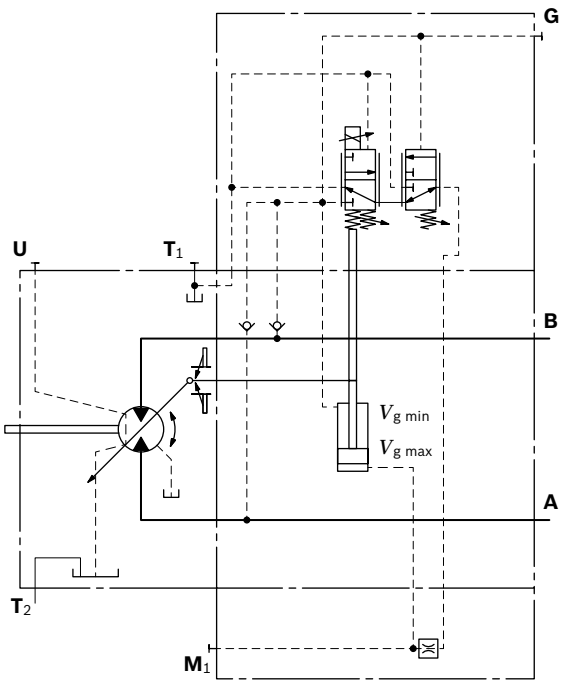

▼ **Circuit diagram EP.D, sizes 250 to 1000**

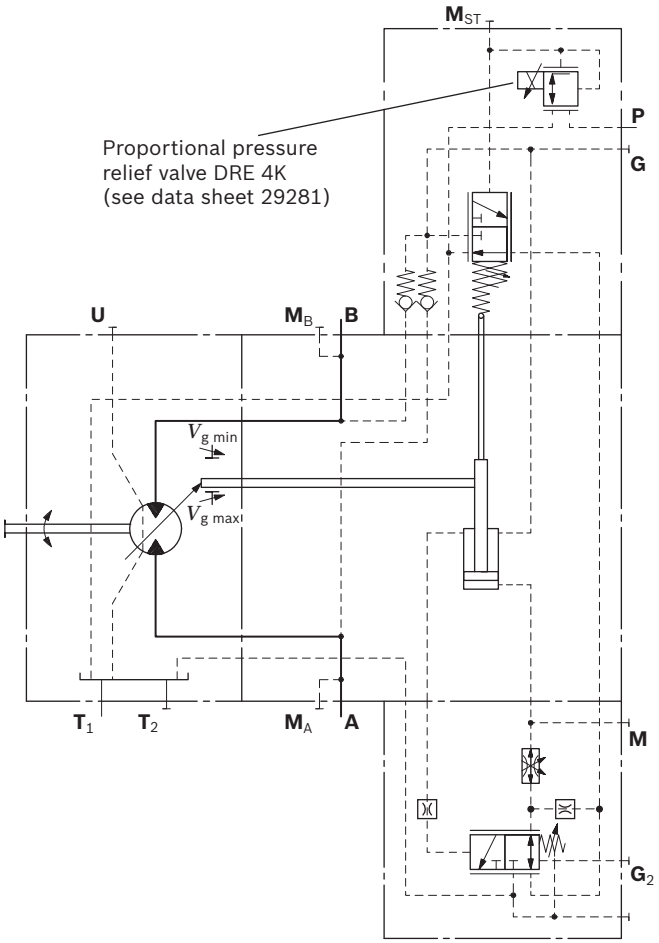

EP.E pressure control, hydraulic override, two-point, size 28

The pressure control setting can be overridden by applying an external pilot pressure at port **G**$_2$, realizing a 2nd pressure setting realized. Necessary pilot pressure at port **G**$_2$:

p_{St} = 20 to 50 bar

When ordering, please specify the 2nd pressure setting in plain text.

▼ **Circuit diagram EP.E**

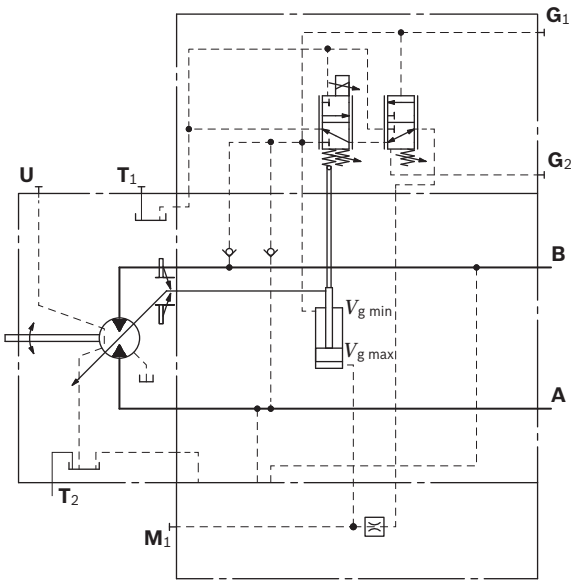

Sizes 250 to 1000 (EP.D)

Pressure control with 2nd pressure setting for EP.D provided as standard (see page 16).

The pressure control setting can be overridden by applying an external pilot pressure at port **G**$_2$, realizing a 2nd pressure setting.

Necessary pilot pressure at port **G**$_2$:

$p_{St} \geq 100$ bar

When ordering, please specify the 2nd pressure setting in plain text.

EP.G pressure control, remote controlled, sizes 250 to 1000

When the pressure command value is reached, the remote controlled pressure control continually regulates the motor to maximum displacement $V_{g\,max}$. A pressure relief valve (not included in the scope of delivery), which is located separately from the motor and which is connected to port **X**$_3$, assumes the task of controlling the internal pressure cut-off valve. So long as the pressure command value has not been reached, pressure is evenly applied to the valve from both sides in addition to the spring force, and the valve remains closed. The pressure command value is between 80 bar and 350 bar. When the pressure command value is reached at the separate pressure-relief valve, this will open, reliving the pressure on the spring side to the reservoir. The internal control valve switches and the motor swivels to maximum displacement $V_{g\,max}$.

The differential pressure at the DRG control valve is set as standard to 25 bar. As a separate pressure relief valve, we recommend: DBD 6 (hydraulic) as per data sheet 25402; maximum line length should not exceed 2 m.

▼ **Circuit diagram EP.G**

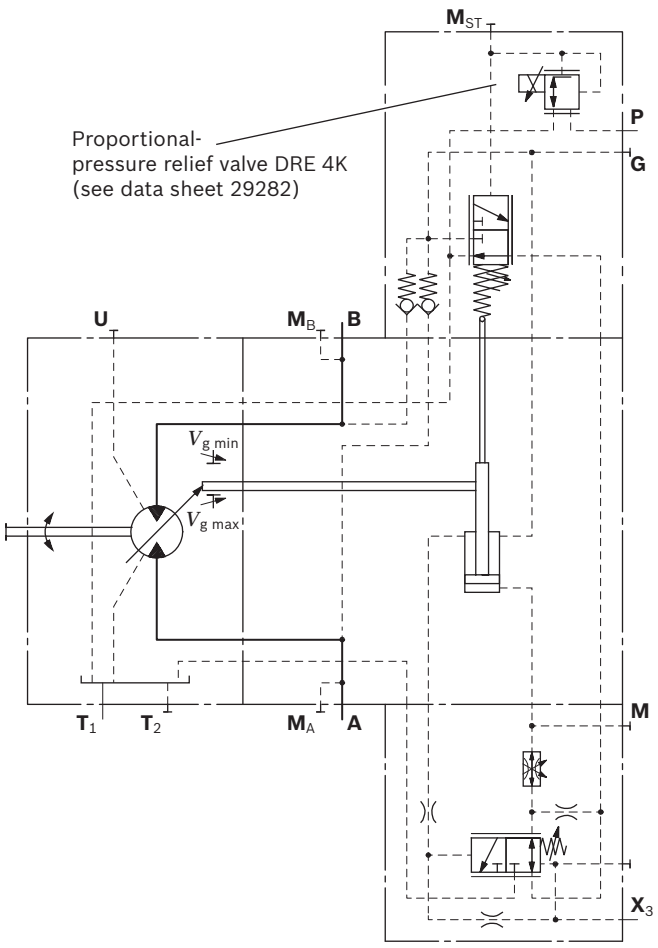

HZ – Two-point control, hydraulic

The two-point hydraulic control allows the displacement to be set to either $V_{g\,min}$ or $V_{g\,max}$ by switching the pilot pressure at port **X** on or off.

- Position at $V_{g\,max}$ (without pilot pressure, maximum torque, minimum rotational speed)
- Position at $V_{g\,min}$ (with pilot pressure > 15 bar for size 28 and 10 bar for sizes 250 to 1000 switched on, minimum torque, maximum permissible rotational speed)

▼ **Characteristic curve**

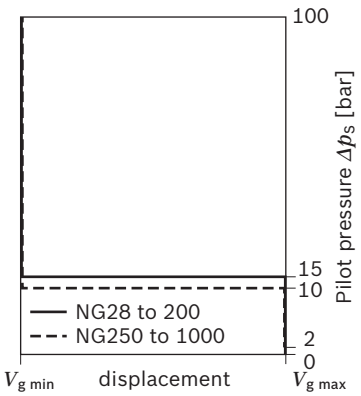

Notice

- Maximum permissible pilot pressure: 100 bar
- The control oil is internally taken out of the high pressure side of the motor (**A** or **B**). For reliable control, a working pressure of at least 30 bar is necessary in **A** (**B**). If a control operation is performed at a working pressure < 30 bar, an auxiliary pressure of at least 30 bar must be applied at port **G** using an external check valve. For lower pressures, please contact us. Please note that at port **G** up to 450 bar (size 28) or 400 bar (sizes 250 to 1000) can occur.
- A leakage flow of maximum 0.3 l/min can occur at port **X** due to internal leakage (working pressure > pilot pressure). The control is to be suitably configured to avoid an independent build-up of pilot pressure.

Response time damping

The response time damping impacts the pivot behavior of the motor and consequently the machine response speed.

Standard for sizes 28, 140 to 200

HZ1 with throttle pin on both sides, symmetrical (see table)

▼ **Throttle pin overview**

Size	28
Groove size [mm]	0.30

Standard for sizes 250 to 1000 with orifice (ø1.2 mm)

▼ **Circuit diagram HZ1, size 28**

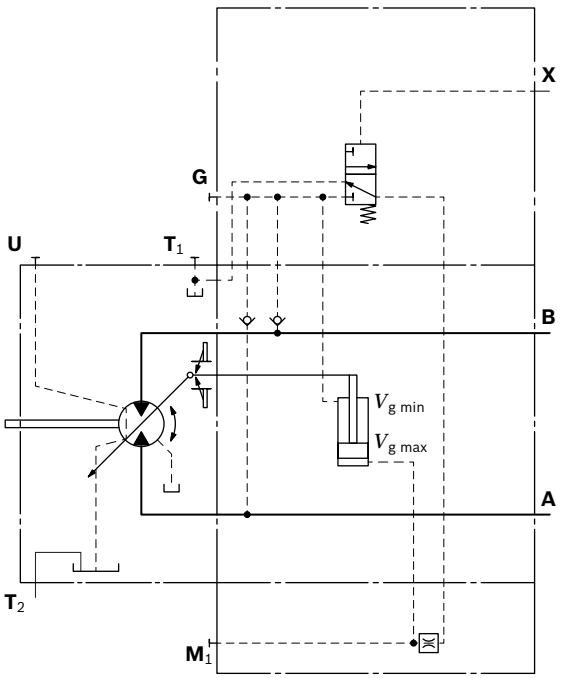

▼ **Circuit diagram HZ, sizes 250 to 1000**

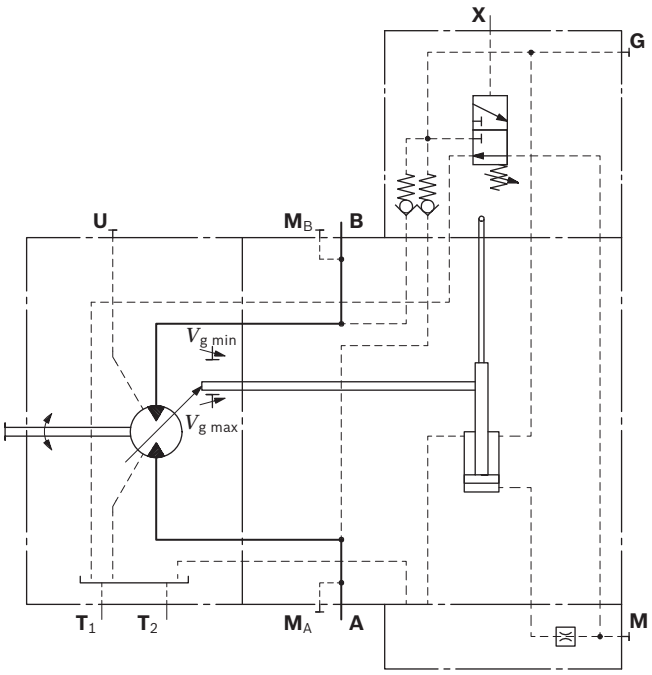

EZ – Two-point control, electric

The two-point electric control allows the displacement to be set to either $V_{g\,min}$ or $V_{g\,max}$ by switching the electric current on or off to a switching solenoid (size 28) or to an on/off valve (sizes 250 to 1000).

Notice
The control oil is internally taken out of the high pressure side of the motor (**A** or **B**). For reliable control, a working pressure of at least 30 bar is necessary in **A** (**B**). If a control operation is performed at a working pressure < 30 bar, an auxiliary pressure of at least 30 bar must be applied at port **G** using an external check valve. For lower pressures, please contact us.
Please note that at port **G** up to 450 bar (size 28) or 400 bar (sizes 250 to 1000) can occur.

Response time damping
The response time damping impacts the pivot behavior of the motor and consequently the machine response speed.
Standard for sizes 28
EZ1, EZ2 with throttle pin on both sides, symmetrical (see table)

▼ **Throttle pin overview**

Size	28	55	80	107	140	160	200
Groove size [mm]	0.30	0.30	0.30	0.30	0.55	0.55	0.65

Standard for sizes 250 to 1000 with orifice (ø1.2 mm)

Technical data, solenoid with ø37, sizes 28	EZ1	EZ2
Voltage	12 V (±20%)	24 V (±20%)
Position $V_{g\,max}$	de-energized	de-energized
Position $V_{g\,min}$	energized	energized
Nominal resistance (at 20 °C)	5.5 Ω	21.7 Ω
Nominal power	26.2 W	26.5 W
Minimum active current required	1.32 A	0.67 A
Duty cycle	100%	100%
Type of protection: see connector version page 47		

▼ **Circuit diagram EZ1, EZ2, size 28**

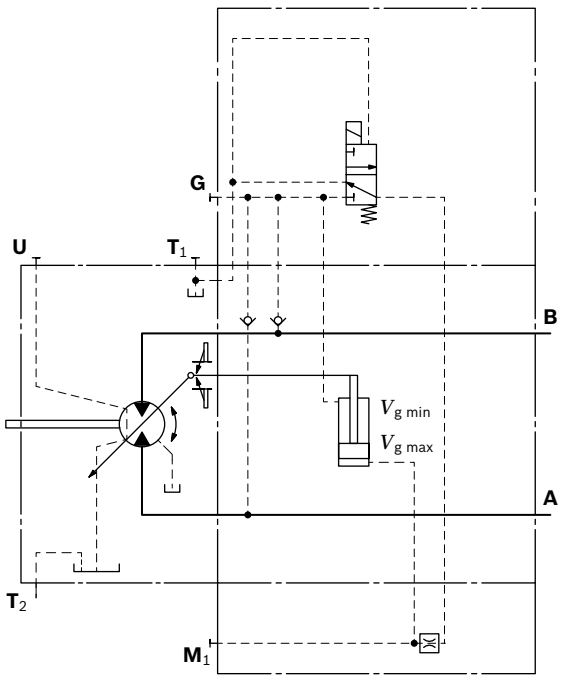

EZ – Two-point control, electric

Technical data, on/off valve, sizes 250 to 1000	EZ1	EZ2
Voltage	12 V (±20%)	24 V (±20%)
Position $V_{g\,max}$	de-energized	de-energized
Position $V_{g\,min}$	energized	energized
Nominal resistance (at 20 °C)	6 Ω	23 Ω
Nominal power	26 W	26 W
Minimum active current required	2 A	1.04 A
Duty cycle	100%	100%
Type of protection: see connector version page 47		

▼ **Circuit diagram EZ1, EZ2, sizes 250 to 1000**

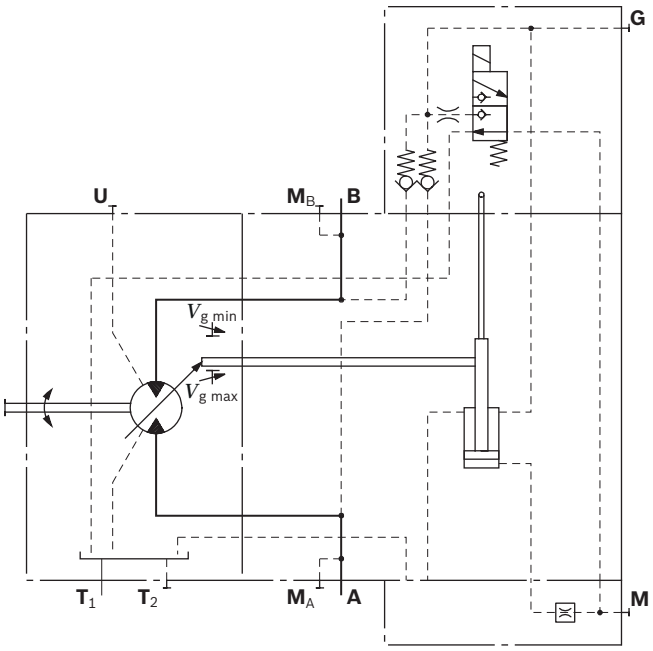

HA – Automatic high-pressure related control

The automatic high-pressure related control adjusts the displacement automatically depending on the working pressure.
The displacement of the A6VM motor with HA control is $V_{g\,min}$ (maximum rotational speed and minimum torque). The control device measures internally the working pressure at **A** or **B** (no control line required) and upon reaching the set beginning of control, the controller swivels the motor with increasing pressure from $V_{g\,min}$ to $V_{g\,max}$. The displacement is modulated between $V_{g\,min}$ and $V_{g\,max}$ depending on the load.

HA1, HA2

- Beginning of control at $V_{g\,min}$ (minimum torque, maximum rotational speed)
- End of control at $V_{g\,max}$ (maximum torque, minimum rotational speed)

Notice

- For safety reasons, winch drives are not permissible with beginning of control at $V_{g\,min}$ (standard for HA).
- The control oil is internally taken out of the high pressure side of the motor (**A** or **B**). For reliable control, a working pressure of at least 30 bar is necessary in **A** (**B**). If a control operation is performed at a working pressure < 30 bar, an auxiliary pressure of at least 30 bar must be applied at port **G** using an external check valve. For lower pressures, please contact us. Please note that at port **G** up to Please note that at port **G** up to 450 bar (size 28) or 400 bar (sizes 250 to 1000) can occur.
- The beginning of control and the HA characteristic curve are influenced by the case pressure. An increase in the case pressure causes an increase in the beginning of control (see page 6) and thus a parallel displacement of the characteristic curve. Only for HA1T (size 28) and for HA1, HA2 and HA.T (sizes 250 to 1000).
- A leakage flow of maximum 0.3 l/min occurs at port X (working pressure > pilot pressure). To avoid a build-up of pilot pressure, pressure must to be relieved from port X to the reservoir. **Only for HA.T control.**

Response time damping
The response time damping impacts the pivot behavior of the motor and consequently the machine response speed.
Standard for size 28
HA with throttle pin on one side, throttle from $V_{g\,min}$ to $V_{g\,max}$. (see table)

▼ **Throttle pin overview**

Size	28
Groove size [mm]	0.3

Standard for sizes 250 to 1000 with orifice (ø1.2 mm)

HA1 with minimum pressure increase, positive control

A working pressure increase of Δp ≤ approx. 10 bar results in an increase in displacement from $V_{g\,min}$ to $V_{g\,max}$.

Size 28:

Setting range of the pressure control valve 80 to 350 bar

Sizes 250 to 1000:

Setting range of the pressure control valve 80 to 340 bar

Please state the desired beginning of control in plain text when ordering, e.g.: beginning of control at 300 bar.

▼ **Characteristic curve HA1**

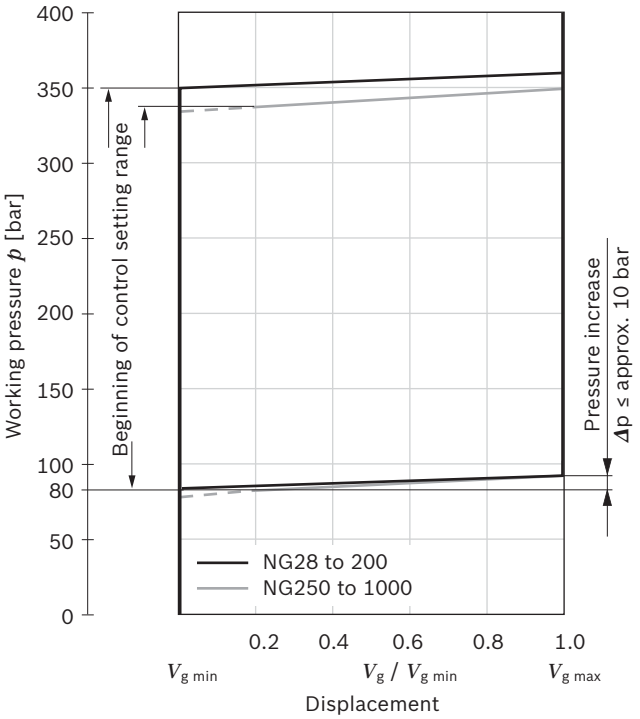

▼ **Circuit diagram HA1, size 28**

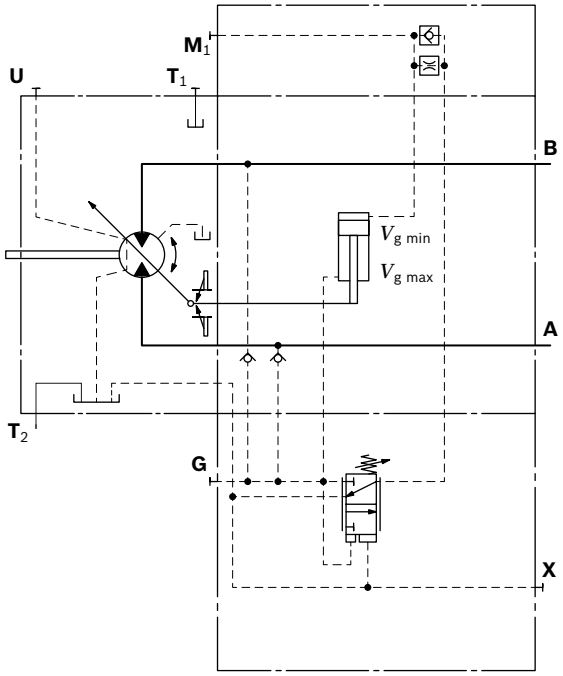

▼ **Circuit diagram HA1, sizes 250 to 1000**

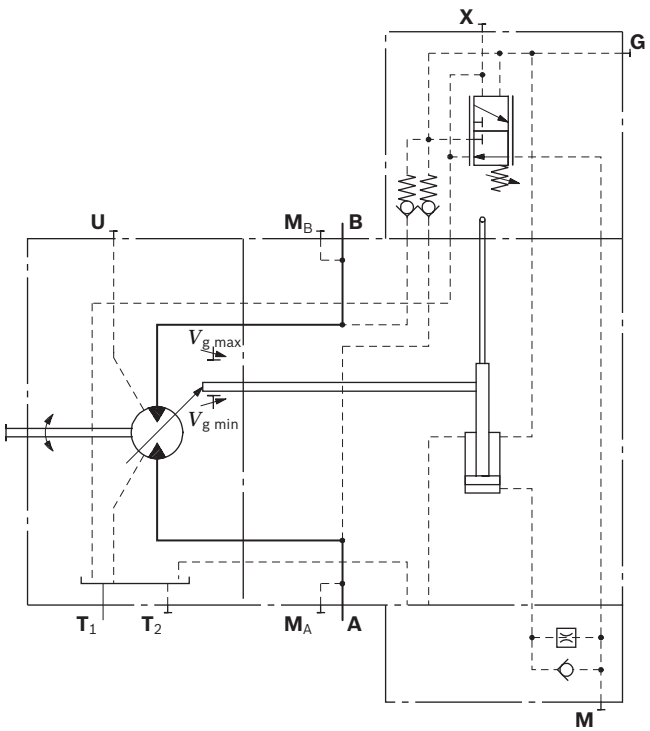

Europe | RE-L 91304/05 2016, Bosch Rexroth AG

255

HA2 with pressure increase, positive control

A working pressure increase of Δp ≤ approx. 100 bar results in an increase in displacement from $V_{g\,min}$ to $V_{g\,max}$.

Size 28:

Setting range of the pressure control valve 80 to 350 bar

Sizes 250 to 1000:

Setting range of the pressure control valve 80 to 250 bar

Please state the desired beginning of control in plain text when ordering, e.g.: beginning of control at 200 bar.

▼ **Characteristic curve HA2**

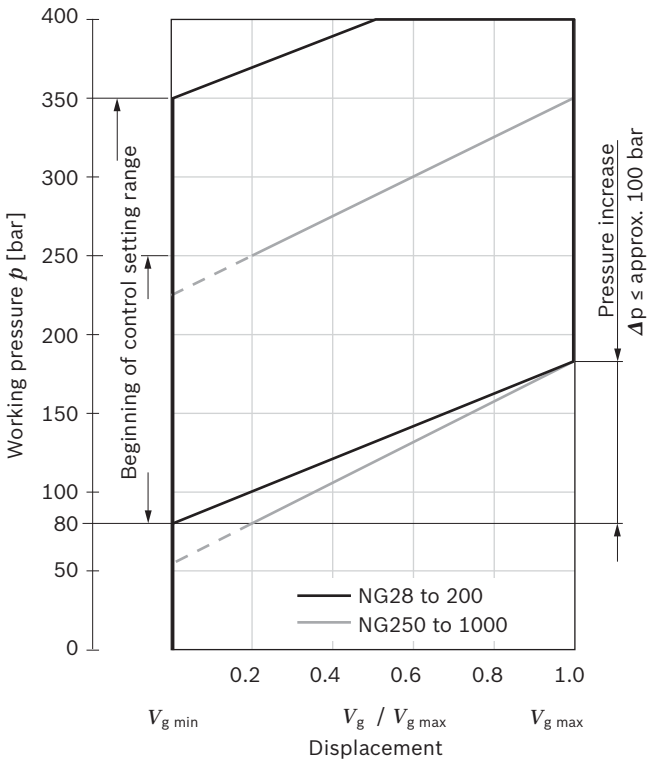

▼ **Circuit diagram HA2, size 28**

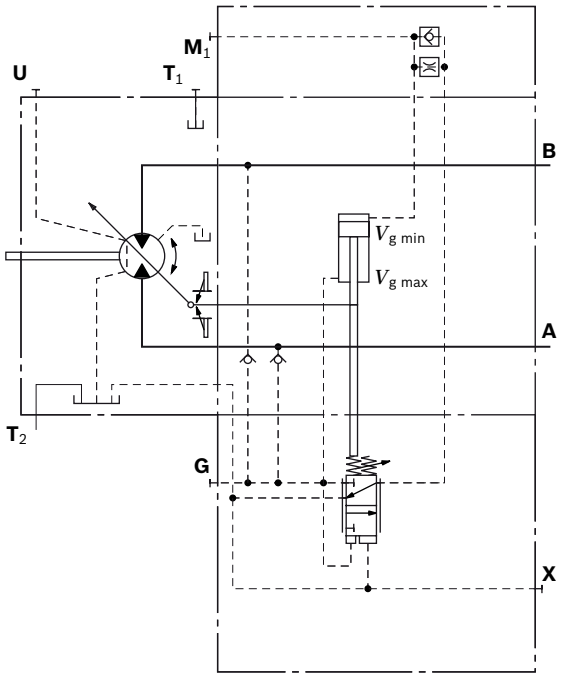

▼ **Circuit diagram HA2, sizes 250 to 1000**

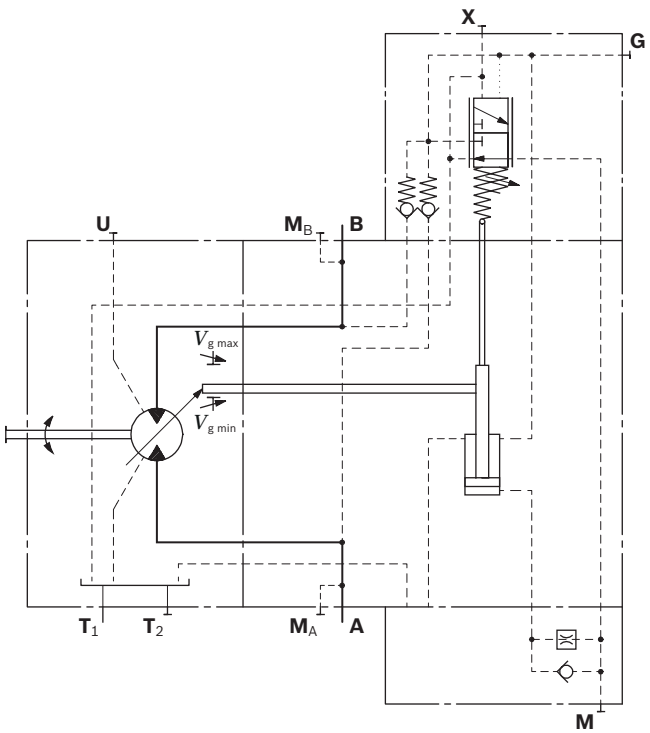

HA.T Hydraulic override, remote control, proportional

With the HA.T3 control, the beginning of control can be influenced by applying a pilot pressure to port **X**.
For every 1 bar of pilot pressure, the beginning of control is reduced by 17 bar (size 28) or 9 bar (sizes 250 to 1000).

Example (size 28):

Settings for the beginning of control	300 bar	300 bar
Pilot pressure at port **X**	0 bar	10 bar
Beginning of control at	300 bar	130 bar

Notice

Maximum permissible pilot pressure 100 bar.

▼ **Circuit diagram HA1T, size 28**

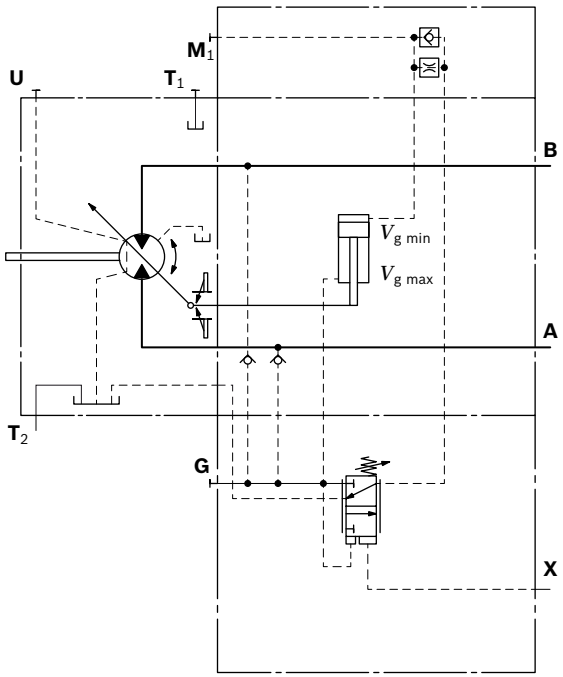

▼ **Circuit diagram HA1T, sizes 250 to 1000**

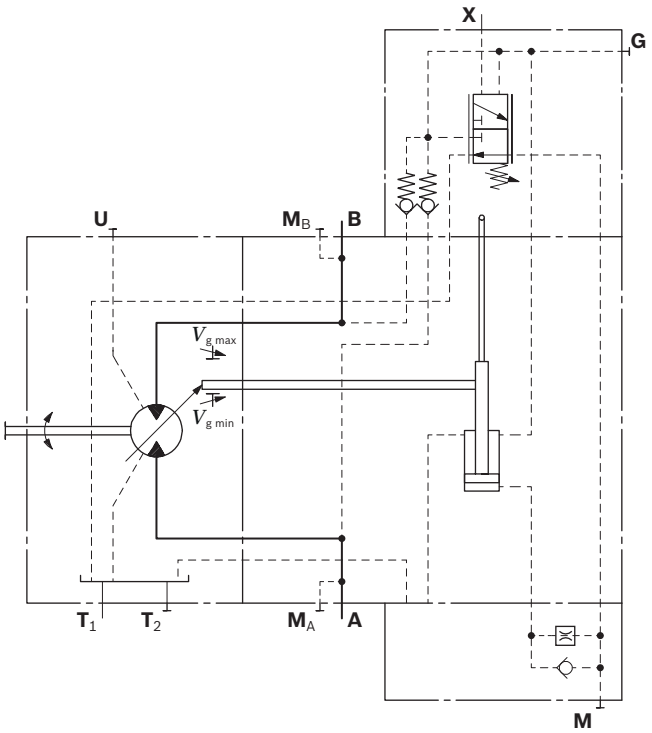

▼ **Circuit diagram HA2T, size 28**

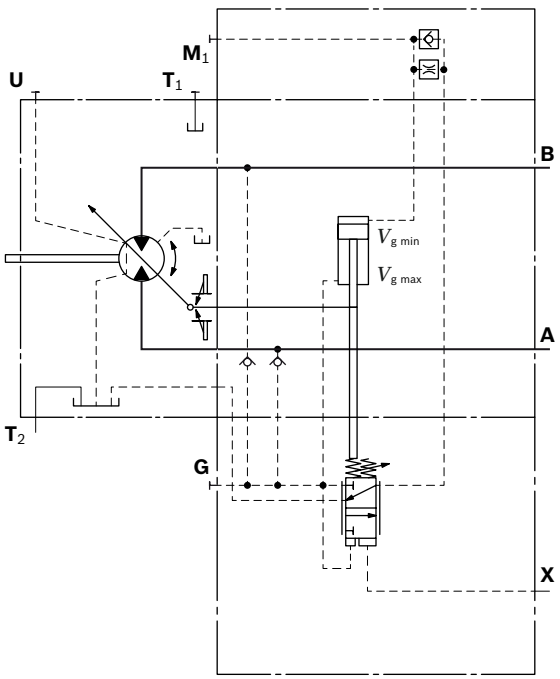

Europe | RE-L 91304/05 2016, Bosch Rexroth AG

257

HA.U1, HA.U2 electric override, two-point, size 28

With the HA.U1 or HA.U2 control, the beginning of control can be overridden by an electric signal to a switching solenoid. When the override solenoid is energized, the variable motor swivels to maximum swivel angle, without intermediate position.

The beginning of control can be set between 80 and 300 bar (specify required setting in plain text when ordering).

Technical data, solenoid with Ø45	U1	U2
Voltage	12 V (±20%)	24 V (±20%)
No override	de-energized	de-energized
Position $V_{g\,max}$	energized	energized
Nominal resistance (at 20 °C)	4.8 Ω	19.2 Ω
Nominal power	30 W	30 W
Minimum active current required	1.5 A	0.75 A
Duty cycle	100%	100%
Type of protection: see connector version page 47		

▼ **Circuit diagram HA1.U1, HA1.U2**

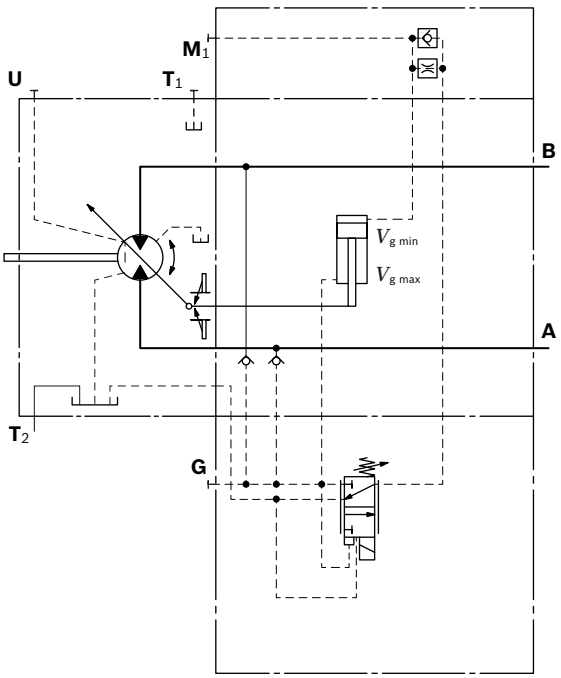

▼ **Circuit diagram HA2.U1, HA2.U2**

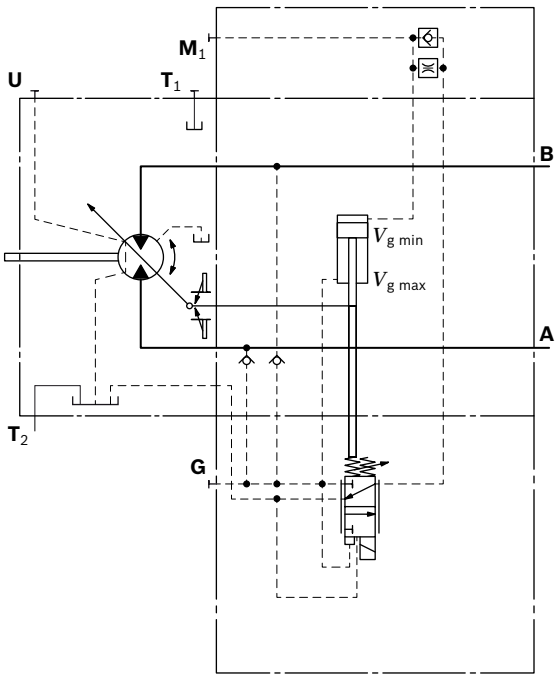

HA.R1, HA.R2 electric override, travel direction valve electric, size 28

With the HA.R1 or HA.R2 control, the beginning of control can be overridden by an electric signal to switching solenoid **b**. When the override solenoid is energized, the variable motor swivels to maximum swivel angle, without intermediate position.

The travel direction valve ensures that the preselected pressure side of the hydraulic motor (**A** or **B**) is always connected to the HA control, and thus determines the swivel angle, even if the high-pressure side changes (e.g. -travel drive during a downhill operation). This thereby prevents undesired swiveling of the variable motor to a larger displacement (jerky deceleration and/or braking characteristics).

Depending on the direction of rotation (direction of travel), the travel direction valve is actuated through the compression spring or the switching solenoid **a** (see page 30).

Electric override

Technical data, solenoid b with ø45	R1	R2
Voltage	12 V (±20%)	24 V (±20%)
No override	de-energized	de-energized
Position $V_{g\,max}$	energized	energized
Nominal resistance (at 20 °C)	4.8 Ω	19.2 Ω
Nominal power	30 W	30 W
Minimum active current required	1.5 A	0.75 A
Duty cycle	100%	100%
Type of protection: see connector version page 47		

Travel direction valve, electric

Technical data, solenoid a with ø37		R1	R2
Voltage		12 V (±20%)	24 V (±20%)
Direction of rotation	Working pressure in		
counter-clockwise	**B**	energized	energized
clockwise	**A**	de-energized	de-energized
Nominal resistance (at 20 °C)		5.5 Ω	21.7 Ω
Nominal power		26.2 W	26.5 W
Minimum active current required		1.32 A	0.67 A
Duty cycle		100%	100%
Type of protection: see connector version page 47			

▼ **Circuit diagram HA1.R1, HA1.R2**

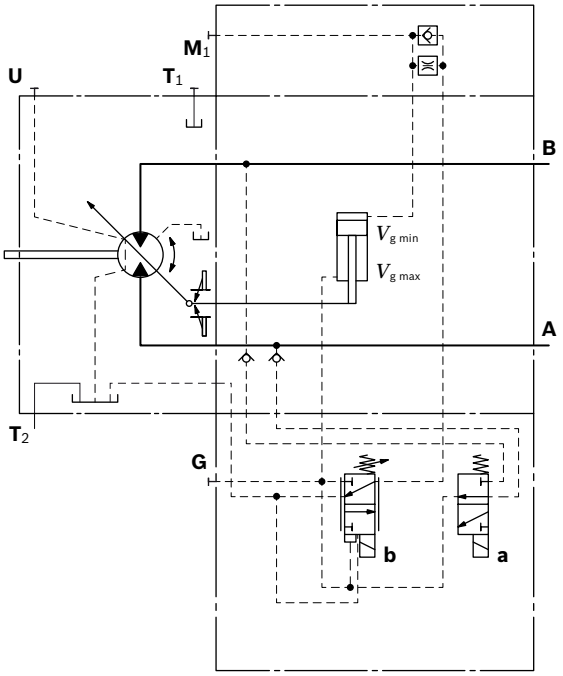

▼ **Circuit diagram HA2.R1, HA2.R2**

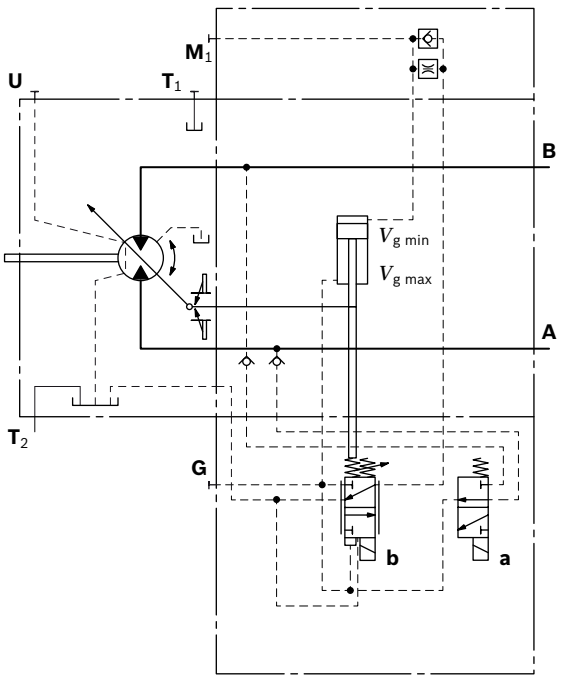

Europe | RE-L 91304/05 2016, Bosch Rexroth AG

259

DA – Automatic control, speed related

The variable motor A6VM with automatic speed-related control is intended for use in hydrostatic travel drives in combination with the variable pump A4VG with DA control. A drive speed-related pilot pressure signal is generated by the A4VG variable pump, and that signal, together with the working pressure, regulates the swivel angle of the hydraulic motor.
Increasing drive speed, i.e. increasing pilot pressure, causes the motor to swivel to a smaller displacement (lower torque, higher rotational speed), depending on the working pressure.
If the working pressure exceeds the pressure command value of the controller, the variable motor swivels to a larger displacement (higher torque, lower rotational speed).

- Pressure ratio p_{St}/p_{HD} = 3/100, 5/100, 8/100

DA control is only suitable for certain types of travel drive systems and requires review of the engine and vehicle parameters to ensure that the motor is used correctly and that machine operation is safe and efficient. We recommend that all DA applications be reviewed by a Bosch Rexroth application engineer.
Our Sales department will provide you detailed information.

Notice
The beginning of control and the DA characteristic curve are influenced by case pressure. An increase in the case pressure causes a decrease / reduction in the beginning of control (see page 6) and thus a parallel displacement of the characteristic curve.

Response time damping
The response time damping impacts the pivot behavior of the motor and consequently the machine response speed.
Standard for size 28
DA with throttle pin on one side, throttle from $V_{g\,min}$ to $V_{g\,max}$. (see table)

▼ **Throttle pin overview**

Size	28
Groove size [mm]	0.30

Standard for sizes 250 to 1000 with orifice (ø1.2 mm)

DA, DA1, DA4 hydraulic travel direction valve,
Dependent on the direction of rotation (travel direction), the travel direction valve is switched by using pilot pressures **X**$_1$ or **X**$_2$. The maximum permissible pilot pressure for sizes 250 to 1000 is p_{st} = 25 bar. Momentary (t < 0.1 s) pressure peaks of up to 40 bar are permitted.

Direction of rotation	Working pressure in	Pilot pressure in
clockwise	**A**	**X**$_1$
counter-clockwise	**B**	**X**$_2$

▼ **Circuit diagram DA1, DA4, size 28**

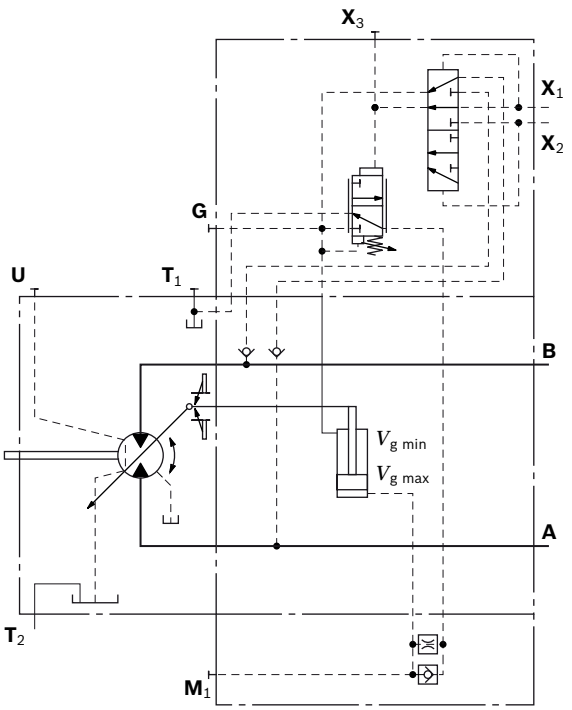

▼ **Circuit diagram DA, sizes 250 to 1000**

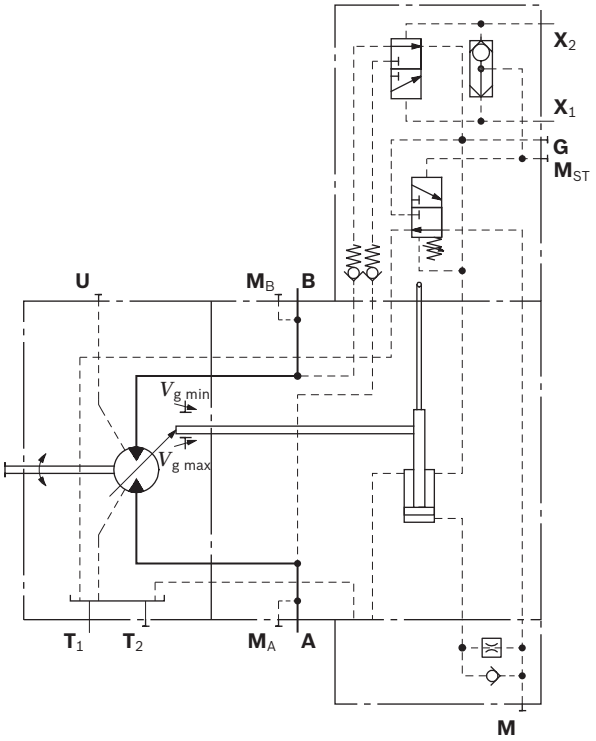

DA2, DA3, DA5, DA6 electric travel direction valve + electric $V_{g\,max}$-circuit, size 28

Depending on the direction of rotation (direction of travel), the travel direction valve is actuated through the compression spring or the switching solenoid **a**.
When switching solenoid **b** is energized, the control can be overridden and the motor can be swiveled to maximum displacement (high torque, lower rotational speed) (electric $V_{g\,max}$-circuit).

Travel direction valve, electric

Technical data, solenoid a with ø37		DA2, DA5	DA3, DA6
Voltage		12 V (±20%)	24 V (±20%)
Direction of rotation	Working pressure in		
counter-clockwise	**B**	de-energized	de-energized
clockwise	**A**	energized	energized
Nominal resistance (at 20 °C)		5.5 Ω	21.7 Ω
Nominal power		26.2 W	26.5 W
Minimum active current required		1.32 A	0.67 A
Duty cycle		100%	100%
Type of protection: see connector version page 47			

Electric override

Technical data, solenoid b with ø37	DA2, DA5	DA3, DA6
Voltage	12 V (±20%)	24 V (±20%)
No override	de-energized	de-energized
Position $V_{g\,max}$	energized	energized
Nominal resistance (at 20 °C)	5.5 Ω	21.7 Ω
Nominal power	26.2 W	26.5 W
Minimum active current required	1.32 A	0.67 A
Duty cycle	100%	100%
Type of protection: see connector version page 47		

▼ **Circuit diagram DA2, DA3, DA5, DA6, size 28**

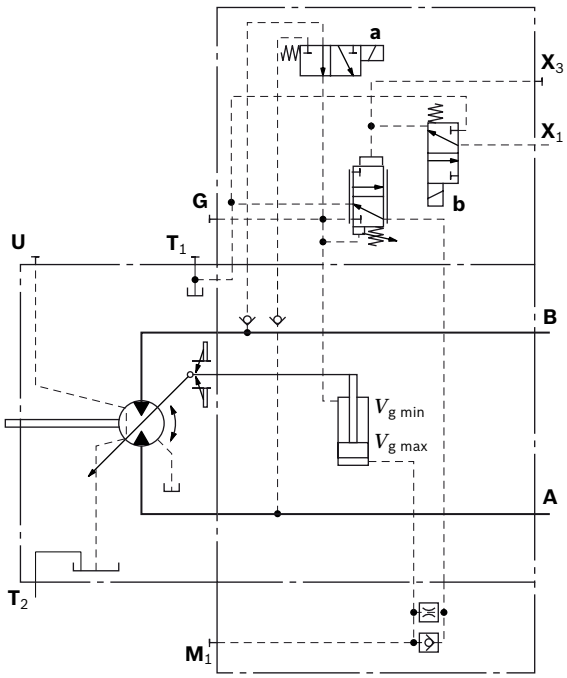

Electric travel direction valve (for DA, HA.R)

Application in travel drives in closed circuits. The travel direction valve of the motor is actuated by an electric signal that also switches the swivel direction of the travel drive pump (e.g. A4VG with DA control valve).
If the pump in the closed circuit is switched to the neutral position or into reverse, the vehicle may experience jerky deceleration or braking, depending on the vehicle weight and current travel speed.
When the travel direction valve, which must be logically coordinated with the pump control, of the pump (e.g. 4/3-way directional valve of the DA-control) is switched to

- the neutral position,
  the electrical circuitry causes the previous signal on the travel direction valve on the motor to be retained.
- Reversing,
  the electrical circuitry causes the travel direction valve of the motor to switch to the other travel direction following a time delay (approx. 0.8 s) with respect to the pump.

As a result, jerky deceleration or braking is prevented in both cases.

▼ **Circuit diagram, electric travel direction valve**

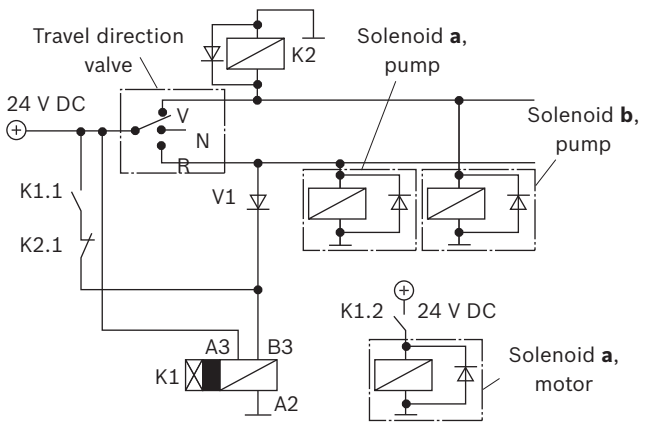

Notice
The shown diodes and relays are not included in the scope of delivery of the motor.

▼ **Control, DA2, DA3, DA5, DA6**

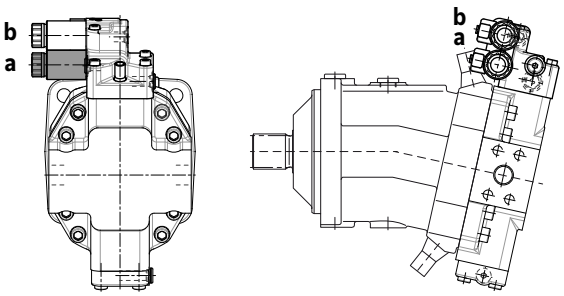

▼ **Control, HA1R., HA2R.**

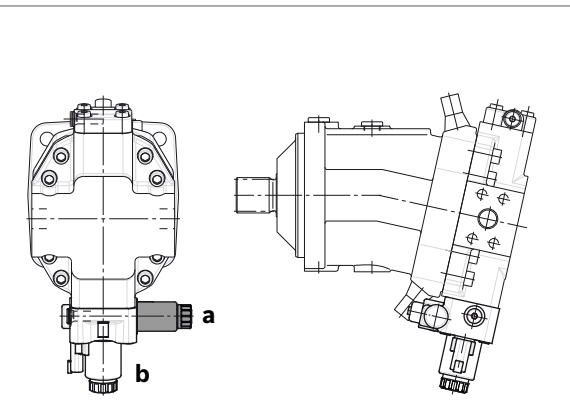

Switching solenoid **a** on travel direction valve

Dimensions, sizes 28

EP1, EP2 – Proportional control, electric

Port plate 2 — SAE working ports **A** and **B** lateral, opposing

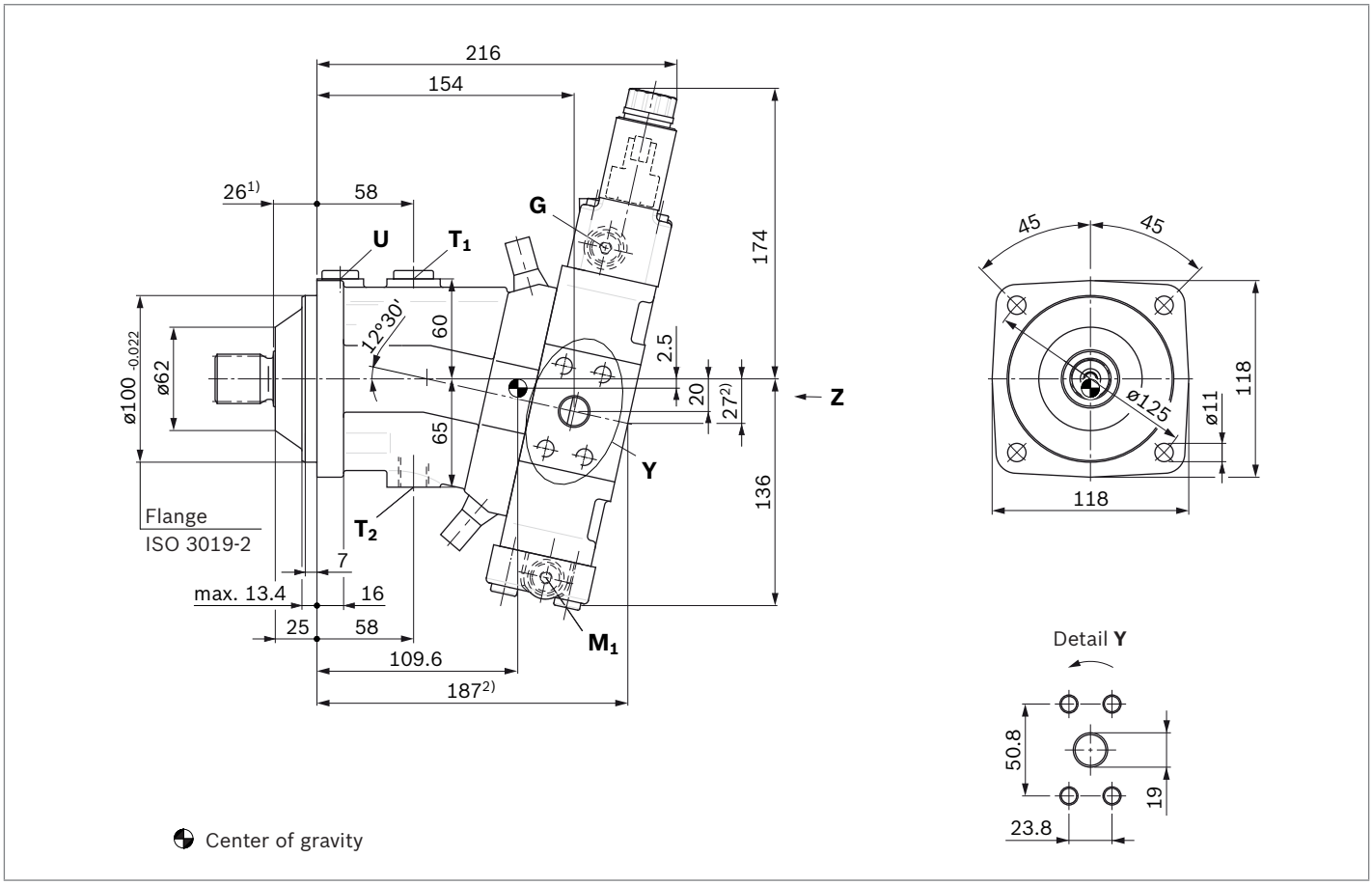

Ports		Standard	Size[3)]	$p_{max\ abs}$ [bar][4)]	State[8)]
A, B	Working port Fastening thread	SAE J518[5)] DIN 13	3/4 in M10 × 1.5; 17 deep	450	O
T_1	Drain port	DIN 3852[7)]	M18 × 1.5; 12 deep	3	X[6)]
T_2	Drain port	DIN 3852[7)]	M18 × 1.5; 12 deep	3	O[6)]
G	Synchronous control	DIN 3852[7)]	M14 × 1.5; 12 deep	450	X
G_2	2nd pressure setting (HD.E, EP.E)	DIN 3852[7)]	M14 × 1.5; 12 deep	100	X
U	Bearing flushing	DIN 3852[7)]	M16 × 1.5; 12 deep	3	X
X	Pilot signal (HD, HZ, HA1T/HA2T)	DIN 3852[7)]	M14 × 1.5; 12 deep	100	O
X	Pilot signal (HA1, HA2)	DIN 3852[7)]	M14 × 1.5; 12 deep	3	X
X_1, X_2	Pilot signal (DA1, DA4)	DIN 2353-CL	8B-ST	40	O
X_1	Pilot signal (DA2, DA3, DA5, DA6)	DIN 3852[7)]	M14 × 1.5; 12 deep	40	O
X_3	Pilot signal (DA2, DA3, DA5, DA6)	DIN 3852[7)]	M14 × 1.5; 12 deep	40	X
M_1	Stroking chamber measurement	DIN 3852[7)]	M14 × 1.5; 12 deep	450	X

1) To shaft collar
2) Port plate 1 — SAE working ports **A** and **B** at rear
3) For notes on tightening torques, see the instruction manual
4) Depending on the application, momentary pressure peaks can occur. Keep this in mind when selecting measuring devices and fittings.
5) Only dimensions according to SAE J518, metric fastening thread is a deviation from the standard
6) Depending on installation position, **T_1** or **T_2** must be connected (see also installation instructions on page 52).
7) The countersink can be deeper than as specified in the standard.
8) O = Must be connected (plugged when delivered)
X = Plugged (in normal operation)

▼ **Location of the working ports on the port plates** (view **Z**)

2 SAE working ports **A** and **B** lateral, opposite

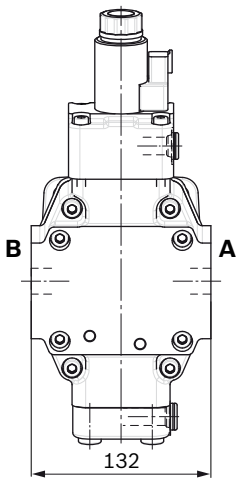

1 SAE working ports **A** and **B** at rear

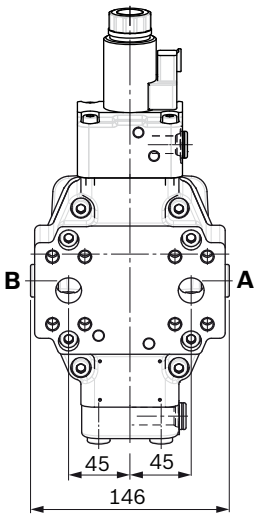

▼ **Splined shaft DIN 5480**

A – W30×2×14×9g

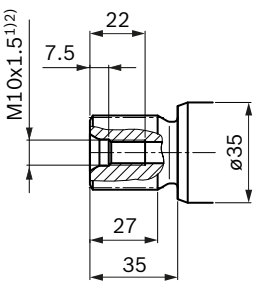

▼ **Splined shaft DIN 5480**

Z – W25×1.25×18×9g

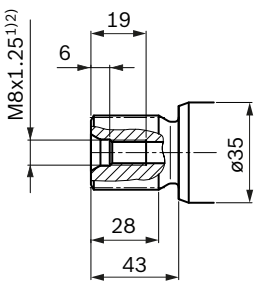

1) For notes on tightening torques, see the instruction manual
2) Center bore according to DIN 332 (thread according to DIN 13)

▼ **EP.D** – Proportional control, electric, with pressure control fixed setting

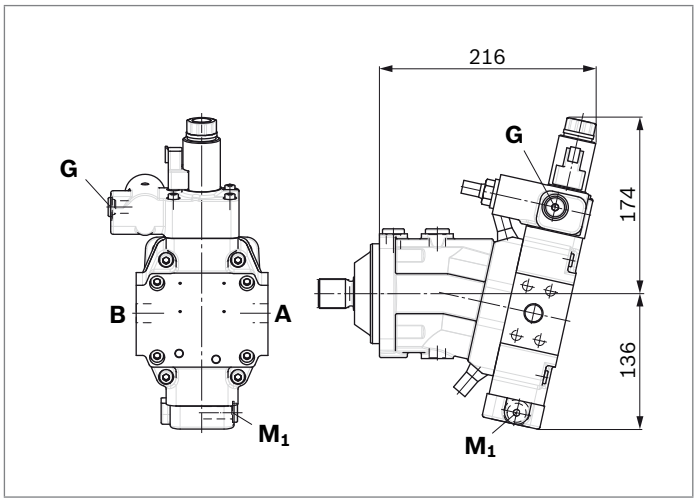

▼ **EP.E** – Proportional control, electric, with pressure control hydraulic override, two-point

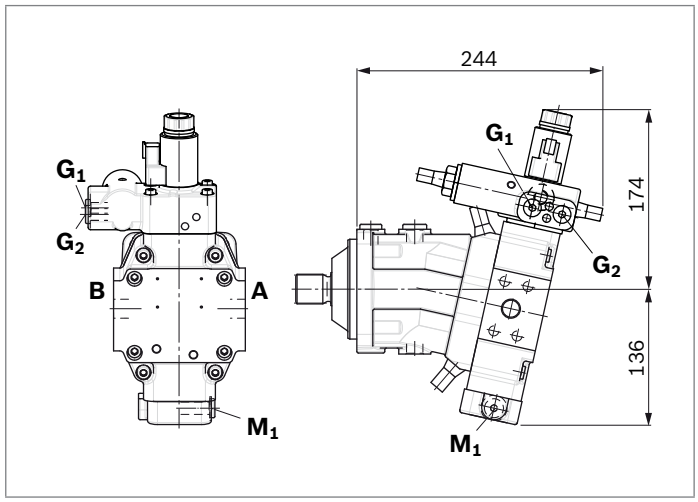

▼ **HD1, HD2** – Proportional control, hydraulic

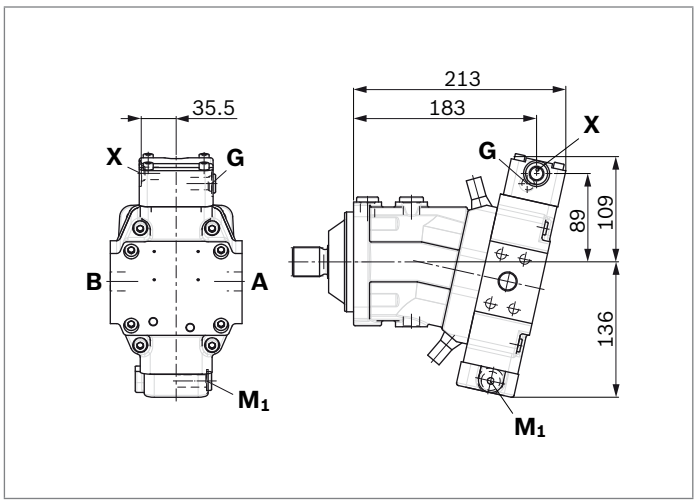

▼ **HD.D** – Proportional control, hydraulic, with pressure control fixed setting

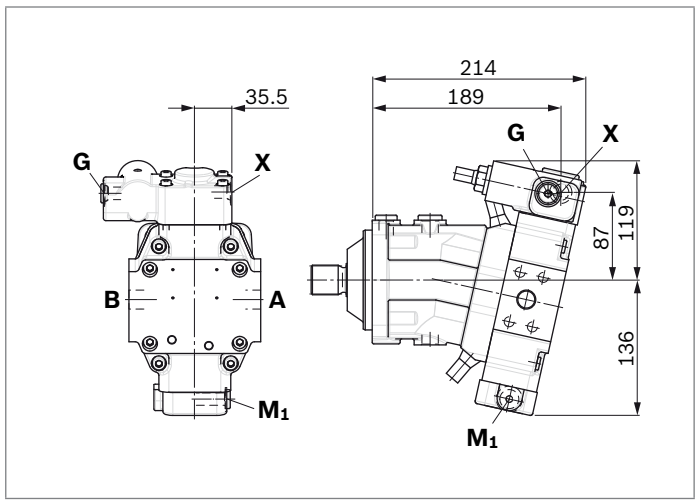

▼ **HD.E** – Proportional control, hydraulic, with pressure control hydraulic override, two-point

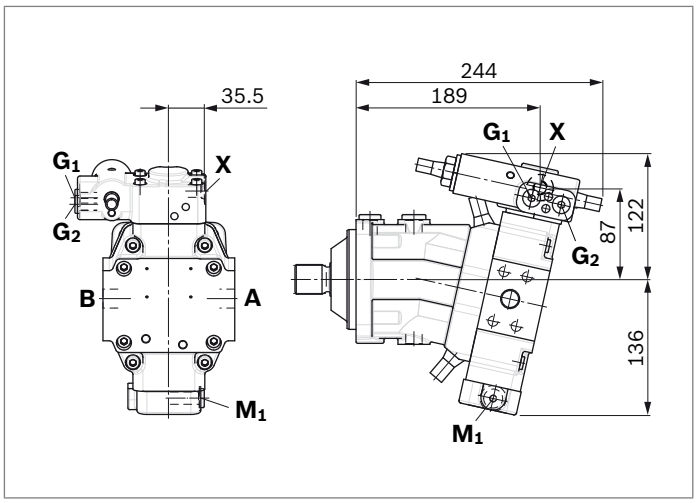

▼ **HZ1** – Two-point control, hydraulic

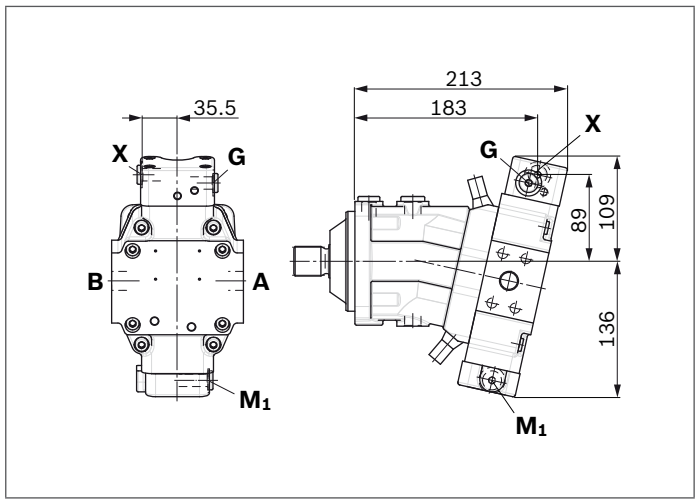

▼ **EZ1, EZ2** – Two-point control, electric

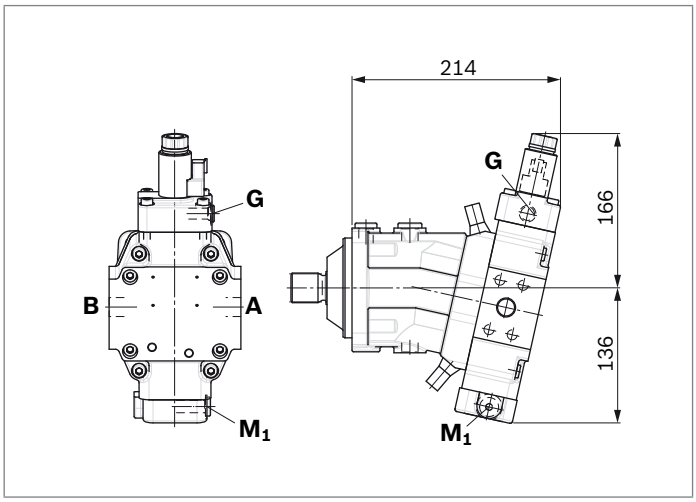

▼ **HA1, HA2 / HA1T, HA2T** – Automatic high-pressure related control, with override, hydraulic remote control, proportional

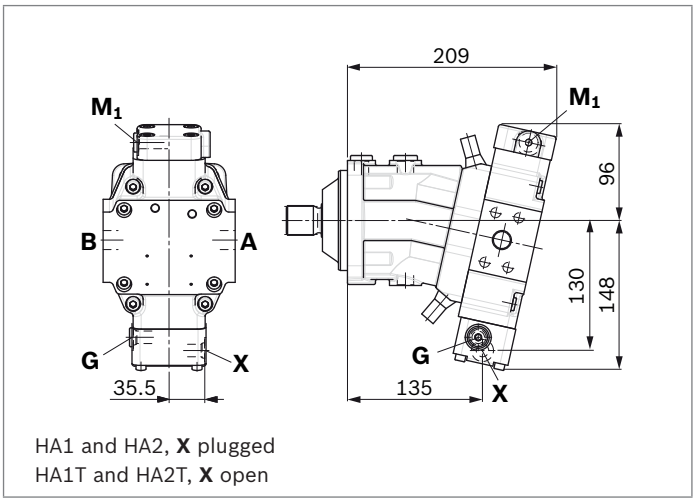

HA1 and HA2, **X** plugged
HA1T and HA2T, **X** open

▼ **HA1U1, HA2U2** – Automatic high-pressure related control, with electric override, two-point

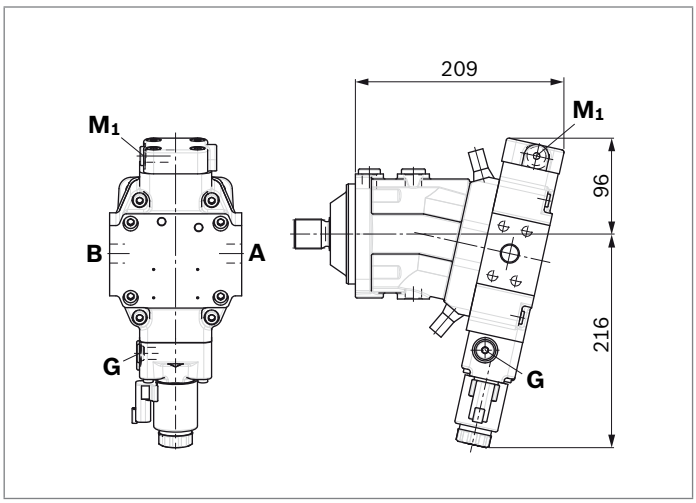

▼ **HA1R1, HA2R2** – Automatic high-pressure related control, with electric override and electric travel direction valve

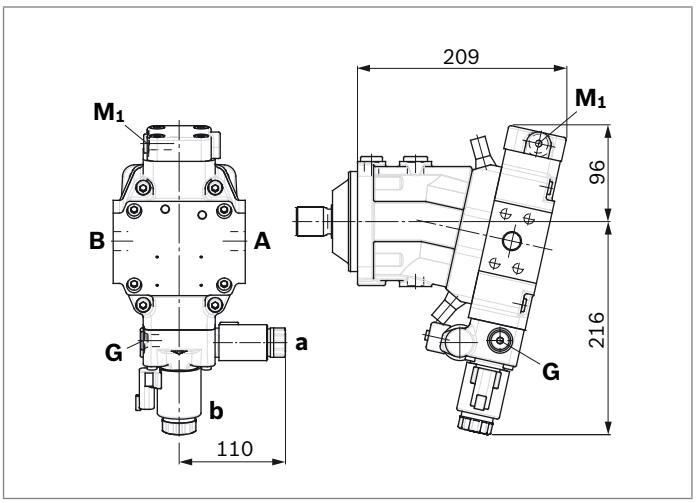

▼ **DA1, DA4** – Automatic speed related control, with hydraulic travel direction valve

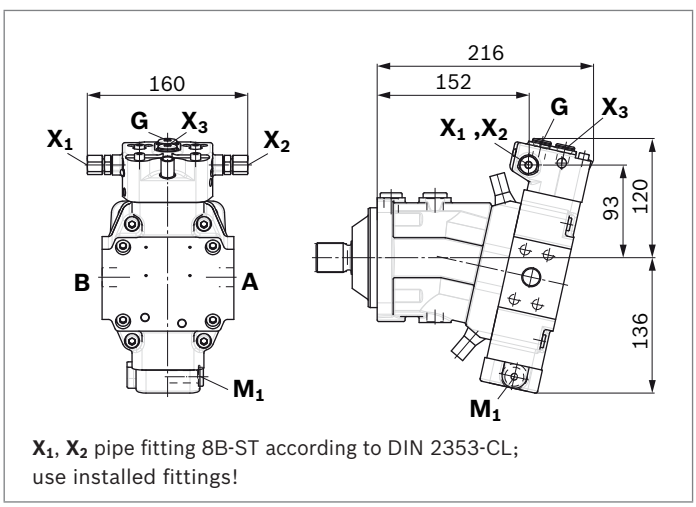

X1, **X2** pipe fitting 8B-ST according to DIN 2353-CL; use installed fittings!

▼ **DA2, DA3, DA5, DA6** – Automatic speed related control, with electric travel direction valve and electric $V_{g\,max}$-circuit

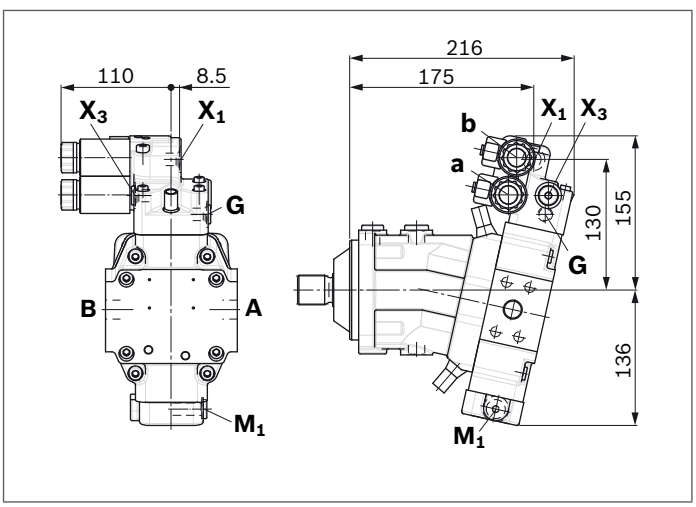

Dimensions, sizes 250

HD1, HD2 – Proportional control, hydraulic
HZ – Two-point control, hydraulic
Port plate 2 — SAE working ports **A** and **B** lateral, opposing

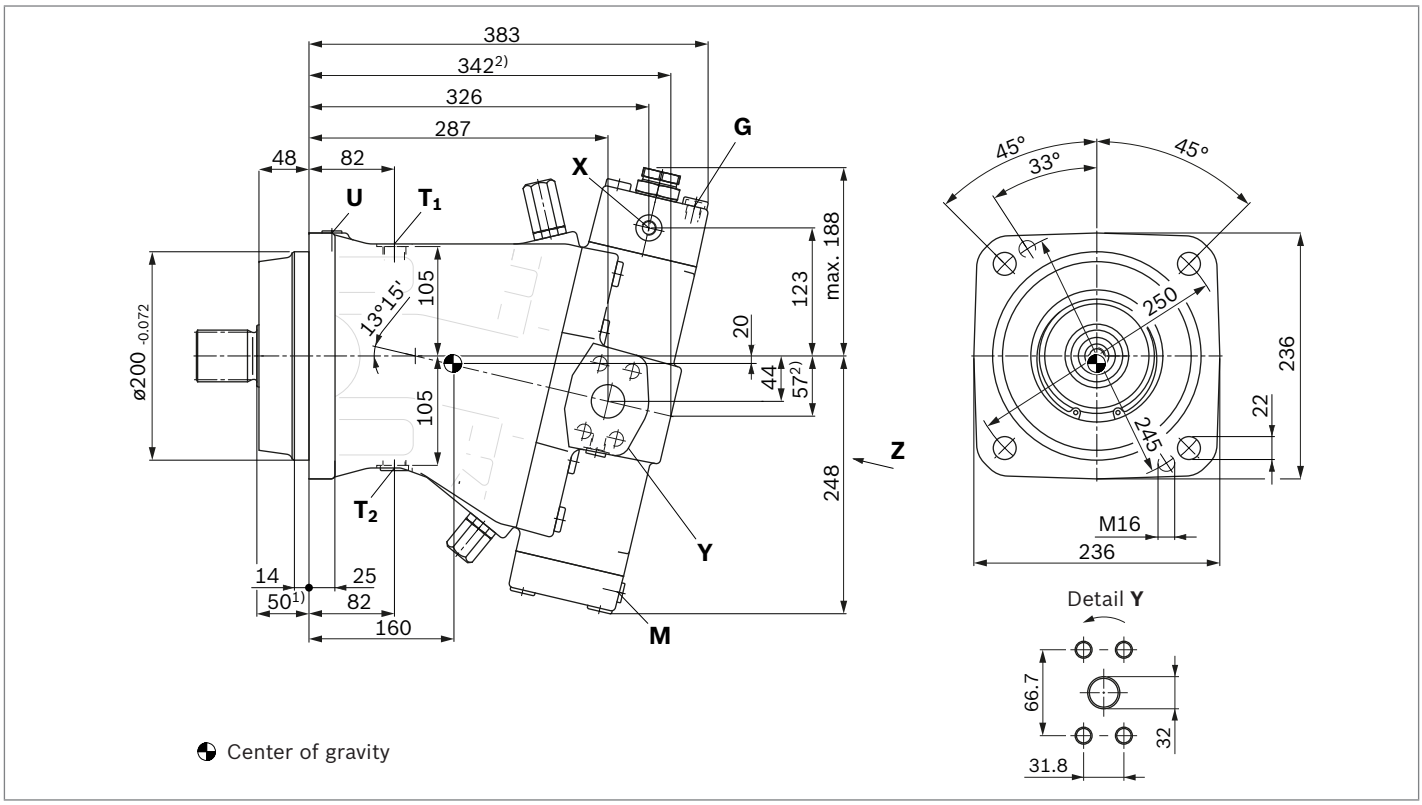

Ports		Standard	Size[3]	$p_{max\ abs}$ [bar][4]	State[8]
A, B	Working port Fastening thread A/B	SAE J518[5] DIN 13	1 1/4 in M14 × 2; 19 deep	400	O
A_1, B_1	Additional working port for plate 15 fastening thread A_1/B_1	SAE J518[5] DIN 13	1 1/4 in M14 × 2; 19 deep	400	O
T_1	Drain port	DIN 3852[7]	M22 × 1.5; 14 deep	3	X[6]
T_2	Drain port	DIN 3852[7]	M22 × 1.5; 14 deep	3	O[6]
G	Synchronous control	DIN 3852[7]	M14 × 1.5; 12 deep	400	X
G_2	2nd pressure setting (HD.D, EP.D)	DIN 3852[7]	M14 × 1.5; 12 deep	400	X
P	Pilot oil supply (EP)	DIN 3852[7]	M14 × 1.5; 12 deep	100	O
U	Bearing flushing	DIN 3852[7]	M14 × 1.5; 12 deep	3	X
X	Pilot signal (HD, HZ, HA1T/HA2T)	DIN 3852[7]	M14 × 1.5; 12 deep	100	O
X	Pilot signal (HA1, HA2)	DIN 3852[7]	M14 × 1.5; 12 deep	3	X
X_1, X_2	Pilot signal (DA)	DIN 2353-CL	8B-ST	40	O
X_3	Pilot signal (HD.G, EP.G)	DIN 3852[7]	M14 × 1.5; 12 deep	400	O
M	Stroking chamber measurement	DIN 3852[7]	M14 × 1.5; 12 deep	400	X
M_A, M_B	Pressure measurement A/B	DIN 3852[7]	M14 × 1.5; 12 deep	400	X
M_{St}	Pilot pressure measurement	DIN 3852[7]	M14 × 1.5; 12 deep	400	X

1) To shaft collar
2) Port plate 1/15 — SAE working ports **A** and **B** at rear
3) For notes on tightening torques, see the instruction manual
4) Depending on the application, momentary pressure peaks can occur. Keep this in mind when selecting measuring devices and fittings.
5) Only dimensions according to SAE J518, metric fastening thread is a deviation from the standard
6) Depending on installation position, **T_1** or **T_2** must be connected (see also installation instructions on page 52).
7) The countersink can be deeper than as specified in the standard.
8) O = Must be connected (plugged when delivered)
X = Plugged (in normal operation)

Europe | RE-L 91504/05 2016, Bosch Rexroth AG

▼ **Location of the working ports on the port plates** (view **Z**)

02 SAE working ports **A** and **B** lateral, opposite

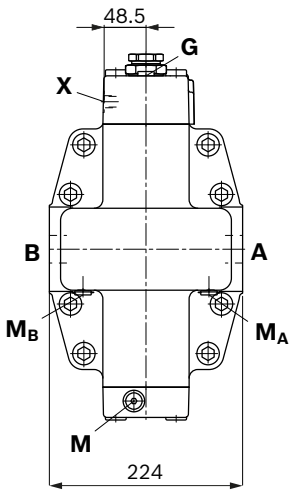

01 SAE working ports **A** and **B** at rear

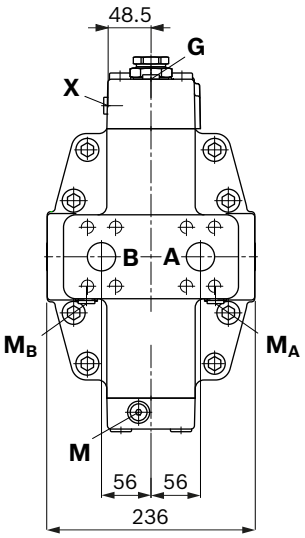

15 SAE working ports **A** and **B** lateral, opposite, A_1 and B_1 at rear

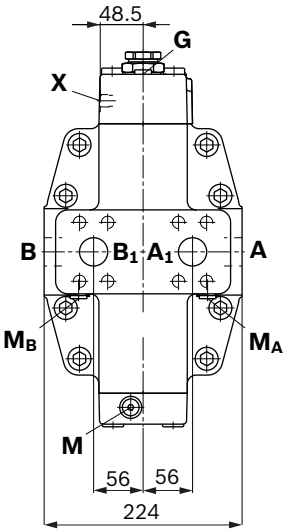

▼ **Splined shaft DIN 5480**

Z – W50×2×24×9g

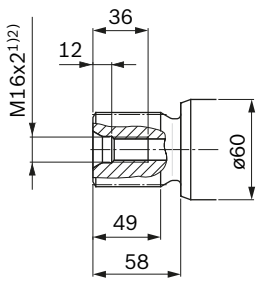

▼ **Cyl. Keyed shaft, DIN 6885**

P – AS14×9×80

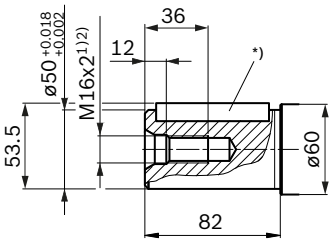

*) Key width 14

1) For notes on tightening torques, see the instruction manual
2) Center bore according to DIN 332 (thread according to DIN 13)

▼ **EP1, EP2** – Proportional control, electric

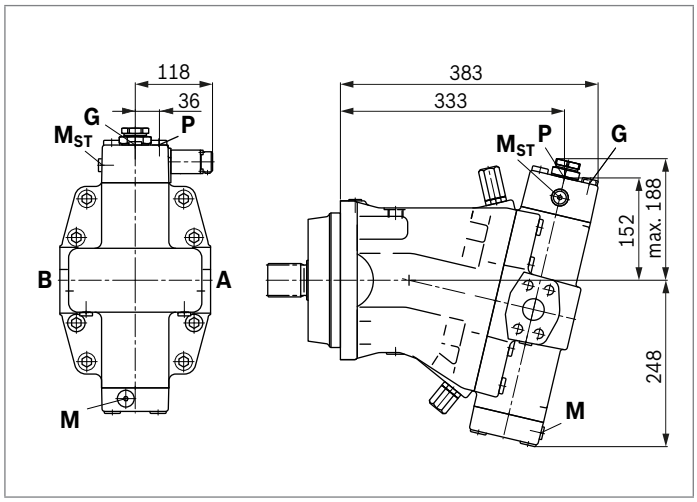

▼ **EP.D, EP.G** – Proportional control electric, with pressure control fixed setting; remote controlled (EP.G)

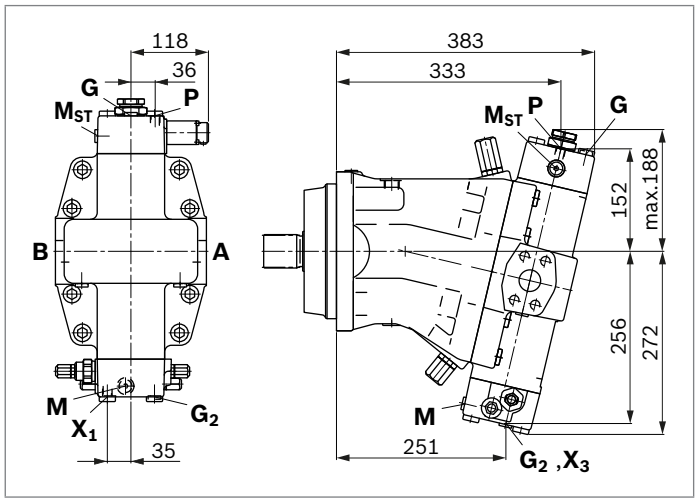

▼ **HD.D, HD.G** – Proportional control hydraulic with pressure control fixed setting; remote controlled (HD.G)

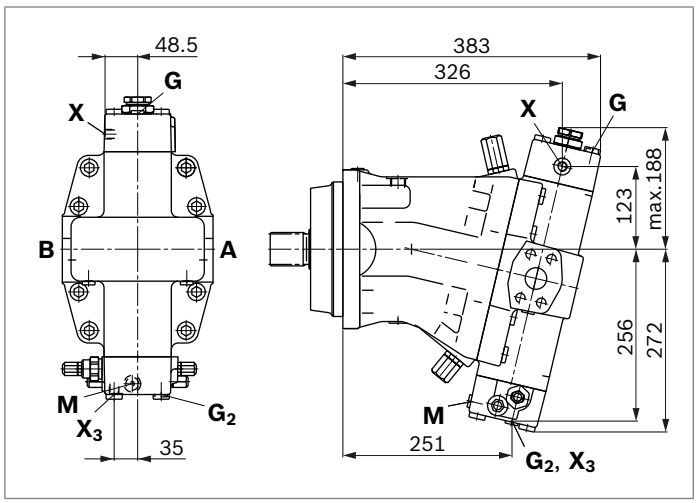

▼ **EZ1, EZ2** – Two-point control, electric

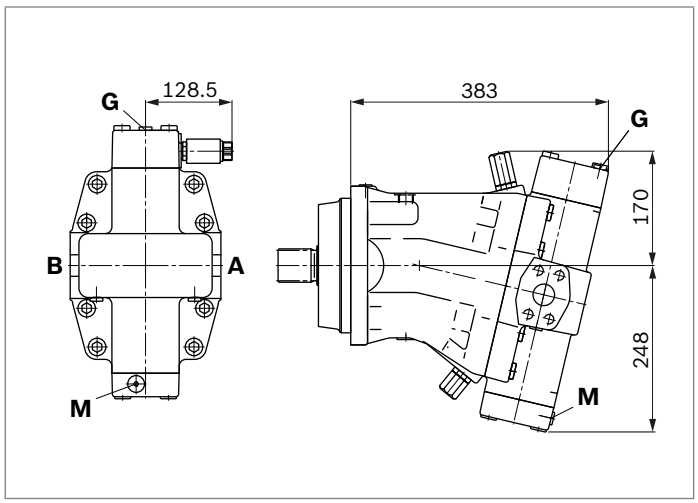

▼ **HA1, HA2 / HA1T, HA2T** – Automatic high-pressure related control, with override hydraulic remote control, proportional

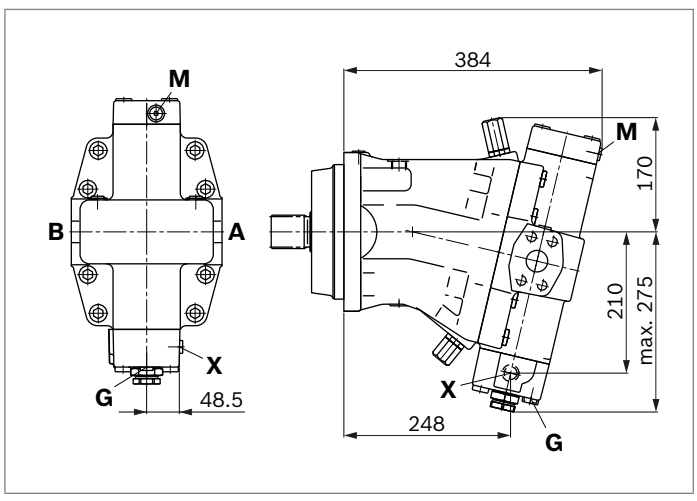

▼ **DA** – Automatic speed related control, with hydraulic travel direction valve

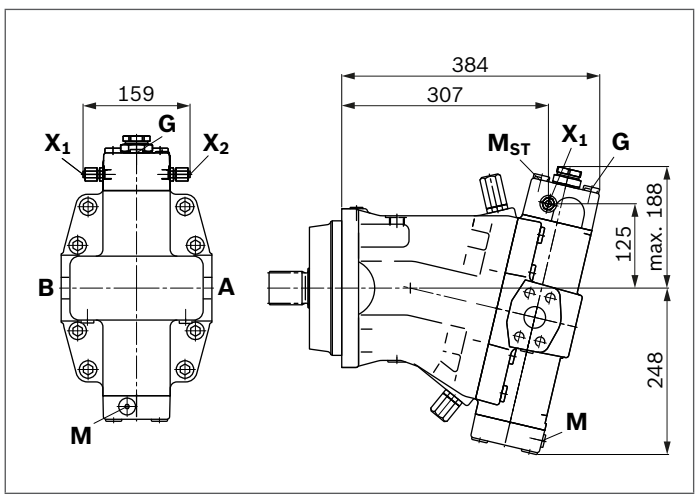

Dimensions, sizes 355

HD1, HD2 – Proportional control, hydraulic
HZ – Two-point control, hydraulic

Port plate 2 — SAE working ports **A** and **B** lateral, opposite

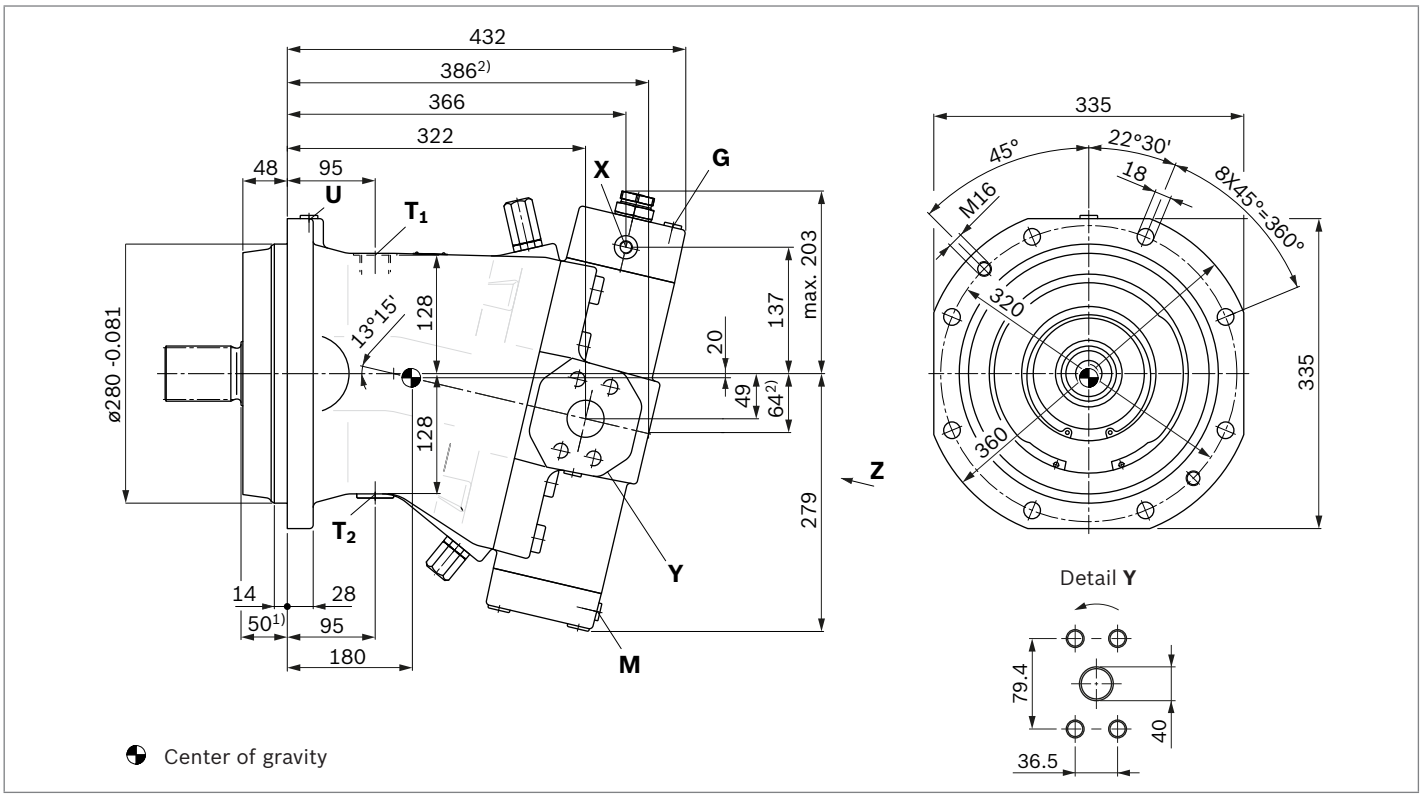

Ports		Standard	Size[3]	$p_{max\ abs}$ [bar][4]	State[8]
A, B	Working port Fastening thread A/B	SAE J518[5] DIN 13	1 1/2 in M16 × 2; 24 deep	400	O
A_1, B_1	Additional working port for plate 15 fastening thread A_1/B_1	SAE J518[5] DIN 13	1 1/2 in M16 × 2; 24 deep	400	O
T_1	Drain port	DIN 3852[7]	M33 × 2; 18 deep	3	X[6]
T_2	Drain port	DIN 3852[7]	M33 × 2; 18 deep	3	O[6]
G	Synchronous control	DIN 3852[7]	M14 × 1.5; 12 deep	400	X
G_2	2nd pressure setting (HD.D, EP.D)	DIN 3852[7]	M14 × 1.5; 12 deep	400	X
P	Pilot oil supply (EP)	DIN 3852[7]	M14 × 1.5; 12 deep	100	O
U	Bearing flushing	DIN 3852[7]	M14 × 1.5; 12 deep	3	X
X	Pilot signal (HD, HZ, HA1T/HA2T)	DIN 3852[7]	M14 × 1.5; 12 deep	100	O
X	Pilot signal (HA1, HA2)	DIN 3852[7]	M14 × 1.5; 12 deep	3	X
X_1, X_2	Pilot signal (DA)	DIN 2353-CL	8B-ST	40	O
X_3	Pilot signal (HD.G, EP.G)	DIN 3852[7]	M14 × 1.5; 12 deep	400	O
M	Stroking chamber measurement	DIN 3852[7]	M14 × 1.5; 12 deep	400	X
M_A, M_B	Pressure measurement A/B	DIN 3852[7]	M14 × 1.5; 12 deep	400	X
M_{ST}	Pilot pressure measurement	DIN 3852[7]	M14 × 1.5; 12 deep	400	X

1) To shaft collar
2) Port plate 1/15 — SAE working ports **A** and **B**
3) For notes on tightening torques, see the instruction manual
4) Depending on the application, momentary pressure peaks can occur. Keep this in mind when selecting measuring devices and fittings.
5) Only dimensions according to SAE J518, metric fastening thread is a deviation from the standard
6) Depending on installation position, **T_1** or **T_2** must be connected (see also installation instructions on page 52).
7) The countersink can be deeper than as specified in the standard.
8) O = Must be connected (plugged when delivered)
X = Plugged (in normal operation)

▼ **Location of the working ports on the port plates** (view **Z**)

02 SAE working ports
A and **B** lateral, opposite

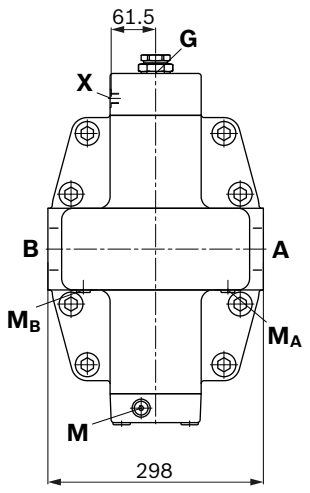

01 SAE working ports
A and **B** at rear

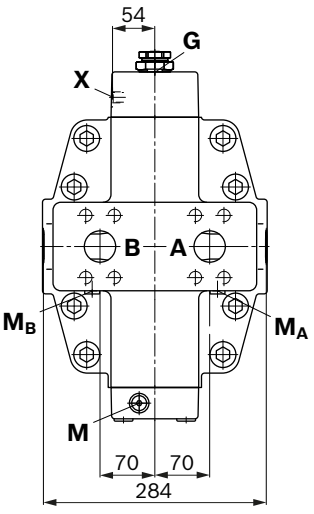

15 SAE working ports
A and **B** lateral,
opposite,
A_1 and B_1 at rear

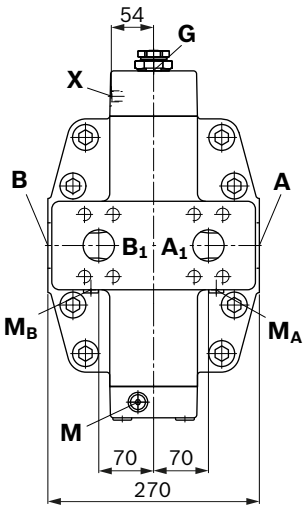

▼ **Splined shaft DIN 5480**

Z – W60×2×28×9g

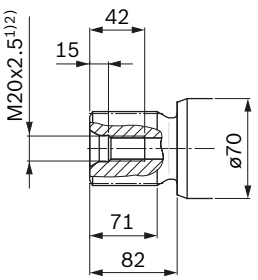

▼ **Cyl. Keyed shaft, DIN 6885**

P – AS18×11×100

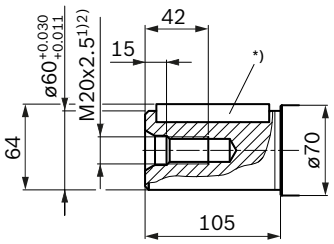

*) Key width 18

1) For notes on tightening torques, see the instruction manual
2) Center bore according to DIN 332 (thread according to DIN 13)

▼ **EP1, EP2** – Proportional control, electric

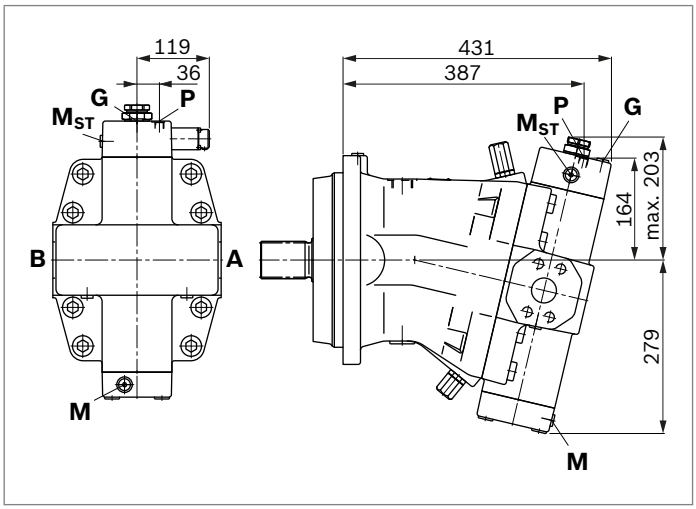

▼ **EP.D, EP.G** – Proportional control electric, with pressure control fixed setting; remote controlled (EP.G)

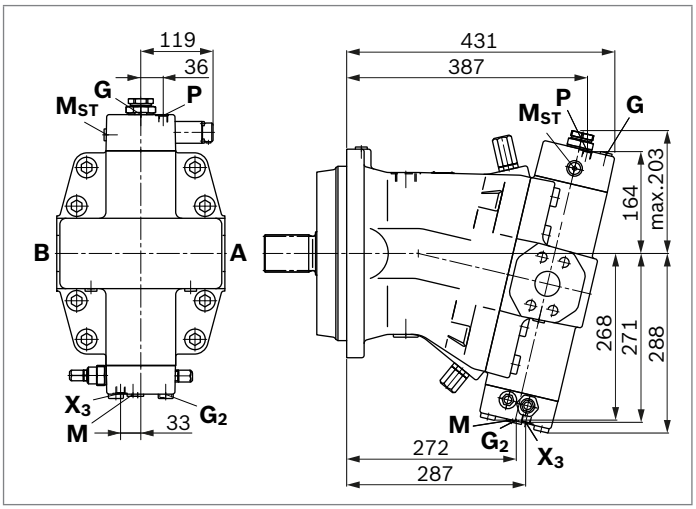

▼ **HD.D, HD.G** – Proportional control hydraulic with pressure control fixed setting; remote controlled (HD.G)

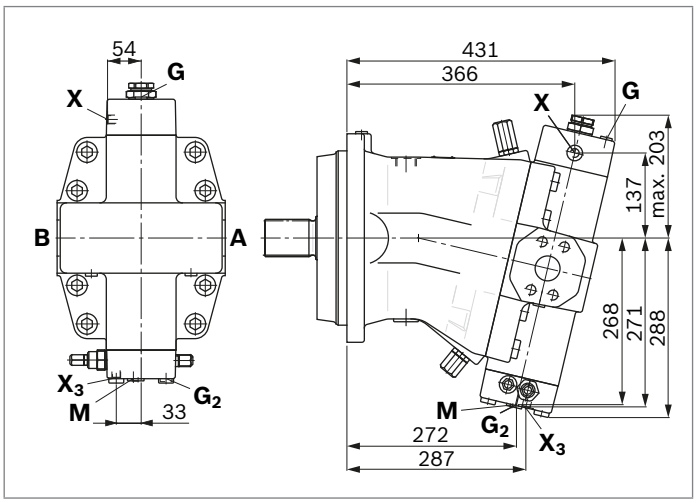

▼ **EZ1, EZ2** – Two-point control, electric

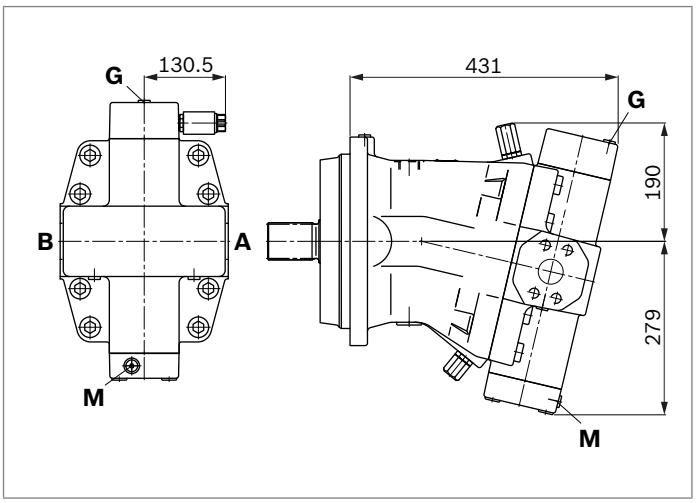

▼ **HA1, HA2 / HA1T, HA2T** – Automatic high-pressure related control, with override hydraulic remote control, proportional

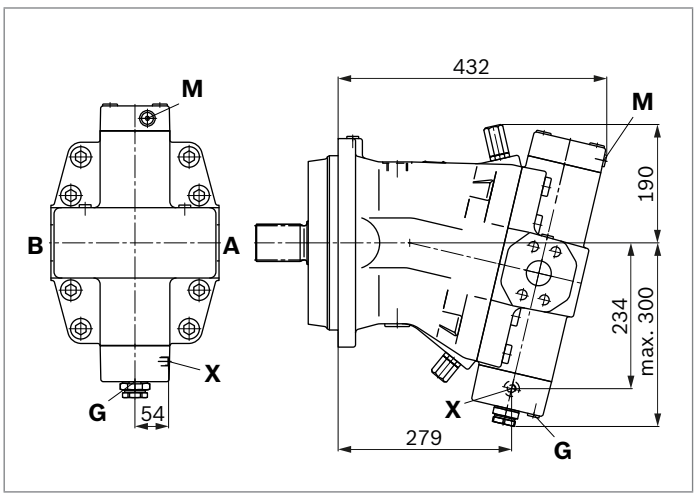

▼ **DA** – Automatic speed related control, with hydraulic travel direction valve

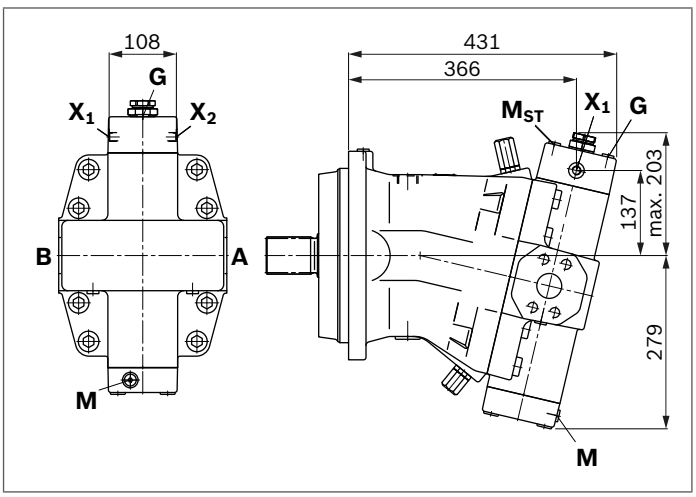

Dimensions, sizes 500

HD1, HD2 – Proportional control, hydraulic
HZ – Two-point control, hydraulic
Port plate 2 — SAE working ports **A** and **B** lateral, opposite

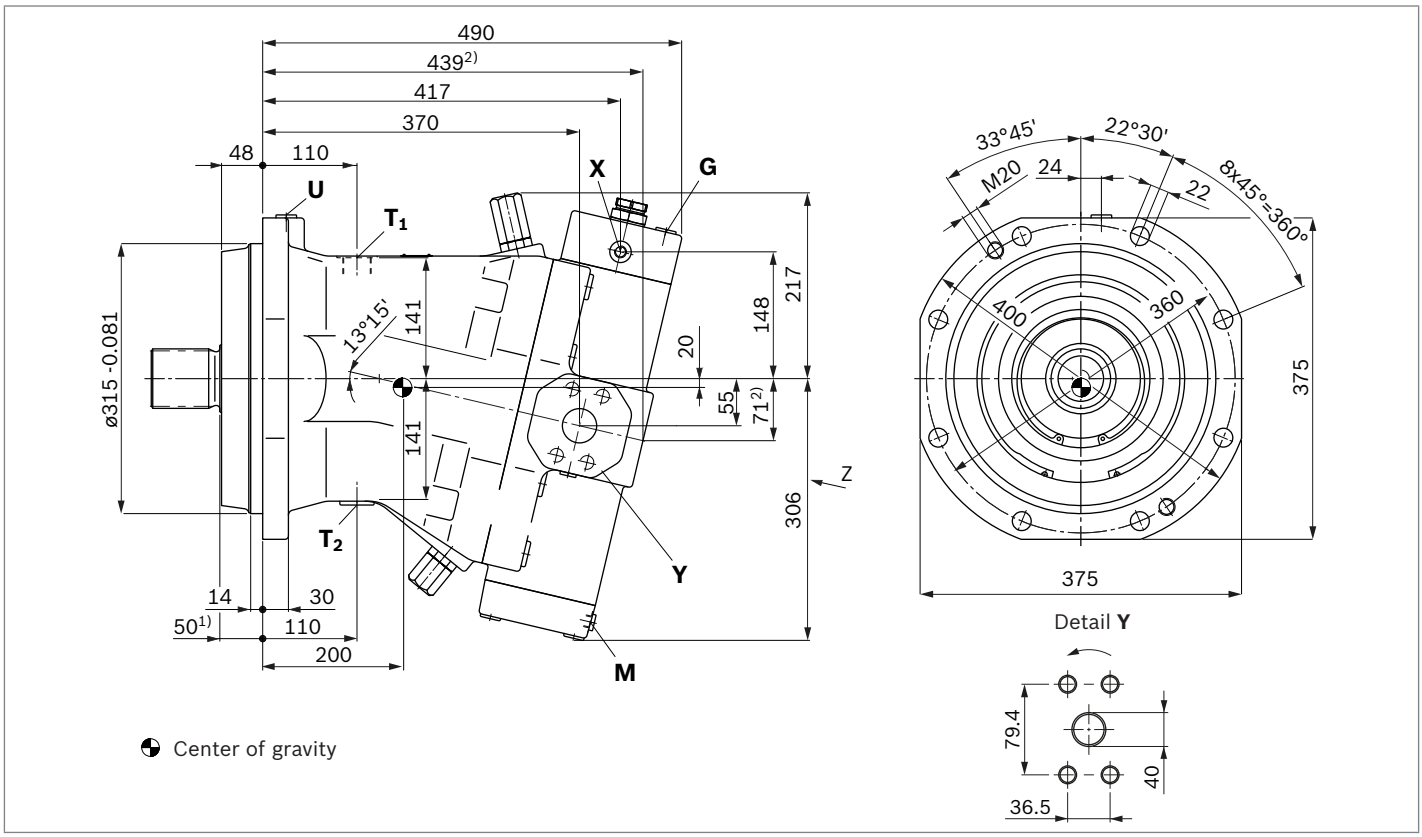

Ports		Standard	Size[3]	$p_{max\ abs}$ [bar][4]	State[8]
A, B	Working port Fastening thread A/B	SAE J518[5] DIN 13	1 1/2 in M16 × 2; 24 deep	400	O
A_1, B_1	Additional working port for plate 15 fastening thread A_1/B_1	SAE J518[5] DIN 13	1 1/2 in M16 × 2; 24 deep	400	O
T_1	Drain port	DIN 3852[7]	M33 × 2; 18 deep	3	X[6]
T_2	Drain port	DIN 3852[7]	M33 × 2; 18 deep	3	O[6]
G	Synchronous control	DIN 3852[7]	M18 × 1.5; 12 deep	400	X
G_2	2nd pressure setting (HD.D, EP.D)	DIN 3852[7]	M18 × 1.5; 12 deep	400	X
P	Pilot oil supply (EP)	DIN 3852[7]	M14 × 1.5; 12 deep	100	O
U	Bearing flushing	DIN 3852[7]	M18 × 1.5; 12 deep	3	X
X	Pilot signal (HD, HZ, HA1T/HA2T)	DIN 3852[7]	M14 × 1.5; 12 deep	100	O
X	Pilot signal (HA1, HA2)	DIN 3852[7]	M14 × 1.5; 12 deep	3	X
X_1, X_2	Pilot signal (DA)	DIN 2353-CL	8B-ST	40	O
X_3	Pilot signal (HD.G, EP.G)	DIN 3852[7]	M14 × 1.5; 12 deep	400	O
M	Stroking chamber measurement	DIN 3852[7]	M14 × 1.5; 12 deep	400	X
M_A, M_B	Pressure measurement A/B	DIN 3852[7]	M14 × 1.5; 12 deep	400	X
M_{St}	Pilot pressure measurement	DIN 3852[7]	M14 × 1.5; 12 deep	400	X

1) To shaft collar
2) Port plate 1/15 — SAE working ports **A** and **B** at rear
3) For notes on tightening torques, see the instruction manual
4) Depending on the application, momentary pressure peaks can occur. Keep this in mind when selecting measuring devices and fittings.
5) Only dimensions according to SAE J518, metric fastening thread is a deviation from the standard
6) Depending on installation position, **T_1** or **T_2** must be connected (see also installation instructions on page 52).
7) The countersink can be deeper than as specified in the standard.
8) O = Must be connected (plugged when delivered)
X = Plugged (in normal operation)

Europe | RE-L 91504/05 2016, Bosch Rexroth AG

▼ **Location of the working ports on the port plates** (view **Z**)

02 SAE working ports **A** and **B** lateral, opposite

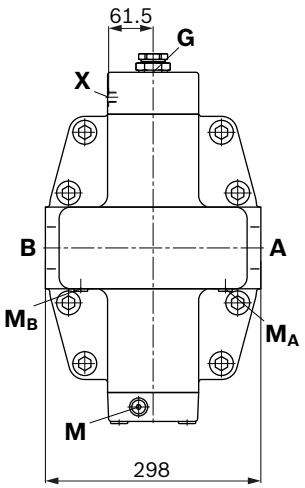

01 SAE working ports **A** and **B** at rear

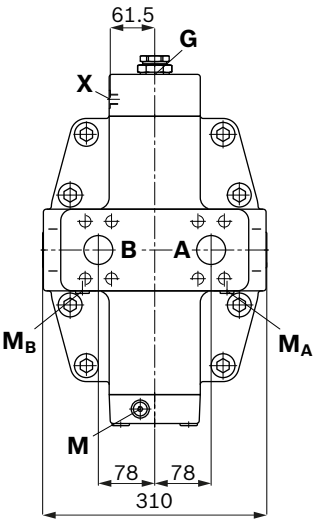

15 SAE working ports **A** and **B** lateral, opposite, A_1 and B_1 at rear

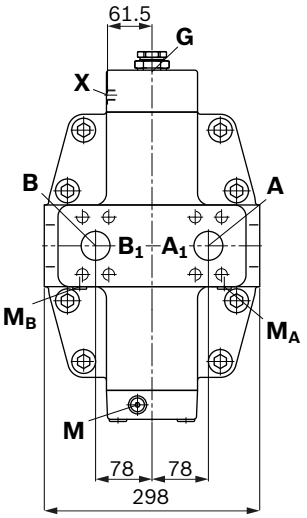

▼ **Splined shaft DIN 5480**

Z – W70×3×22×9g

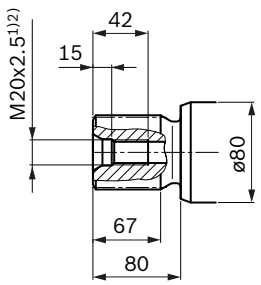

▼ **Cyl. Keyed shaft, DIN 6885**

P – AS20×12×100

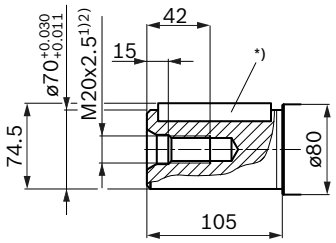

*) Key width 20

1) For notes on tightening torques, see the instruction manual
2) Center bore according to DIN 332 (thread according to DIN 13)

▼ **EP1, EP2** – Proportional control, electric

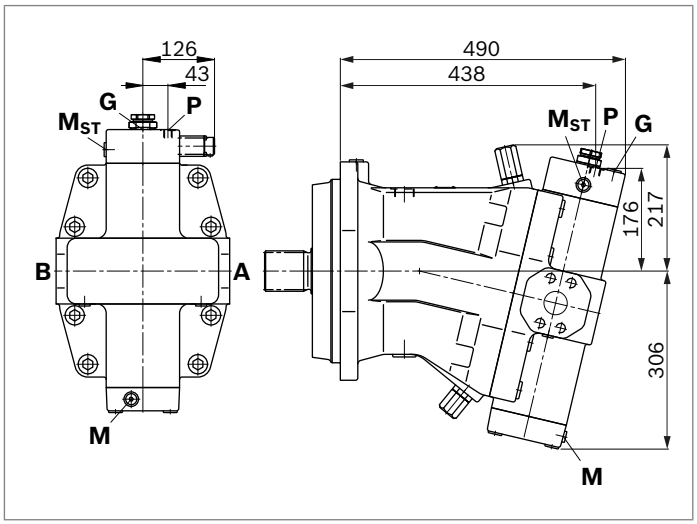

▼ **EP.D, EP.G** – Proportional control electric, with pressure control fixed setting; remote controlled (EP.G)

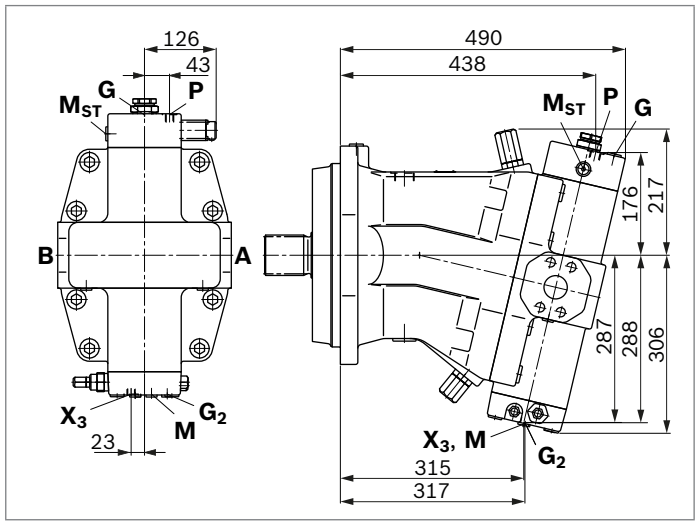

▼ **HD.D, HD.G** – Proportional control hydraulic with pressure control fixed setting; remote controlled (HD.G)

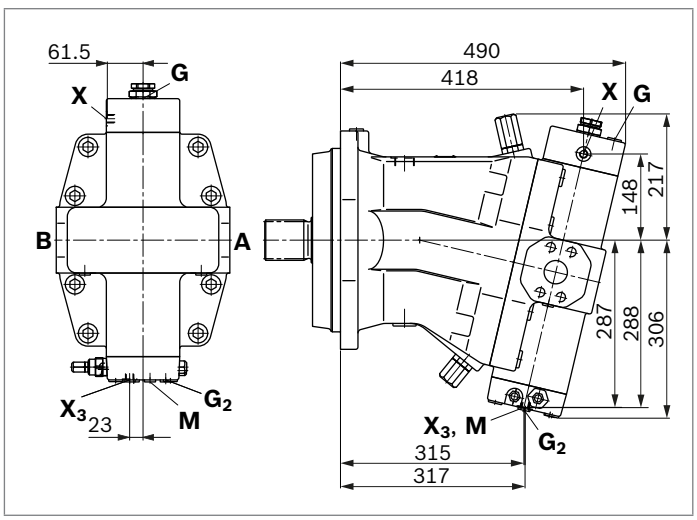

▼ **EZ1, EZ2** – Two-point control, electric

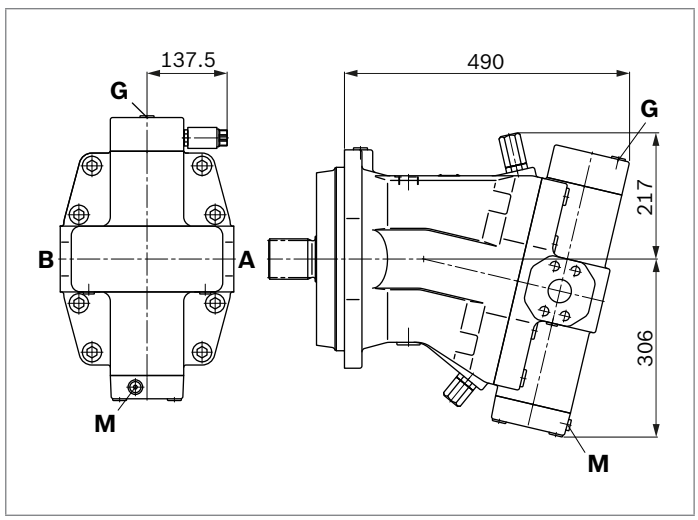

▼ **HA1, HA2 / HA1T, HA2T** – Automatic high-pressure related control, with override, hydraulic remote control, proportional

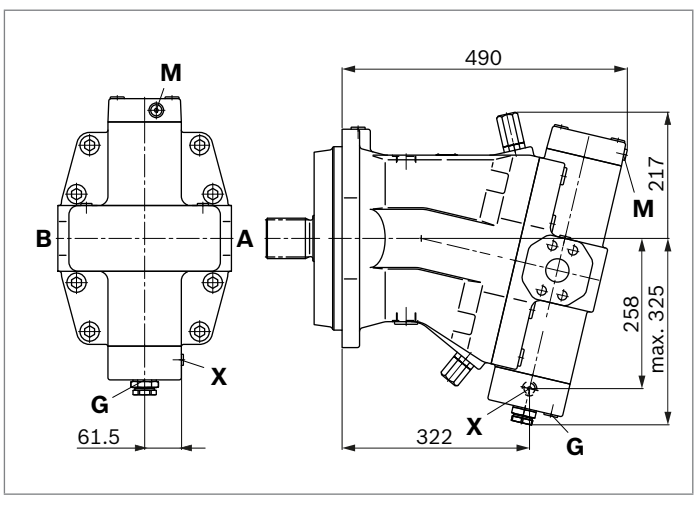

▼ **DA** – Automatic speed related control, with hydraulic travel direction valve

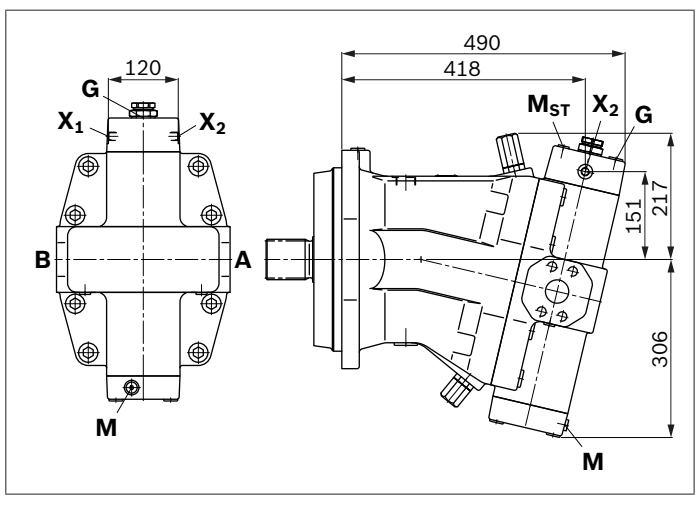

Dimensions, sizes 1000

HD1, HD2 – Proportional control, hydraulic
HZ – Two-point control, hydraulic

Port plate 2 – SAE working ports **A** and **B** lateral, opposite

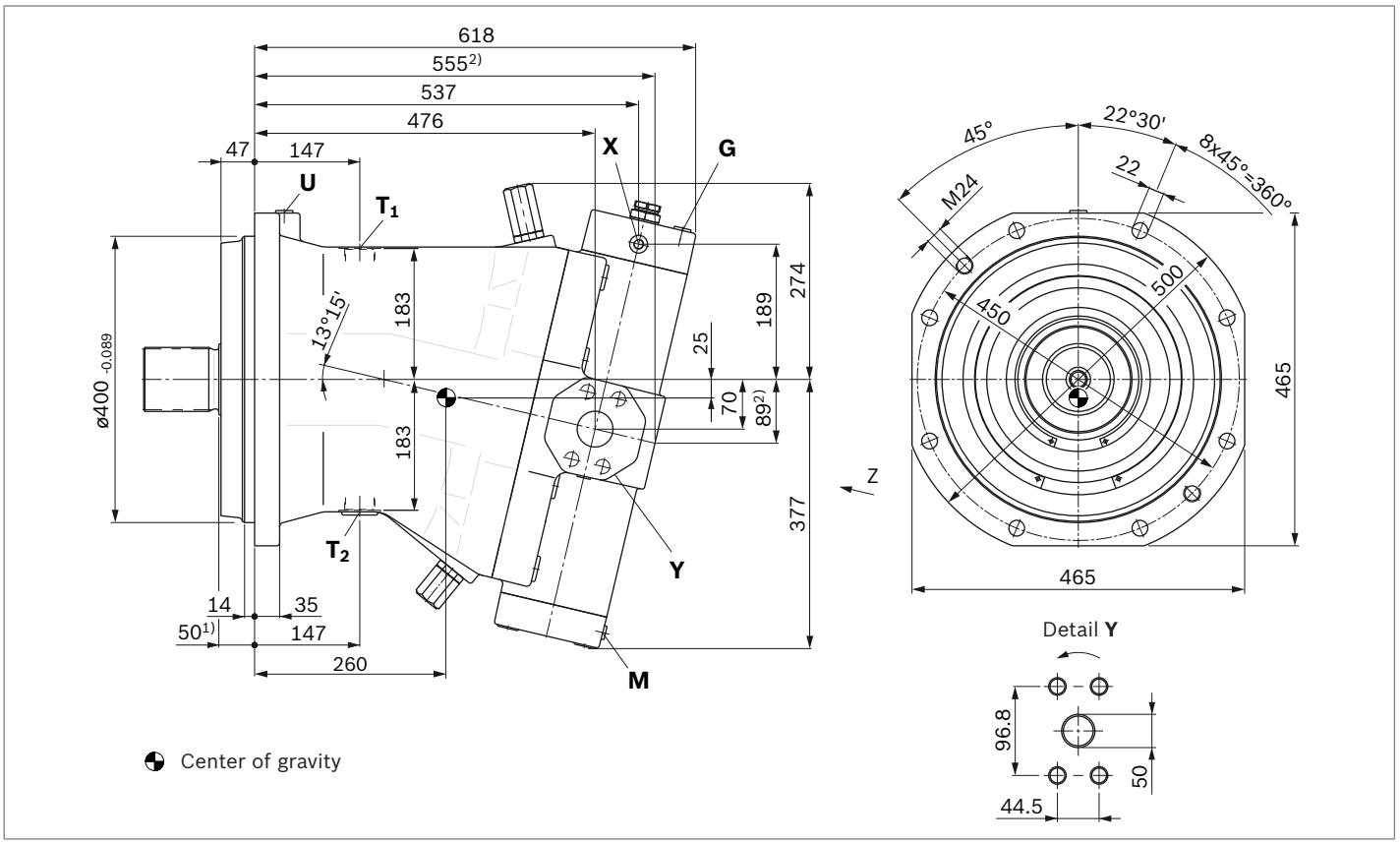

Ports		Standard	Size[3]	$p_{max\ abs}$ [bar][4]	State[8]
A, B	Working port	SAE J518[5]	2 in	400	O
	Fastening thread A/B	DIN 13	M20 × 2.5; 24 deep		
A_1, B_1	Additional working port for plate 15	SAE J518[5]	2 in	400	O
	fastening thread A_1/B_1	DIN 13	M20 × 2.5; 24 deep		
T_1	Drain port	DIN 3852[7]	M42 × 2; 20 deep	3	X[6]
T_2	Drain port	DIN 3852[7]	M42 × 2; 20 deep	3	O[6]
G	Synchronous control	DIN 3852[7]	M18 × 1.5; 12 deep	400	X
G_2	2nd pressure setting (HD.E, EP.E)	DIN 3852[7]	M18 × 1.5; 12 deep	400	X
P	Pilot oil supply (EP)	DIN 3852[7]	M14 × 1.5; 12 deep	100	O
U	Bearing flushing	DIN 3852[7]	M18 × 1.5; 12 deep	3	X
X	Pilot signal (HD, HZ, HA1T/HA2T)	DIN 3852[7]	M14 × 1.5; 12 deep	100	O
X	Pilot signal (HA1, HA2)	DIN 3852[7]	M14 × 1.5; 12 deep	3	X
X_3	Pilot signal (HD.G, EP.G)	DIN 3852[7]	M14 × 1.5; 12 deep	400	O
M	Stroking chamber measurement	DIN 3852[7]	M14 × 1.5; 12 deep	400	X
M_A, M_B	Pressure measurement A/B	DIN 3852[7]	M14 × 1.5; 12 deep	400	X
M_{St}	Pilot pressure measurement	DIN 3852[7]	M14 × 1.5; 12 deep	400	X

1) To shaft collar
2) Port plate 1/15 – SAE working ports **A** and **B** at rear
3) For notes on tightening torques, see the instruction manual
4) Depending on the application, momentary pressure peaks can occur. Keep this in mind when selecting measuring devices and fittings.
5) Only dimensions according to SAE J518, metric fastening thread is a deviation from the standard
6) Depending on installation position, **T_1** or **T_2** must be connected (see also installation instructions on page 52).
7) The countersink can be deeper than as specified in the standard.
8) O = Must be connected (plugged when delivered)
X = Plugged (in normal operation)

▼ **Location of the working ports on the port plates** (view **Z**)

02 SAE working ports
A and **B** lateral,
opposite

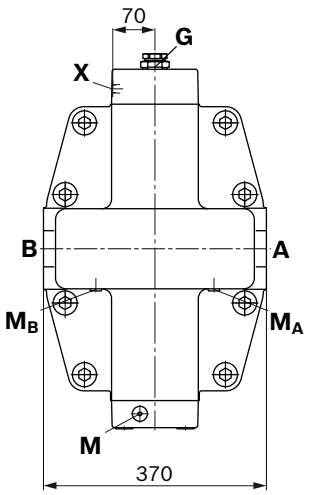

01 SAE working ports
A and **B** at rear

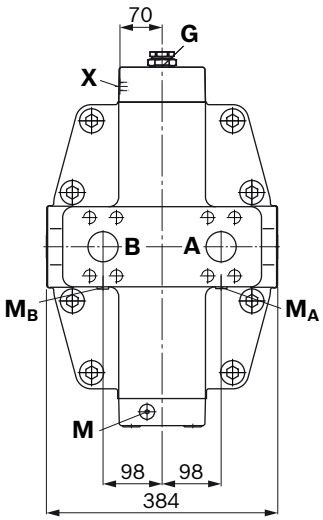

15 SAE working ports
A and **B** lateral,
opposite,
A_1 and B_1 at rear

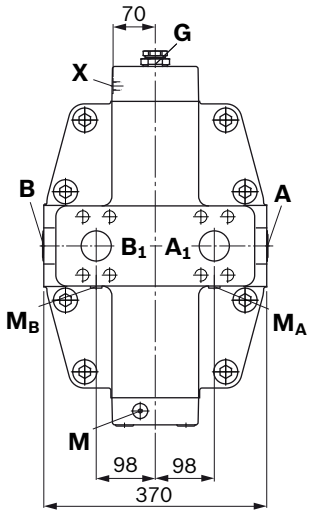

▼ **Splined shaft DIN 5480**

Z – W90×3×28×9g

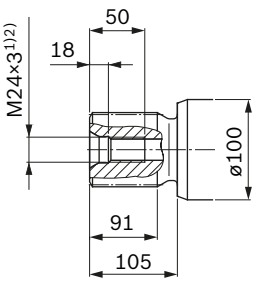

▼ **Cyl. Keyed shaft, DIN 6885**

P – AS25×14×125

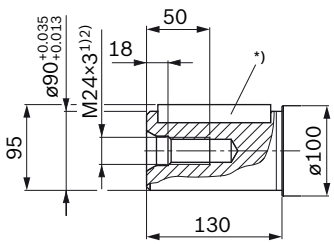

*) Key width 25

1) For notes on tightening torques, see the instruction manual
2) Center bore according to DIN 332 (thread according to DIN 13)

▼ **EP1, EP2** – Proportional control, electric

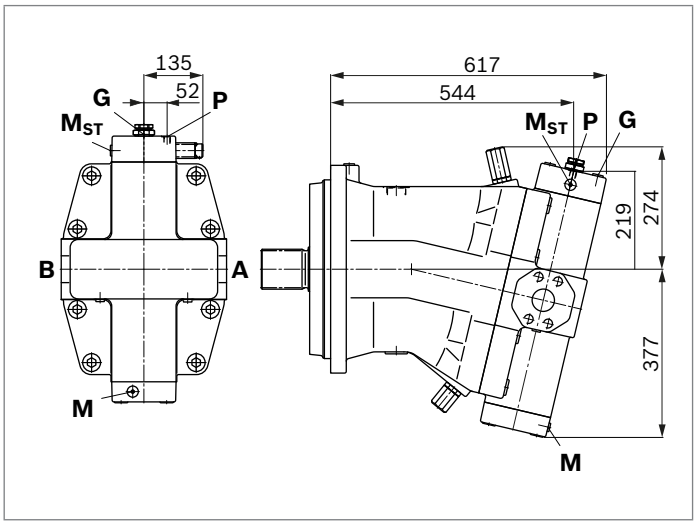

▼ **EP.D, EP.G** – Proportional control electric, with pressure control fixed setting; remote controlled (EP.G)

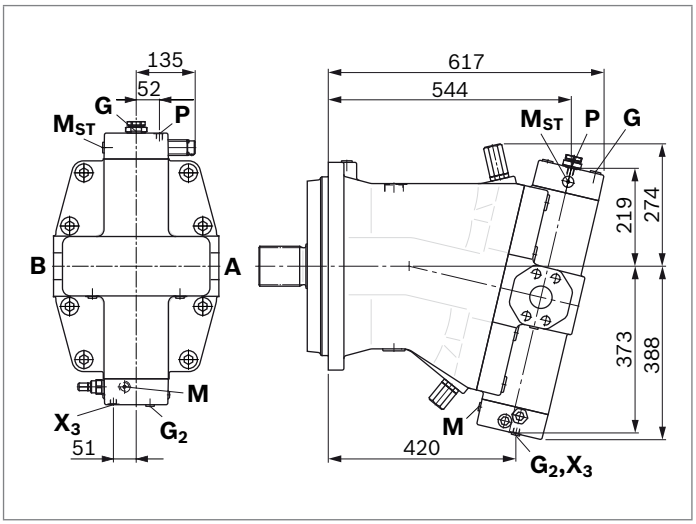

▼ **HD.D, HD.G** – Proportional control hydraulic with pressure control fixed setting; remote controlled (HD.G)

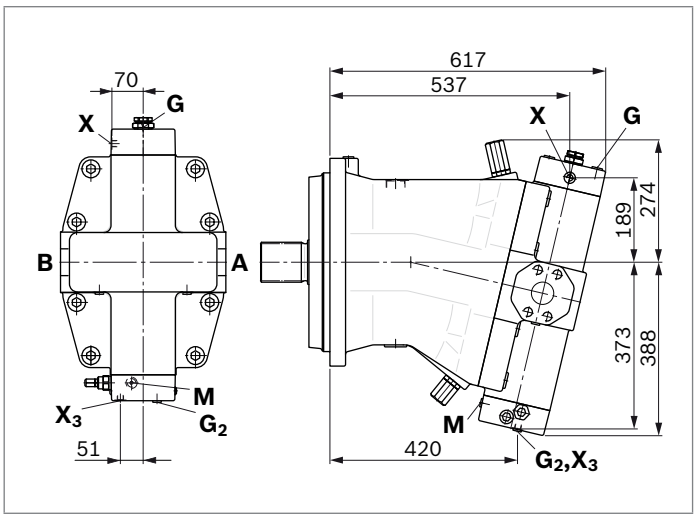

▼ **EZ1, EZ2** – Two-point control, electric

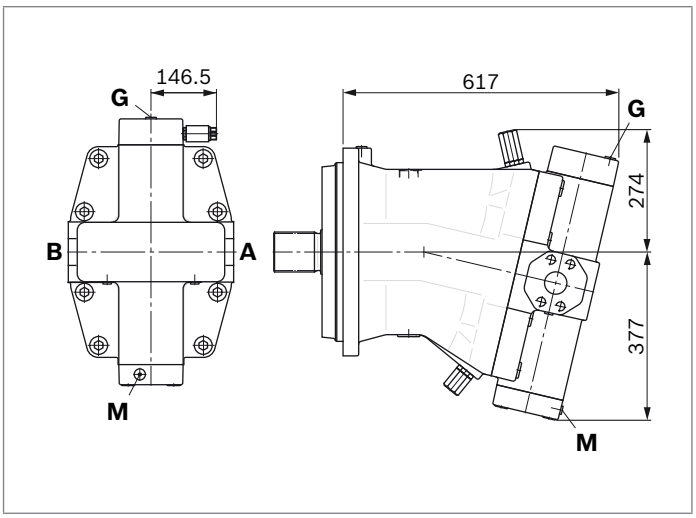

▼ **HA1, HA2 / HA1T, HA2T** – Automatic high-pressure related control, with override hydraulic remote control, proportional

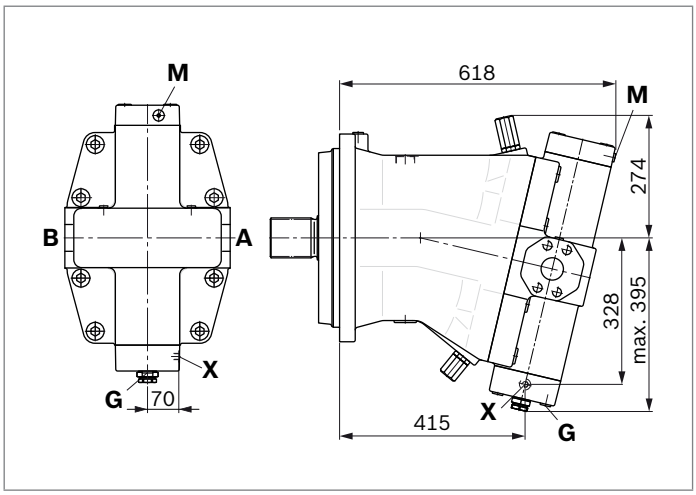

Connector for solenoids

DEUTSCH DT04-2P-EP04
Size 28
Molded connector, 2-pin, without bidirectional suppressor diode
The following type of protection ensues with an installed mating connector:
- IP67 (DIN/EN 60529) and
- IP69K (DIN 40050-9)

▼ **Switching symbol**

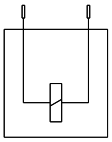

▼ **Mating connector DEUTSCH DT06-2S-EP04**

Consisting of	DT designation
1 housing	DT06-2S-EP04
1 wedge	W2S
2 sockets	0462-201-16141

The mating connector is not included in the scope of delivery. This can be supplied by Bosch Rexroth on request (material number R902601804).

Notice
- If necessary, you can change the position of the connector by turning the solenoid.
- The procedure is defined in the instruction manual.

HIRSCHMANN DIN EN 175 301-803-A/ISO 4400
Sizes 250 to 1000
Without bidirectional suppressor diode
Type of protection:
- IP65 (DIN/EN 60529)

The seal ring in the cable fitting is suitable for lines of diameter 4.5 mm to 10 mm.
The mating connector is included in the scope of delivery.

3

Flushing and boost-pressure valve

The flushing and boost-pressure valve is used to remove heat from the hydraulic circuit.

In a closed circuit, it is used for flushing the case and safeguarding the minimum boost pressure.
Hydraulic fluid is directed from the respective low pressure side into the motor housing. This is then fed into the reservoir, together with the leakage. In the closed circuit, the removed hydraulic fluid must be replaced by cooled hydraulic fluid supplied by the boost pump.
The valve is mounted on the port plate or integrated (depending on the control type and size).

Cracking pressure of pressure retaining valve
(observe when setting the primary valve)

- sizes 28, 250 to 1000, fixed setting 16 bar

Switching pressure of flushing spool Δp

- size 28, 8±1 bar
- sizes 250 to 1000, 17.5±1.5 bar

Flushing flow q_v
Orifices can be used to adjust the flushing flows as required. The following parameters are based on:
$\Delta p_{ND} = p_{ND} - p_G$ = 25 bar and ν = 10 mm²/s
(p_{ND} = low pressure, p_G = case pressure)

Flushing valve for size 28

Material number of orifice	ø [mm]	q_v [l/min]
R909651766	1.2	3.5
R909419695	1.4	5

Flushing valve for sizes 250 to 1000

Material number of orifice	ø [mm]	q_v [l/min]
R909419697	2.0	10
R910928643	2.8	16

▼ **Circuit diagram EP, size 28**

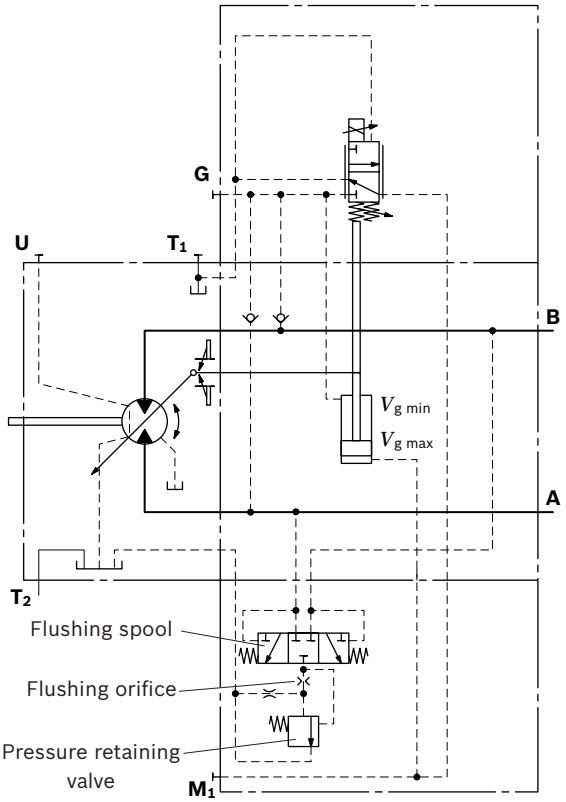

▼ **Circuit diagram EP, sizes 250 to 1000**

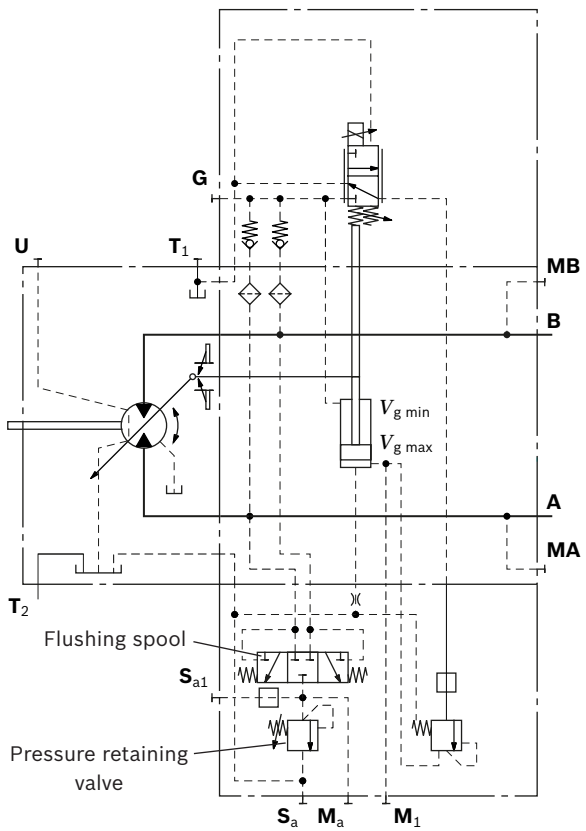

▼ **Dimensions, size 28**

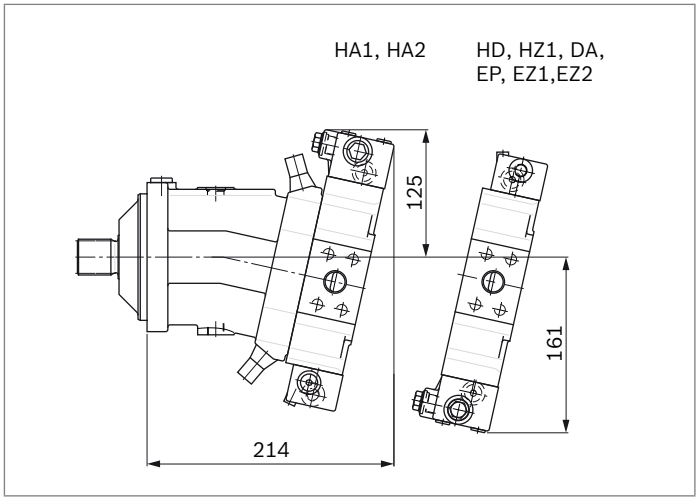

▼ **Dimensions, sizes 250 to 1000**

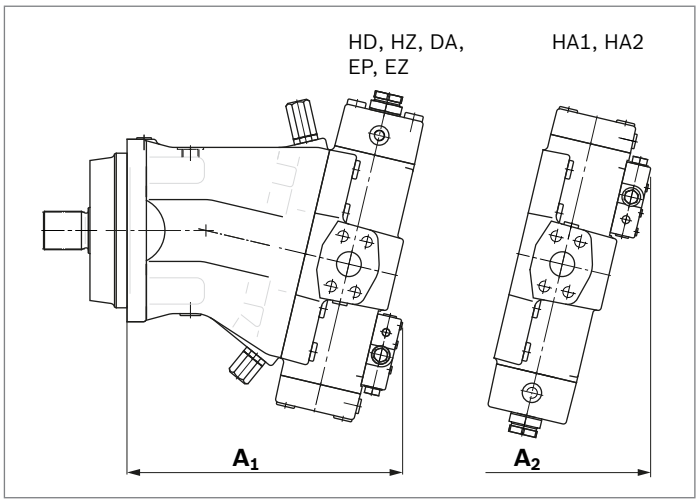

NG	A1	A2
250	357	402
355	397	446
500	440	504
1000	552	629

Swivel angle indicator

Optical (V)

The swivel position is indicated by a pin on the side of the port plate. The length of pin protruding depends on the position of the lens plate.
If the pin is flush with the port plate, the motor is at the beginning of control. At maximum swivel, the pin length is 8 mm (visible after removing the cap nut).

▼ **Example: Beginning of control at $V_{g\,max}$**

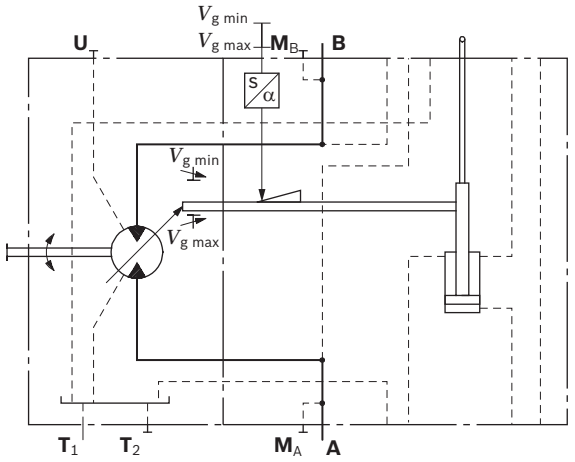

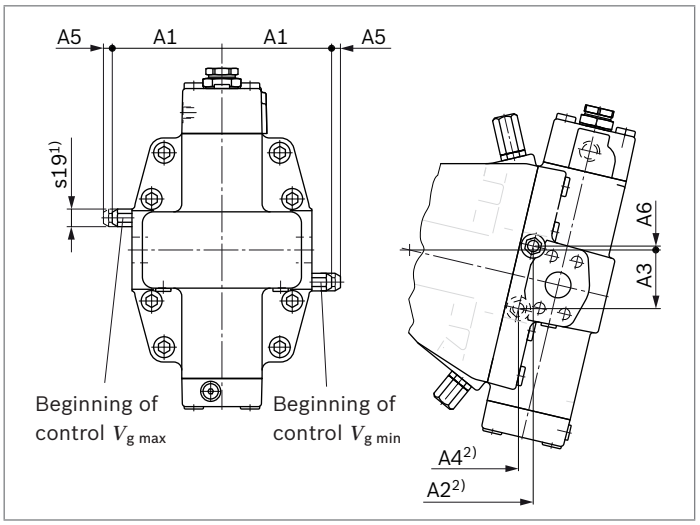

NG	A1	A2[2)]	A3	A4	A5[3)]	A6
250	136.5	256	73	238	11	5
355	159.5	288	84	266	11	8
500	172.5	331	89	309	11	3
1000	208.5	430	114	402	11	3

Electric (E)

The motor position is detected by an inductive position transducer. This converts the travel of the control device into an electric signal.
This signal is used to forward the swivel position to an electric control unit.
Inductive position transducer
Type of protection:

▶ IP65 (DIN/EN 60529)

▼ **Example: Beginning of control at $V_{g\,max}$**

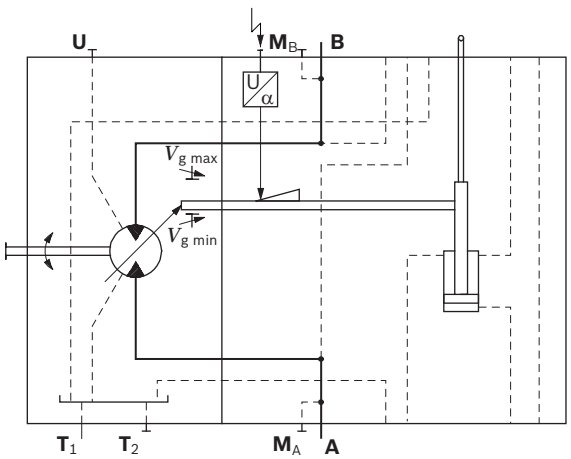

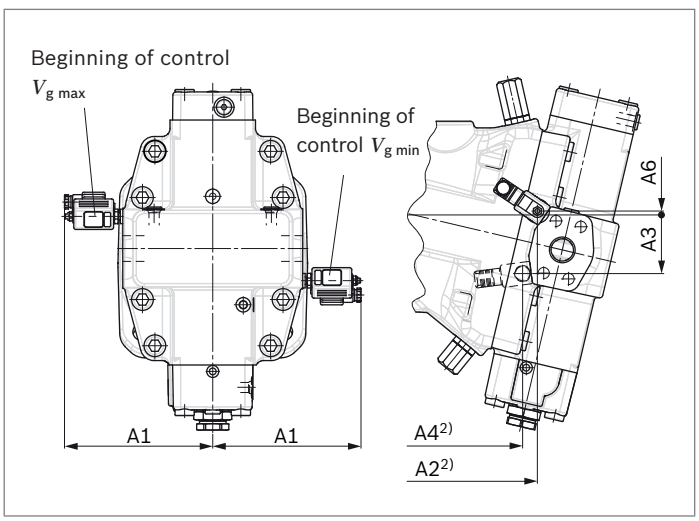

NG	A1	A2[2)]	A3	A4	A6
250	185	256	73	238	5
355	208	288	84	266	8
500	221	331	89	309	3
1000	257	430	114	402	3

1) Width across flats
2) Dimension to mounting flange
3) Required clearance for removal of cap nut

Bosch Rexroth AG, RE 91604/05.2016, Bosch Rexroth

Speed sensor

Version A6VM...U (“prepared for speed sensor”, i.e. without sensor) is equipped with a spline on the rotary group.
A signal proportional to motor rotational speed can be generated with the DSA/DSM or HDD speed sensor mounted. The DSA/DSM sensor registers the rotational speed and direction of rotation.
Type code, technical data, dimensions and parameters for the connector, plus safety instructions about the sensor can be found in the relevant data sheet 95132 – DSM, 95133 – DSA or 95135 – HDD.
The sensor is mounted on the port provided for this purpose with a mounting bolt. On deliveries without sensor, the port is plugged with a pressure-resistant cover.
We recommend ordering the A6VM variable motor complete with mounted sensor.

▼ **Circuit diagram**

Size 28

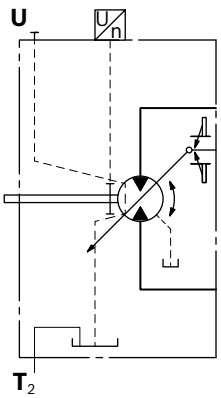

▼ **Dimensions**

Version “V” with DSA sensor or DSM senor (size 28)

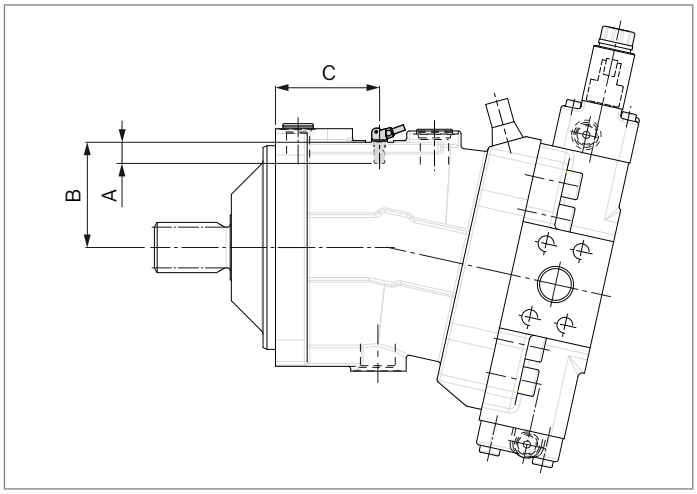

Version “H” with HDD sensor (sizes 250 to 500)

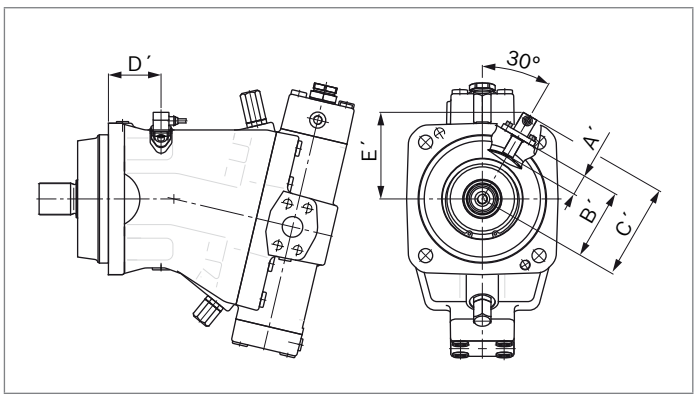

NG			28	250	355	500
Number of teeth			40	78	78	90
DSA	A	Insertion depth (tolerance -0.25)	18.4	1)	1)	1)
	B	Contact surface	61	1)	1)	1)
	C		57.2	1)	1)	1)
HDD	A'	Insertion depth (tolerance ±0.1)	–	32.5	32.5	32.5
	B'	Contact surface	–	110.5	122.5	132.5
	C'		–	149	161	171
	D'		–	82	93	113
	E'		–	135	145	154

1) On request

Installation instructions

General

The axial piston unit must be filled with hydraulic fluid and air bled during commissioning and operation. This must also be observed following a longer standstill as the axial piston unit may empty via the hydraulic lines.
Particularly in the installation position “drive shaft upwards”, filling and air bleeding must be carried out completely as there is, for example, a danger of dry running.
The leakage in the housing area must be directed to the reservoir via the highest drain port (**T_1**, **T_2**).
For combinations of multiple units, make sure that the respective case pressure in each unit is not exceeded. In the event of pressure differences at the drain ports of the units, the shared drain line must be changed so that the maximum permissible case pressure of all connected units is not exceeded at any operational conditions. If this is not possible, separate drain lines must be laid.
To achieve favorable noise values, decouple all connecting lines using elastic elements and avoid above-reservoir installation.
In all operating conditions, the drain line must flow into the reservoir below the minimum fluid level.

Notice

In certain installation positions, an influence on the control characteristic can be expected. Gravity, dead weight and case pressure can cause minor characteristic shifts and changes in response time.

Key	
F	Filling / air bleeding
U	Bearing flushing / air bleed port
T_1, T_2	Drain port
$h_{t\,min}$	Minimum required immersion depth (200 mm)
h_{min}	Minimum required distance to reservoir bottom (100 mm)

Installation position

See the following examples **1** to **8**.
Further installation positions are available upon request.
Recommended installation position: **1** and **2**

Below-reservoir installation (standard)

Below-reservoir installation means that the axial piston unit is installed outside of the reservoir and below the minimum fluid level of the reservoir.

Installation position	Air bleed	Filling
1 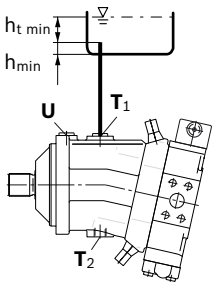		**T_1**
2 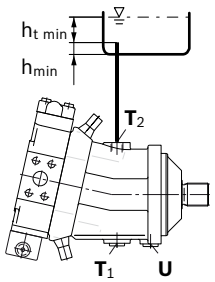		**T_2**
3 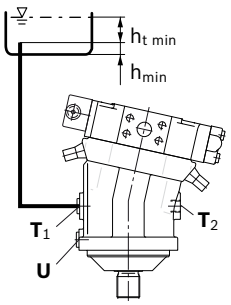		**T_1**
4 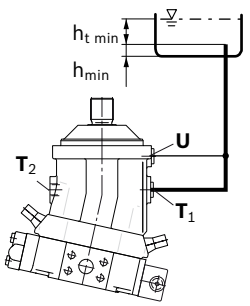	**U**	**T_1**

Above-reservoir installation

Above-reservoir installation means that the axial piston unit is installed above the minimum fluid level of the reservoir.
Recommendation for installation position 8 (drive shaft upward):
A check valve in the reservoir line (cracking pressure 0.5 bar) can prevent draining of the housing area.

Installation position	Air bleed	Filling
5 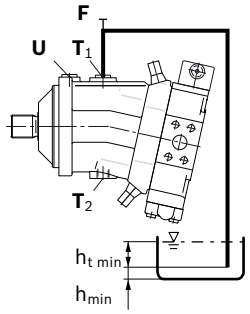	U (F)	T_1 (F)
6 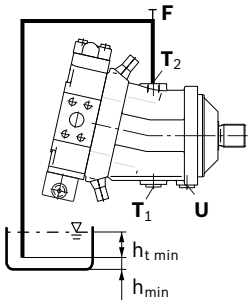	F	T_2 (F)
7 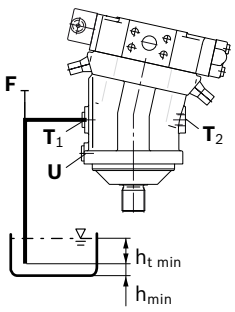	F	T_1 (F)
8 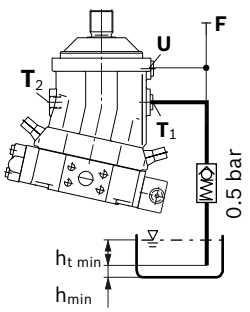	U	T_1 (F)

Notice

Port **F** is part of the external piping and must be provided on the customer side to make filling and air bleeding easier.

3

Europe | RE-2 91304/05 2016 | Bosch Rexroth AG

285

Project planning notes

- The motor A6VM is designed to be used in open and closed circuits.
- The project planning, installation and commissioning of the axial piston unit requires the involvement of qualified skilled personnel.
- Before using the axial piston unit, please read the corresponding instruction manual completely and thoroughly. If necessary, these can be requested from Bosch Rexroth.
- Before finalizing your design, please request a binding installation drawing.
- The specified data and notes contained herein must be observed.
- For safety reasons, controls with beginning of control at $V_{g\,min}$ (e.g., HA) are not permissible for winch drives (e.g. anchor winches)!
- Depending on the operating conditions of the axial piston unit (working pressure, fluid temperature), the characteristic curve may shift.
- Preservation: Our axial piston units are supplied as standard with preservative protection for a maximum of 12 months. If longer preservative protection is required (maximum 24 months), please specify this in plain text when placing your order. The preservation periods apply under optimal storage conditions, details of which can be found in the data sheet 90312 or the instruction manual.
- Not all variants of the product are approved for use in safety functions according to ISO 13849. Please consult the responsible contact person at Bosch Rexroth if you require reliability parameters (e.g. $MTTF_d$) for functional safety.
- Depending on the type of control used, electromagnetic effects can be produced when using solenoids. When a direct current is applied, solenoids do not cause electromagnetic interference nor is their operation impaired by electromagnetic interference.
  Other behavior can result when a modulated direct current (e.g. PWM signal) is applied. Potential electromagnetic interference for persons (e.g. persons with a pacemaker) and other components must be tested by the machine manufacturer.
- Please note the details regarding the tightening torques of port threads and other threaded joints in the instruction manual.
- Working ports:
  - The ports and fastening threads are designed for the specified maximum pressure. The machine or system manufacturer must ensure that the connecting elements and lines correspond to the specified application conditions (pressure, flow, hydraulic fluid, temperature) with the necessary safety factors.
  - The working ports and function ports are only intended to accommodate hydraulic lines.

Safety instructions

- During and shortly after operation, there is a risk of getting burnt on the axial piston unit and especially on the solenoids. Take appropriate safety measures (e.g. by wearing protective clothing).
- Moving parts in control equipment (e.g. valve spools) can, under certain circumstances get blocked in position as a result of contamination (e.g. impure hydraulic fluid, abrasion, or residual dirt from components). As a result, the hydraulic fluid flow and the build-up of torque in the axial piston unit can no longer respond correctly to the operator's specifications. Even the use of various filter elements (external or internal flow filter) will not rule out a fault but merely reduce the risk.
  The machine/system manufacturer must check whether additional measures are required on the machine for the relevant application in order to bring the driven consumer into a safe position (e.g. safe stop) and ensure any measures are properly implemented.
- Moving parts in high-pressure relief valves may in certain circumstances become stuck in an undefined position due to contamination (e.g. contaminated hydraulic fluid). This can result in restriction or loss of the load holding function in lifting winches.
  The machine/system manufacturer must check whether additional measures are required on the machine for the relevant application in order to keep the load in a safe position and ensure they are properly implemented.
- When using the axial piston motor in winch drives, make certain that the technical limit values are not exceeded under all operating conditions. If the axial piston motor is extremely overloaded (e.g., if the maximum permissible rotational speeds are exceeded during weighing of the anchor while the ship is in motion), the rotary group may be damaged and, in the worst case, the axial piston motor may burst. The machine manufacturer / system manufacturer is to undertake additional measures, up to and including encapsulation.

Axial piston variable motor
A6VM series 65

RE 91607

- All-purpose high pressure motor
- Sizes 55 to 200
- Nominal pressure 400 bar
- Maximum pressure 450 bar
- Open and closed circuits

Features

- Robust motor with long service life
- Approved for very high rotational speeds
- High control range (can be swiveled to zero)
- High torque
- Variety of controls
- Optionally with flushing and boost-pressure valve mounted
- Optionally with mounted high-pressure counterbalance valve
- Bent-axis design

Contents

Ordering code	2
Hydraulic fluids	6
Flow direction	7
Shaft seal	7
Operating pressure range	8
Technical data	9
HP – Proportional hydraulic control	11
EP – Proportional electric control	14
HZ – Two-point hydraulic control	16
EZ – Two-point electric control	17
HA – Automatic high-pressure related control	18
DA – Automatic speed-related control	23
Electric travel direction valve (for DA, HA.R)	25
Dimensions size 55 to 200	26
Connector for solenoids	62
Neutral position switch	63
Flushing and boost pressure valve	64
Counterbalance valve BVD and BVE	66
Speed sensor	69
Setting range for displacement	70
Installation instructions	72
Project planning notes	74
Safety instructions	75

RE 91607/06.2015 Bosch Rexroth AG

Ordering code

01	02	03	04	05	06	07	08	09	10		11	12	13	14	15	16	17	18	19	20		21
A6V	**M**						**0**			**/**	**65**	**M**	**W**	**V**	**0**						**–**	

Axial piston unit

01	Bent-axis design, variable, nominal pressure 400 bar, maximum pressure 450 bar	**A6V**

Operating mode

02	Motor	**M**

Size (NG)

03	Geometric displacement, see technical data on page 9	**055**	**080**	**107**	**140**	**160**	**200**	

Control device				**055**	**080**	**107**	**140**	**160**	**200**	
04	Proportional control hydraulic	positive control	Δp_{St} = 10 bar	●	●	●	●	●	●	**HP1**
			Δp_{St} = 25 bar	●	●	●	●	●	●	**HP2**
		negative control	Δp_{St} = 10 bar	●	●	●	●	●	●	**HP5**
			Δp_{St} = 25 bar	●	●	●	●	●	●	**HP6**
	Proportional control electrical	positive control	U = 12 V DC	●	●	●	●	●	●	**EP1**
			U = 24 V DC	●	●	●	●	●	●	**EP2**
		negative control	U = 12 V DC	●	●	●	●	●	●	**EP5**
			U = 24 V DC	●	●	●	●	●	●	**EP6**
	Two-point control hydraulic	negative control		–	–	–	●	●	●	**HZ5**
				●	●	●	–	–	–	**HZ7**
	Two-point control electrical	negative control	U = 12 V DC	–	–	–	●	●	●	**EZ5**
			U = 24 V DC	–	–	–	●	●	●	**EZ6**
			U = 12 V DC	●	●	●	–	–	–	**EZ7**
			U = 24 V DC	●	●	●	–	–	–	**EZ8**
	Automatic control high-pressure related, Positive control	with minimum pressure increase	Δp ≤ approx. 10 bar	●	●	●	●	●	●	**HA1**
		with pressure increase	Δp = 100 bar	●	●	●	●	●	●	**HA2**
	Automatic control speed related, negative control p_{St} / p_{HD} = 5/100	hydr. travel direction valve		●	●	●	●	●	●	**DA0**
		electric travel direction valve + electric $V_{g\,max}$ circuit	U = 12 V DC	●	●	●	●	●	●	**DA1**
			U = 24 V DC	●	●	●	●	●	●	**DA2**

Pressure control/override				**055**	**080**	**107**	**140**	**160**	**200**	
05	Without pressure control/override			●	●	●	●	●	●	**00**
	Pressure control fixed setting, only for HP5, HP6, EP5 and EP6			●	●	●	●	●	●	**D1**
	Override of controls HA1 and HA2	hydraulic remote control, proportional		●	●	●	●	●	●	**T3**
		electric, two-point	U = 12 V DC	●	●	●	●	●	●	**U1**
			U = 24 V DC	●	●	●	●	●	●	**U2**
		electric and travel direction valve, electric	U = 12 V DC	●	●	●	●	●	●	**R1**
			U = 24 V DC	●	●	●	●	●	●	**R2**

Connector for solenoids[1] (see page 62)

06	Without connector (without solenoid, only for hydraulic control)	**0**
	DEUTSCH - molded connector, 2-pin, without suppressor diode	**P**

● = Available ○ = On request – = Not available

1) Connectors for other electric components can deviate.

01	02	03	04	05	06	07	08	09	10		11	12	13	14	15	16	17	18	19	20		21
A6V	M						0			/	65	M	W	V	0						–	

Neutral position switch

		055	080	107	140	160	200	
07	Without additional function	●	●	●	●	●	●	0
	Neutral position switch	–	●	●	●	●	●	N

Additional function

08	Without additional function	0

Response time damping (for selection, see control)

09	Without damping (standard with HP and EP)		0
	Damping	HP, EP, HP5,6D. and EP5,6D., HZ, EZ, HA with counterbalance valve BVD/BVE	1
		One-sided in inlet to large stroking chamber (HA)	4
		One-sided in outlet from large stroking chamber (DA)	7

Setting range for displacement[2)]

	$V_{g\,max}$-setting screw	$V_{g\,min}$-setting screw	055	080	107	140	160	200	
10	Without setting screw	short (0-adjustable)	●	●	●	●	●	●	A
		medium	●	●	●	●	●	●	B
		long	●	●	●	●	●	●	C
		extra long	–	–	●	●	●	●	D
	Short	short (0-adjustable)	●	●	●	●	●	●	E
		medium	●	●	●	●	●	●	F
		long	●	●	●	●	●	●	G
		extra long	–	–	●	●	●	●	H
	Medium	short (0-adjustable)	●	●	●	●	●	●	J
		medium	●	●	●	●	●	●	K
		long	●	●	●	●	●	●	L
		extra long	–	–	●	●	●	●	M

Series

11	Series 6, index 5	65

Configuration of ports and fastening threads

12	Metric, port threads with O-ring sealing according to ISO 6149	M

Direction of rotation

13	Viewed on drive shaft, bidirectional	W

Sealing material

14	FKM (fluoroelastomer)	V

Drive shaft bearing

15	Standard bearing	0

Mounting flange

			055	080	107	140	160	200	
16	ISO 3019-2	125-4	●	–	–	–	–	–	M4
		140-4	–	●	–	–	–	–	N4
		160-4	–	–	●	–	–	–	P4
		180-4	–	–	–	●	●	–	R4
		200-4	–	–	–	–	–	●	S4

● = Available ○ = On request – = Not available

2) The settings for the setting screws can be found in the table (see pages 70 and 71).

Ordering code

01	02	03	04	05	06	07	08	09	10		11	12	13	14	15	16	17	18	19	20		21
A6V	**M**						**0**			**/**	**65**	**M**	**W**	**V**	**0**						**–**	

Drive shaft			055	080	107	140	160	200	
17	Splined shaft ANSI B92.1a	1 1/4 in 14T 12/24 DP	●	●	–	–	–	–	**S7**
		1 3/4 in 13T 8/16 DP	–	–	●	●	●	–	**T1**
		2 in 15T 8/16 DP	–	–	–	–	–	●	**T2**
	Splined shaft DIN 5480	W30x2x14x9g	●	–	–	–	–	–	**Z6**
		W35×2×16×9g	●	●	–	–	–	–	**Z8**
		W40×2×18×9g	–	●	●	–	–	–	**Z9**
		W45×2×21×9g	–	–	●	●	●	–	**A1**
		W50×2×24×9g	–	–	–	–	●	●	**A2**

Working port			055	080	107	140	160	200	
18	SAE working ports **A** and **B** at rear		●	●	●	●	●	●	**1**
	SAE working ports **A** and **B** at side, opposite		●	●	●	●	●	●	**2**
	Port plate with 1-stage pressure limitation valves for mounting a counterbalance valve[3]	BVD20	●	●	●	–	–	–	**7**
		BVD25, BVE25	–	–	●	●	●	●	**8**

Valve (see pages 64 to 68)			055	080	107	140	160	200	
19	Without valve		●	●	●	●	●	●	**0**
	With counterbalance valve BVD/BVE mounted[4]		●	●	●	●	●	●	**W**
	With flushing and boost pressure valve, mounted Flushing on both sides Flushing flow at: $\Delta p = p_{ND} - p_G = 25$ bar and $v = 10$ mm²/s (p_{ND} = low pressure, p_G = case pressure) Only possible with port plates 1 and 2	**Flushing flow q_v [l/min]**							
		3.5	●	●	●	–	–	–	**A**
		5	●	●	●	–	–	–	**B**
		8	●	●	●	●	●	●	**C**
		10	●	●	●	●	●	●	**D**
		14	●	●	●	–	–	–	**F**
		17	–	–	–	●	●	●	**G**
		20	–	–	●[5]	●	●	●	**H**
		25	–	–	●[5]	●	●	●	**J**
		30	–	–	●[5]	●	●	●	**K**
		35	–	–	–	●	●	●	**L**
		40	–	–	–	●	●	●	**M**

● = Available ○ = On request – = Not available

3) Only possible in combination with HP, EP and HA control. Note the restrictions described on page 66.

4) State ordering code for counterbalance valve separately in accordance with data sheet 95522 – BVD or 95525 – BVE. Note the restrictions described on page 66.

5) Not for EZ7, EZ8 and HZ7.

01	02	03	04	05	06	07	08	09	10		11	12	13	14	15	16	17	18	19	20		21
A6V	**M**					**0**	**0**			**/**	**65**	**M**	**W**	**V**	**0**						**–**	

Speed sensor (see page 69)

		055	080	107	140	160	200	
20	Without speed sensor	●	●	●	●	●	●	**0**
	Prepared with speed sensor DSM/DSA	●	●	●	●	●	●	**U**
	With speed sensor DSM/DSA mounted[6)]	●	●	●	●	●	●	**V**

Standard / special version

21	Standard version	**0**
	Standard version with installation variants, e.g. **T** ports against standard open and closed	**Y**
	Special version	**S**

● = Available ○ = On request – = Not available

Notice

▶ Note the project planning notes on page 74.

6) State ordering code for sensor separately in accordance with data sheet 95132 – DSM or 95133 – DSA and note the requirements relating to the electronics.

Hydraulic fluids

The variable motor A6VM is designed for operation with mineral oil HLP according to DIN 51524.
Application instructions and requirements for hydraulic fluids should be taken from the following data sheets before the start of project planning:

- 90220: Hydraulic fluids based on mineral oils and related hydrocarbons
- 90221: Environmentally acceptable hydraulic fluids
- 90222: Fire-resistant, water-free hydraulic fluids (HFDR/HFDU)
- 90223: Fire-resistant, water-containing hydraulic fluids (HFC, HFB)
- 90225: Axial piston units for operation with water-free and water-containing fire-resistant hydraulic fluids (HFDR, HFDU, HFB, HFC).

The variable motor A6VM is not suitable for operation with HFA fluids. If operating with HFB-, HFC- and HFD or environmentally acceptable hydraulic fluids, the limitations regarding technical data or other seals must be observed.

Notes on selection of hydraulic fluid
The hydraulic fluid should be selected such that the operating viscosity in the operating temperature range is withinthe optimum range (v_{opt} see selection diagram).

Note
At no point of the component may the temperature be higher than 115 °C. The temperature difference specified in the table is to be taken into account when determining the viscosity in the bearing.
If the above conditions cannot be maintained due to extreme operating parameters, we recommend the use of a flushing and boost-pressure valve (see page 64).

Viscosity and temperature of hydraulic fluids

	Viscosity	Temperature	Comment
Cold start[1)]	$v_{min} \geq 1600$ mm²/s	$\theta_{St} \geq$ -40 °C	$t \leq 3$ min, $n \leq 1000$ rpm, without load $p \leq 50$ bar
Permissible temperature difference		$\Delta T \leq$ 25 K	between axial piston unit and hydraulic fluid in the system
Warm-up phase	$v =$ 1600 to 400 mm²/s	$\theta =$ -40 °C to -25 °C	at $p \leq 0.7 \times p_{nom}$, $n \leq 0.5 \times n_{nom}$ and $t \leq 15$ min
Continuous operation	$v =$ 400 to 10 mm²/s		This corresponds, for example on the VG 46, to a temperature range of +5 °C to +85 °C (see selection diagram)
		$\theta =$ -25 °C to +103 °C	measured at port **T** Note the permissible temperature range of the shaft seal (ΔT = approx. 12 K between the bearing/shaft seal and port **T**)
	v_{opt} = 36 to 16 mm²/s		Range of optimum operating viscosity and efficiency
Short-term operation	$v_{min} \geq 7$ mm²/s		$t < 3$ min, $p < 0.3 \times p_{nom}$

1) For application cases below -25 °C, an NBR shaft seal is required (permissible temperature range -40 °C to +90 °C).

▼ **Selection diagram**

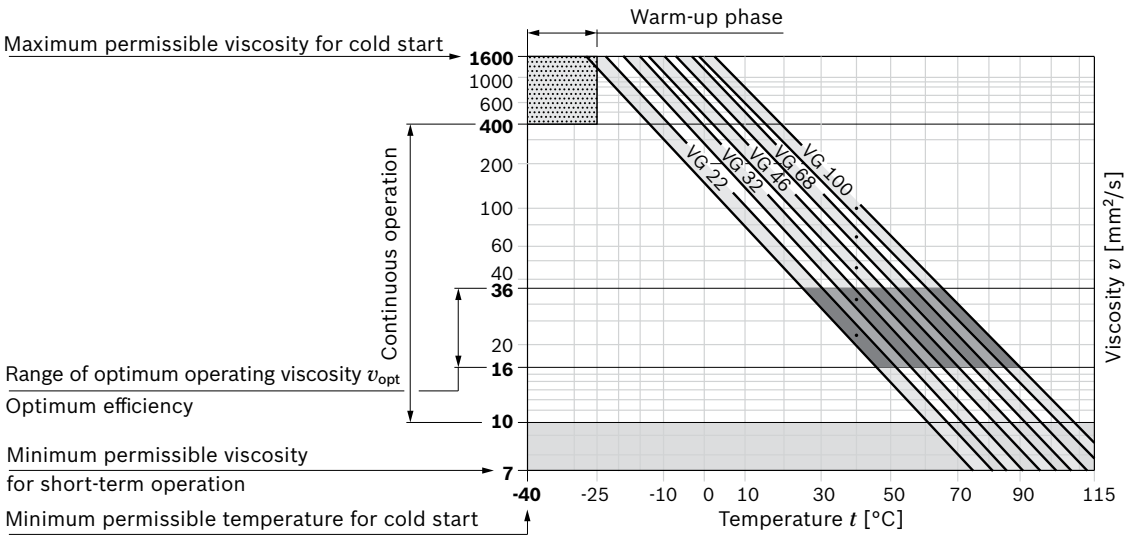

Filtration of the hydraulic fluid

Finer filtration improves the cleanliness level of the hydraulic fluid, which increases the service life of the axial piston unit.

A cleanliness level of at least 20/18/15 is to be maintained according to ISO 4406.

At very high hydraulic fluid temperatures (90 °C to maximum 103 °C, measured at port **T**), a cleanliness level of at least 19/17/14 according to ISO 4406 is necessary.

Influence of case pressure on beginning of control

An increase in case pressure affects the beginning of control of the variable motor when using the following control options:

- HP, HA.T3: increase
- DA: decrease

With the following settings, an increase in case pressure will have no effect on the beginning of control:

HA.R and HA.U, EP, HA

The factory setting of the beginning of control is made at p_{abs} = 2 bar case pressure.

Flow direction

Direction of rotation, viewed on drive shaft	
cw	ccw
A to **B**	**B** to **A**

Shaft seal

Permissible pressure loading

The service life of the shaft seal will be influenced by the speed of the axial piston unit and the leakage pressure in the housing (case pressure). Momentary pressure spikes (t < 0.1 s) of up to 10 bar are permitted. Case pressures of a continuous 2 bar maximum are permitted to be able to utilize the entire speed range. Higher case pressures are permissible at lower rotational speeds (see diagram). The service life of the shaft seal decreases with increasing frequency of pressure spikes and increasing mean differential pressure.

The case pressure must be equal to or higher than the ambient pressure.

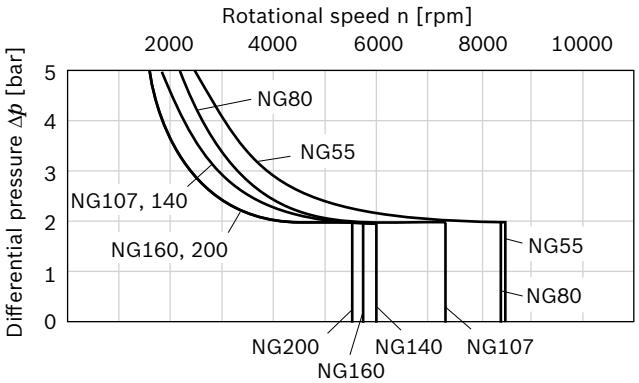

The FKM shaft seal may be used for leakage temperatures from -25 °C to +115 °C. For application cases below -25 °C, an NBR shaft seal is required (permissible temperature range: -40 °C to +90 °C).

Operating pressure range

Pressure at service line port A or B		Definition
Nominal pressure p_{nom}	400 bar	The nominal pressure corresponds to the maximum design pressure.
Maximum pressure p_{max}	450 bar	The maximum pressure corresponds to the maximum operating pressure within the single operating period. The sum of the single operating periods must not exceed the total operating period.
Single operating period	10 s	
Total operating period	300 h	
Minimum pressure (high-pressure side)	25 bar absolute	Minimum pressure at the high-pressure side (**A** or **B**) which is required in order to prevent damage to the axial piston unit.
Minimum pressure – pump operating mode (inlet)	See the diagram below	To prevent damage to the axial piston motor in pump operating mode (change of high-pressure side with unchanged direction of rotation, e.g. when braking), a minimum pressure must be guaranteed at the service line port (inlet). This minimum pressure is dependent on the speed and displacement of the axial piston unit (see characteristic curve)
Summation pressure p_{Su} (pressure **A** + pressure **B**)	700 bar	The summation pressure is the sum of the pressures at both service line ports (**A** and **B**)
Rate of pressure change $R_{A\,max}$		Maximum permissible rate of pressure build-up and reduction during a pressure change over the entire pressure range.
With integrated pressure-relief valve	9000 bar/s	
Without pressure-relief valve	16000 bar/s	

▼ **Rate of pressure change $R_{A\,max}$**

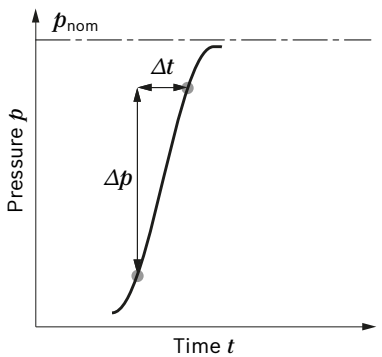

▼ **Pressure definition**

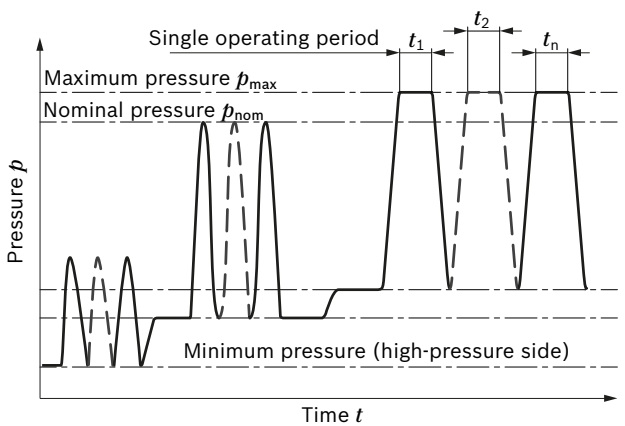

Total operating period = $t_1 + t_2 + ... + t_n$

▼ **Minimum pressure – pump operating mode (inlet)**

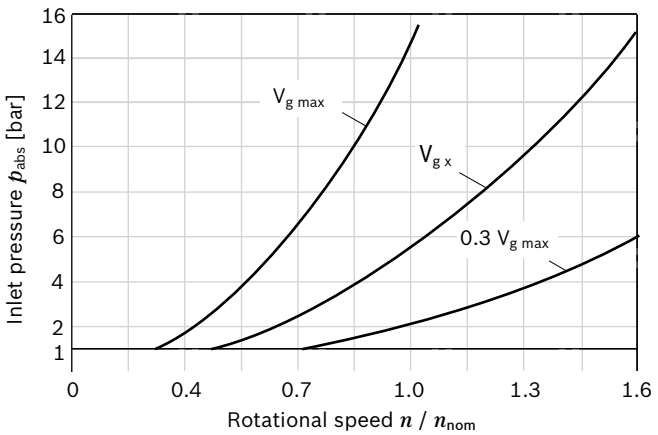

This diagram is valid only for the optimum viscosity range from ν_{opt} = 36 to 16 mm²/s.
Please contact us if these conditions cannot be satisfied.

Notice
Operating pressure range valid when using hydraulic fluids based on mineral oils. Values for other hydraulic fluids, please contact us.

Technical data

Size		NG		55	80	107	140	160	200
Displacement geometric, per revolution		$V_{g\,max}$	cm³	54.8	80	107	140	160	200
		$V_{g\,min}$	cm³	0	0	0	0	0	0
		$V_{g\,x}$	cm³	35	51	68	88	61	76
Maximum speed[1] (complying with the maximum permissible inlet flow)	at $V_{g\,max}$	n_{nom}	rpm	4450	3900	3550	3250	3100	2900
	at $V_g < V_{g\,x}$ (see diagram)	n_{max}	rpm	7000	6150	5600	5150	4900	4600
	at $V_{g\,0}$	n_{max}	rpm	8350	7350	6300	5750	5500	5100
Inlet flow[2]	at n_{nom} and $V_{g\,max}$	$q_{v\,max}$	l/min	244	312	380	455	496	580
Torque[3]	at $V_{g\,max}$ and Δp = 400 bar	T	Nm	349	509	681	891	1019	1273
Rotary stiffness	$V_{g\,max}$ to $V_g/2$	c_{min}	kNm/rad	10	16	21	34	35	44
	$V_g/2$ to 0 (interpolated)	c_{min}	kNm/rad	32	48	65	93	105	130
Moment of inertia for rotary group		J_{TW}	kgm²	0.0042	0.008	0.0127	0.0207	0.0253	0.0353
Maximum angular acceleration		α	rad/s²	31500	24000	19000	11000	11000	11000
Case volume		V	l	0.75	1.2	1.5	1.8	2.4	2.7
Weight, approx.		m	kg	28	36	46	61	62	78

Speed range

The minimum rotational speed n_{min} is not limited. For applications with requirements on the evenness of the rotation at low rotational speeds, please contact us.

Notice

- Theoretical values, without efficiency levels and tolerances; values rounded
- Operation above the maximum values or below the minimum values may result in a loss of function, a reduced service life or in the destruction of the axial piston unit. Other permissible limit values, such as speed variation, reduced angular acceleration as a function of the frequency and the permissible angular acceleration at start (lower than the maximum angular acceleration) can be found in data sheet 90261.

Permissible displacement in relation to speed

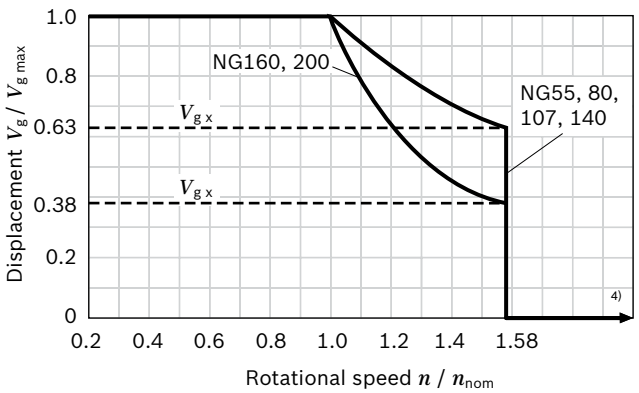

Determining the operating characteristics				
Inlet flow	q_v	$= \frac{V_g \times n}{1000 \times \eta_v}$		[l/min]
Rotational speed	n	$= \frac{q_v \times 1000 \times \eta_v}{V_g}$		[rpm]
Torque	T	$= \frac{V_g \times \Delta p \times \eta_{mh}}{20 \times \pi}$		[Nm]
Power	P	$= \frac{2\pi \times T \times n}{60000}$	$= \frac{q_v \times \Delta p \times \eta_t}{600}$	[kW]

Key

V_g	=	Displacement per revolution [cm³]
Δp	=	Differential pressure [bar]
n	=	Rotational speed [rpm]
η_v	=	Volumetric efficiency
η_{mh}	=	Mechanical-hydraulic efficiency
η_t	=	Total efficiency ($\eta_t = \eta_v \bullet \eta_{mh}$)

1) The values are valid:
   – for the optimum viscosity range from ν_{opt} = 36 to 16 mm²/s
   – with hydraulic fluid based on mineral oils
2) Observe limitation of input flow due to counterbalance valve (see page 66).
3) Torque without radial force, With radial force see page 10.
4) Values in this range on request

Permissible radial and axial forces of the drive shafts

Size	NG		55	80	107	140	160	200
Drive shaft		in	1 1/4	1 1/4	1 3/4	1 3/4	1 3/4	2
Maximum radial force at distance a (from shaft collar) 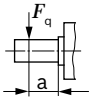	$F_{q\,max}$	N	7811	7559	12256	16036	14488	20047
	a	mm	24.0	24.0	33.5	33.5	33.5	33.5
Maximum torque at $F_{q\,max}$	$T_{q\,max}$	Nm	310	300	681	891	920	1273
Maximum differential pressure at V_{gmax} and $F_{q\,max}$	$\Delta p_{q\,max}$	bar	315	236	400	400	361	400
Maximum axial force at standstill or depressurized operation 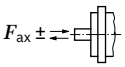	+ $F_{ax\,max}$	N	0	0	0	0	0	0
	− $F_{ax\,max}$	N	500	710	900	1030	1120	1250
Permissible axial force per bar operating pressure	+ $F_{ax\,zul/bar}$	N/bar	7.5	9.6	11.3	13.3	15.1	17.0

Size	NG		55	55	80	80	107	107	140	160	160	200
Drive shaft	ø	mm	W30	W35	W35	W40	W40	W45	W45	W45	W50	W50
Maximum radial force at distance a (from shaft collar) 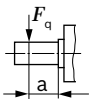	$F_{q\,max}$	N	7581	8069	10867	10283	13758	12215	15982	18278	16435	20532
	a	mm	17.5	20.0	20.0	22.5	22.5	25.0	25.0	25.0	27.5	27.5
Maximum torque at $F_{q\,max}$	$T_{q\,max}$	Nm	281	349	470	509	681	681	891	1019	1019	1273
Maximum differential pressure at V_{gmax} and $F_{q\,max}$	$\Delta p_{q\,max}$	bar	322	400	369	400	400	400	400	400	400	400
Maximum axial force at standstill or depressurized operation 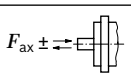	+ $F_{ax\,max}$	N	0	0	0	0	0	0	0	0	0	0
	− $F_{ax\,max}$	N	500	500	710	710	900	900	1030	1120	1120	1250
Permissible axial force per bar operating pressure	+ $F_{ax\,zul/bar}$	N/bar	7.5	7.5	9.6	9.6	11.3	11.3	13.3	15.1	15.1	17.0

Effect of radial force F_q on the service life of bearings

By selecting a suitable direction of radial force F_q, the load on the bearings, caused by the internal rotary group forces can be reduced, thus optimizing the service life of the bearings. Recommended position of mating gear is dependent on direction of rotation. Examples:

Notice

- The values given are maximum values and do not apply to continuous operation.
- The permissible axial force in direction $-F_{ax}$ is to be avoided as the lifetime of the bearing is reduced.
- Special requirements apply in the case of belt drives. Please contact us.

▼ **Toothed gear output drive**

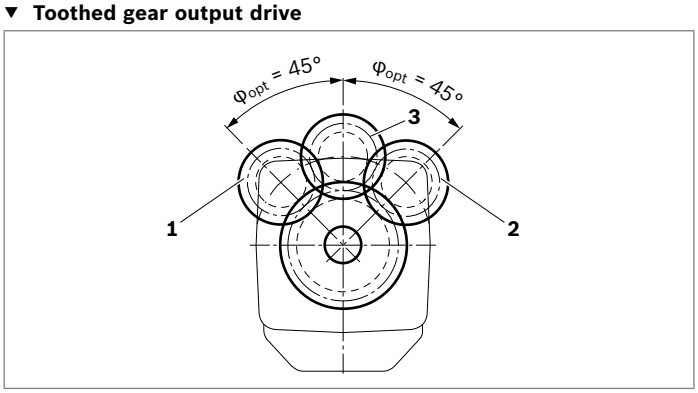

1 Direction of rotation “counter-clockwise”, pressure at port **A**
2 Direction of rotation “clockwise”, pressure at port **B**
3 Alternating direction of rotation

HP – Proportional hydraulic control

The proportional hydraulic control provides infinite adjustment of the displacement. Control is proportional to the pilot pressure applied to port **X**.

HP1, HP2 positive control

- Beginning of control at $V_{g\,min}$ (minimum torque, maximum permissible speed at minimum pilot pressure)
- End of control at $V_{g\,max}$ (maximum torque, minimum speed at maximum pilot pressure)

HP5, HP6 negative control

- Beginning of control at $V_{g\,max}$ (maximum torque, minimum speed at minimum pilot pressure)
- End of control at $V_{g\,min}$ (minimum torque, maximum permissible speed at maximum pilot pressure)

Notice

- Maximum permissible pilot pressure: p_{St} = 100 bar
- The control oil is internally taken out of the high pressure side of the motor (**A** or **B**). For reliable control, a working pressure of at least 30 bar is required in **A** (**B**). If a control operation is performed at a working pressure < 30 bar, an auxiliary pressure of at least 30 bar must be applied at port **G** using an external check valve. For lower pressures, please contact us.
  Bear in mind that pressures up to 450 bar can occur at port **G**.
- Specify the desired beginning of control in plain text when ordering, e.g.: beginning of control at 10 bar.
- The beginning of control and the HP charakteristic curve are influenced by the case pressure. An increase in case pressure causes an increase in the beginning of control (see page 7) and thus a parallel shift of the characteristic.
- A leakage flow of maximum 0.3 l/min can occur at port **X** due to internal leakage (working pressure > pilot pressure). The control is to be suitably configured to avoid an independent build-up of pilot pressure.

Response time damping

The response time damping impacts the swivel behavior of the motor and consequently the machine response speed.

Standard for sizes 55 to 200

HP without damping.

HP.D with throttle pin on both sides, symmetrical (see table)

Optional for sizes 55 to 200

HP with throttle pin on both sides, symmetrical (see table)

▼ **Throttle pin overview**

Size	55	80	107	140	160	200
Groove size [mm]	0.45	0.45	0.55	0.55	0.55	0.65

HP1, HP5 pilot pressure increase Δp_{St} = 10 bar

HP1 positive control

A pilot pressure increase of 10 bar at port **X** results in an increase in displacement from $V_{g\,min}$ to $V_{g\,max}$.

HP5 negative control

A pilot pressure increase of 10 bar at port **X** results in a decrease in displacement from $V_{g\,max}$ to $V_{g\,min}$.

Beginning of control, setting range 2 to 20 bar

Standard setting: beginning of control at 3 bar (end of control at 13 bar)

▼ **Characteristic curve**

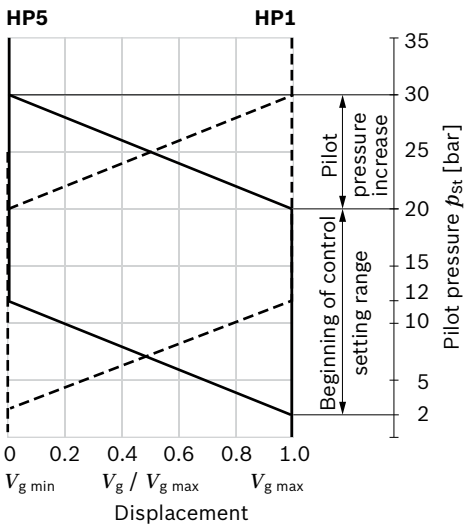

HP2, HP6 pilot pressure increase Δp_{St} = 25 bar

HP2 positive control

A pilot pressure increase of 25 bar at port **X** results in an increase in displacement from $V_{g\,min}$ to $V_{g\,max}$.

HP6 negative control

A pilot pressure increase of 25 bar at port **X** results in a decrease in displacement from $V_{g\,max}$ to $V_{g\,min}$.

Beginning of control, setting range 5 to 35 bar

Standard setting:

beginning of control at 10 bar (end of control at 35 bar)

▼ **Characteristic curve**

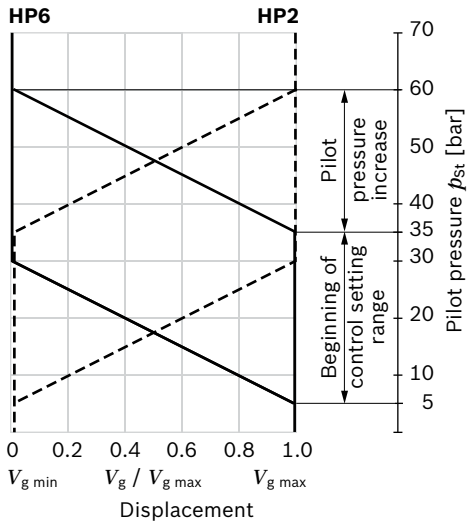

▼ **Circuit diagram HP1, HP2 (positive control)**

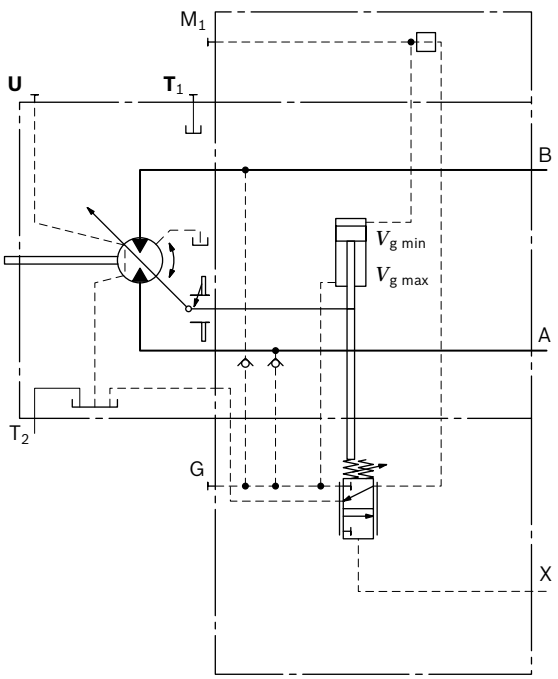

▼ **Circuit diagram HP5, HP6 (negative control)**

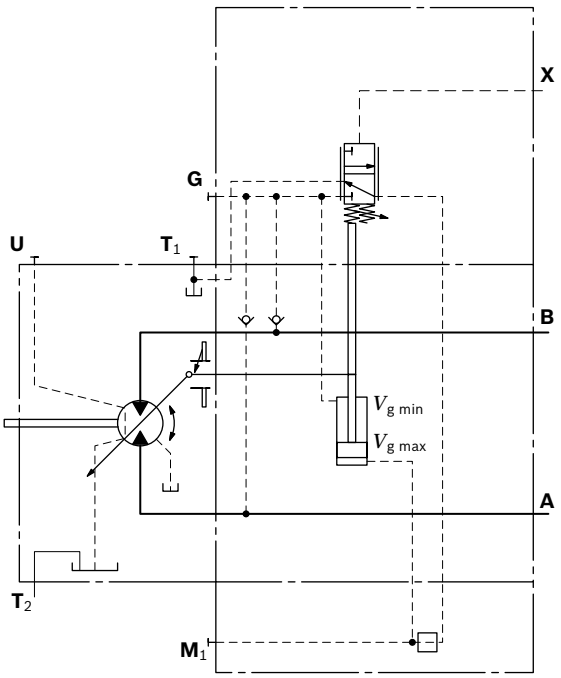

HP5D1, HP6D1 Pressure control, fixed setting

The pressure control overrides the HP control function.
If the load torque or a reduction in motor swivel angle causes the system pressure to reach the setpoint value of the pressure control, the motor will swivel towards a larger displacement.
The increase in the displacement and the resulting reduction in pressure cause the control deviation to decrease.
With the increase in displacement the motor develops more torque, while the pressure remains constant.
Setting range of the pressure control valve 80 to 400 bar

▼ **Circuit diagram HP5D1, HP6D1 (negative control)**

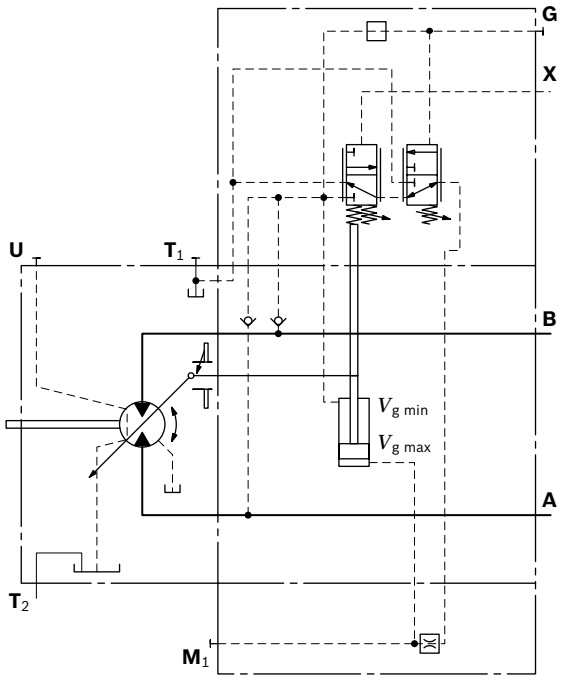

EP – Proportional electric control

The proportional electric control, type EP, provides infinite adjustment of the displacement, proportional to the control current applied to the solenoid.

EP1, EP2 positive control

- Beginning of control at $V_{g\,min}$ (minimum torque, maximum permissible speed at minimum control current)
- End of control at $V_{g\,max}$ (maximum torque, minimum speed at maximum control current)

EP5, EP6 negative control

- Beginning of control at $V_{g\,max}$ (maximum torque, minimum speed at minimum control current)
- End of control at $V_{g\,min}$ (minimum torque, maximum permissible speed at maximum control current)

▼ **Characteristic curve**

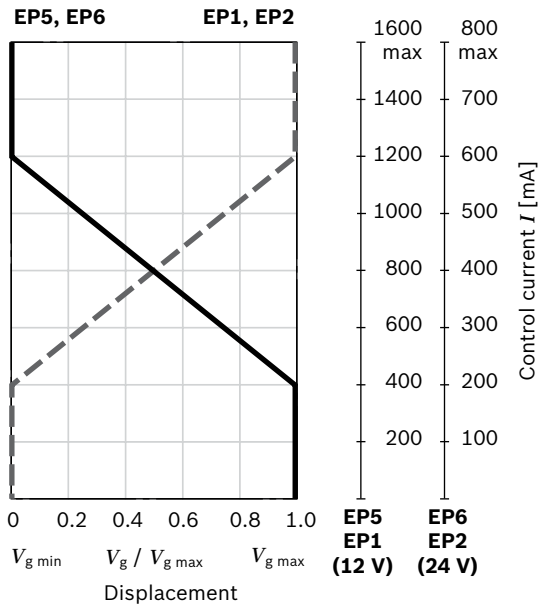

Notice

The control oil is internally taken from the high pressure side of the motor (**A** or **B**). For reliable control, an operating pressure of at least 30 bar is required in **A** (**B**). If a control operation is performed at an operating pressure < 30 bar, an auxiliary pressure of at least 30 bar must be applied at port **G** via an external check valve. For lower pressures, please contact us.

Please note that pressures up to 450 bar can occur at port **G**.

Response time damping

The response time damping impacts the swivel behavior of the motor and consequently the machine response speed.

Standard for sizes 55 to 200

EP without damping.

EP.D with throttle pin on both sides, symmetrical (see table)

Optional for sizes 55 to 200

EP with throttle pin on both sides, symmetrical (see table)

▼ **Throttle pin overview**

Size	55	80	107	160	200
Groove size [mm]	0.45	0.45	0.55	0.55	0.65

Technical data, solenoid	EP1, EP5	EP2, EP6
Voltage	12 V (±20%)	24 V (±20%)
Control current		
Beginning of control	400 mA	200 mA
End of control	1200 mA	600 mA
Current limit	1.54 A	0.77 A
Nominal resistance (at 20 °C)	5.5 Ω	22.7 Ω
Dither		
Frequency	100 Hz	100 Hz
Minimum oscillation range[1)]	240 mA	120 mA
Duty cycle	100%	100%
Type of protection: see connector version on page 62		

Various BODAS controllers with application software and amplifiers are available for controlling the proportional solenoids.

1) Minimum required oscillation range of the control current $\Delta I_{p\text{-}p}$ (peak to peak) within the respective control range (start of control to end of control)

▼ **Circuit diagram EP1, EP2 (positive control)**

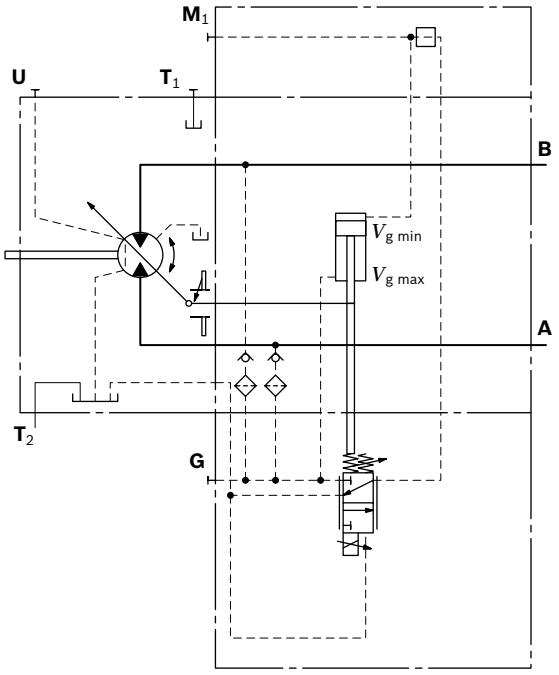

▼ **Circuit diagram EP5, EP6 (negativ control)**

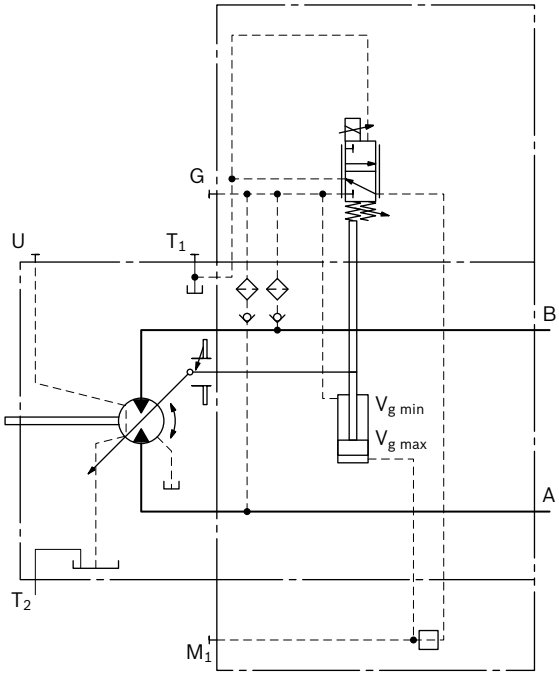

EP5D1, EP6D1 Pressure control, fixed setting

The pressure control overrides the EP control function. If the load torque or a reduction in motor swivel angle causes the system pressure to reach the setpoint value of the pressure control, the motor will swivel towards a larger displacement.

The increase in the displacement and the resulting reduction in pressure cause the control deviation to decrease. With the increase in displacement the motor develops more torque, while the pressure remains constant.

Setting range of the pressure control valve 80 to 400 bar

▼ **Circuit diagram EP5D1, EP6D1 (negativ control)**

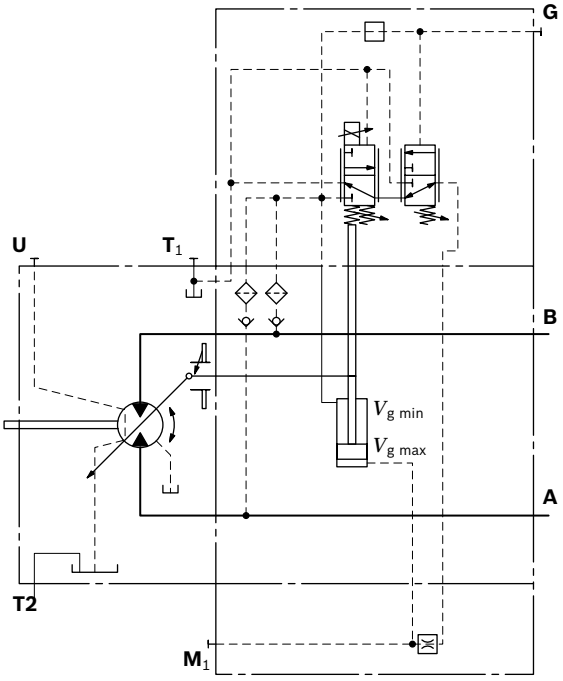

3

HZ – Two-point hydraulic control

The two-point hydraulic control allows the displacement to be set to either $V_{g\,min}$ or $V_{g\,max}$ by switching the pilot pressure at port **X** on or off.

HZ5, HZ7 negative control

- Position at $V_{g\,max}$ (without pilot pressure, maximum torque, minimum speed)
- Position at $V_{g\,min}$ (with pilot pressure > 15 bar activated, minimum torque, maximum permissible speed)

▼ **Characteristic curve HZ5, HZ7**

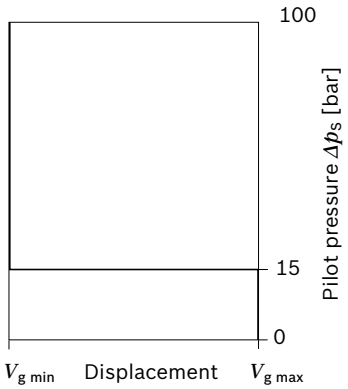

Notice

- Maximum permissible pilot pressure: 100 bar
- The control oil is internally taken out of the high pressure side of the motor (**A** or **B**). For reliable control, an operating pressure of at least 30 bar is required in **A** (**B**). If a control operation is performed at an operating pressure < 30 bar, an auxiliary pressure of at least 30 bar must be applied at port **G** via an external check valve. For lower pressures, please contact us.
  Please note that pressures up to 450 bar can occur at port **G**.
- At port **X** a leakage flow of maximum 0.3 l/min occurs (working pressure > pilot pressure). To avoid a build-up of pilot pressure, pressure is to be relieved from port **X** to the reservoir.

Response time damping

The response time damping impacts the swivel behavior of the motor and consequently the machine response speed.

Standard for sizes 140 to 200

HZ5 with throttle pin on both sides, symmetrical (see table)

Standard for sizes 55 to 107

HZ7 (synchronous piston) with throttle pin on both sides, symmetrical (see table)

▼ **Throttle pin overview**

Size	55	80	107	140	160	200
Groove size [mm]	0.30	0.30	0.30	0.55	0.55	0.65

▼ **Circuit diagram HZ5 (negative control) sizes 140 and 200**

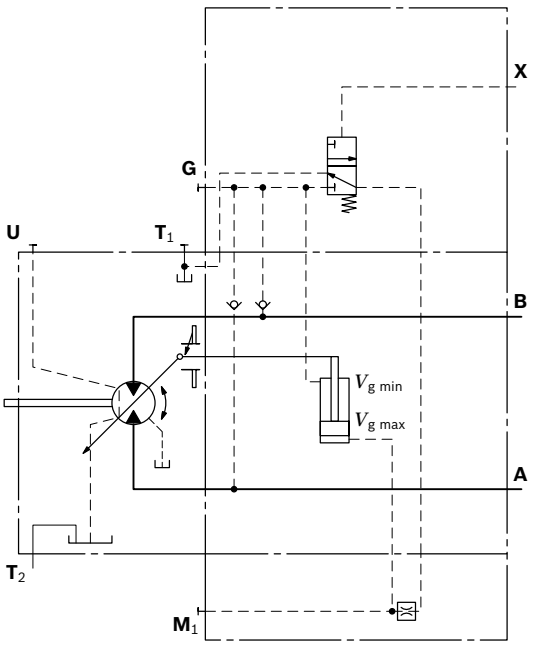

▼ **Circuit diagram HZ7 (negative Kennung) Nenngröße 55 bis 107**

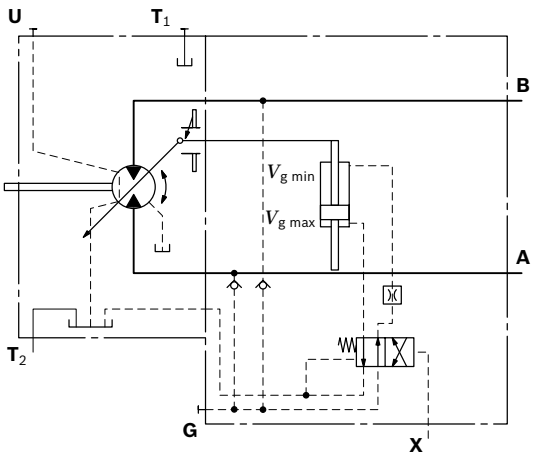

EZ – Two-point electric control

The two-point electric control allows the displacement to be set to either $V_{g\,min}$ or $V_{g\,max}$ by switching the electric current to a switching solenoid on or off.

Notice

The control oil is internally taken out of the high pressure side of the motor (**A** or **B**). For reliable control, an operating pressure of at least 30 bar is required in **A** (**B**). If a control operation is performed at an operating pressure < 30 bar, an auxiliary pressure of at least 30 bar must be applied at port **G** via an external check valve. For lower pressures, please contact us.
Please note that pressures up to 450 bar can occur at port **G**.

Response time damping

The response time damping impacts the swivel behavior of the motor and consequently the machine response speed.

Standard for sizes 140 to 200

EZ5, EZ6 with throttle pin on both sides, symmetrical (see table)

Standard for sizes 55 to 107

EZ7, EZ8 (synchronous piston) with throttle pin on both sides, symmetrical (see table)

▼ **Throttle pin overview**

Size	55	80	107	140	160	200
Groove size [mm]	0.30	0.30	0.30	0.55	0.55	0.65

Sizes 140 to 200

Technical data, solenoid with ø37	EZ5	EZ6
Voltage	12 V (±20%)	24 V (±20%)
Position $V_{g\,max}$	de-energized	de-energized
Position $V_{g\,min}$	energized	energized
Nominal resistance (at 20 °C)	5.5 Ω	21.7 Ω
Nominal power	26.2 W	26.5 W
Minimum required active current	1.32 A	0.67 A
Duty cycle	100%	100%
Type of protection: see connector version on page 62		

▼ **Circuit diagram EZ5, EZ6 (negative control)**

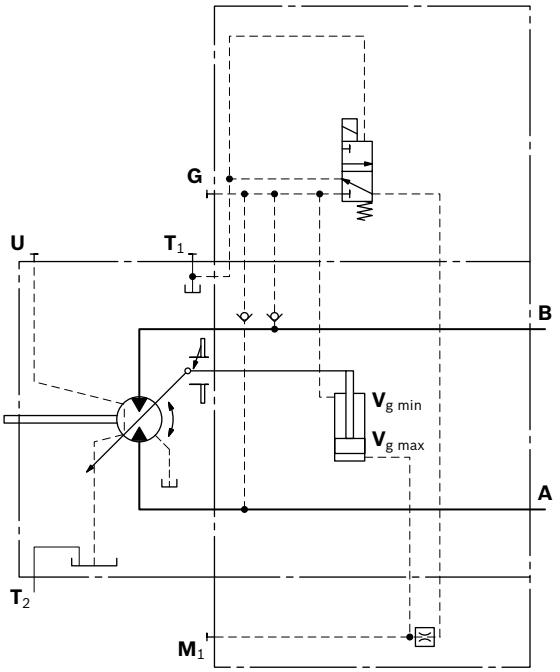

Sizes 55 to 107

Technical data, solenoid with ø45	EZ7	EZ8
Voltage	12 V (±20%)	24 V (±20%)
Position $V_{g\,max}$	de-energized	de-energized
Position $V_{g\,min}$	energized	energized
Nominal resistance (at 20 °C)	4.8 Ω	19.2 Ω
Nominal power	30 W	30 W
Minimum required active current	1.5 A	0.75 A
Duty cycle	100%	100%
Type of protection: see connector version on page 62		

▼ **Circuit diagram EZ7, EZ8 (negative control)**

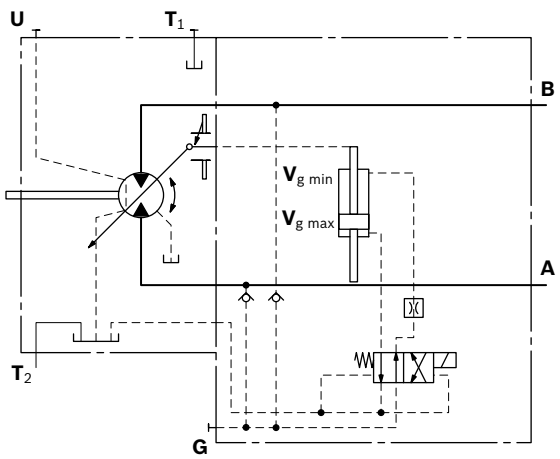

HA – Automatic high-pressure related control

The automatic high-pressure related control adjusts the displacement automatically depending on the operating pressure.
The displacement of the A6VM motor with HA control is $V_{g\,min}$ (maximum speed and minimum torque). The control device measures internally the operating pressure at **A** or **B** (no control line required) and upon reaching the set beginning of control, the controller swivels the motor from $V_{g\,min}$ to $V_{g\,max}$ with increase of operating pressure. The displacement is modulated between $V_{g\,min}$ and $V_{g\,max}$, thereby depending on load conditions.

HA1, HA2 positive control

- Beginning of control at $V_{g\,min}$ (minimum torque, maximum speed)
- End of control at $V_{g\,max}$ (maximum torque, minimum speed)

Notice

- For safety reasons, winch drives are not permissible with beginning of control at $V_{g\,min}$ (standard for HA).
- The control oil is internally taken from the high pressure side of the motor (**A** or **B**). For reliable control, an operating pressure of at least 30 bar is required in **A** (**B**). If a control operation is performed at an operating pressure < 30 bar, an auxiliary pressure of at least 30 bar must be applied at port **G** via an external check valve. For lower pressures, please contact us.
  Please note that pressures up to 450 bar can occur at port **G**.
- The beginning of control and the HA.T3 charakteristic curve are influenced by case pressure. An increase in case pressure causes an increase in the beginning of control (see page 7) and thus a parallel shift of the characteristic.
- At port **X** a leakage flow of maximum 0.3 l/min occurs (working pressure > pilot pressure). To avoid a build-up of pilot pressure, pressure is to be relieved from port **X** to the reservoir. **Only with HA.T control**

Response time damping

The response time damping impacts the swivel behavior of the motor and consequently the machine response speed.

Standard for sizes 55 to 200

HA1,2 with one-sided throttle pin, throttling occurs from $V_{g\,min}$ to $V_{g\,max}$. (see table)
HA3 and HA3T3 with BVI and throttle pin on both sides, 0.30, symmetrical

▼ **Throttle pin overview**

Size	55	80	107	140	160	200
Groove size [mm]	0.45	0.45	0.55	0.55	0.55	0.65

Standard for sizes 55 to 200

HA with BVD or BVE counterbalance valve, with throttle screw (see table)

▼ **Throttle screw**

Size	55	80	107	140	160	200
Diameter [mm]	0.80	0.80	0.80	0.80	0.80	0.80

HA1 with minimum pressure increase, positive control

An operating pressure increase of $\Delta p \leq$ approx. 10 bar results in an increase in displacement from $V_{g\,min}$ towards $V_{g\,max}$.

Beginning of control, setting range 80 to 350 bar

Please state the desired beginning of control in plain text when ordering, e.g.: beginning of control at 300 bar.

▼ **Characteristic curve HA1**

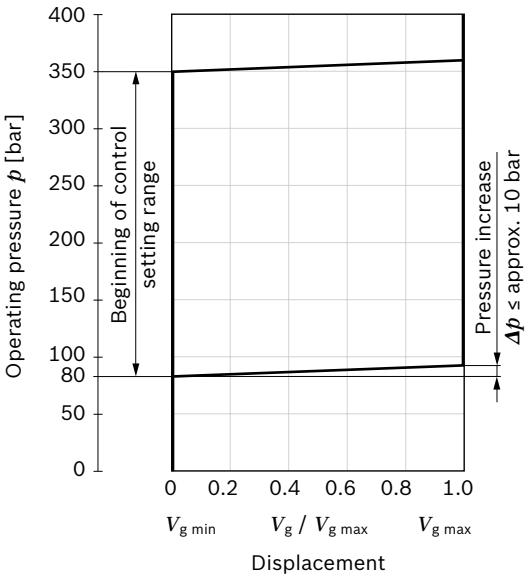

▼ **Circuit diagram HA1**

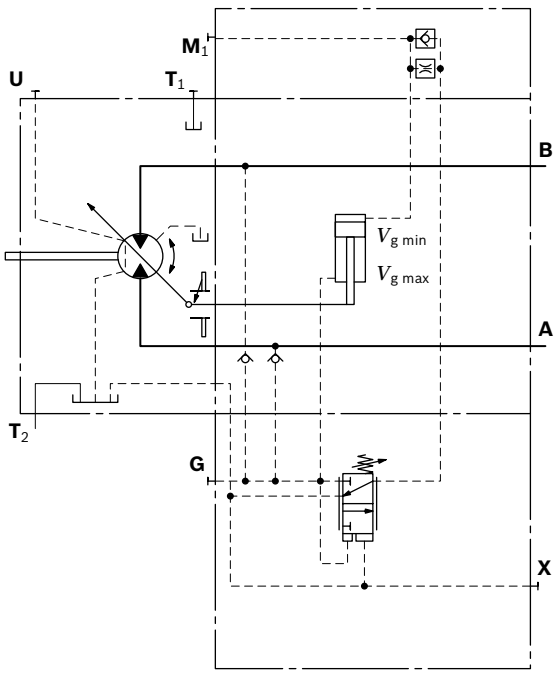

HA2 with pressure increase, positive control

An operating pressure increase of Δp approx. 100 bar results in an increase in displacement from $V_{g\,min}$ to $V_{g\,max}$.

Beginning of control, setting range 80 to 350 bar

Please state the desired beginning of control in plain text when ordering, e.g.: beginning of control at 200 bar.

▼ **Characteristic curve HA2**

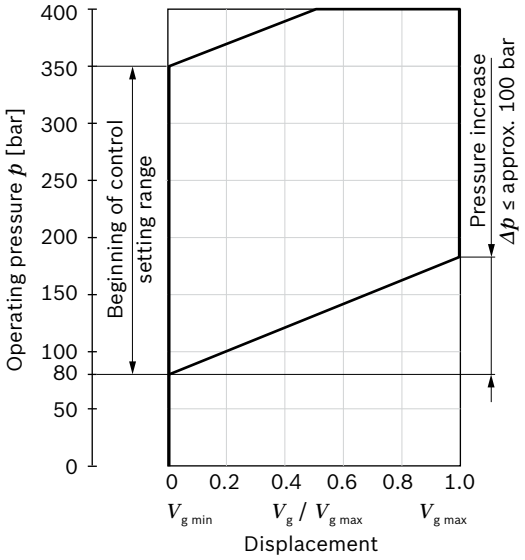

▼ **Circuit diagram HA2**

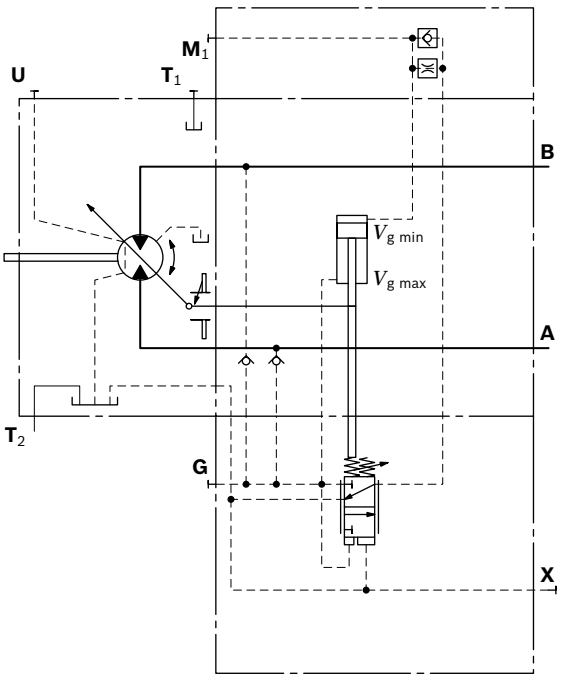

HA.T3 override, hydraulic, remote controlled, proportional

With the HA.T3 control, the beginning of control can be influenced by applying a pilot pressure to port **X**.
For every 1 bar of pilot pressure increase, the beginning of control is reduced by 17 bar.

Beginning of control setting	300 bar	300 bar
Pilot pressure at port **X**	0 bar	10 bar
Beginning of control at	300 bar	130 bar

Notice

Maximum permissible pilot pressure 100 bar.

▼ **Circuit diagram HA1T3**

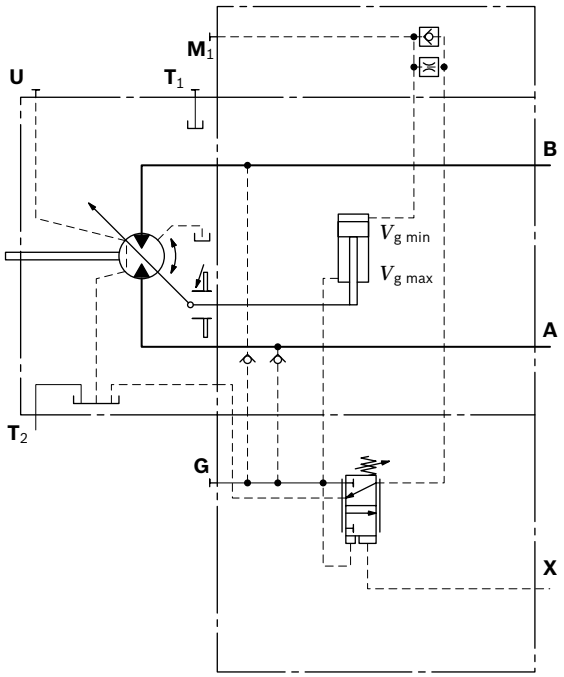

▼ **Circuit diagram HA2T3**

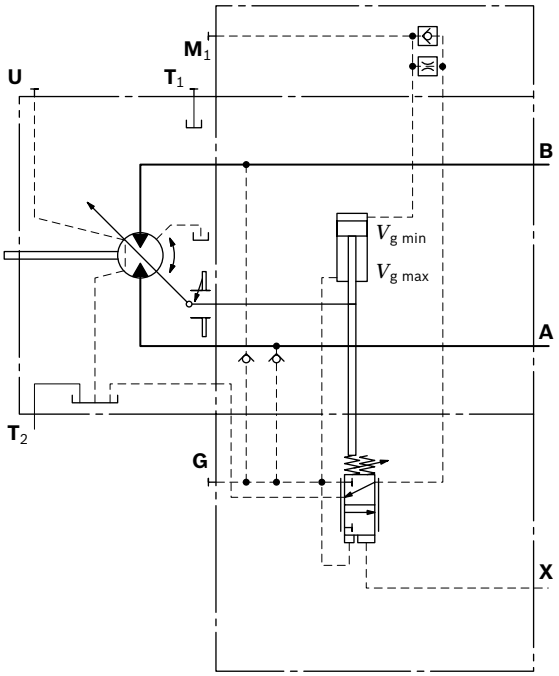

HA.U1, HA.U2 electric override, two-point

With the HA.U1 or HA.U2 control, the beginning of control can be overridden by an electric signal to a switching solenoid. When the override solenoid is energized, the variable motor swivels to maximum swivel angle, without intermediate position.

The beginning of control can be set between 80 and 300 bar (specify required setting in plain text when ordering).

Technical data, solenoid with ø45	U1	U2
Voltage	12 V (±20%)	24 V (±20%)
No override	de-energized	de-energized
Position $V_{g\,max}$	energized	energized
Nominal resistance (at 20 °C)	4.8 Ω	19.2 Ω
Nominal power	30 W	30 W
Minimum required active current	1.5 A	0.75 A
Duty cycle	100%	100%
Type of protection: see connector version on page 62		

▼ **Circuit diagram HA1U1, HA1U2**

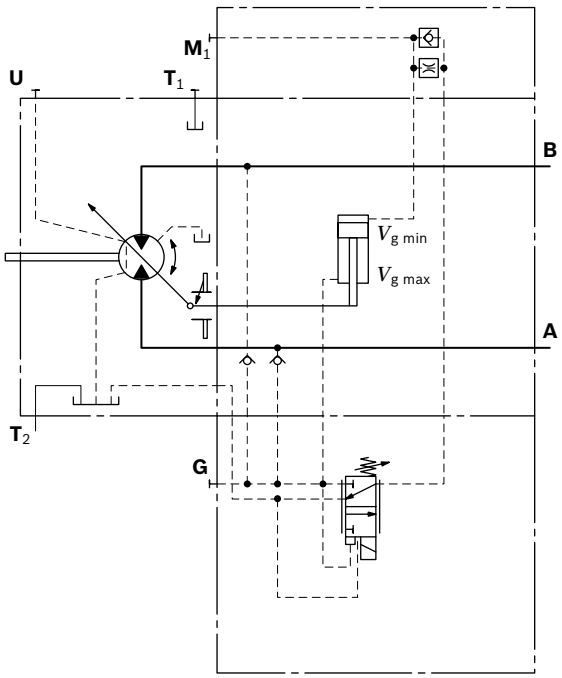

▼ **Circuit diagram HA2U1, HA2U2**

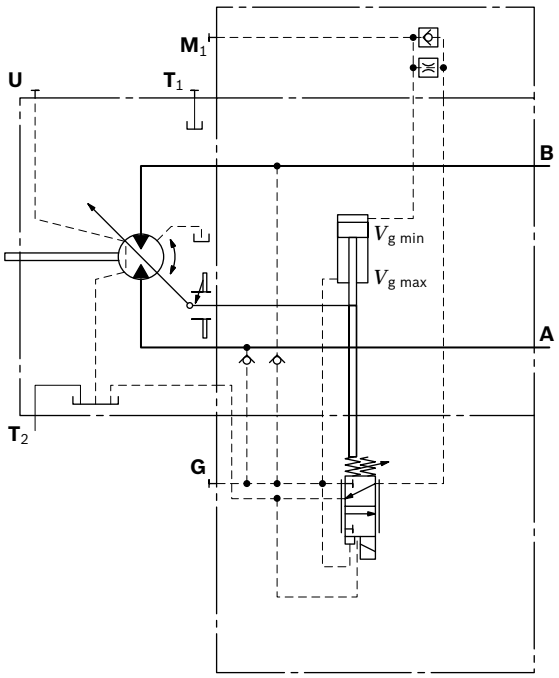

RE 91607/06.2010, Bosch Rexroth AG

309

HA.R1, HA.R2 electric override, electric travel direction valve

With the HA.R1 or HA.R2 control, the beginning of control can be overridden by an electric signal to switching solenoid **b**. When the override solenoid is energized, the variable motor swivels to maximum swivel angle, without intermediate position.

The travel direction valve ensures that the preselected pressure side of the hydraulic motor (**A** or **B**) is always connected to the HA control, and thus determines the swivel angle, even if the high-pressure side changes (e.g. -travel drive during a downhill operation). This thereby prevents undesired jerky deceleration and/or braking characteristics.

The travel direction valve (see page 25) is either pressure spring or switched by energizing switching solenoid **a**, depending on the direction of rotation (travel direction).

Electric override

Technical data, solenoid b with ø45	R1	R2
Voltage	12 V (±20%)	24 V (±20%)
No override	de-energized	de-energized
Position $V_{g\,max}$	energized	energized
Nominal resistance (at 20 °C)	4.8 Ω	19.2 Ω
Nominal power	30 W	30 W
Minimum required active current	1.5 A	0.75 A
Duty cycle	100%	100%
Type of protection: see connector version on page 62		

Travel direction valve, electric

Technical data, solenoid a with ø37		R1	R2
Voltage		12 V (±20%)	24 V (±20%)
Direction of rotation	Operating pressure in		
ccw	**B**	energized	energized
cw	**A**	de-energized	de-energized
Nominal resistance (at 20 °C)		5.5 Ω	21.7 Ω
Nominal power		26.2 W	26.5 W
Minimum required active current		1.32 A	0.67 A
Duty cycle		100%	100%
Type of protection: see connector version on page 62			

▼ **Circuit diagram HA1R1, HA1R2**

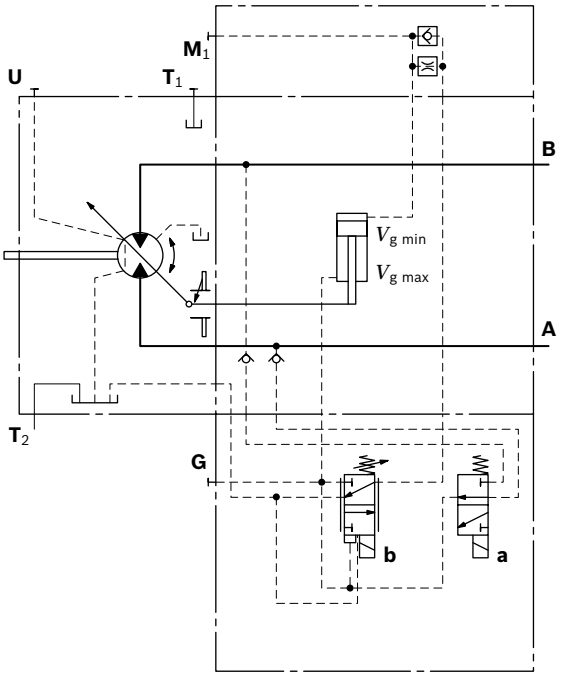

▼ **Circuit diagram HA2R1, HA2R2**

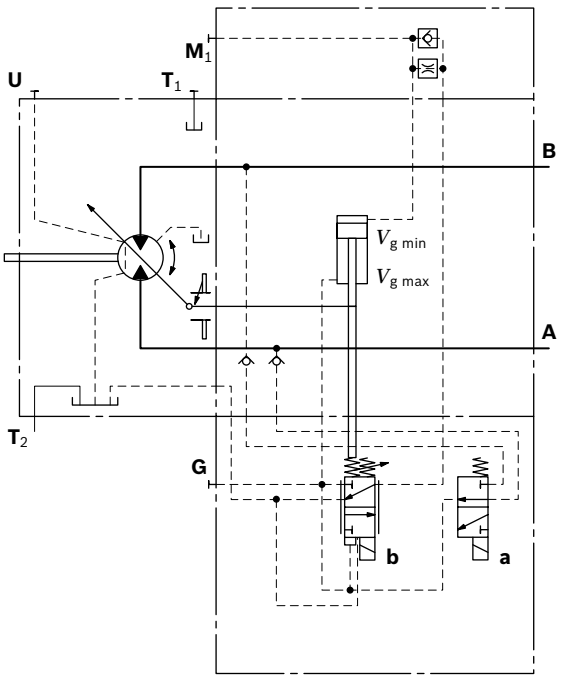

DA – Automatic speed-related control

The variable motor A6VM with automatic speed-related control, type DA, is intended for use in hydrostatic travel drives in combination with the variable pump A4VG with DA control.
A drive-speed-related pilot pressure signal is generated by the A4VG variable pump, and that signal, together with the operating pressure, regulates the swivel angle of the hydraulic motor.
Increasing pump speed, i.e. increasing pilot pressure, causes the motor to swivel to a smaller displacement (lower torque, higher speed), depending on the operating pressure.
If the operating pressure exceeds the pressure setpoint set on the controller, the variable motor swivels to a larger displacement (higher torque, lower speed).

- Pressure ratio p_{St}/p_{HD} = 5/100

DA closed loop control is only suitable for certain types of drive systems and requires review of the engine and vehicle parameters to ensure that the motor is used correctly and that machine operation is safe and efficient. We recommend that all DA applications be reviewed by a Bosch Rexroth application engineer.
Detailed information is available from our sales organization.

Notice
The beginning of control and the DA charakteristic curve are influenced by case pressure. An increase in case pressure causes a decrease in the beginning of control (see page 7) and thus a parallel shift of the characteristic.

Response time damping
The response time damping impacts the swivel behavior of the motor and consequently the machine response speed.
Standard for sizes 55 to 200
DA with throttle pin on one side, throttling occurs from $V_{g\,min}$ to $V_{g\,max}$ (see table).

▼ **Throttle pin overview**

Size	55	80	107	140	160	200
Groove size [mm]	0.45	0.45	0.55	0.55	0.55	0.65

DA0 hydraulic travel direction valve, negative control
Depending on the direction of rotation (travel direction), the travel direction valve is switched by using pilot pressures connections **X**$_1$ or **X**$_2$.

Direction of rotation	Operating pressure in	Pilot pressure in
cw	**A**	**X**$_1$
ccw	**B**	**X**$_2$

▼ **Circuit diagram DA0**

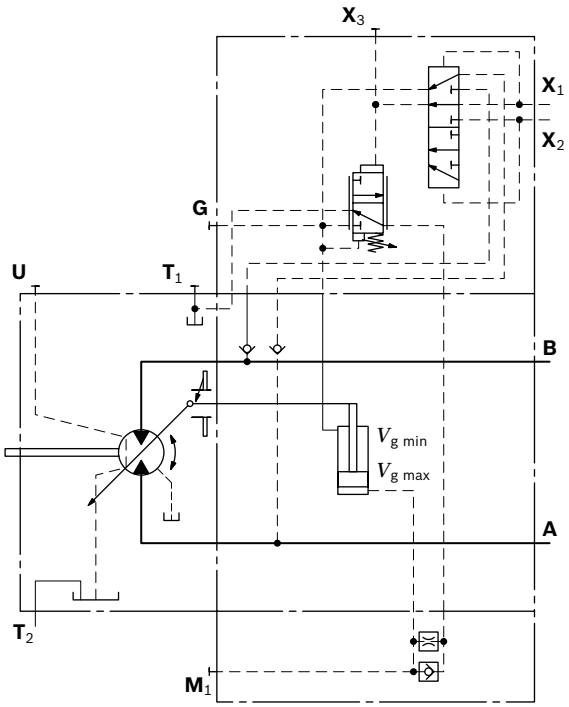

DA1, DA2 electric travel direction valve + electric $V_{g\,max}$ circuit, negative control

Depending on the direction of rotation (direction of travel), the travel direction valve is actuated through the compression spring or the switching solenoid **a**.

When switching solenoid **b** is energized, the control can be overridden and the motor can be swiveled to maximum displacement (high torque, lower rotational speed) (electric $V_{g\,max}$-circuit).

Travel direction valve, electric

Technical data, solenoid a with ø37		DA1	DA2
Voltage		12 V (±20%)	24 V (±20%)
Direction of rotation	Operating pressure in		
ccw	**B**	de-energized	de-energized
cw	**A**	energized	energized
Nominal resistance (at 20 °C)		5.5 Ω	21.7 Ω
Nominal power		26.2 W	26.5 W
Minimum required active current		1.32 A	0.67 A
Duty cycle		100%	100%
Type of protection: see connector version on page 62			

Electric override

Technical data, solenoid b with ø37	DA1	DA2
Voltage	12 V (±20%)	24 V (±20%)
No override	de-energized	de-energized
Position $V_{g\,max}$	energized	energized
Nominal resistance (at 20 °C)	5.5 Ω	21.7 Ω
Nominal power	26.2 W	26.5 W
Minimum required active current	1.32 A	0.67 A
Duty cycle	100%	100%
Type of protection: see connector version on page 62		

▼ **Circuit diagram DA1, DA2**

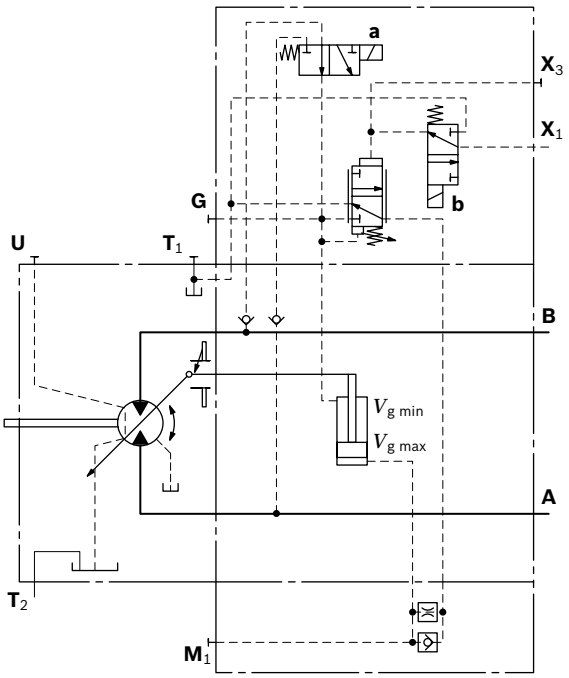

Electric travel direction valve (for DA, HA.R)

Application in travel drives in closed circuits. The travel direction valve of the motor is actuated by an electric signal that also switches the swivel direction of the travel drive pump (e.g. A4VG with DA control valve).
If the pump in the closed circuit is switched to the neutral position or into reverse, the vehicle may experience jerky deceleration or braking, depending on the vehicle weight and current travel speed.
When the travel direction valve, which must be logically coordinated with the pump control, of the pump (e.g. 4/3-way directional valve of the DA-control) is switched toneutral position,

- the neutral position,
  the electrical circuitry causes the previous signal on the travel direction valve on the motor to be retained.
- Reversing,
  the electrical circuitry causes the travel direction valve of the motor to switch to the other travel direction following a time delay (approx. 0.8 s) with respect to the pump.

As a result, jerky deceleration or braking is prevented in both cases.Circuit diagram, electric travel direction valve

▼ **Circuit diagram, electric travel direction valve**

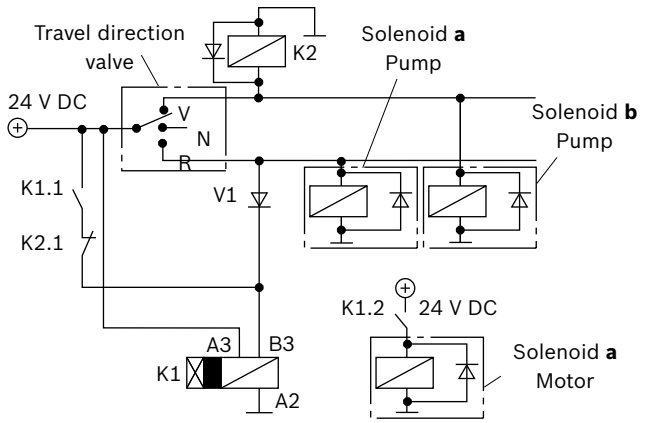

Notice
The shown diodes and relays are not included in the scope of delivery of the motor.

▼ **Control DA1, DA**

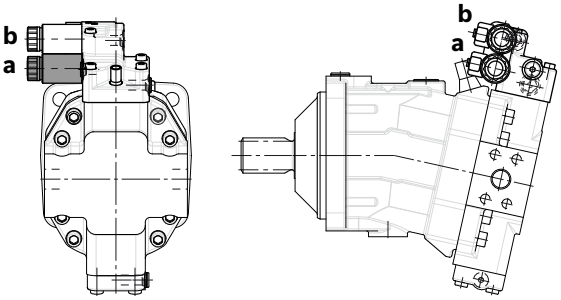

▼ **Control HA1R., HA2R.**

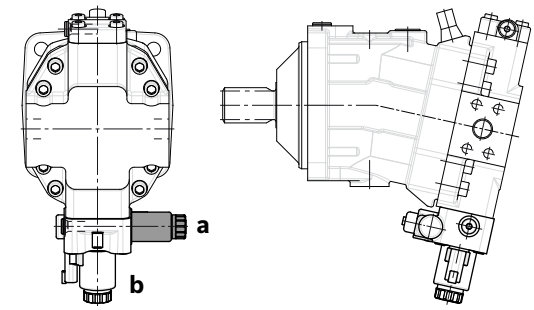

Switching solenoid **a** on the travel direction valve

Dimensions size 55

EP5, EP6 – Proportional electric control, negative control

Port plate 2 — SAE working ports **A** and **B** at side, opposite

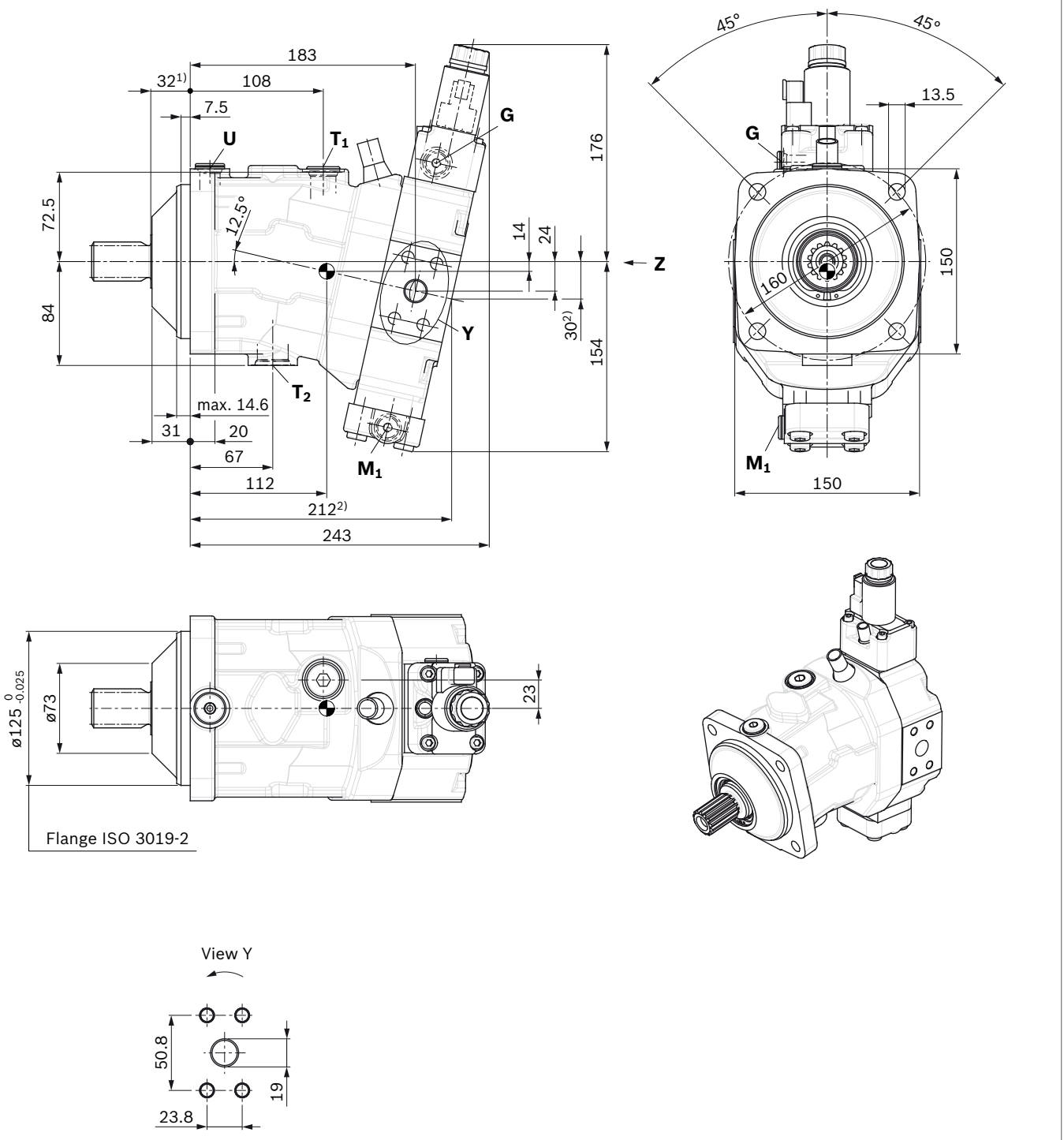

Center of gravity

1) To shaft collar

2) Port plate 1 — SAE working ports **A** and **B** at rear

▼ **Location of the service line ports on the port plates** (view **Z**)

2 SAE working port **A** and **B** at side, opposite

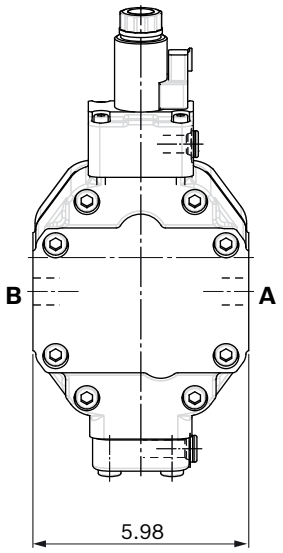

1 SAE working port **A** and **B** at rear

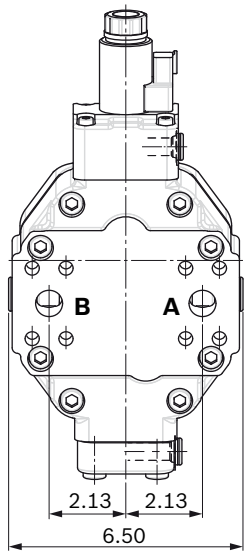

2 SAE working port **A** and **B** at side, opposite only HZ7, EZ7/8

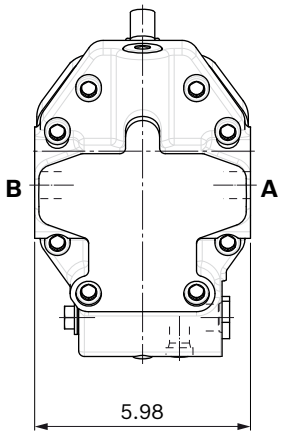

1 SAE working port **A** and **B** at rear only HZ7, EZ7/8

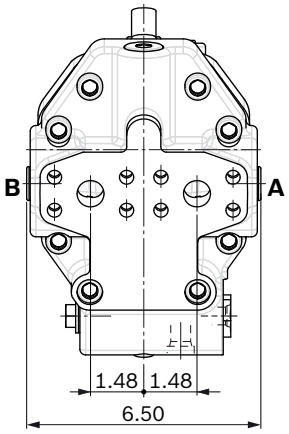

▼ **Splined shaft SAE J744**

S7 – 1 1/4 in 14T 12/24DP[1)]

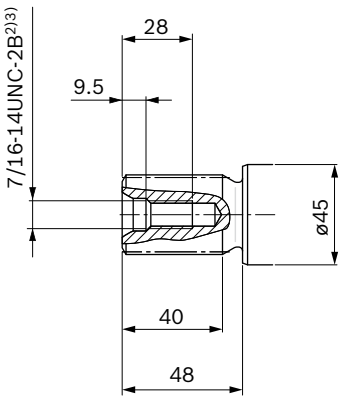

▼ **Splined shaft DIN 5480**

Z6 – W30×2×14×9g

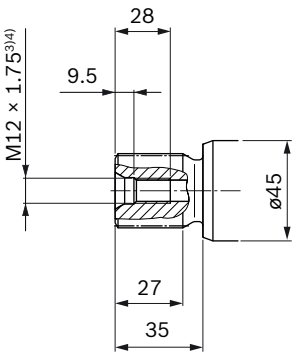

▼ **Splined shaft DIN 5480**

Z8 – W35×2×16×9g

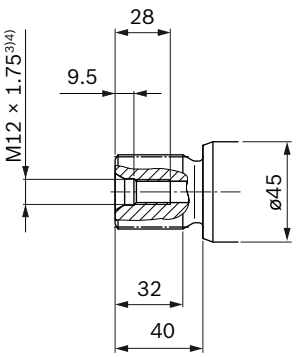

1) Involute spline acc. to ANSI B92.1a, 30° pressure angle, flat root, side fit, tolerance class 5
2) Thread according to ASME B1.1
3) For notes on tightening torques, see instruction manual
4) Center bore according to DIN 332 (thread according to DIN 13)

RE 91607/06.2012, Bosch Rexroth AG

Ports		Standard	Size[1]	p_{max} [bar][2]	Status[6]
A, B	Working port Fastening thread A/B	SAE J518[3] DIN 13	3/4 in M10 × 1.5; 17 deep	450	O
T_1	Drain port	ISO 6149[5]	M22 × 1.5; 15.5 deep	3	X[4]
T_2	Drain port	ISO 6149[5]	M27 × 2; 19 deep	3	O[4]
G	Synchronous control	ISO 6149[5]	M14 × 1.5; 11.5 deep	450	X
U	Bearing flushing	ISO 6149[5]	M18 × 1.5; 14.5 deep	3	X
X	Pilot signal (HP, HZ, HA1T/HA2T)	ISO 6149[5]	M14 × 1.5; 11.5 deep	100	O
X	Pilot signal (HA1, HA2)	ISO 6149[5]	M14 × 1.5; 11.5 deep	3	X
X_1, X_2	Pilot signal (DA0)	ISO 8434-1	SDSC-L8×M12-F	40	O
X_1	Pilot signal (DA1, DA2)	ISO 6149[5]	M14 × 1.5; 11.5 deep	40	O
X_3	Pilot signal (DA1, DA2)	ISO 6149[5]	M14 × 1.5; 11.5 deep	40	X
M_1	Stroking chamber measurement	ISO 6149[5]	M14 × 1.5; 11.5 deep	450	X

1) For notes on tightening torques, see instruction manual
2) Depending on the application, momentary pressure peaks can occur. Keep this in mind when selecting measuring devices and fittings.
3) Only dimensions according to SAE J518, metric fastening thread is a deviation from standard.
4) Depending on installation position, **T_1** or **T_2** must be connected (see also installation instructions on page 72).
5) The countersink can be deeper than as specified in the standard.
6) O = Must be connected (plugged on delivery)
X = Plugged (in normal operation)

▼ **EP1, EP2** – Electric proportional control, positive control

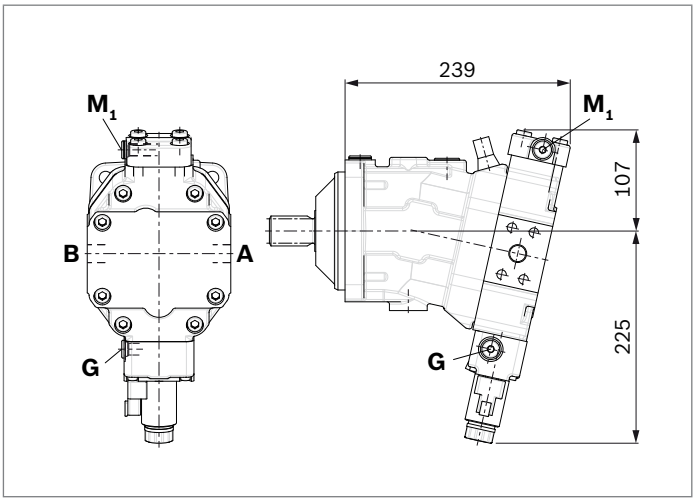

▼ **EP5D1, EP6D1** – Electric proportional control, negative control, with pressure control, fixed

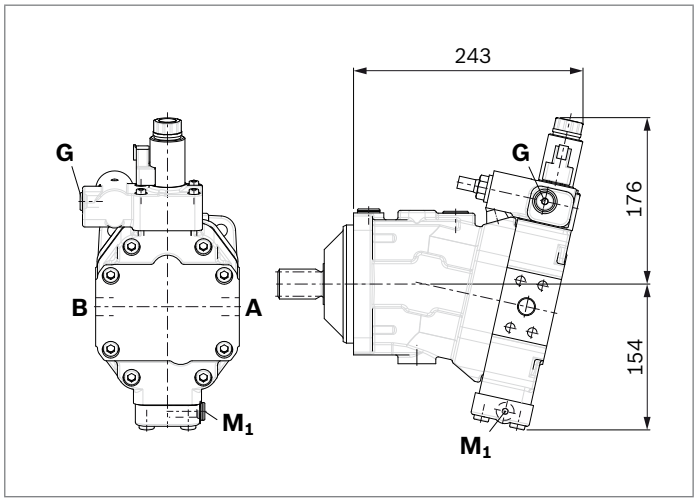

▼ **HP1, HP2** – Hydraulic proportional control, positive control

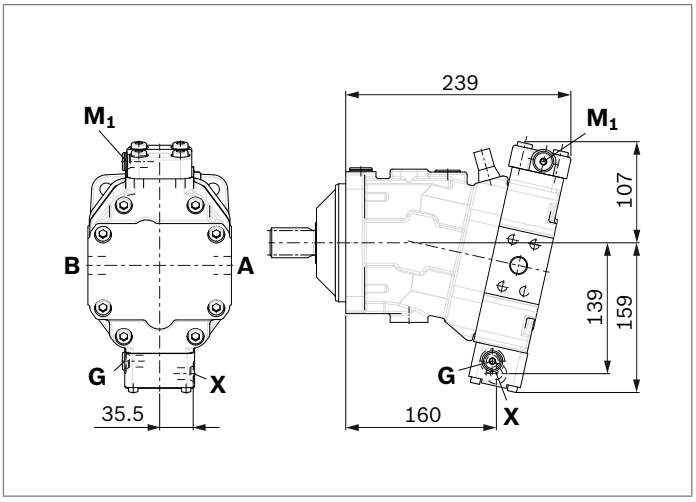

▼ **HP5, HP6** – Hydraulic proportional control, negative control

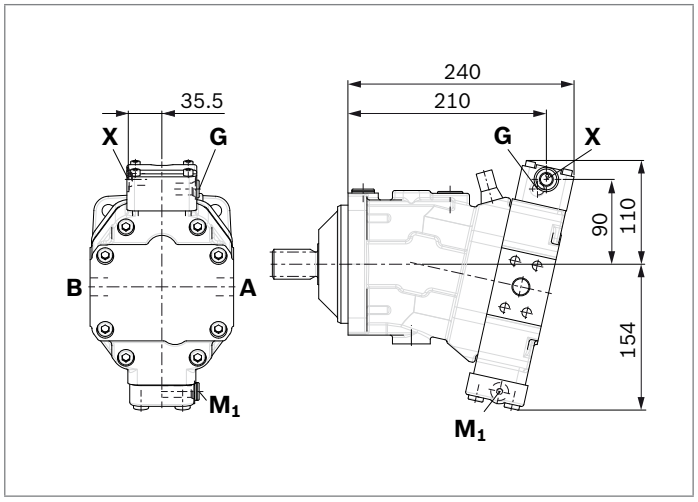

▼ **HP5D1, HP6D1** – Hydraulic proportional control, negative control, with pressure control, fixed

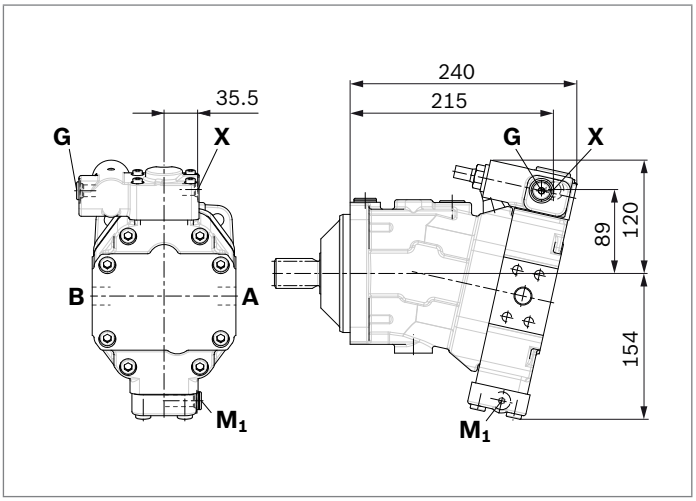

▼ **HZ7** – Hydraulic two-point control, negative control

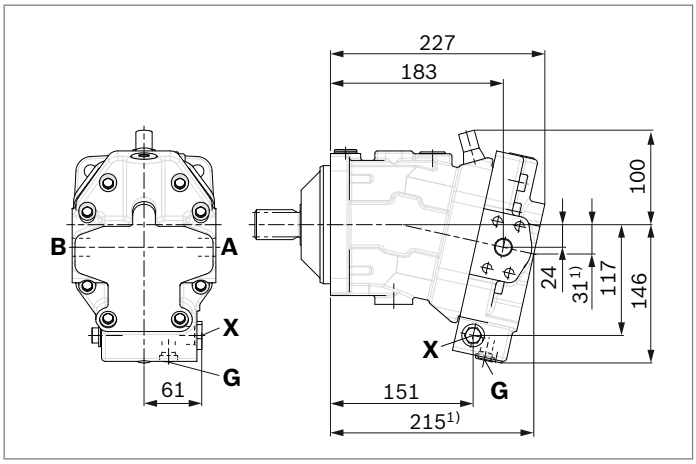

▼ **EZ7, EZ8** – Electric two-point control, negative control

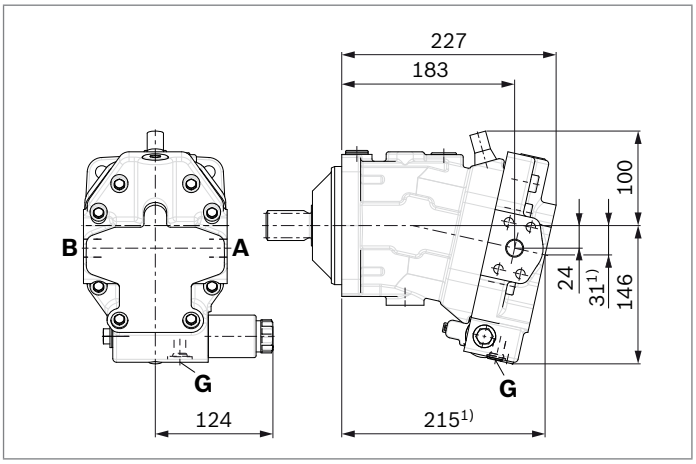

▼ **HA1, HA2 / HA1T3, HA2T3** – Automatic high-pressure-related control, positive control, with override hydraulic remote controlled, proportional

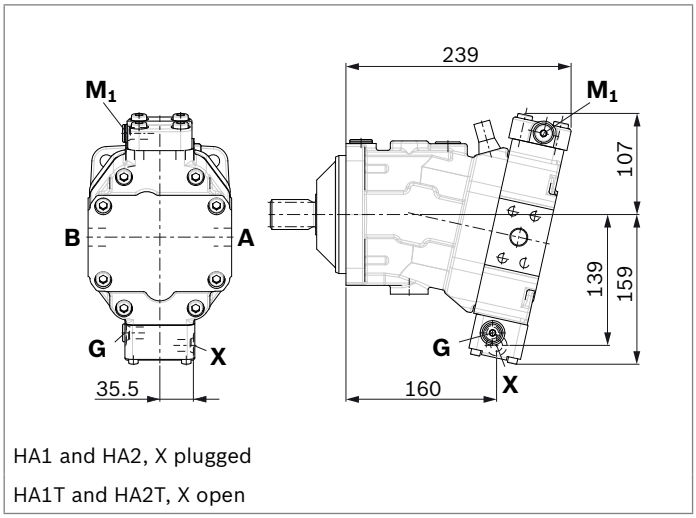

HA1 and HA2, X plugged

HA1T and HA2T, X open

▼ **HA1U1, HA2U2** – Automatic high-pressure-related control, positive control, with override, electric, two-point

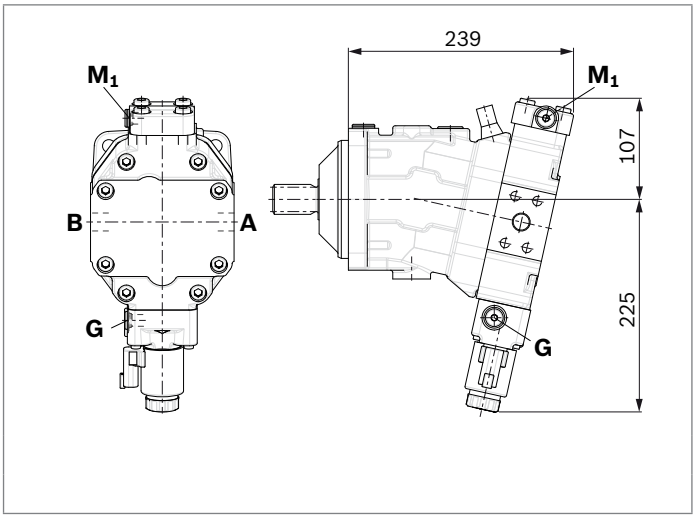

▼ **HA1R1, HA2R2** – Automatic high-pressure-related control, positive control, with override, electric and travel direction valve, electric

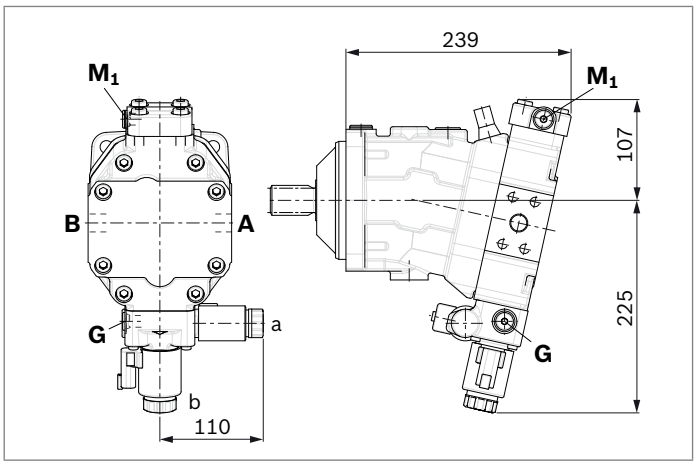

1) Port plate 1 – SAE working ports **A** and **B** at rear

▼ **DA0** – Automatic speed-related control, negative control, with hydraulic travel direction valve

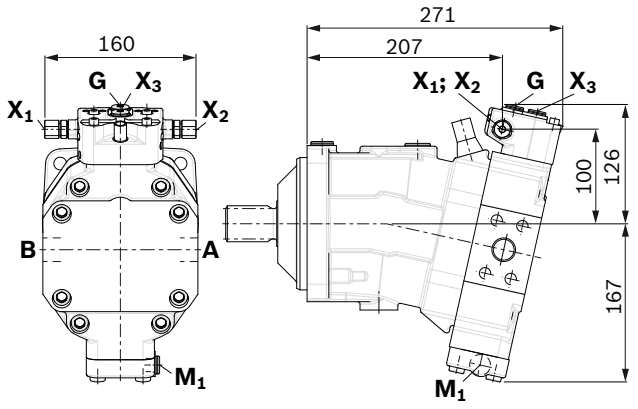

X$_1$, **X**$_2$ pipe fitting SDSC – L8×M12 – F according to ISO 8434-1

Use assembled fitting!

▼ **DA1, DA2** – Automatic speed-related control, negative control, with electric travel direction valve and electric $V_{g\,max}$ circuit

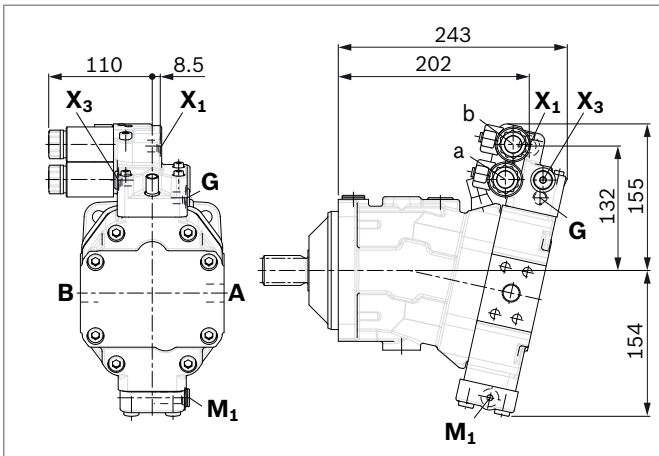

Dimensions size 80

EP5, EP6 – Proportional electric control, negative control

Port plate 2 — SAE working ports **A** and **B** at side, opposite

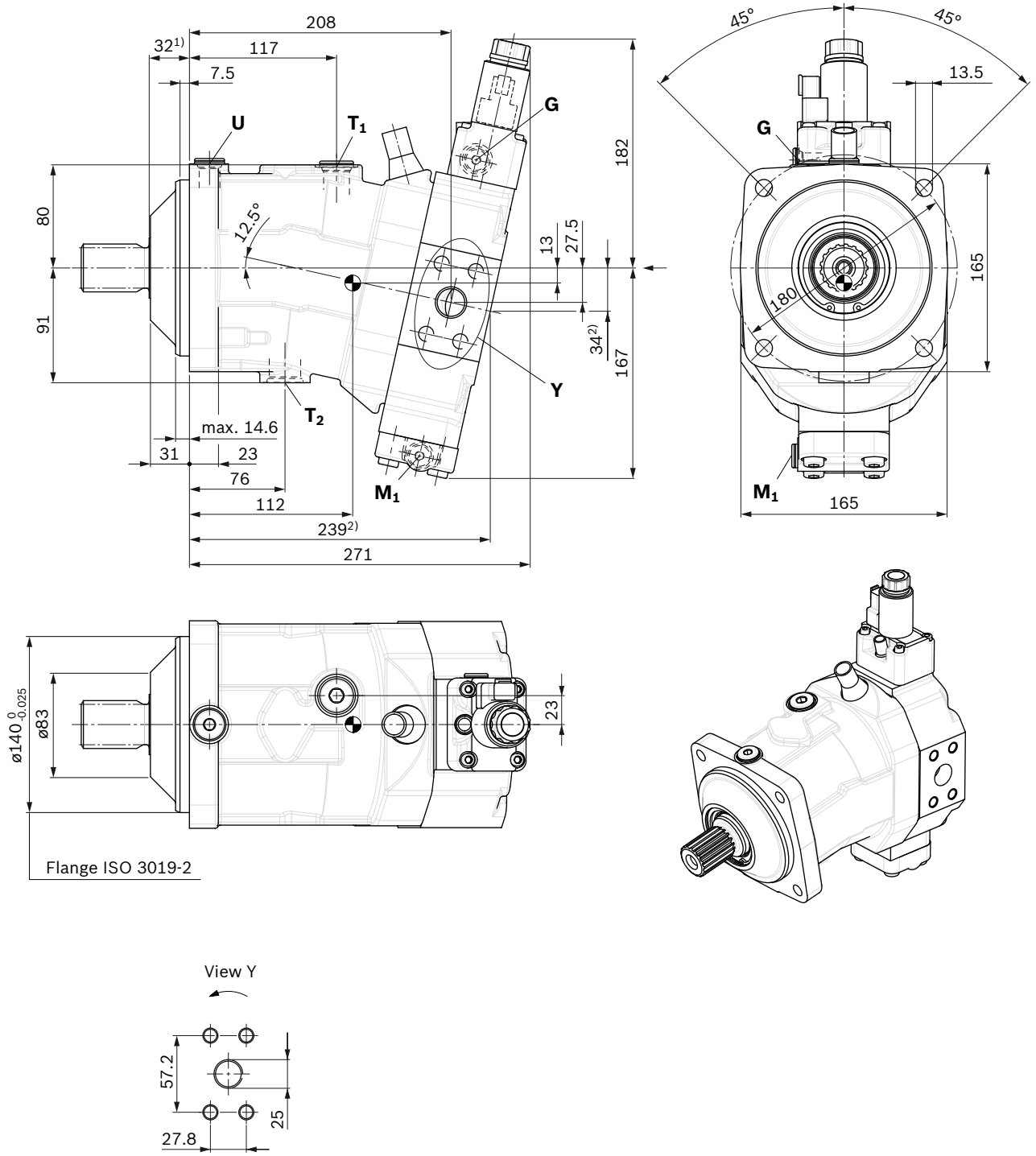

Center of gravity

1) To shaft collar

2) Port plate 1 — SAE working ports **A** and **B** at rear

▼ **Location of the service line ports on the port plates** (view **Z**)

2 SAE working port **A** and **B** at side, opposite

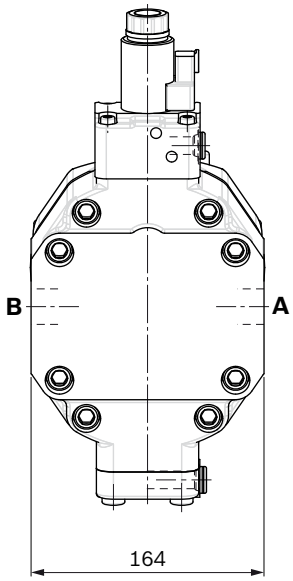

1 SAE working port **A** and **B** at rear

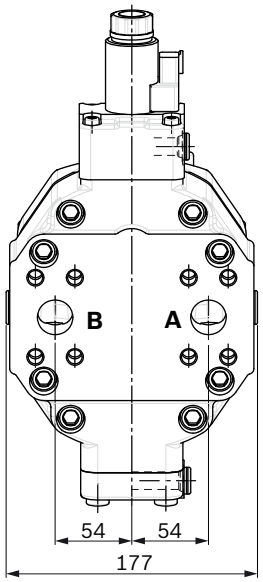

2 SAE working port **A** and **B** at side, opposite only HZ7, EZ7/8

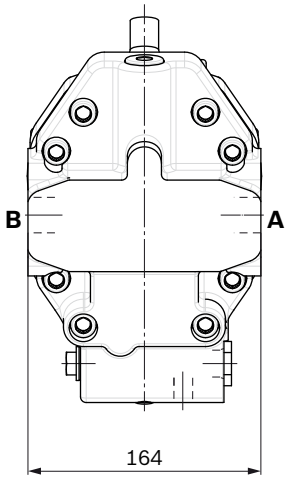

1 SAE working port **A** and **B** at rear only HZ7, EZ7/8

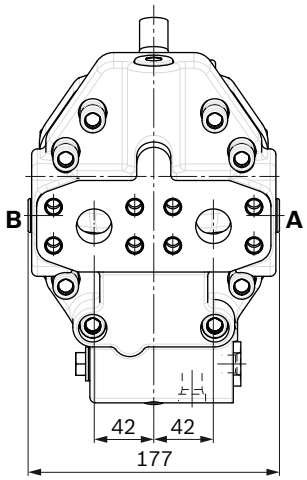

▼ **Splined shaft SAE J744**

S7 – 1 1/4 in 14T 12/24DP[1)]

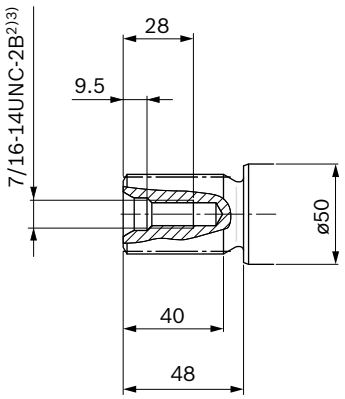

▼ **Splined shaft DIN 5480**

Z8 – W35×2×16×9g

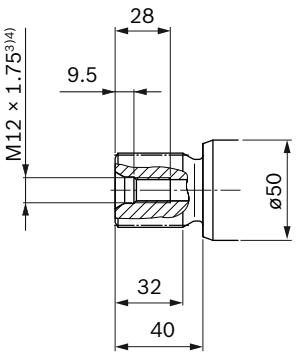

▼ **Splined shaft DIN 5480**

Z9 – W40×2×18×9g

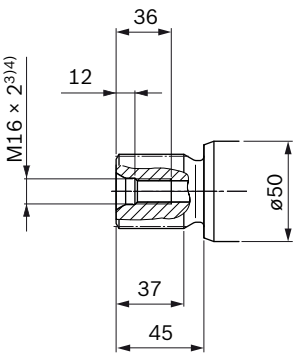

1) Involute spline acc. to ANSI B92.1a, 30° pressure angle, flat root, side fit, tolerance class 5
2) Thread according to ASME B1.1
3) For notes on tightening torques, see instruction manual
4) Center bore according to DIN 332 (thread according to DIN 13)

RE 91607/06.2012, Bosch Rexroth AG

Ports		Standard	Size[1]	p_{max} [bar][2]	Status[6]
A, B	Working port Fastening thread A/B	SAE J518[3] DIN 13	1 in M12 × 1.75; 17 deep	450	O
T_1	Drain port	ISO 6149[5]	M22 × 1.5; 15.5 deep	3	X[4]
T_2	Drain port	ISO 6149[5]	M27 × 2; 19 deep	3	O[4]
G	Synchronous control	ISO 6149[5]	M14 × 1.5; 11.5 deep	450	X
U	Bearing flushing	ISO 6149[5]	M18 × 1.5; 14.5 deep	3	X
X	Pilot signal (HP, HZ, HA1T/HA2T)	ISO 6149[5]	M14 × 1.5; 11.5 deep	100	O
X	Pilot signal (HA1, HA2)	ISO 6149[5]	M14 × 1.5; 11.5 deep	3	X
X_1, X_2	Pilot signal (DA0)	ISO 8434-1	SDSC-L8×M12-F	40	O
X_1	Pilot signal (DA1, DA2)	ISO 6149[5]	M14 × 1.5; 11.5 deep	40	O
X_3	Pilot signal (DA1, DA2)	ISO 6149[5]	M14 × 1.5; 11.5 deep	40	X
M_1	Stroking chamber measurement	ISO 6149[5]	M14 × 1.5; 11.5 deep	450	X

1) For notes on tightening torques, see instruction manual
2) Depending on the application, momentary pressure peaks can occur. Keep this in mind when selecting measuring devices and fittings.
3) Only dimensions according to SAE J518, metric fastening thread is a deviation from standard.
4) Depending on installation position, **T_1** or **T_2** must be connected (see also installation instructions on page 72).
5) The countersink can be deeper than as specified in the standard.
6) O = Must be connected (plugged on delivery)
X = Plugged (in normal operation)

▼ **EP1, EP2** – Electric proportional control, positive control

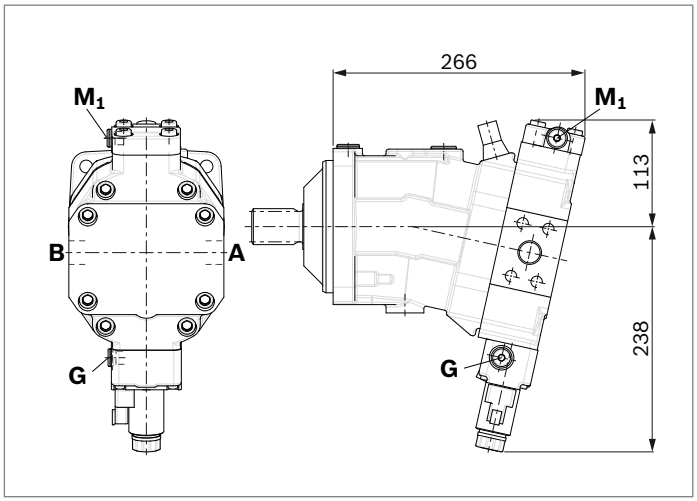

▼ **EP5D1, EP6D1** – Electric proportional control, negative control, with pressure control, fixed

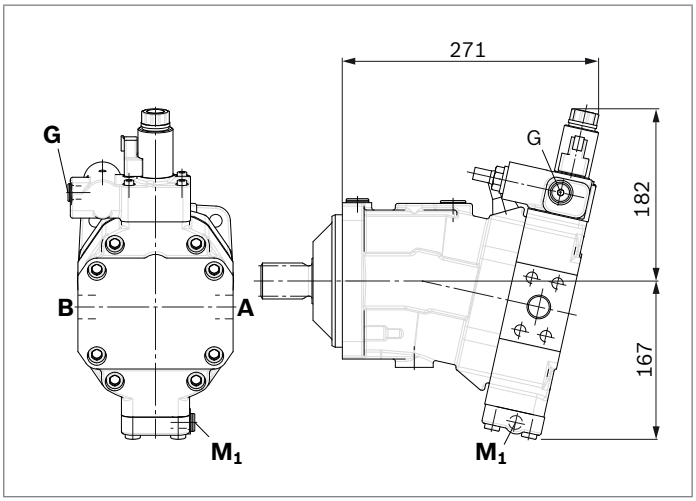

▼ **HP1, HP2** – Hydraulic proportional control, positive control

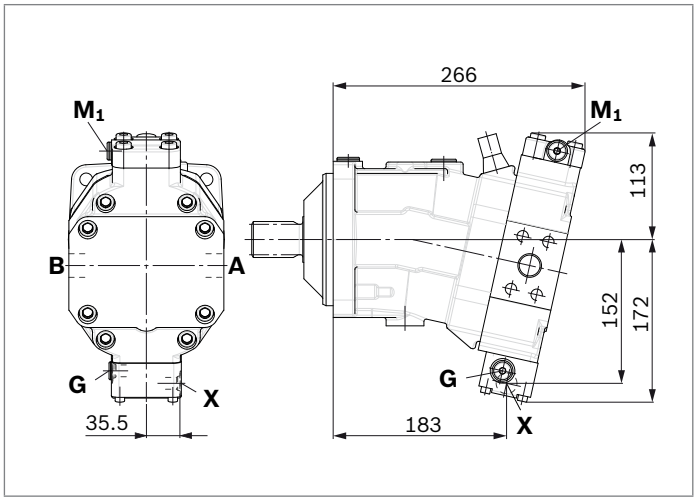

▼ **HP5, HP6** – Hydraulic proportional control, negative control

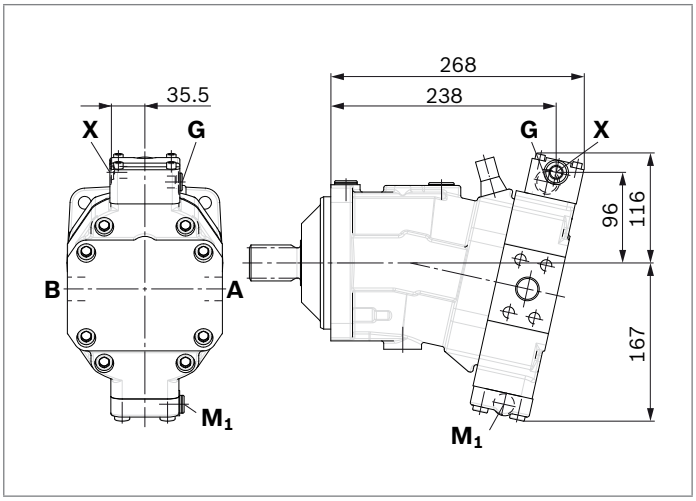

▼ **HP5D1, HP6D1** – Hydraulic proportional control, negative control, with pressure control, fixed

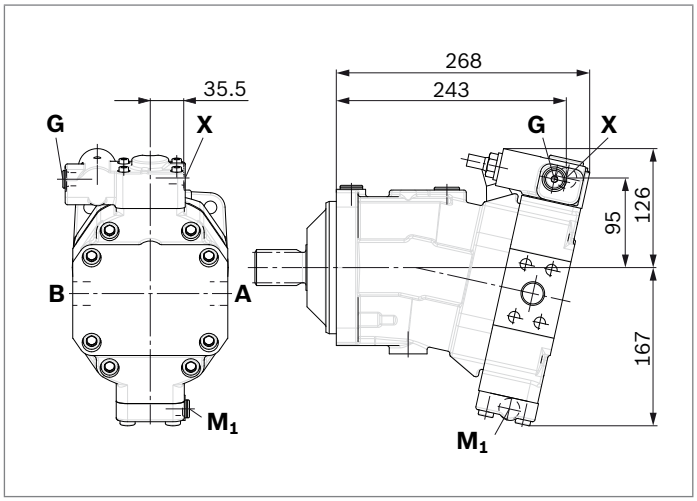

▼ **HZ7** – Hydraulic two-point control, negative control

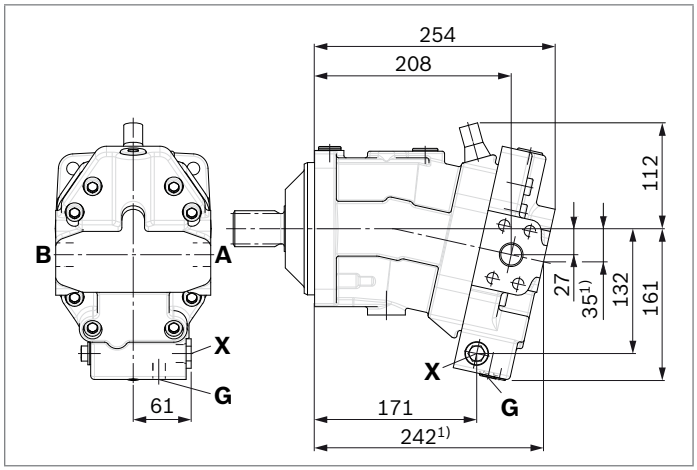

▼ **EZ7, EZ8** – Electric two-point control, negative control

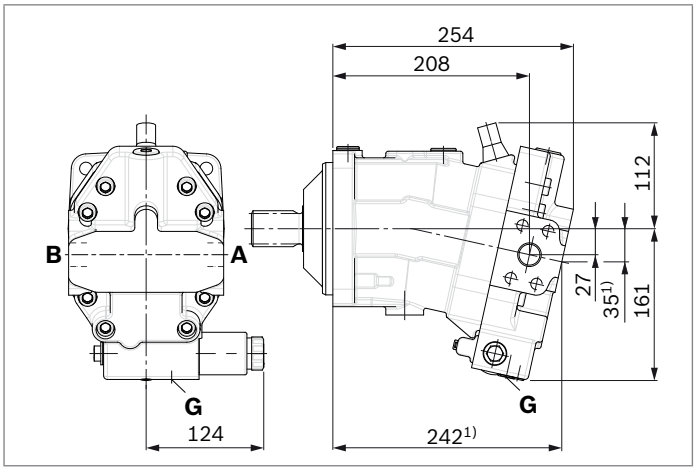

▼ **HA1, HA2 / HA1T3, HA2T3** – Automatic high-pressure-related control, positive control, with override hydraulic remote controlled, proportional

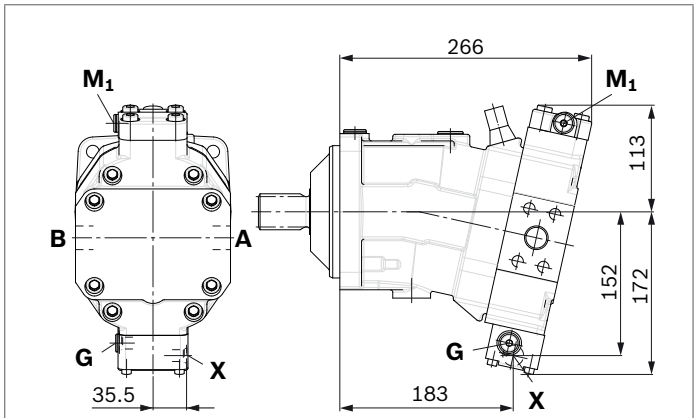

HA1 and HA2, **X** plugged

HA1T and HA2T, **X** open

▼ **HA1U1, HA2U2** – Automatic high-pressure-related control, positive control, with override, electric, two-point

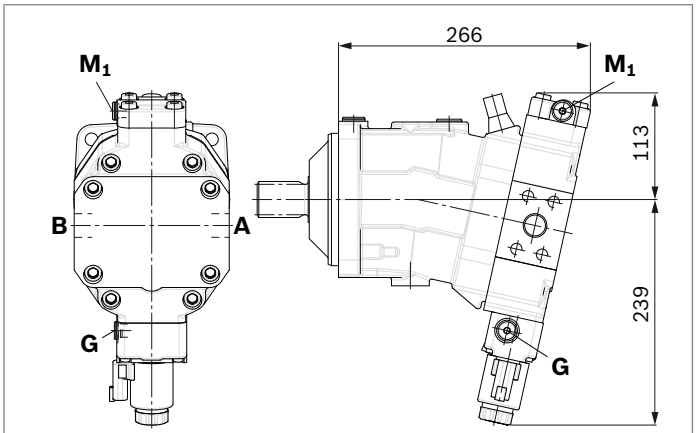

▼ **HA1R1, HA2R2** – Automatic high-pressure-related control, positive control, with override, electric and travel direction valve, electric

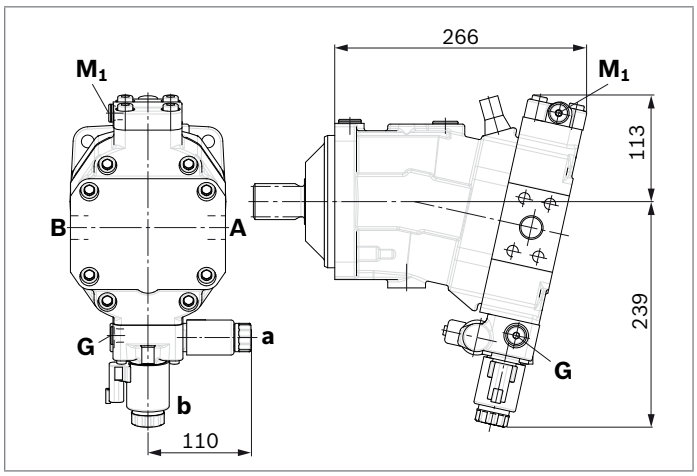

1) Port plate 1 – SAE working ports **A** and **B** at rear

▼ **DA0** – Automatic speed-related control, negative control, with hydraulic travel direction valve

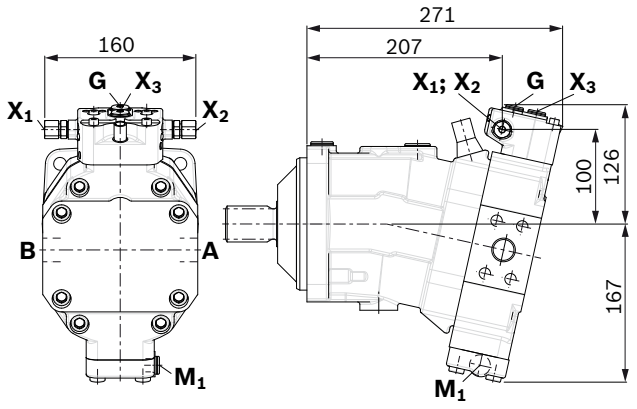

X$_1$, **X**$_2$ pipe fitting SDSC – L8×M12 – F according to ISO 8434-1

Use assembled fitting!

▼ **DA1, DA2** – Automatic speed-related control, negative control, with electric travel direction valve and electric $V_{g\,max}$ circuit

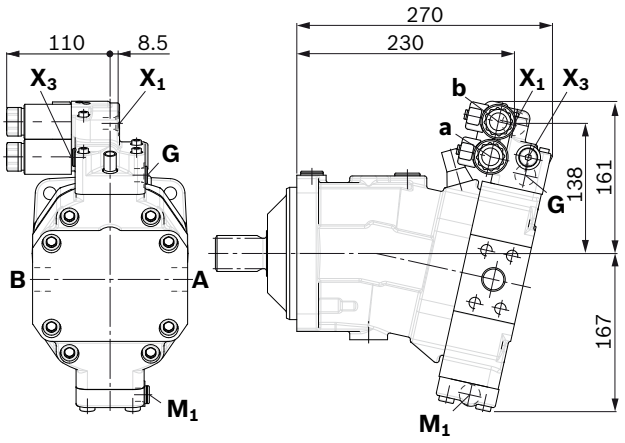

Dimensions size 107

EP5, EP6 – Proportional electric control, negative control

Port plate 2 — SAE working ports **A** and **B** at side, opposite

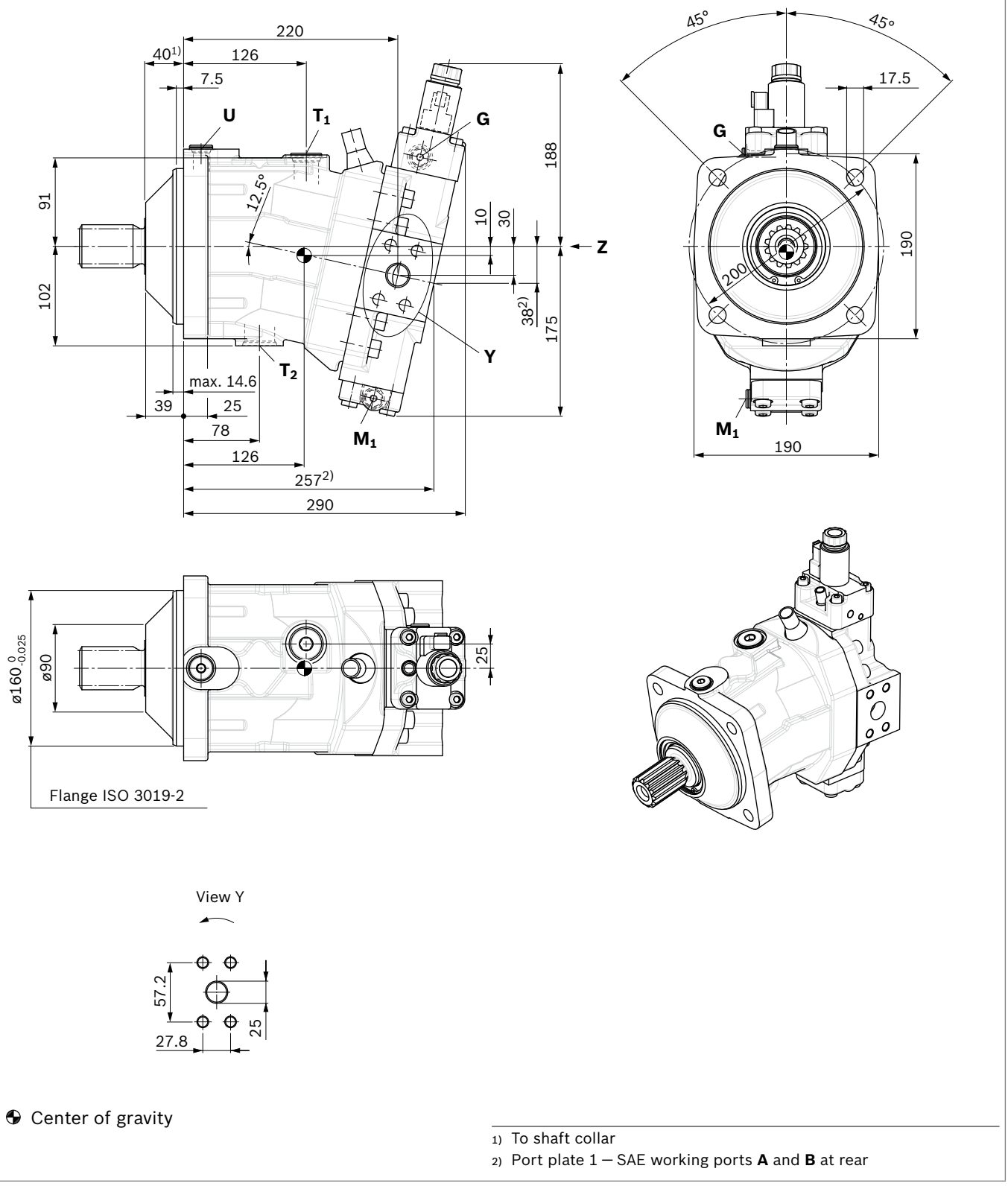

Center of gravity

1) To shaft collar

2) Port plate 1 — SAE working ports **A** and **B** at rear

▼ **Location of the service line ports on the port plates** (view **Z**)

2 SAE working port **A** and **B** at side, opposite

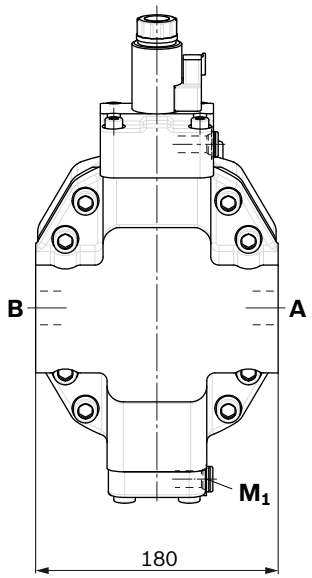

1 SAE working port **A** and **B** at rear

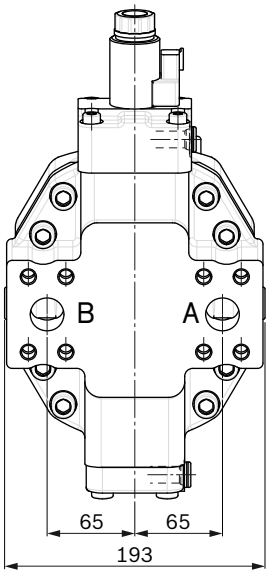

2 SAE working port **A** and **B** at side, opposite only HZ7, EZ7/8

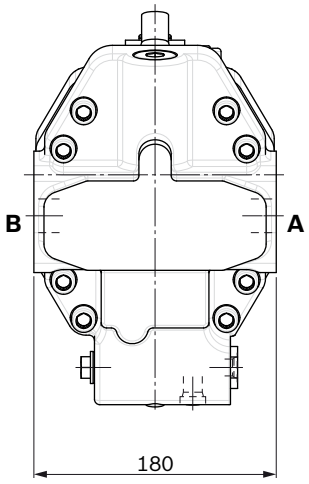

1 SAE working port **A** and **B** at rear only HZ7, EZ7/8

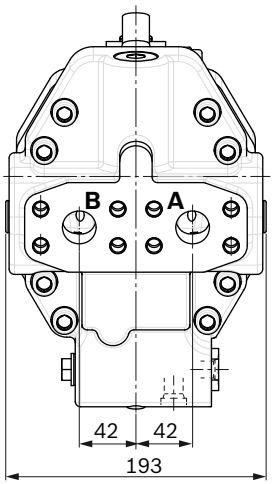

▼ **Splined shaft SAE J744**

T1 – 1 3/4 in 13T 8/16DP[1)]

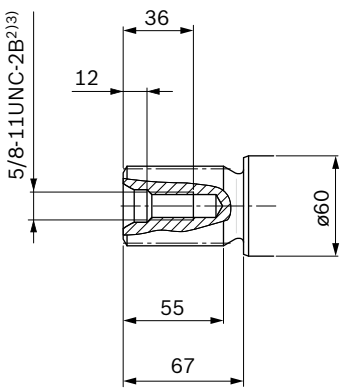

▼ **Splined shaft DIN 5480**

Z9 – W40×2×18×9g

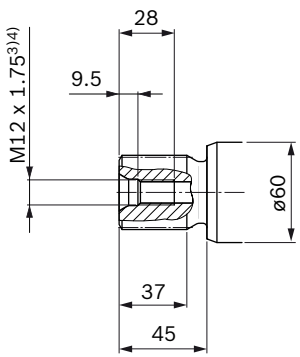

▼ **Splined shaft DIN 5480**

A1 – W45×2×21×9g

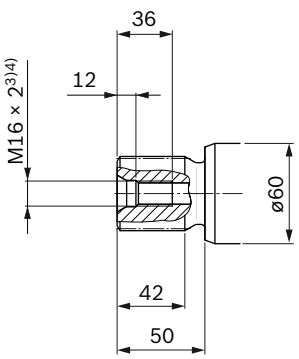

1) Involute spline acc. to ANSI B92.1a, 30° pressure angle, flat root, side fit, tolerance class 5
2) Thread according to ASME B1.1
3) For notes on tightening torques, see instruction manual
4) Center bore according to DIN 332 (thread according to DIN 13)

Ports		Standard	Size[1]	p_{max} [bar][2]	Status[6]
A, B	Working port Fastening thread A/B	SAE J518[3] DIN 13	1 in M12 × 1.75; 17 deep	450	O
T_1	Drain port	ISO 6149[5]	M27 × 2; 19 deep	3	X[4]
T_2	Drain port	ISO 6149[5]	M33 × 2; 19 deep	3	O[4]
G	Synchronous control	ISO 6149[5]	M14 × 1.5; 11.5 deep	450	X
U	Bearing flushing	ISO 6149[5]	M18 × 1.5; 14.5 deep	3	X
X	Pilot signal (HP, HZ, HA1T/HA2T)	ISO 6149[5]	M14 × 1.5; 11.5 deep	100	O
X	Pilot signal (HA1, HA2)	ISO 6149[5]	M14 × 1.5; 11.5 deep	3	X
X_1, X_2	Pilot signal (DA0)	ISO 8434-1	SDSC-L8×M12-F	40	O
X_1	Pilot signal (DA1, DA2)	ISO 6149[5]	M14 × 1.5; 11.5 deep	40	O
X_3	Pilot signal (DA1, DA2)	ISO 6149[5]	M14 × 1.5; 11.5 deep	40	X
M_1	Stroking chamber measurement	ISO 6149[5]	M14 × 1.5; 11.5 deep	450	X

1) For notes on tightening torques, see instruction manual
2) Depending on the application, momentary pressure peaks can occur. Keep this in mind when selecting measuring devices and fittings.
3) Only dimensions according to SAE J518, metric fastening thread is a deviation from standard.
4) Depending on installation position, **T_1** or **T_2** must be connected (see also installation instructions on page 72).
5) The countersink can be deeper than as specified in the standard.
6) O = Must be connected (plugged on delivery)
X = Plugged (in normal operation)

▼ **EP1, EP2** – Electric proportional control, positive control

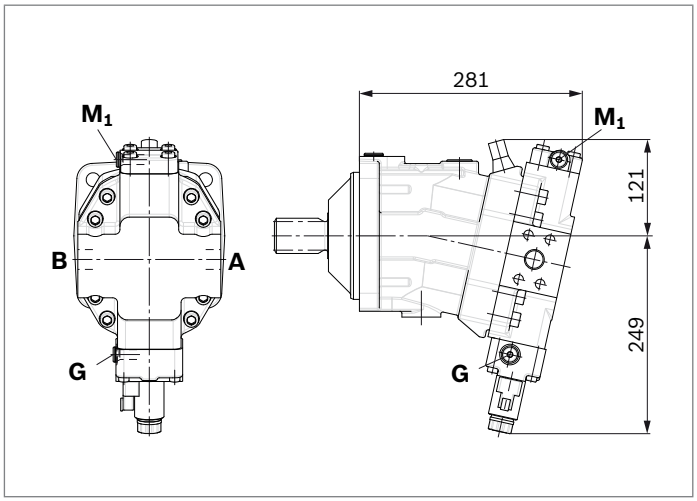

▼ **EP5D1, EP6D1** – Electric proportional control, negative control, with pressure control, fixed

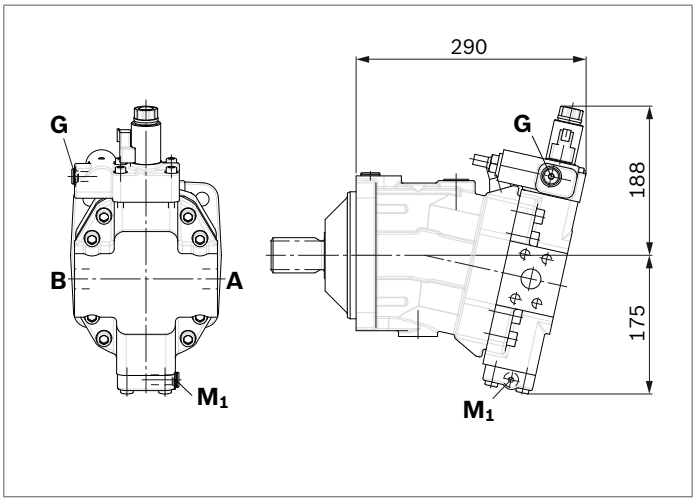

▼ **HP1, HP2** – Hydraulic proportional control, positive control

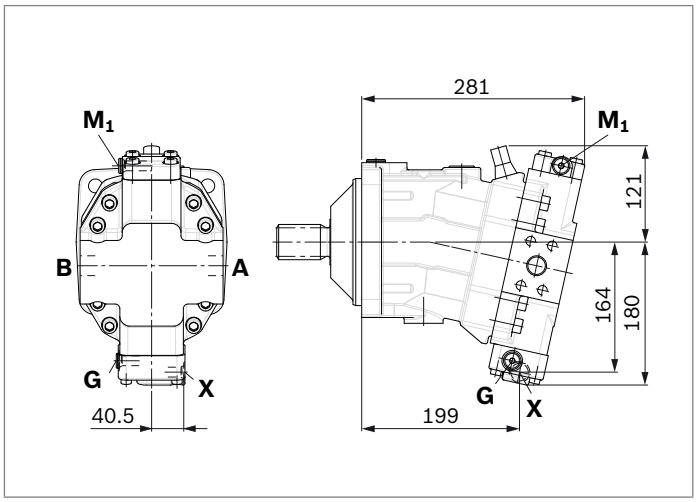

▼ **HP5, HP6** – Hydraulic proportional control, negative control

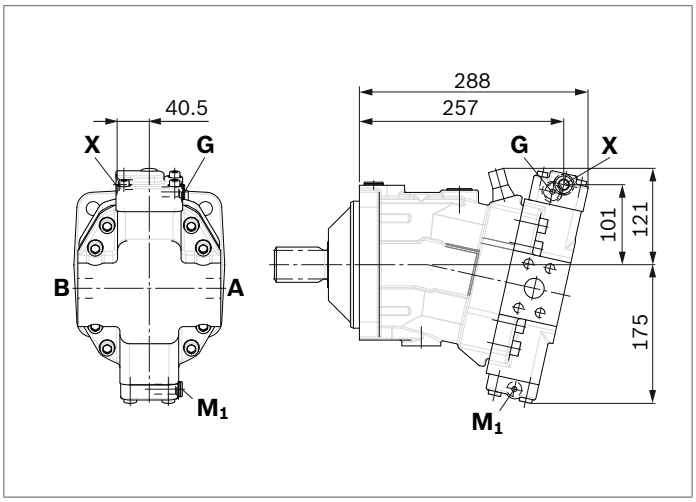

▼ **HP5D1, HP6D1** – Hydraulic proportional control, negative control, with pressure control, fixed

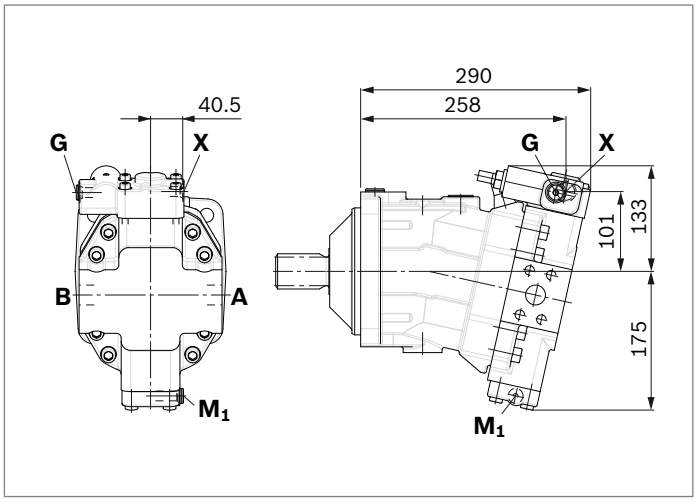

▼ **HZ7** – Hydraulic two-point control, negative control

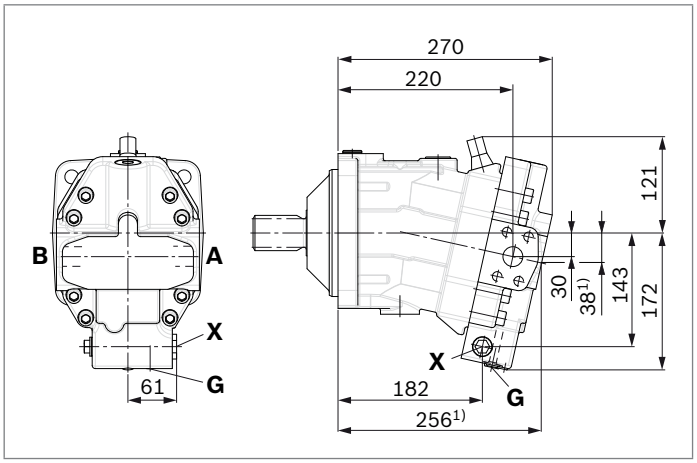

▼ **EZ7, EZ8** – Electric two-point control, negative control

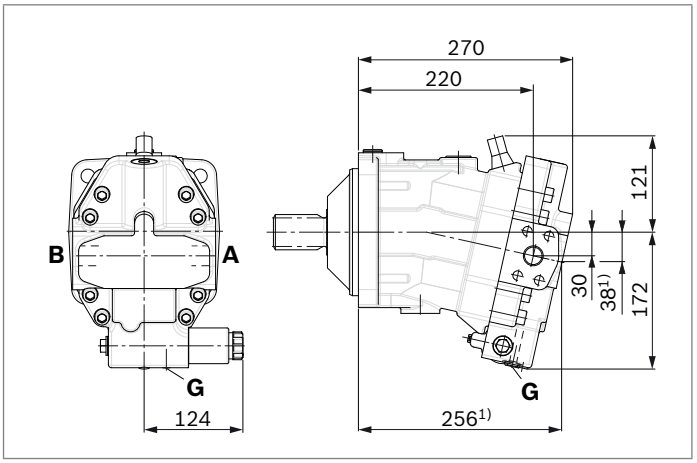

▼ **HA1, HA2 / HA1T3, HA2T3** – Automatic high-pressure-related control, positive control, with override hydraulic remote controlled, proportional

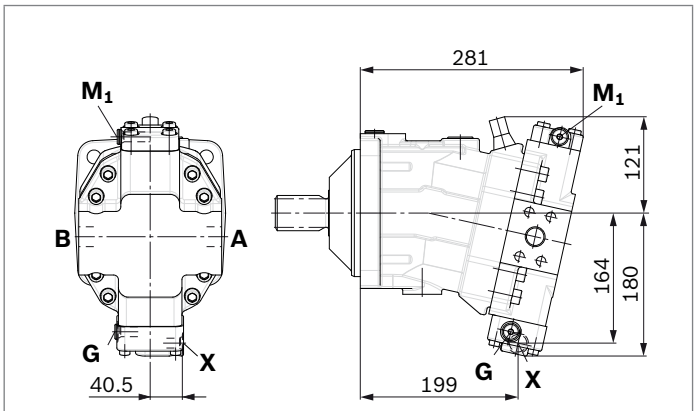

HA1 and HA2, **X** plugged

HA1T and HA2T, **X** open

▼ **HA1U1, HA2U2** – Automatic high-pressure-related control, positive control, with override, electric, two-point

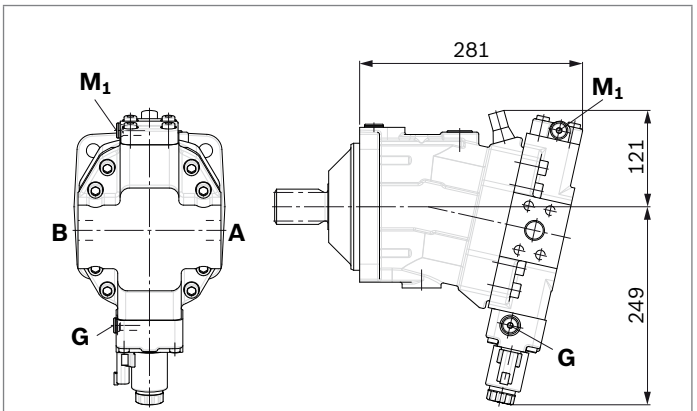

▼ **HA1R1, HA2R2** – Automatic high-pressure-related control, positive control, with override, electric and travel direction valve, electric

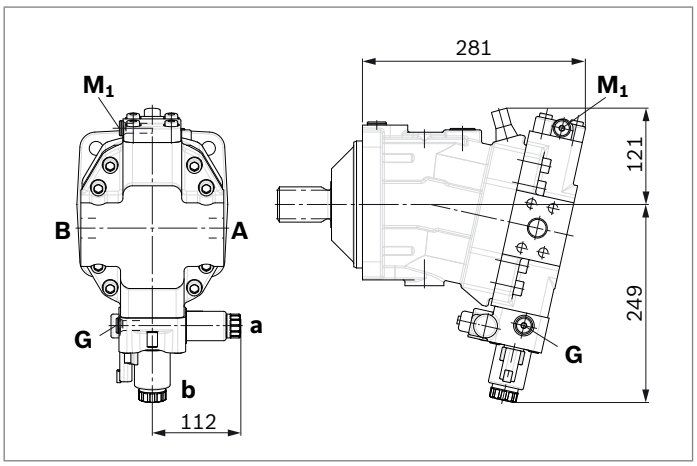

1) Port plate 1 – SAE working ports **A** and **B** at rear

▼ **DA0** – Automatic speed-related control, negative control, with hydraulic travel direction valve

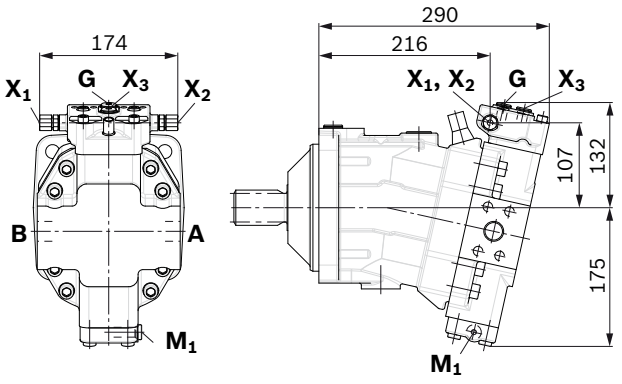

X$_1$, **X**$_2$ pipe fitting SDSC – L8×M12 – F according to ISO 8434-1
Use assembled fitting!

▼ **DA1, DA2** – Automatic speed-related control, negative control, with electric travel direction valve and electric $V_{g\,max}$ circuit

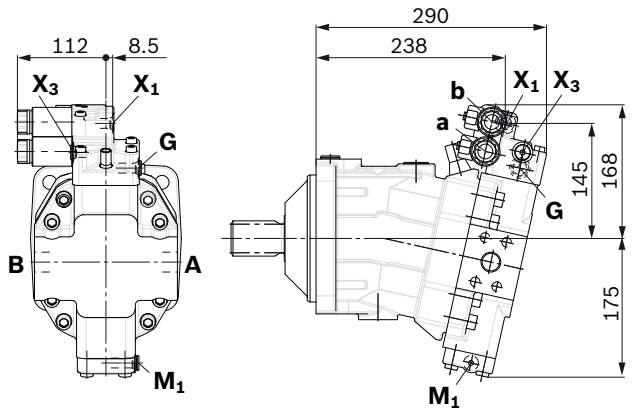

3

Dimensions size 140

EP5, EP6 – Proportional electric control, negative control

Port plate 2 — SAE working ports A and B at side, opposite

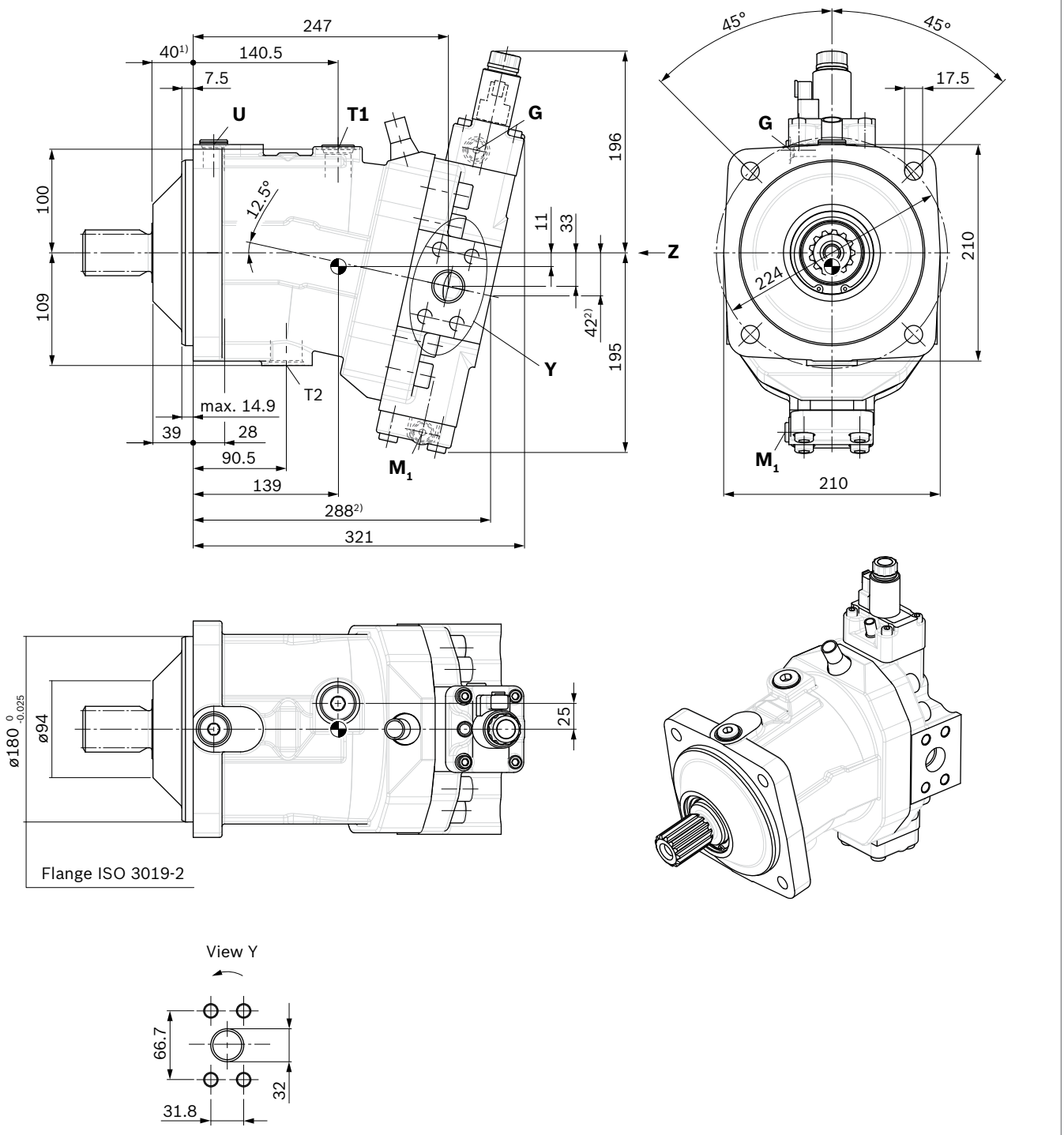

Center of gravity

1) To shaft collar

2) Port plate 1 — SAE working ports **A** and **B** at rear

▼ **Location of the service line ports on the port plates** (view **Z**)

2 SAE working port **A** and **B** at side, opposite

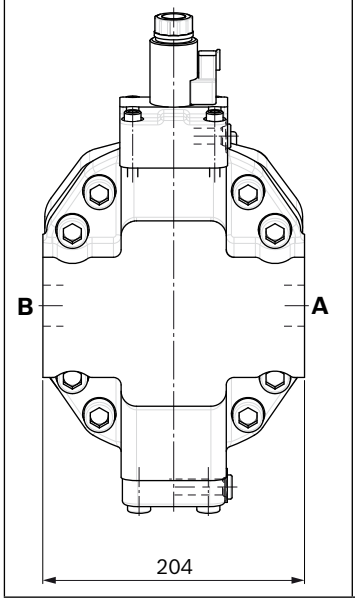

1 SAE working port **A** and **B** at rear

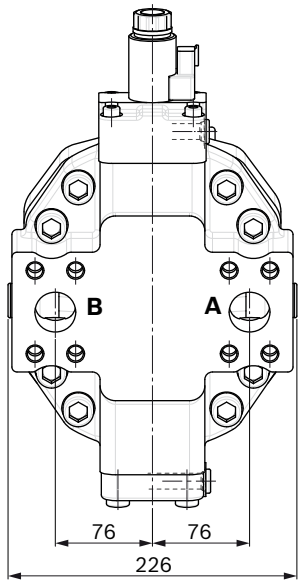

▼ **Splined shaft SAE J744**

T1 – 1 3/4 in 13T 8/16DP[1)]

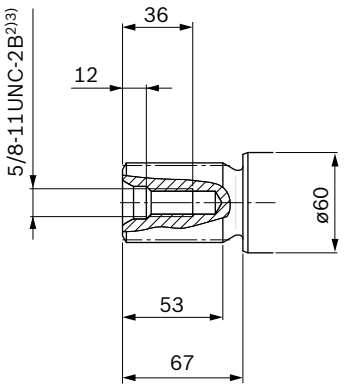

▼ **Splined shaft DIN 5480**

A1 – W45×2×21×9g

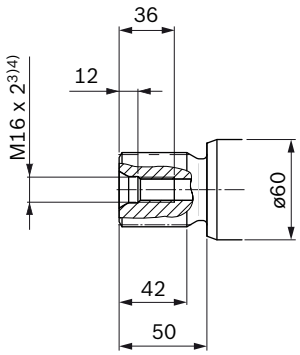

1) Involute spline acc. to ANSI B92.1a, 30° pressure angle, flat root, side fit, tolerance class 5
2) Thread according to ASME B1.1
3) For notes on tightening torques, see instruction manual
4) Center bore according to DIN 332 (thread according to DIN 13)

R_91_07_06_01_ Bosch Rexroth AG

Ports		Standard	Size[1]	p_{max} [bar][2]	Status[6]
A, B	Working port Fastening thread A/B	SAE J518[3] DIN 13	1 1/4 in M14 × 2; 19 deep	450	O
T_1	Drain port	ISO 6149[5]	M27 × 2; 19 deep	3	X[4]
T_2	Drain port	ISO 6149[5]	M33 × 2; 19 deep	3	O[4]
G	Synchronous control	ISO 6149[5]	M14 × 1.5; 11.5 deep	450	X
U	Bearing flushing	ISO 6149[5]	M22 × 1.5; 15.5 deep	3	X
X	Pilot signal (HP, HZ, HA1T/HA2T)	ISO 6149[5]	M14 × 1.5; 11.5 deep	100	O
X	Pilot signal (HA1, HA2)	ISO 6149[5]	M14 × 1.5; 11.5 deep	3	X
X_1, X_2	Pilot signal (DA0)	ISO 8434-1	SDSC-L8×M12-F	40	O
X_1	Pilot signal (DA1, DA2)	ISO 6149[5]	M14 × 1.5; 11.5 deep	40	O
X_3	Pilot signal (DA1, DA2)	ISO 6149[5]	M14 × 1.5; 11.5 deep	40	X
M_1	Stroking chamber measurement	ISO 6149[5]	M14 × 1.5; 11.5 deep	450	X

1) For notes on tightening torques, see instruction manual
2) Depending on the application, momentary pressure peaks can occur. Keep this in mind when selecting measuring devices and fittings.
3) Only dimensions according to SAE J518, metric fastening thread is a deviation from standard.
4) Depending on installation position, **T_1** or **T_2** must be connected (see also installation instructions on page 72).
5) The countersink can be deeper than as specified in the standard.
6) O = Must be connected (plugged on delivery)
X = Plugged (in normal operation)

▼ **EP1, EP2** – Electric proportional control, positive control

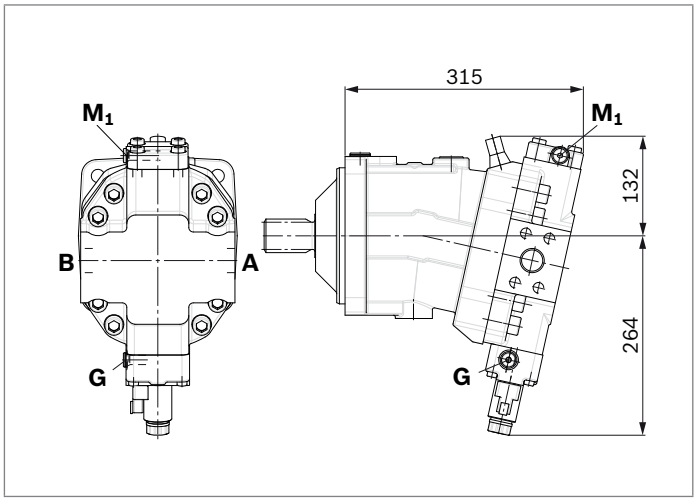

▼ **EP5D1, EP6D1** – Electric proportional control, negative control, with pressure control, fixed

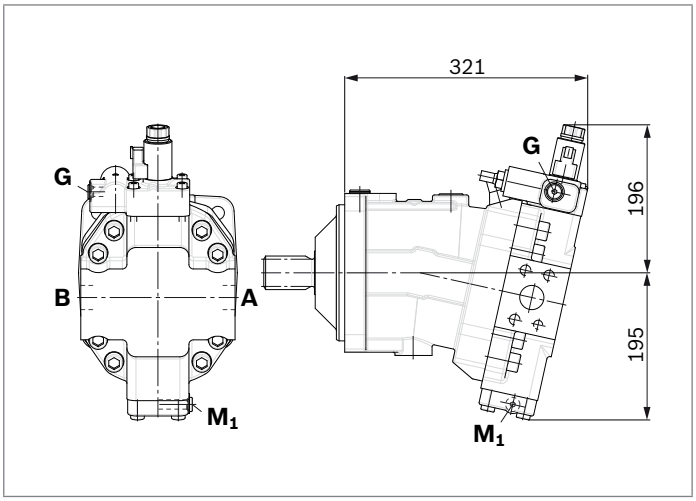

▼ **HP1, HP2** – Hydraulic proportional control, positive control

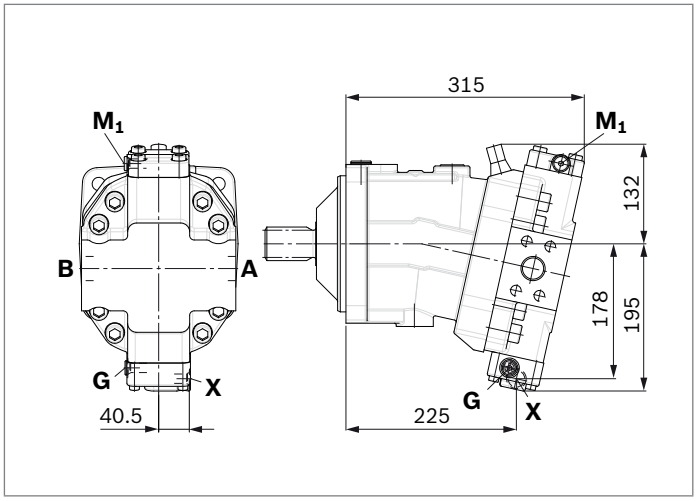

▼ **HP5, HP6** – Hydraulic proportional control, negative control

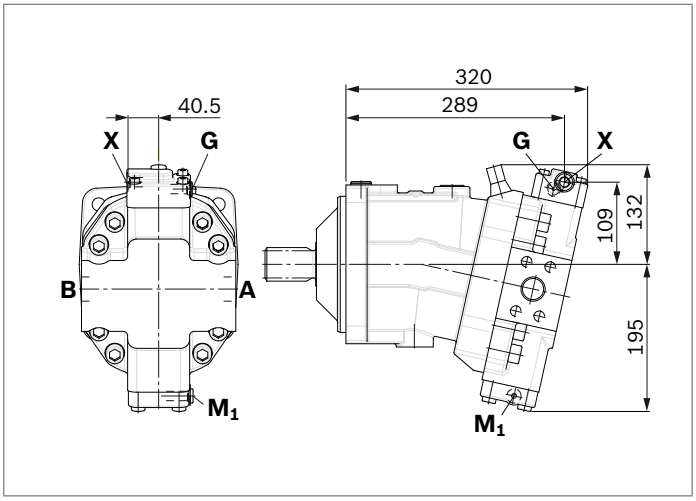

▼ **HP5D1, HP6D1** – Hydraulic proportional control, negative control, with pressure control, fixed

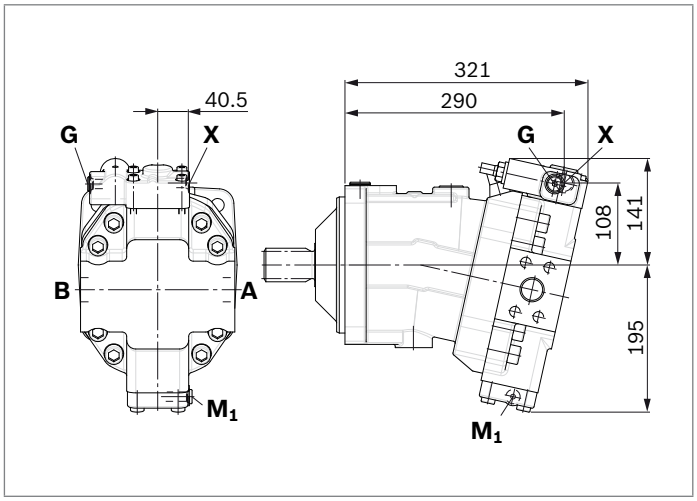

▼ **HZ5** – Hydraulic two-point control, negative control

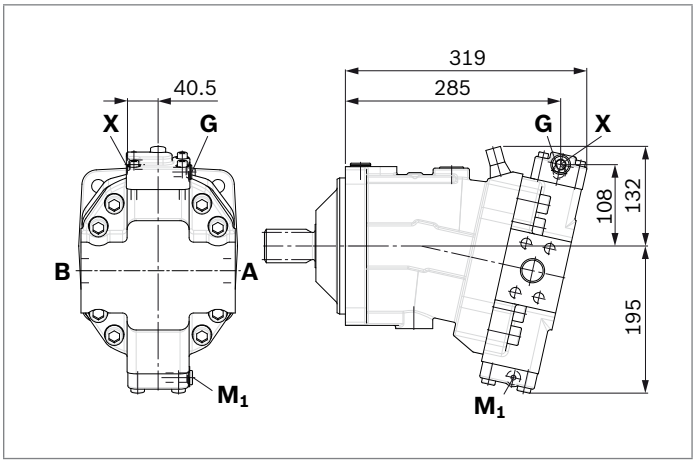

▼ **EZ5, EZ6** – Electric two-point control, negative control

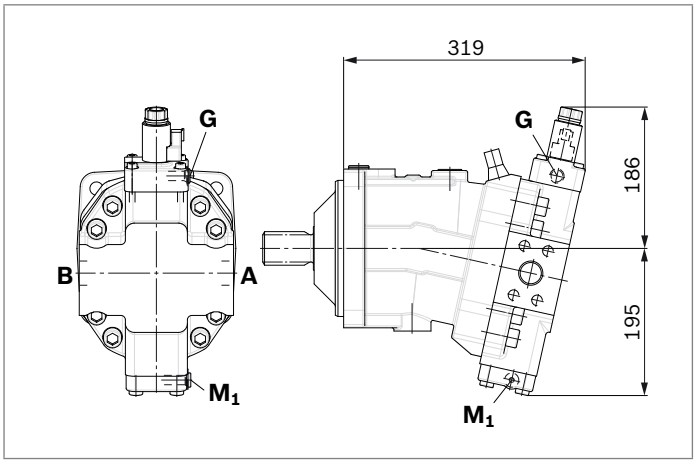

▼ **HA1, HA2 / HA1T3, HA2T3** – Automatic high-pressure-related control, positive control, with override hydraulic remote controlled, proportional

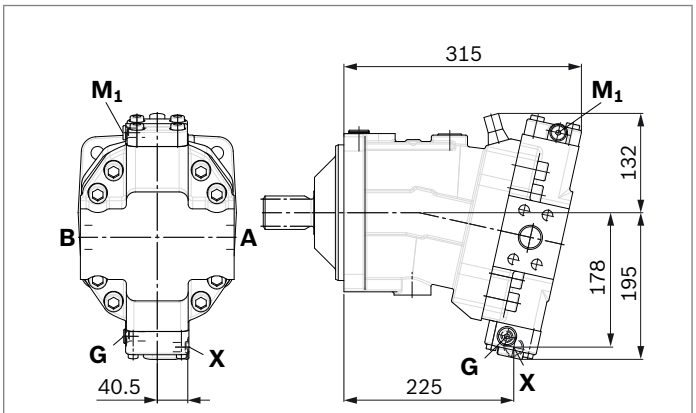

HA1 and HA2, **X** plugged

HA1T and HA2T, **X** open

▼ **HA1U1, HA2U2** – Automatic high-pressure-related control, positive control, with override, electric, two-point

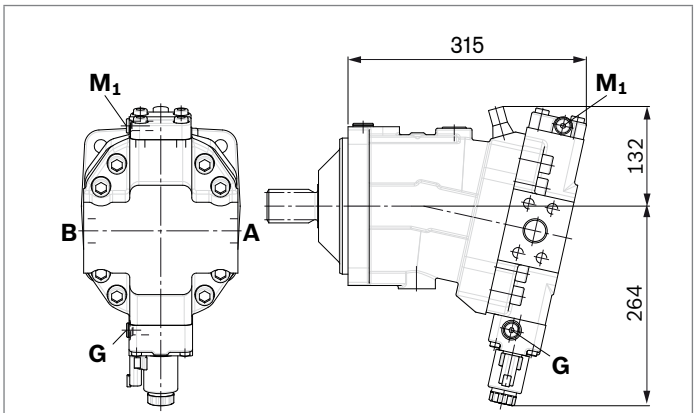

▼ **HA1R1, HA2R2** – Automatic high-pressure-related control, positive control, with override, electric and travel direction valve, electric

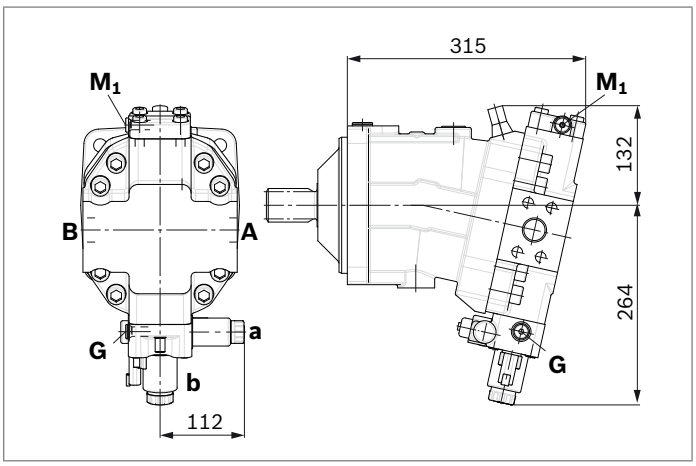

▼ **DA0** – Automatic speed-related control, negative control, with hydraulic travel direction valve

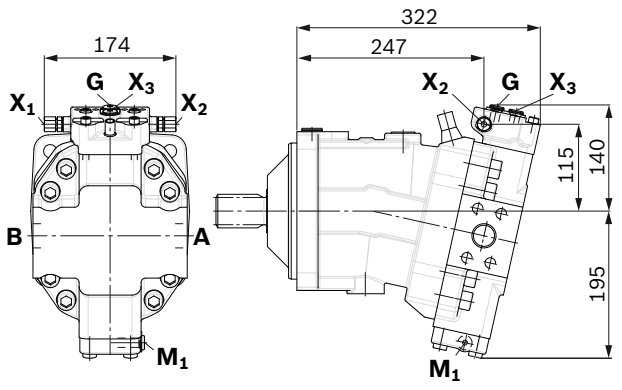

X$_1$, **X**$_2$ pipe fitting SDSC – L8×M12 – F according to ISO 8434-1

Use assembled fitting!

▼ **DA1, DA2** – Automatic speed-related control, negative control, with electric travel direction valve and electric $V_{g\,max}$ circuit

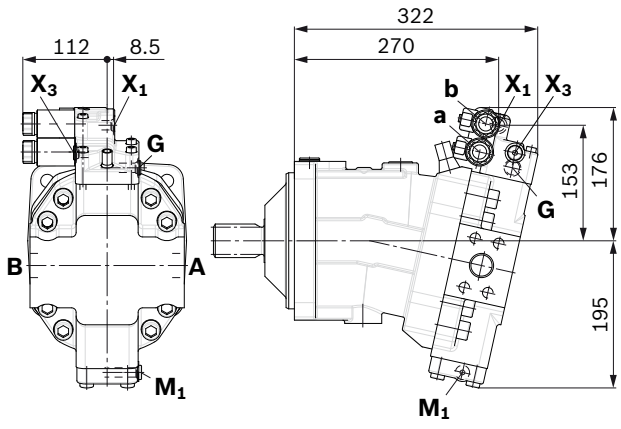

Dimensions size 160

EP5, EP6 – Proportional electric control, negative control

Port plate 2 — SAE working ports **A** and **B** at side, opposite

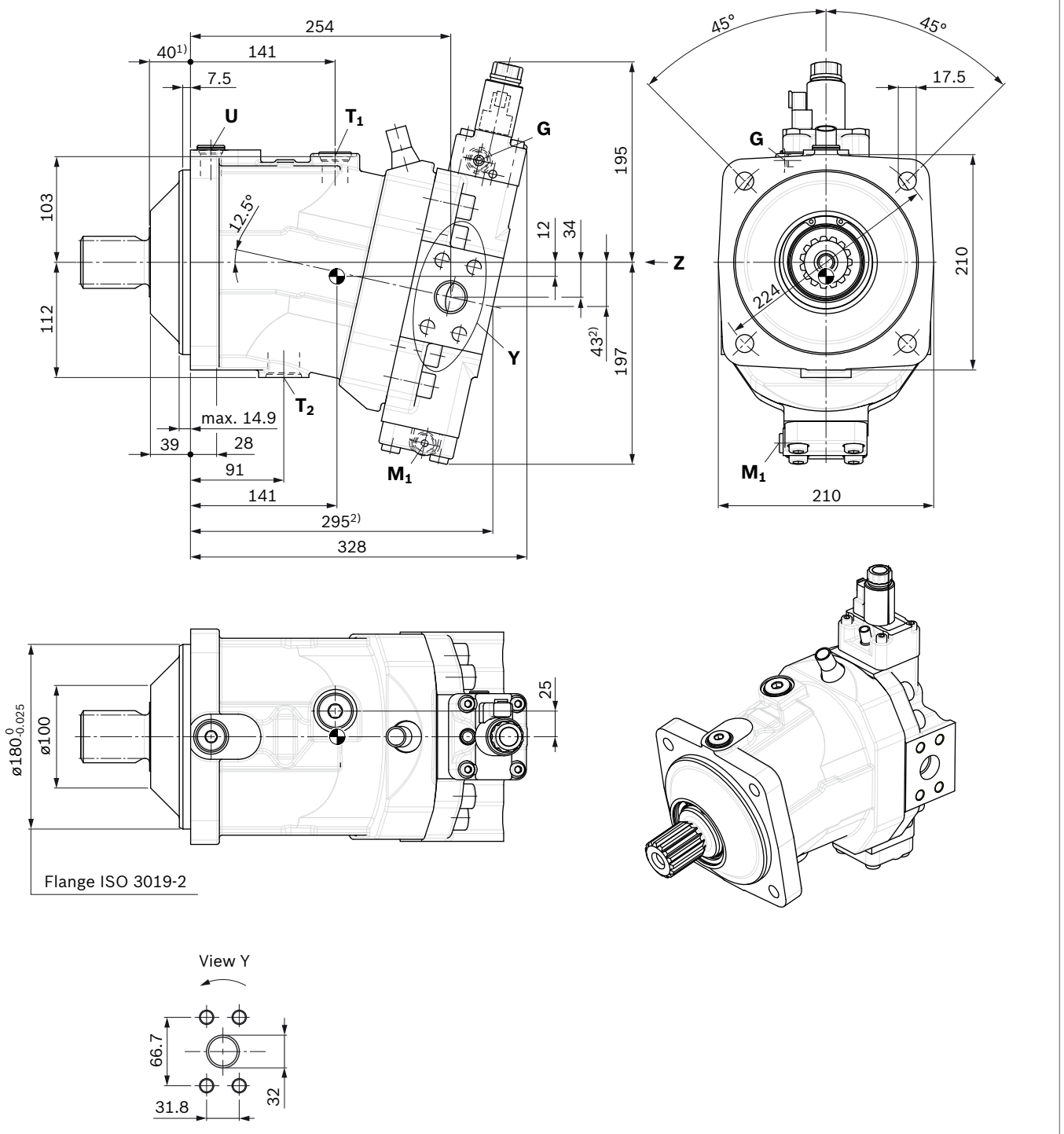

Center of gravity

1) To shaft collar

2) Port plate 1 — SAE working ports **A** and **B** at rear

▼ **Location of the service line ports on the port plates** (view **Z**)

2 SAE working port **A** and **B** at side, opposite

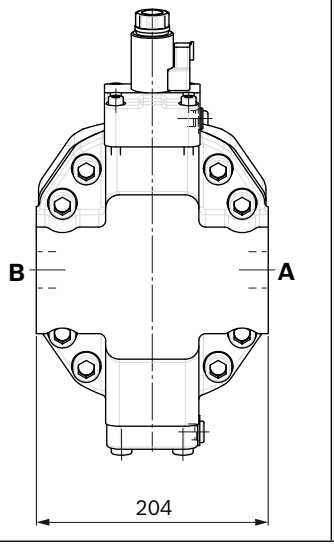

1 SAE working port **A** and **B** at rear

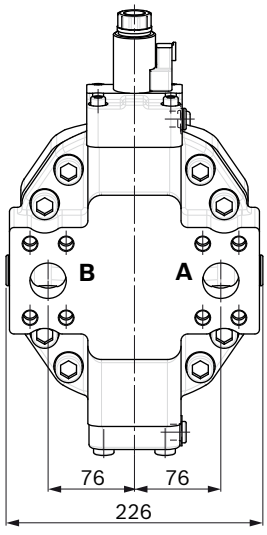

▼ **Splined shaft SAE J744**

T2 – 2 in 15T 8/16DP[1)]

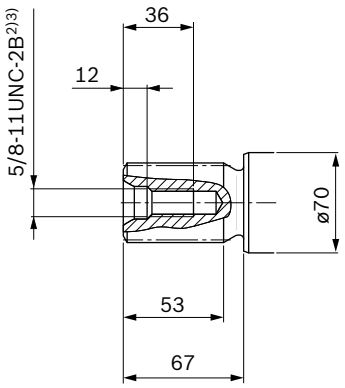

▼ **Splined shaft DIN 5480**

A1 – W45×2×21×9g

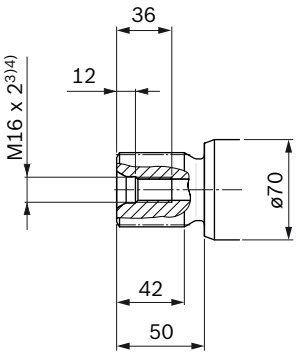

▼ **Splined shaft DIN 5480**

A2 – W50×2×24×9g

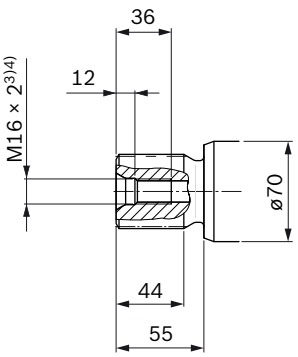

1) Involute spline acc. to ANSI B92.1a, 30° pressure angle, flat root, side fit, tolerance class 5
2) Thread according to ASME B1.1
3) For notes on tightening torques, see instruction manual
4) Center bore according to DIN 332 (thread according to DIN 13)

RE 91607/06.2012, Bosch Rexroth AG

Ports		Standard	Size[1]	p_{max} [bar][2]	Status[6]
A, B	Working port Fastening thread A/B	SAE J518[3] DIN 13	1 1/4 in M14 × 2; 19 deep	450	O
T_1	Drain port	ISO 6149[5]	M27 × 2; 19 deep	3	X[4]
T_2	Drain port	ISO 6149[5]	M33 × 2; 19 deep	3	O[4]
G	Synchronous control	ISO 6149[5]	M14 × 1.5; 11.5 deep	450	X
U	Bearing flushing	ISO 6149[5]	M22 × 1.5; 15.5 deep	3	X
X	Pilot signal (HP, HZ, HA1T/HA2T)	ISO 6149[5]	M14 × 1.5; 11.5 deep	100	O
X	Pilot signal (HA1, HA2)	ISO 6149[5]	M14 × 1.5; 11.5 deep	3	X
X_1, X_2	Pilot signal (DA0)	ISO 8434-1	SDSC-L8×M12-F	40	O
X_1	Pilot signal (DA1, DA2)	ISO 6149[5]	M14 × 1.5; 11.5 deep	40	O
X_3	Pilot signal (DA1, DA2)	ISO 6149[5]	M14 × 1.5; 11.5 deep	40	X
M_1	Stroking chamber measurement	ISO 6149[5]	M14 × 1.5; 11.5 deep	450	X

1) For notes on tightening torques, see instruction manual
2) Depending on the application, momentary pressure peaks can occur. Keep this in mind when selecting measuring devices and fittings.
3) Only dimensions according to SAE J518, metric fastening thread is a deviation from standard.
4) Depending on installation position, **T_1** or **T_2** must be connected (see also installation instructions on page 72).
5) The countersink can be deeper than as specified in the standard.
6) O = Must be connected (plugged on delivery)
X = Plugged (in normal operation)

▼ **EP1, EP2** – Electric proportional control, positive control

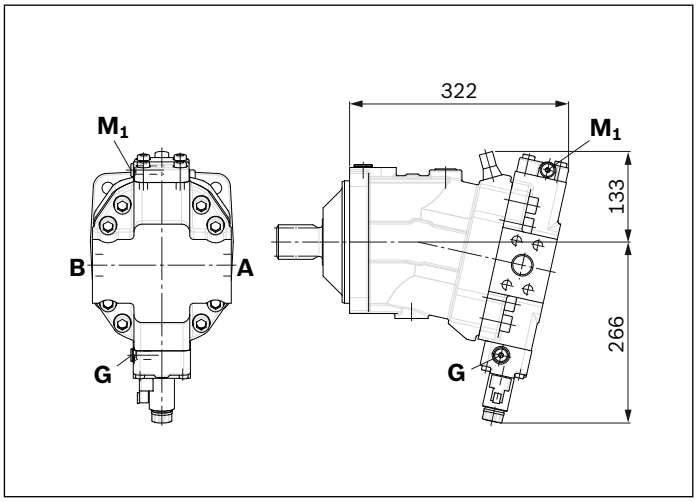

▼ **EP5D1, EP6D1** – Electric proportional control, negative control, with pressure control, fixed

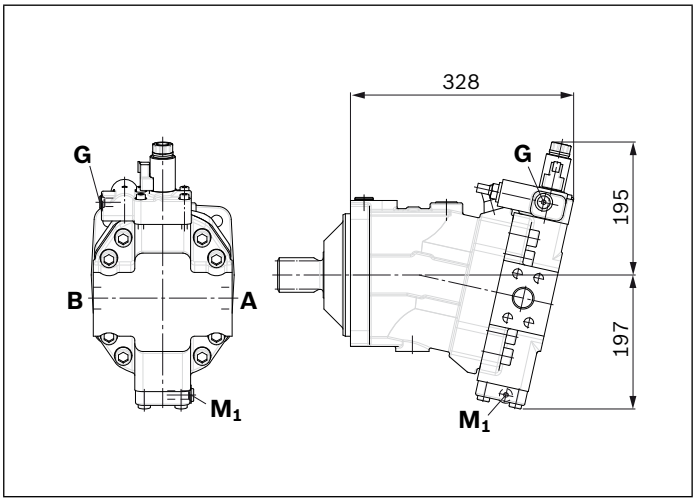

▼ **HP1, HP2** – Hydraulic proportional control, positive control

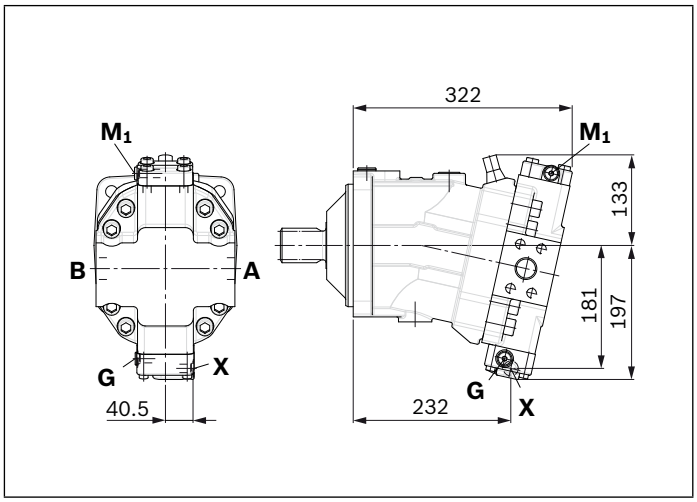

▼ **HP5, HP6** – Hydraulic proportional control, negative control

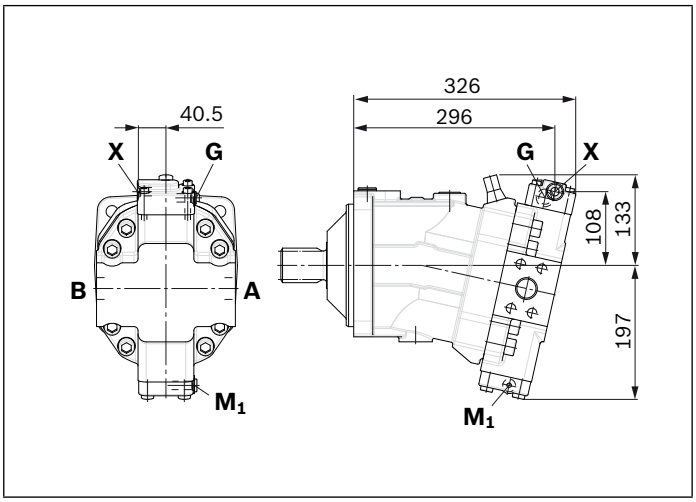

▼ **HP5D1, HP6D1** – Hydraulic proportional control, negative control, with pressure control, fixed

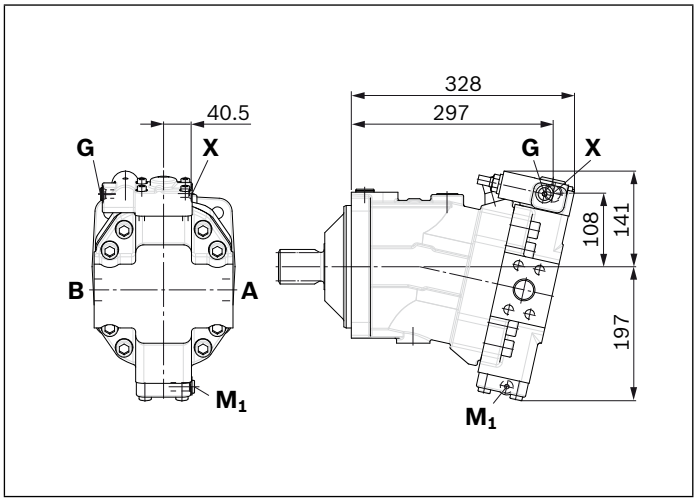

▼ **HZ5** – Hydraulic two-point control, negative control

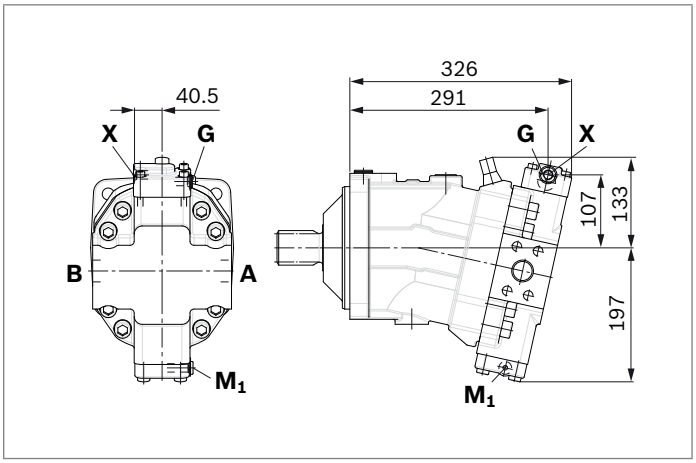

▼ **EZ5, EZ6** – Electric two-point control, negative control

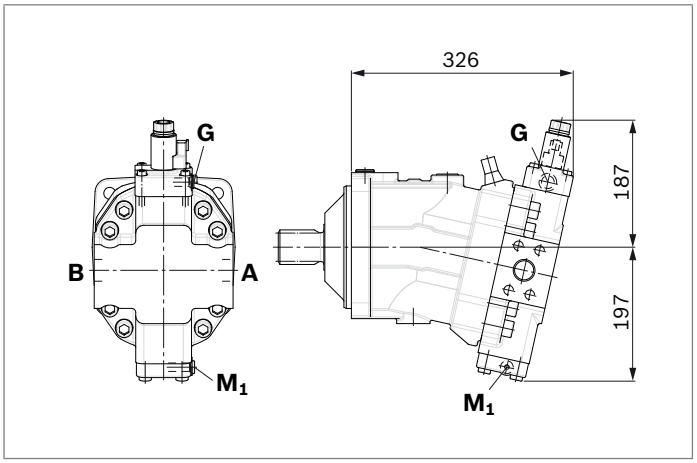

▼ **HA1, HA2 / HA1T3, HA2T3** – Automatic high-pressure-related control, positive control, with override hydraulic remote controlled, proportional

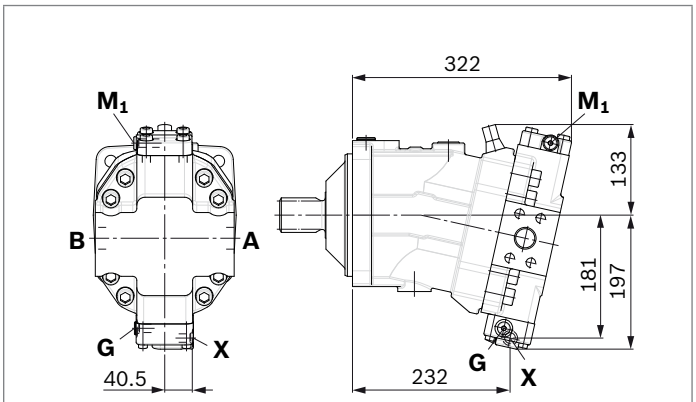

HA1 and HA2, **X** plugged

HA1T and HA2T, **X** open

▼ **HA1U1, HA2U2** – Automatic high-pressure-related control, positive control, with override, electric, two-point

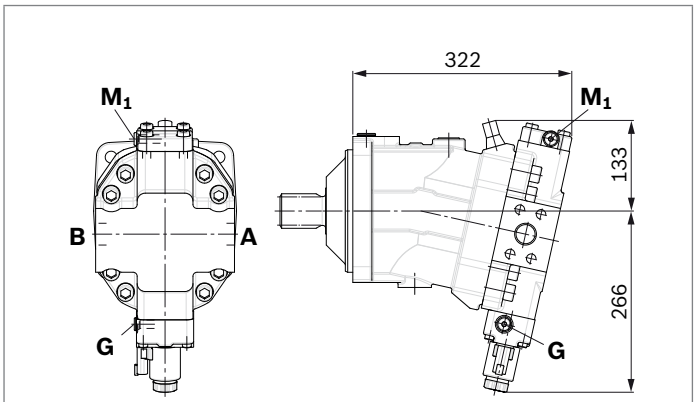

▼ **HA1R1, HA2R2** – Automatic high-pressure-related control, positive control, with override, electric and travel direction valve, electric

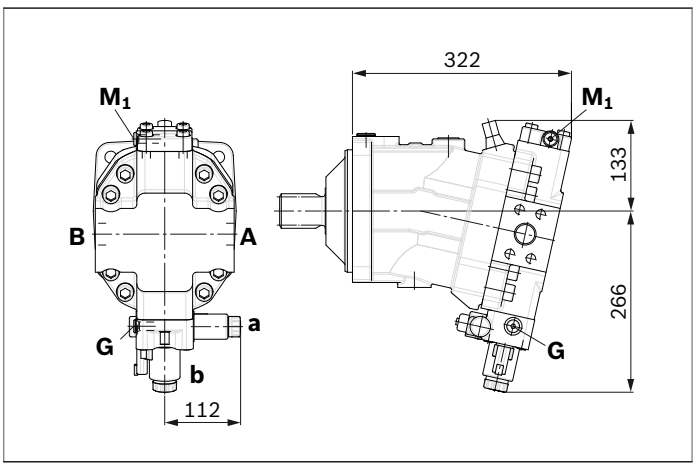

▼ **DA0** – Automatic speed-related control, negative control, with hydraulic travel direction valve

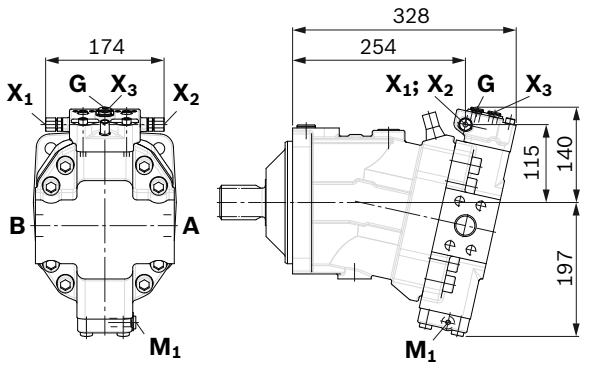

X1, **X2** pipe fitting SDSC – L8×M12 – F according to ISO 8434-1

Use assembled fitting!

▼ **DA1, DA2** – Automatic speed-related control, negative control, with electric travel direction valve and electric $V_{g\,max}$ circuit

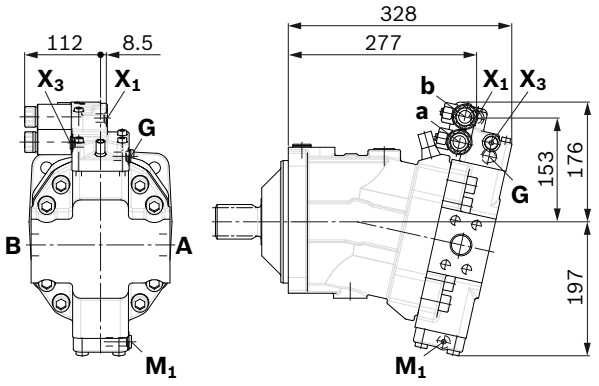

Dimensions size 200

EP5, EP6 – Proportional electric control, negative control

Port plate 2 — SAE working ports **A** and **B** at side, opposite

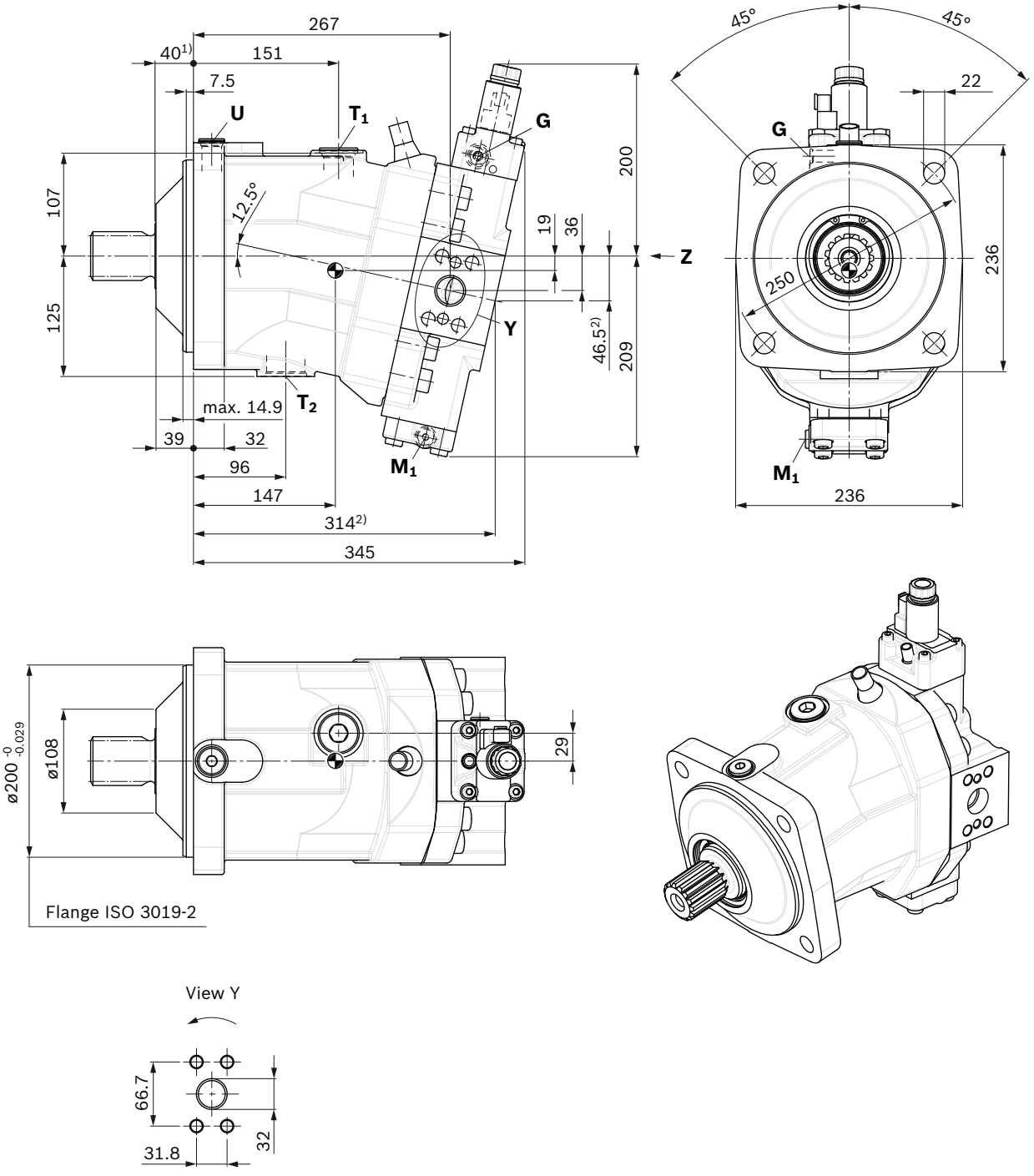

Center of gravity

1) To shaft collar

2) Port plate 1 — SAE working ports **A** and **B** at rear

▼ **Location of the service line ports on the port plates** (view **Z**)

2 SAE working port **A** and **B** at side, opposite

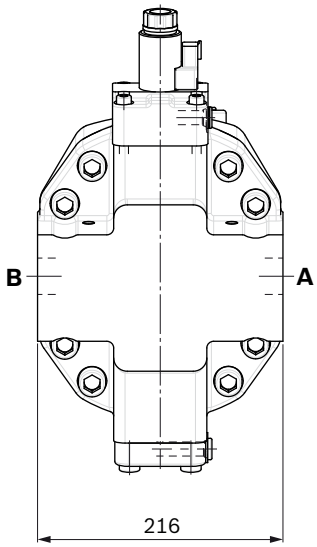

1 SAE working port **A** and **B** at rear

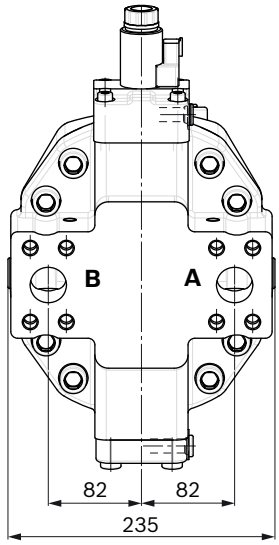

▼ **Splined shaft SAE J744**

T2 – 2 in 15T 8/16DP[1)]

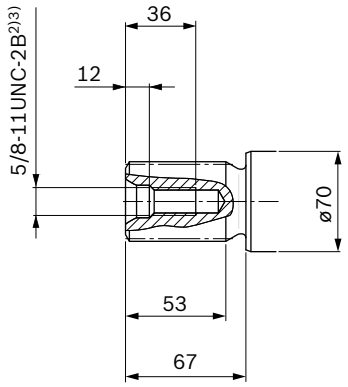

▼ **Splined shaft DIN 5480**

A2 – W50×2×24×9g

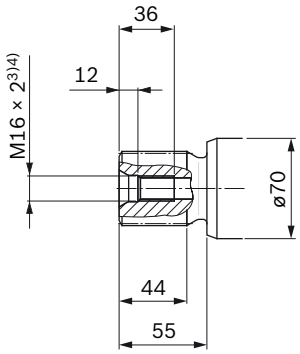

1) Involute spline acc. to ANSI B92.1a, 30° pressure angle, flat root, side fit, tolerance class 5
2) Thread according to ASME B1.1
3) For notes on tightening torques, see instruction manual
4) Center bore according to DIN 332 (thread according to DIN 13)

Ports		Standard	Size[1]	p_{max} [bar][2]	Status[6]
A, B	Working port Fastening thread A/B	SAE J518[3] DIN 13	1 1/4 in M14 × 2; 19 deep	450	O
T_1	Drai port	ISO 6149[5]	M33 × 2; 19 deep	3	X[4]
T_2	Drain port	ISO 6149[5]	M42 × 2; 19.5 deep	3	O[4]
G	Synchronous control	ISO 6149[5]	M14 × 1.5; 11.5 deep	450	X
U	Bearing flushing	ISO 6149[5]	M22 × 1.5; 15.5 deep	3	X
X	Pilot signal (HP, HZ, HA1T/HA2T)	ISO 6149[5]	M14 × 1.5; 11.5 deep	100	O
X	Pilot signal (HA1, HA2)	ISO 6149[5]	M14 × 1.5; 11.5 deep	3	X
X_1, X_2	Pilot signal (DA0)	ISO 8434-1	SDSC-L8×M12-F	40	O
X_1	Pilot signal (DA1, DA2)	ISO 6149[5]	M14 × 1.5; 11.5 deep	40	O
X_3	Pilot signal (DA1, DA2)	ISO 6149[5]	M14 × 1.5; 11.5 deep	40	X
M_1	Stroking chamber measurement	ISO 6149[5]	M14 × 1.5; 11.5 deep	450	X

1) For notes on tightening torques, see instruction manual
2) Depending on the application, momentary pressure peaks can occur. Keep this in mind when selecting measuring devices and fittings.
3) Only dimensions according to SAE J518, metric fastening thread is a deviation from standard.
4) Depending on installation position, **T_1** or **T_2** must be connected (see also installation instructions on page 72).
5) The countersink can be deeper than as specified in the standard.
6) O = Must be connected (plugged on delivery)
X = Plugged (in normal operation)

▼ **EP1, EP2** – Electric proportional control, positive control

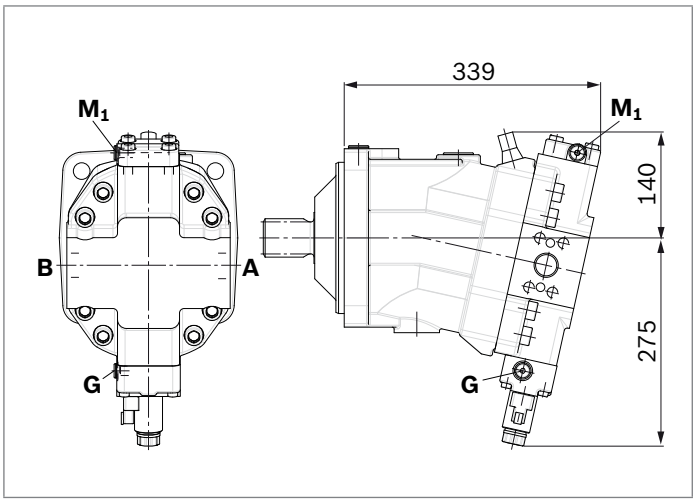

▼ **EP5D1, EP6D1** – Electric proportional control, negative control, with pressure control, fixed

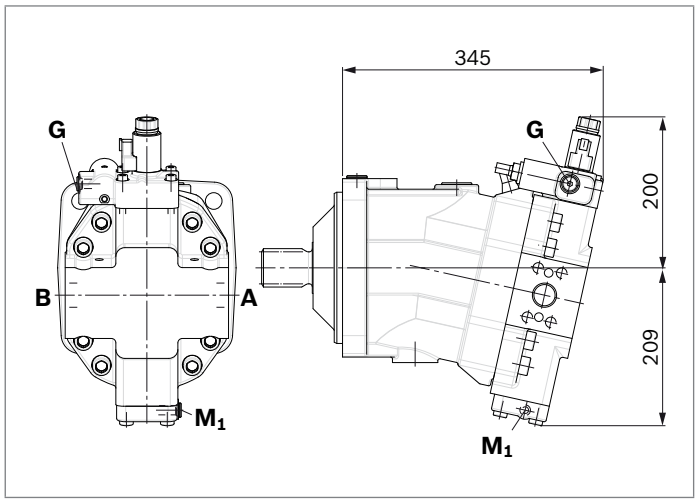

▼ **HP1, HP2** – Hydraulic proportional control, positive control

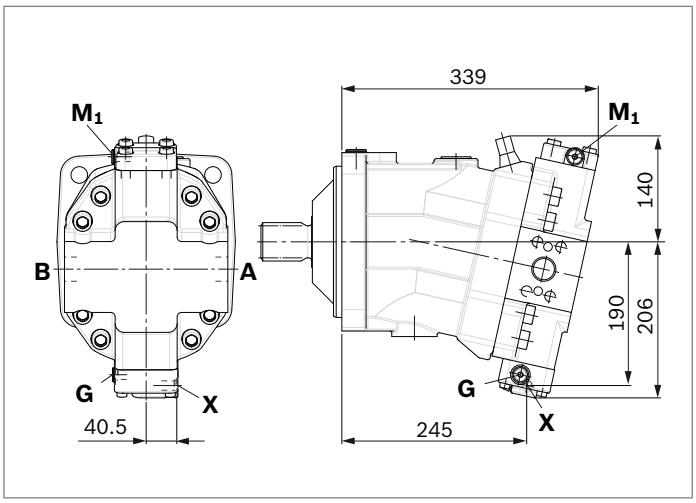

▼ **HP5, HP6** – Hydraulic proportional control, negative control

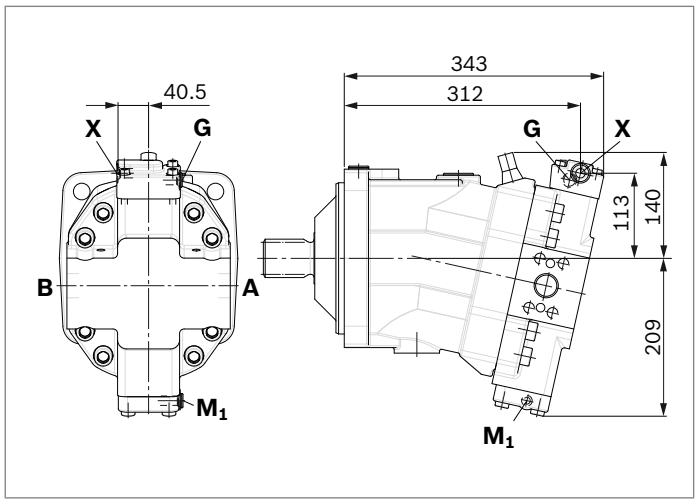

▼ **HP5D1, HP6D1** – Hydraulic proportional control, negative control, with pressure control, fixed

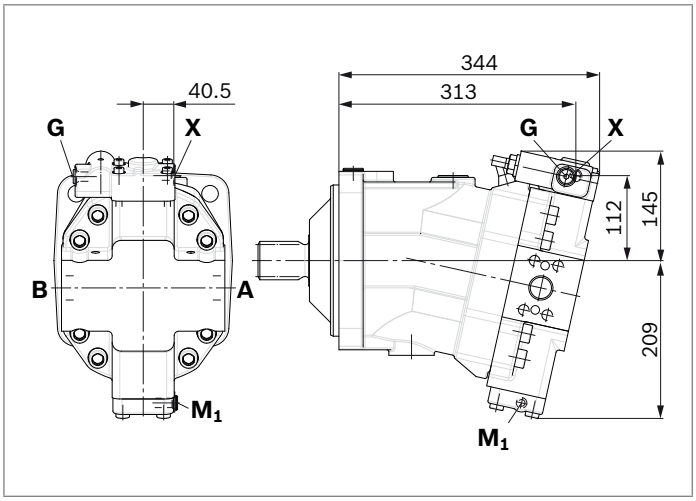

▼ **HZ5** – Hydraulic two-point control, negative control

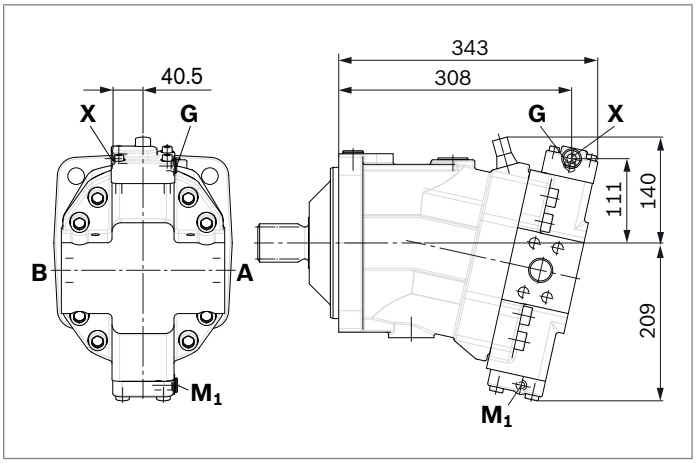

▼ **EZ5, EZ6** – Electric two-point control, negative control

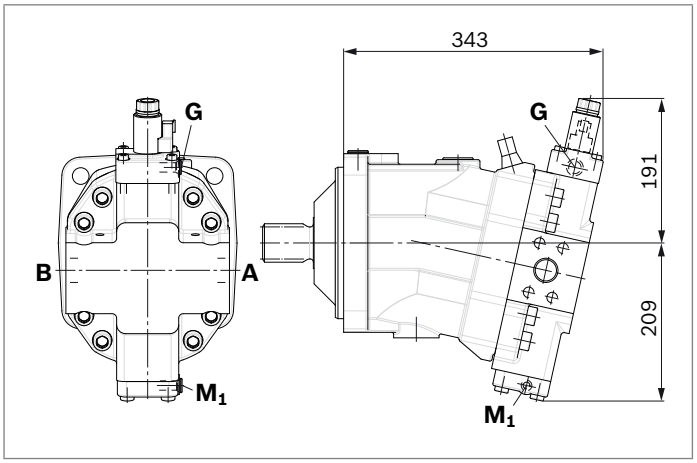

▼ **HA1, HA2 / HA1T3, HA2T3** – Automatic high-pressure-related control, positive control, with override hydraulic remote controlled, proportional

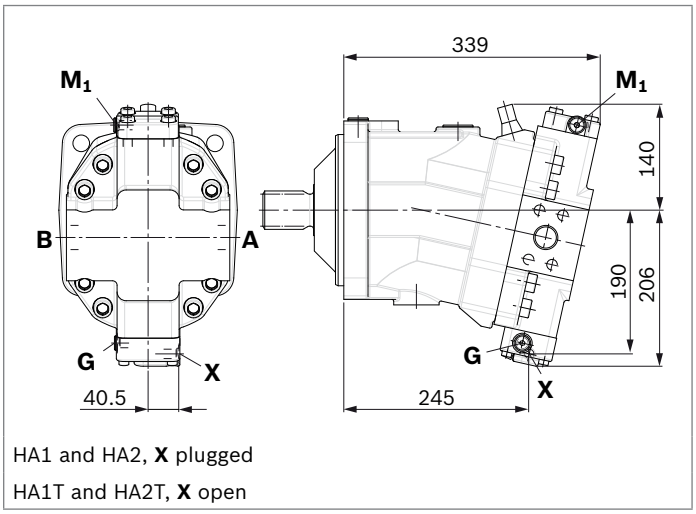

HA1 and HA2, **X** plugged

HA1T and HA2T, **X** open

▼ **HA1U1, HA2U2** – Automatic high-pressure-related control, positive control, with override, electric, two-point

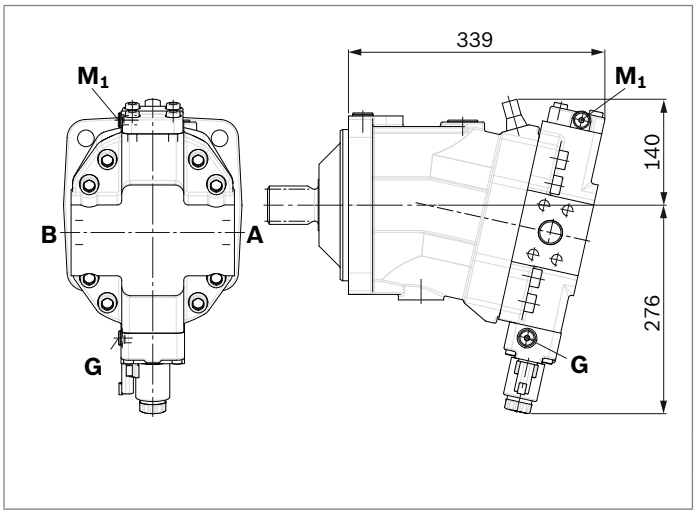

▼ **HA1R1, HA2R2** – Automatic high-pressure-related control, positive control, with override, electric and travel direction valve, electric

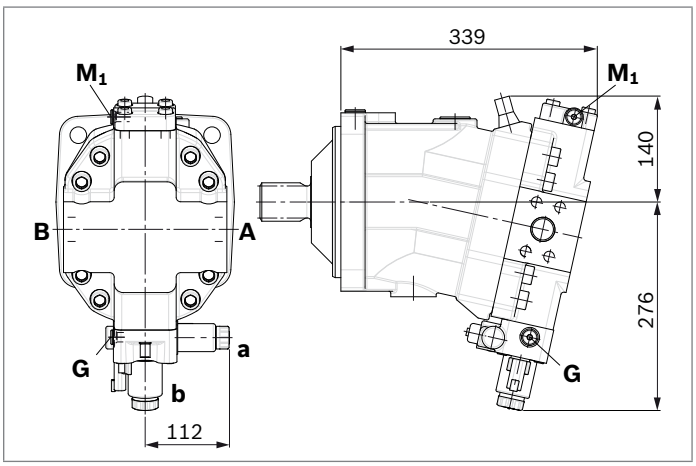

▼ **DA0** – Automatic speed-related control, negative control, with hydraulic travel direction valve

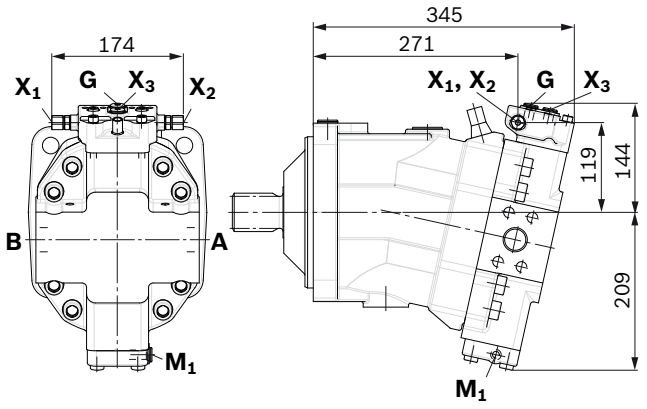

X_1, **X_2** pipe fitting SDSC – L8×M12 – F according to ISO 8434-1

Use assembled fitting!

▼ **DA1, DA2** – Automatic speed-related control, negative control, with electric travel direction valve and electric $V_{g\,max}$ circuit

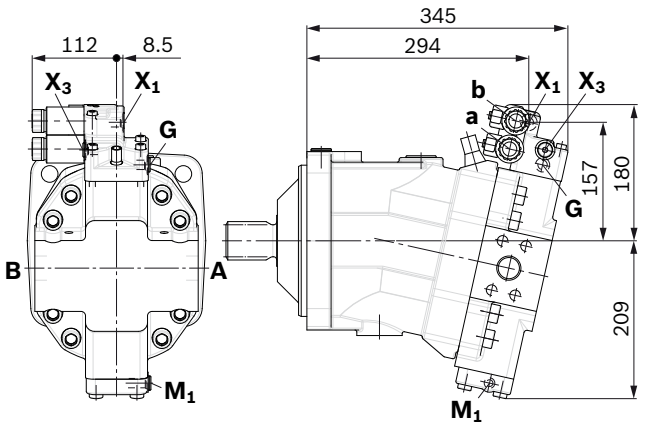

Connector for solenoids

DEUTSCH DT04-2P-EP04

Molded connector, 2-pin, without bidirectional suppressor diode

There is the following type of protection with mounted mating connector:

- IP67 (DIN/EN 60529) and
- IP69K (DIN 40050-9)

▼ **Switching symbol**

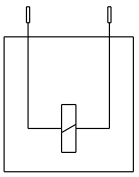

▼ **Mating connector DEUTSCH DT06-2S-EP04**

Consisting of	DT designation
1 housing	DT06-2S-EP04
1 wedge	W2S
2 sockets	0462-201-16141

The mating connector is not included in the scope of delivery. This can be supplied by Bosch Rexroth on request (material number R902601804).

Notice

- If necessary, you can change the position of the connector by turning the solenoid.
- The procedure is defined in the instruction manual.

Neutral position switch

The neutral position switch NLS electronically detects the neutral position of the A6VM, thereby ensuring the torque freedom of the motor. The use of the NLS in a transmission control provides a faster switching cycle in the drive. In addition, the switch reliability is improved and thereby the service life of the drive is increased. Type code, technical data, dimensions and parameters for the connector, plus safety instructions about the sensor can be found in the relevant data sheet 95152 – NLS.

Technical data

Type		NLS
Recommended operating voltage		5 V
Maximum voltage	not actuated	32 V
	actuated	11.5 V
Minimum permissible current		0 mA
Maximum permissible current		10 mA
Maximum switching cycle number		1 million
Contact type		normally open contact (open in unactuated state)
Type of protection (with mating connector plugged)		IP67/IP69K
Temperature range of sensor (medium and ambient temperature)[1]		-40 °C ... 125 °C
Temperature range of thread seal ring FKM[1]		-15 °C ... 125 °C
Pressure resistance	nominal	3 bar
	maximum (momentary peaks)	10 bar[2]

Notice
The minimum swivel angle is dependent on the $V_{g\,min}$-stop

▼ **Mating Connector**

Consisting of	Material number
1 housing	282080
1 socket contact	282403-1

The mating connector is not included in the scope of delivery. This mating connector can be ordered from AMP.

▼ **Dimensions**

Version “N” with neutral position switch mounted

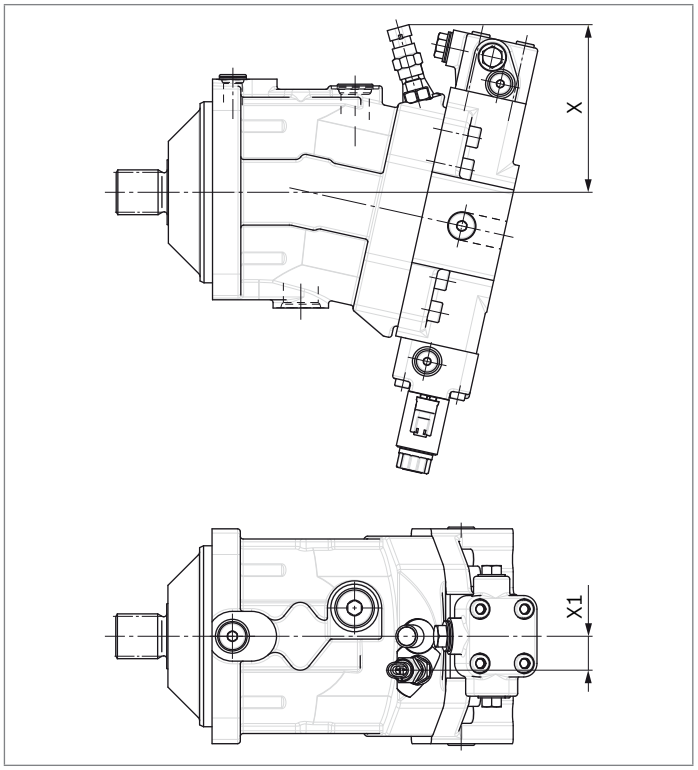

Size	Adjustable angle		X [mm]		X1 [mm]
	min.	max.	at min angle	at max angle	
80	0°	2°	144.7	141.4	28.0
107	0°	4°	148.1	140.4	30.0
140	0°	1°	153.1	150.9	30.0
160	0°	0°		153.1	30.0
200	0°	0°		159.1	30.0

1) Observe the permissible temperature range of the axial piston motor.
2) Observe the permissible viscosity range of the axial piston motor. At oil viscosities >1800 mm²/s, the switch may be unintentionally actuated by case pressure peaks of > 10 bar.

Flushing and boost pressure valve

The flushing and boost pressure valve is used to remove heat from the hydraulic circuit.
In a closed circuit, it is used for flushing the case and safeguarding the minimum boost pressure.
Hydraulic fluid is directed from the respective low pressure side into the motor housing. This is then fed into the reservoir, together with the leakage. The hydraulic fluid, removed out of the closed circuit must be replaced by cooled hydraulic fluid from the boost pump.
The valve is mounted onto the port plate or integrated (depending on the control type and size).

Cracking pressure of pressure retaining valve
(observe when adjusting the primary valve)

- Sizes 55 to 200, fixed setting 16 bar

Switching pressure of flushing spool Δp

- Sizes 55 to 107 (small flushing valve) 8±1 bar
- Sizes 107 to 200 (medium and large flushing valve) 17.5±1.5 bar

Flushing flow q_v
Orifices can be used to adjust the flushing flows as required. The following information is based on:
$\Delta p_{ND} = p_{ND} - p_G$ = 25 bar and ν = 10 mm²/s
(p_{ND} = low pressure, p_G = case pressure)

Small flushing valve for sizes 55 to 107

Material number of orifice	ø [mm]	q_v [l/min]	Code
R909651766	1.2	3.5	A
R909419695	1.4	5	B
R909419696	1.8	8	C
R909419697	2.0	10	D
R909444361	2.4	14	F

Medium flushing valve for size 107

Material number of orifice	ø [mm]	q_v [l/min]	Code
R909431310	2.8	18	I
R909435172	3.5	27	K
R909449967	5.0	31	L

Large flushing valve for sizes 140 to 200

Material number of orifice	ø [mm]	q_v [l/min]	Code
R909449998	1.8	8	C
R909431308	2.0	10	D
R909431309	2.5	15	G
R909431310	2.8	18	I
R902138235	3.1	21	J
R909435172	3.5	27	K
R909436622	4.0	31	L
R909449967	5.0	37	M

▼ **Schematic EP**

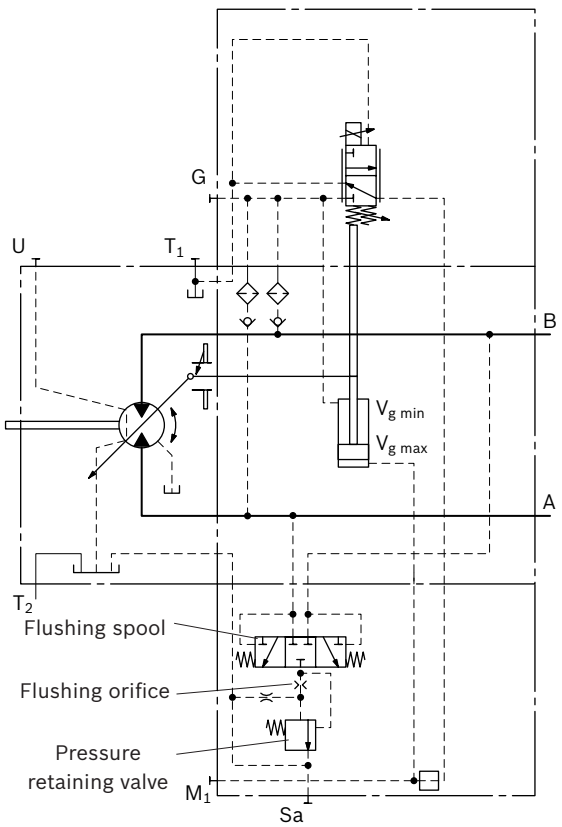

Notice

- Port **S**a only for sizes 140 to 200
- For a flushing flow of 35 l/min, it is recommended that port **S**a be connected in order to prevent an increase in case pressure. An increased case pressure reduces the flushing flow.

▼ **Dimensions of sizes 55 to 107 (small flushing valve)**

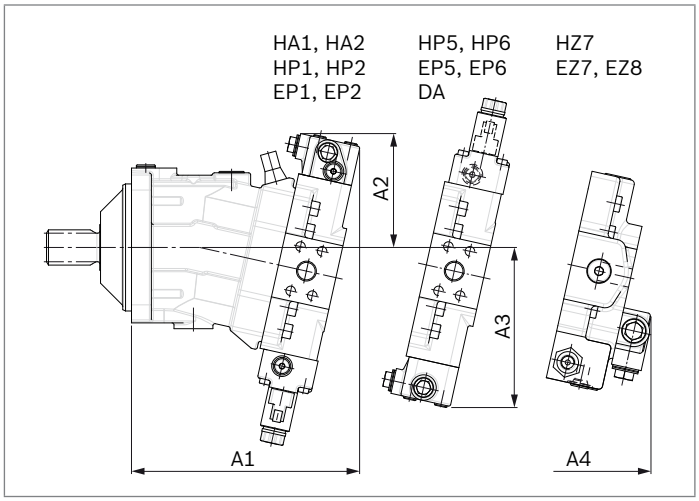

NG	A1	A2	A3	A4
55	245	137	183	236
80	273	142	194	254
107	287	143	202	269

▼ **Dimensions for sizes 140 to 200 (large flushing valve)**

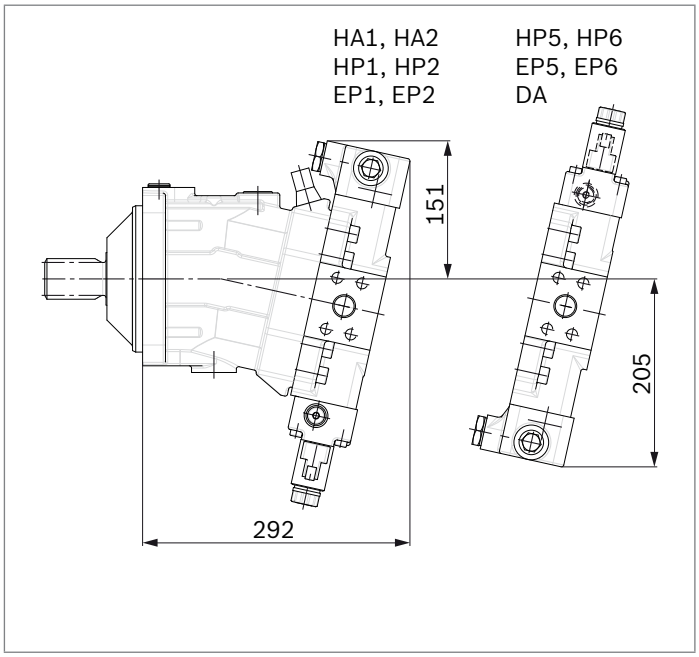

▼ **Dimensions of size 107 (medium flushing valve)**

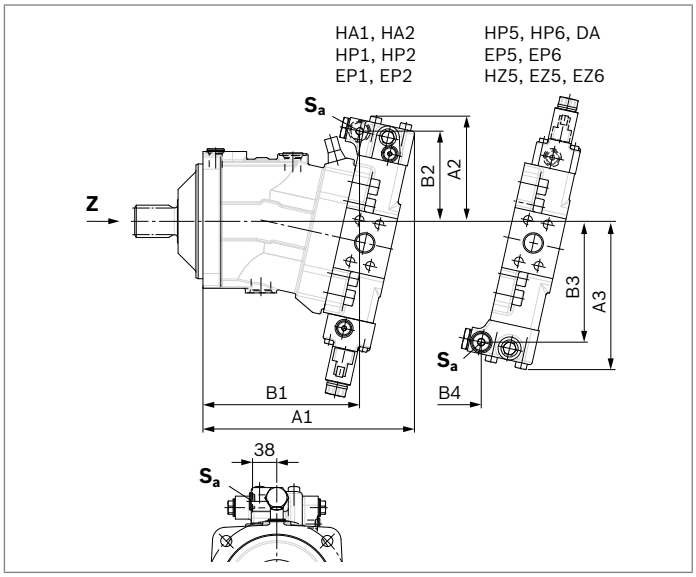

NG	A1	B1	A2	B2	A3	B3	B4	Sa[1)]
140	325	239	165	142	230	187	166	M22 × 1.5; 15.5 deep
160	332	246	165	142	233	190	172	M22 × 1.5; 15.5 deep
200	349	263	172	148	244	201	185	M22 × 1.5; 15.5 tief

1) ISO 6149, ports plugged (in normal operation)
For notes on tightening torques, see instruction manual.
The spot face may be deeper than that specified in the standard.

Counterbalance valve BVD and BVE

Function

Counterbalance valves for travel drives and winches operations are designed to reduce the danger of overspeeding and cavitation of axial piston motors in open circuits.
Cavitation occurs if, during braking, when driving downhill or during the load-lowering process, the motor speed is greater than it should be for the given inlet flow and thus the supply pressure collapses.
If the supply pressure falls below the level specified for the relevant counterbalance valve, the counterbalance valve piston moves into the closed position. The cross-sectional area of the counterbalance valve return duct is then reduced, creating a bottleneck in the return flow of the hydraulic fluid. The pressure increases and brakes the motor until the rotational speed of the motor is again as it should be for the given inlet flow.

Notice

- BBVD available for sizes 55 to 200 and BVE available for sizes 107 to 200.
- The counterbalance valve must be ordered additionally. We recommend ordering the counterbalance valve and the motor as a set.
  Ordering example: A6VM080HA1T30004A/65MWV0N4S 97W0-0 + BVD20F27S/41B–V03K16D0400S12
- For safety reasons, controls with beginning of control at $V_{g\ min}$ (e.g. HA) are not permissible for winch drives!
- Counterbalance valves must be optimized during prototype commissioning to prevent unacceptable operating conditions and compliance with the specification must be verified.
- The counterbalance valve does not replace the mechanical service brake and holding brake.
- Observe the detailed notes on the counterbalance valve in data sheet 95522 – BVD and in data sheet 95525 – BVE!
- For the design of the brake release valve, we require the following data for the mechanical holding brake:
  - the cracking pressure
  - the volume of the counterbalance spool between minimum travel (brake closed) and maximum stroke (brake released with 21 bar)
  - the required closing time for a warm device (oil viscosity approx. 15 mm²/s)

Permissible inlet flow or pressure when using DBV and BVD/BVE

Motor	Without valve		Limited values when using DBV and BVD/BVE							
			DBV[1]				BVD[2]/BVE[3]			
NG	p_{nom}/p_{max} [bar]	$q_{V\ max}$ [l/min]	NG	p_{nom}/p_{max} [bar]	q_V [l/min]	Code	NG	p_{nom}/p_{max} [bar]	q_V [l/min]	Code
55	400/450	244	22	350/420	240	7	20 (BVD)	350/420	220	7W
80		312								
107		380	32		400					
107		380				8	25 (BVD/BVE)		320	8W
140		455								
160		496								
200		580	On request							

Mounting of the counterbalance valve

When delivered, the counterbalance valve is fastened to the motor with two tacking screws (transport lock). The tacking screws may not be removed while mounting the working lines! If the counterbalance valve and motor are delivered separately, the counterbalance valve must first be fastened to the motor port plate using the provided tacking screws.

The counterbalance valve is finally mounted to the motor by fitting the SAE flange.
The screws to be used and the instructions for mounting can be found in the instruction manual.

1) Pressure-relief valve
2) Counterbalance valve, double-acting
3) Counterbalance valve, one-sided

Counterbalance valve for travel drive BVD...F

Application option

- Travel drive for wheeled excavators (BVD and BVE)

▼ **Example circuit diagram for travel drive on wheeled excavators**

A6VM080HA1T30004A/65MWV0N4S97W0-0 + BVD20F27S/41B–V03K16D0400S12

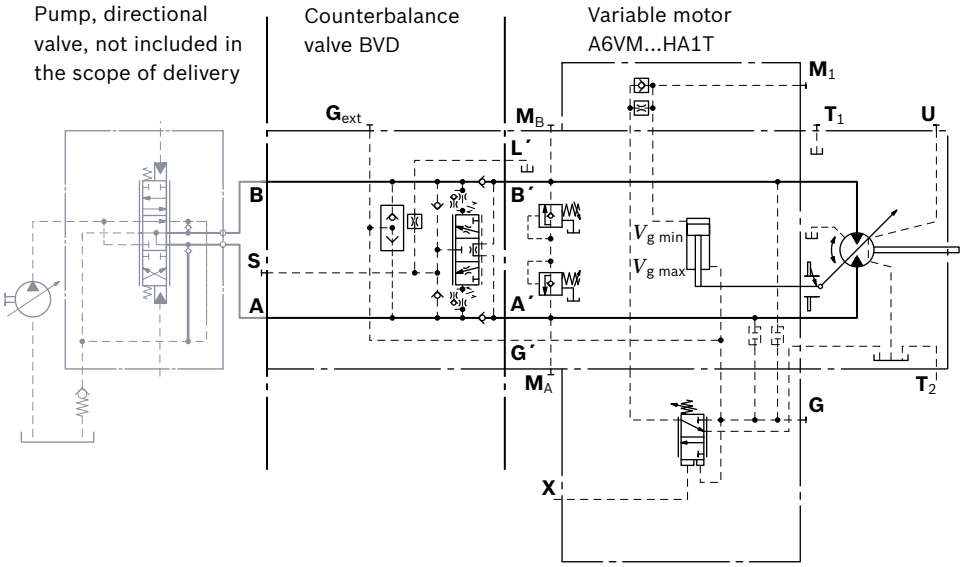

Counterbalance valve for winches and track drives BVD...W and BVE

Application option

- Winch drives in cranes (BVD and BVE)
- Track drive in excavator crawlers (BVD)

▼ **Example circuit diagram for winch drive in cranes**

A6VM080HP5D10001A/65MWV0N4S97W0-0 + BVE25W38S/51ND-V100K00D4599T30S00-0

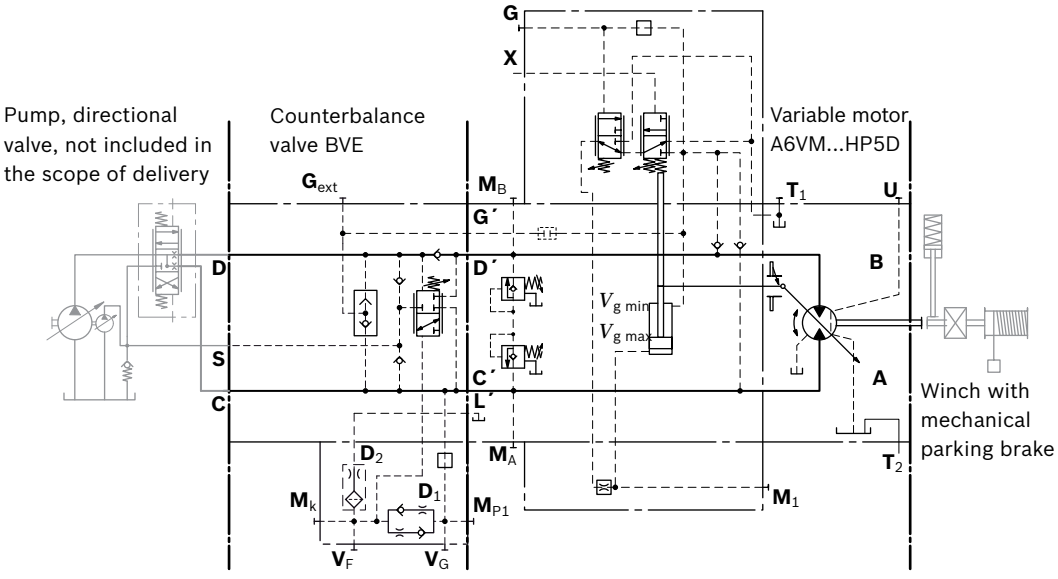

Dimensions

▼ **A6VM...HA, HP1, HP2 and EP1, EP2**

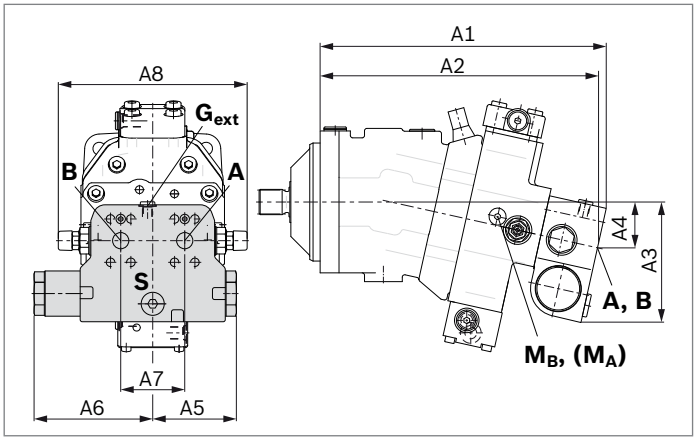

▼ **A6VM...HP5, HP6 and EP5, EP6**[1)]

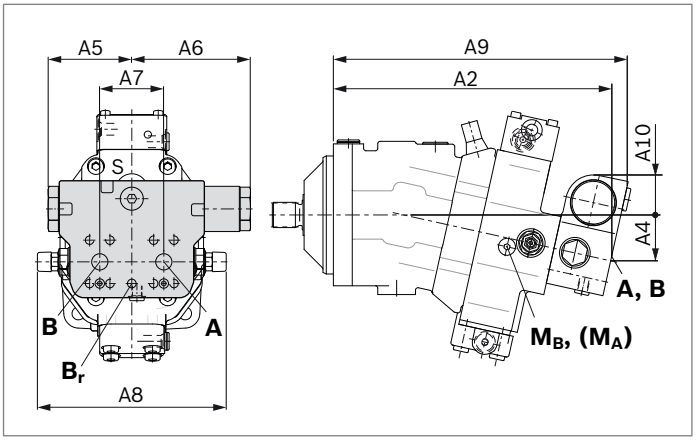

A6VM	Counterbalance valve											
NG...plate	Type	Ports	Dimensions									
		A, B	A1	A2	A3	A4	A5	A6	A7	A8	A9	A10
55...7	BVD20...17	3/4 in	311	302	143	50	98	139	75	222	326	50
80...7	BVD20...27	1 in	340	331	148	55	98	139	75	222	355	46
107...7	BVD20...28	1 in	362	353	152	59	98	139	84	234	377	41
107...8	BVD25...38	1 1/4 in	380	370	165	63	120.5	175	84	238	395	56
140...8	BVD25...38	1 1/4 in	411	401	168	67	120.5	175	84	238	426	53
160...8	BVD25...38	1 1/4 in	417	407	170	68	120.5	175	84	238	432	51
200...8	BVD25...38	1 1/4 in	448	438	176	74	120.5	175	84	299	463	46
107...8	BVE25...38	1 1/4 in	380	370	171	63	137	214	84	238	397	63
140...8	BVE25...38	1 1/4 in	411	401	175	67	137	214	84	238	423	59
160...8	BVE25...38	1 1/4 in	417	407	176	68	137	214	84	238	432	59
200...8	BVE25...38	1 1/4 in	448	438	182	74	137	214	84	299	463	52

Ports		Version	A6VM plate	Standard	Size[2)]	P_{max} [bar][3)]	Status[5)]
A, B	Working port			SAE J518	see table above	420	O
S	Infeed	BVD20		DIN 3852[4)]	M22 × 1.5; 14 deep	30	X
		BVD25, BVE25		DIN 3852[4)]	M27 × 2; 16 deep	30	X
B_r	Brake release, reduced high pressure	L	7	DIN 3852[4)]	M12 × 1.5; 12.5 deep	30	O
			8	DIN 3852[4)]	M12 × 1.5; 12 deep	30	O
G_{ext}	Brake release, high pressure	S		DIN 3852[4)]	M12 × 1.5; 12.5 deep	420	X
M_A, M_B	Pressure measurement **A** and **B**			ISO 6149[4)]	M18 × 1.5; 14.5 deep	420	X

1) At the mounting version for the controls HP5, HP6 and EP5, EP6, the cast-in port designations **A** and **B** on the BVD counterbalance valve do not correspond with the port designation of the A6VM motor..
The designation of the ports on the installation drawing of the motor is binding!

2) For notes on tightening torques, see instruction manual

3) Depending on the application, momentary pressure peaks can occur. Keep this in mind when selecting measuring devices and fittings.

4) The countersink can be deeper than as specified in the standard.

5) O = Must be connected (plugged on delivery)
X = Plugged (in normal operation)

Speed sensor

Version A6VM...U ("prepared for speed sensor", i.e. without sensor) is equipped with a spline on the rotary group.
A signal proportional to motor speed can be generated with the fitted DSA/DSM speed sensor. The DSA/DSM sensor registers the speed and direction of rotation.
Ordering code, technical data, dimensions and details on the connector, plus safety instructions about the sensor can be found in the relevant data sheet (95132 – DSM, 95133 – DSA).
The sensor is mounted on the port provided for this purpose with a mounting bolt. On deliveries without sensor, the port is plugged with a pressure-resistant cover.
We recommend ordering the A6VM variable motor complete with mounted sensor.

▼ **Circuit diagram EP**

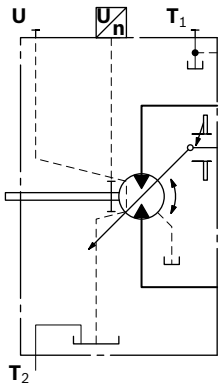

▼ **Dimensions**

"V" design with mounted speed sensor

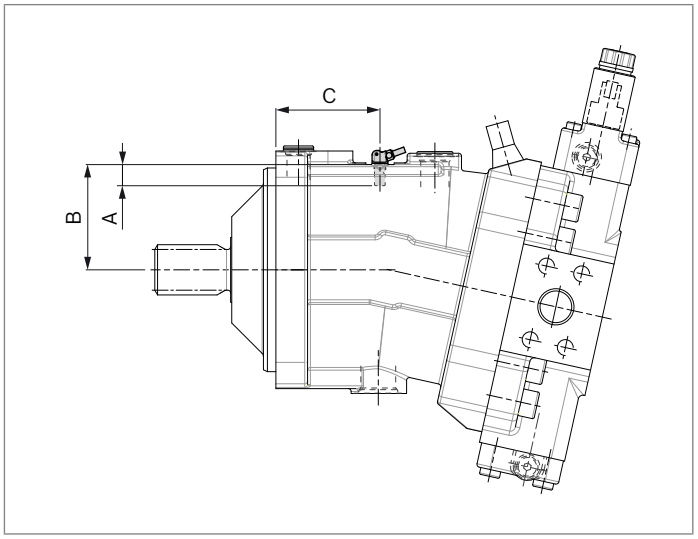

Size		55	80	107	140	160	200
Number of teeth		54	58	67	72	75	80
A	Insertion depth (tolerance -0.25)	18.4	18.4	18.4	18.4	18.4	18.4
B	Contact surface	75	79	88	93	96	101
C		66.2	75.2	77.2	91.2	91.7	95.2

Setting range for displacement

	55				80				107			
	$V_{g\,max}$ (cm³/rev)		$V_{g\,min}$ (cm³/rev)		$V_{g\,max}$ (cm³/rev)		$V_{g\,min}$ (cm³/rev)		$V_{g\,max}$ (cm³/rev)		$V_{g\,min}$ (cm³/rev)	
	from	to	from	to	from	to	from	to	from	to	from	to
A	54.8	54.8	0.0	13.3	80.0	80.0	0.0	9.0	107.0	107.0	0.0	22.2
	without screw		M10 × 60 R909154690		ohne Schraube		M12 × 60 R909083530		without screw		M12 × 70 R909085976	
B	54.8	54.8	> 13.3	27	80.0	80.0	> 9.0	26.0	107.0	107.0	> 22.2	43.8
	without screw		M10 × 70 R909153779		ohne Schraube		M12 × 70 R909085976		without screw		M12 × 80 R909153075	
C	54.8	54.8	> 27.0	38.0	80.0	80.0	> 26.0	44.0	107.0	107.0	> 43.8	65.5
	without screw		M10 × 80 R909154058		ohne Schraube		M12 × 80 R909153075		without screw		M12 × 90 R909154041	
D	x		x		80.0	80.0	> 44.0	56.0	107.0	107.0	> 65.5	75.0
					ohne Schraube		M12 × 90 R909154041		without screw		M12 × 100 R909153975	
E	< 54.8	42.0	0.0	13.3	< 80.0	72.0	0.0	9.0	< 107.0	86.0	0.0	22.2
	M10 × 60 R909154690		M10 × 60 R909154690		M12 × 60 R909083530		M12 × 60 R909083530		M12 × 70 R909085976		M12 × 70 R909085976	
F	< 54.8	42.0	> 13.3	27.0	< 80.0	72.0	> 9.0	26.0	< 107.0	86.0	> 22.2	43.8
	M10 × 60 R909154690		M10 × 70 R909153779		M12 × 60 R909083530		M12 × 70 R909085976		M12 × 70 R909085976		M12 × 80 R909153075	
G	< 54.8	42.0	> 27.0	38.0	< 80.0	72.0	> 26.0	44.0	< 107.0	86.0	> 43.8	65.5
	M10 × 60 R909154690		M10 × 80 R909154058		M12 × 60 R909083530		M12 × 80 R909153075		M12 × 70 R909085976		M12 × 90 R909154041	
H	x		x		< 80.0	72.0	> 44.0	56.0	< 107.0	86.0	> 65.5	75.0
					M12 × 60 R909083530		M12 × 90 R909154041		M12 × 70 R909085976		M12 × 100 R909153975	
J	< 42.0	29.0	0.0	13.3	< 72.0	55.0	0.0	9.0	< 86.0	64.0	0.0	22.2
	M10 × 70 R909153779		M10 × 60 R909154690		M12 × 70 R909085976		M12 × 60 R909083530		M12 × 80 R909153075		M12 × 70 R909085976	
K	< 42.0	29.0	> 13.3	27.0	< 72.0	55.0	> 9.0	26.0	< 86.0	64.0	> 22.2	43.8
	M10 × 70 R909153779		M10 × 70 R909153779		M12 × 70 R909085976		M12 × 70 R909085976		M12 × 80 R909153075		M12 × 80 R909153075	
L	< 42.0	29.0	> 27.0	38.0	< 72.0	55.0	> 26.0	44.0	< 86.0	64.0	> 43.8	65.5
	M10 × 70 R909153779		M10 × 80 R909154058		M12 × 70 R909085976		M12 × 80 R909153075		M12 × 80 R909153075		M12 × 90 R909154041	
M	x		x		< 72.0	55.0	> 44.0	56.0	< 86.0	64.0	> 65.5	75.0
					M12 × 70 R909085976		M12 × 90 R909154041		M12 × 80 R909153075		M12 × 100 R909153975	

Specify exact settings for $V_{g\,min}$ and $V_{g\,max}$ in plain text when ordering:

- $V_{g\,min}$ = ... cm³, $V_{g\,max}$ = ... cm³

Theoretical, maximum setting:

- for $V_{g\,min}$ = 0.7 × $V_{g\,max}$
- for $V_{g\,max}$ = 0.3 × $V_{g\,max}$

Settings that are not listed in the table may lead to damage.
Please contact us.

	140				160				200			
	$V_{g\,max}$ (cm³/rev)		$V_{g\,min}$ (cm³/rev)		$V_{g\,max}$ (cm³/rev)		$V_{g\,min}$ (cm³/rev)		$V_{g\,max}$ (cm³/rev)		$V_{g\,min}$ (cm³/rev)	
	from	to	from	to	from	to	from	to	from	to	from	to
A	140.0	140.0	0.0	38.0	160.0	160.0	0.0	32.6	200.0	200.0	0.0	39.0
	without screw		M12 × 80 R909153075		without screw		M12 × 80 R909153075		without screw		M12 × 80 R909153075	
B	140.0	140.0	> 38.0	63.5	160.0	160.0	> 32.6	59.2	200.0	200.0	> 39.0	72.0
	without screw		M12 × 90 R909154041		without screw		M12 × 90 R909154041		without screw		M12 × 90 R909154041	
C	140.0	140.0	> 63.5	89.0	160.0	160.0	> 59.2	89.0	200.0	200.0	> 72.0	105.0
	without screw		M12 × 100 R909153975		without screw		M12 × 100 R909153975		without screw		M12 × 100 R909153975	
D	140.0	140.0	> 89.0	98.0	160.0	160.0	> 89.0	112.0	200.0	200.0	> 105.0	140.0
	without screw		M12 × 110 R909154212		without screw		M12 × 110 R909154212		without screw		M12 × 110 R909154212	
E	< 140.0	105.0	0.0	38.0	< 160.0	129.0	0.0	32.6	< 200.0	164.0	0.0	39.0
	M12 × 80 R909153075		M12 × 80 R909153075		M12 × 80 R909153075		M12 × 80 R909153075		M12 × 80 R909153075		M12 × 80 R909153075	
F	< 140.0	105.0	> 38.0	63.5	< 160.0	129.0	> 32.6	59.2	< 200.0	164.0	> 39.0	72.0
	M12 × 80 R909153075		M12 × 90 R909154041		M12 × 80 R909153075		M12 × 90 R909154041		M12 × 80 R909153075		M12 × 90 R909154041	
G	< 140.0	105.0	> 63.5	89.0	< 160.0	129.0	> 59.2	89.0	< 200.0	164.0	> 72.0	105.0
	M12 × 80 R909153075		M12 × 100 R909153975		M12 × 80 R909153075		M12 × 100 R909153975		M12 × 80 R909153075		M12 × 100 R909153975	
H	< 140.0	105.0	> 89.0	98.0	< 160.0	129.0	> 89.0	112.0	< 200.0	164.0	> 105.0	140.0
	M12 × 80 R909153075		M12 × 110 R909154212		M12 × 80 R909153075		M12 × 110 R909154212		M12 × 80 R909153075		M12 × 110 R909154212	
J	< 105.0	80.0	0.0	38.0	< 129.0	100.0	0.0	32.6	< 164.0	130.5	0.0	39.0
	M12 × 90 R909154041		M12 × 80 R909153075		M12 × 90 R909154041		M12 × 80 R909153075		M12 × 90 R909154041		M12 × 80 R909153075	
K	< 105.0	80.0	> 38.0	63.5	< 129.0	100.0	> 32.6	59.2	< 164.0	130.5	> 39.0	72.0
	M12 × 90 R909154041		M12 × 90 R909154041		M12 × 90 R909154041		M12 × 90 R909154041		M12 × 90 R909154041		M12 × 90 R909154041	
L	< 105.0	80.0	> 63.5	89.0	< 129.0	100.0	> 59.2	89.0	< 164.0	130.5	> 72.0	105.0
	M12 × 90 R909154041		M12 × 100 R909153975		M12 × 90 R909154041		M12 × 100 R909153975		M12 × 90 R909154041		M12 × 100 R909153975	
M	< 105.0	80.0	> 89.0	98.0	< 129.0	100.0	> 89.0	112.0	< 164.0	130.5	> 105.0	140.0
	M12 × 90 R909154041		M12 × 110 R909154212		M12 × 90 R909154041		M12 × 110 R909154212		M12 × 90 R909154041		M12 × 110 R909154212	

Specify exact settings for $V_{g\,min}$ and $V_{g\,max}$ in plain text when ordering:

- $V_{g\,min}$ = ... cm³, $V_{g\,max}$ = ... cm³

Theoretical, maximum setting:

- for $V_{g\,min}$ = 0.7 × $V_{g\,max}$
- for $V_{g\,max}$ = 0.3 × $V_{g\,max}$

Settings that are not listed in the table may lead to damage.

Please contact us.

Installation instructions

General

During commissioning and operation, the axial piston unit must be filled with hydraulic fluid and air bled. This must also be observed following a relatively long standstill as the fluid from the axial piston unit may drain back to the reservoir via the hydraulic lines.

Particularly in the installation position “drive shaft upwards” filling and air bleeding must be carried out completely as there is, for example, a danger of dry running.

The leakage in the motor housing must be directed to the reservoir via the highest available drain port (**T_1**, **T_2**).

For combinations of multiple units, make sure that the respective case pressure in each unit is not exceeded. In the event of pressure differences at the drain ports of the units, the shared drain line must be changed so that the maximum permissible case pressure of all connected units is not exceeded at any operational conditions. If this is not possible, separate drain lines must be laid.

To achieve favorable noise values, decouple all connecting lines using elastic elements and avoid above-reservoir installation.

In all operating conditions, the drain line must flow into the reservoir below the minimum fluid level.

Notice

In certain installation positions, an influence on the control characteristic can be expected. Gravity, dead weight and case pressure can cause minor characteristic shifts and changes in response time.

Key	
F	Filling / air bleeding
U	Bearing flushing / air bleed port
T_1, T_2	Drain port
$h_{t\,min}$	Minimum required immersion depth (200 mm)
h_{min}	Minimum required spacing to reservoir bottom (100 mm)

Installation position

See examples **1** to **8** below.

Additional installation positions are available upon request.

Recommended installation position: **1** and **2**

Below-reservoir installation (standard)

Below-reservoir installation means that the axial piston unit is installed outside of the reservoir below the minimum fluid level.

Installation position	Air bleed	Filling
1 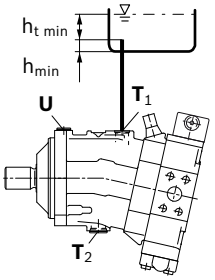		**T_1**
2 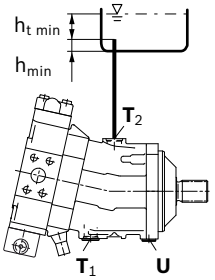		**T_2**
3 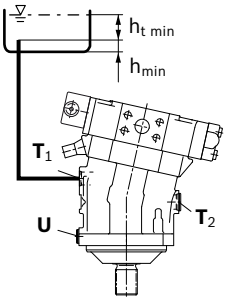		**T_1**
4 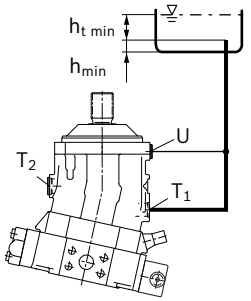	**U**	**T_1**

Above-reservoir installation

Above-reservoir installation means that the axial piston unit is installed above the minimum fluid level of the reservoir.
Recommendation for installation position 8 (drive shaft upward):
A check valve in the drain line (cracking pressure 0.5 bar) can prevent draining of the motor housing.

Installation position	Air bleed	Filling
5 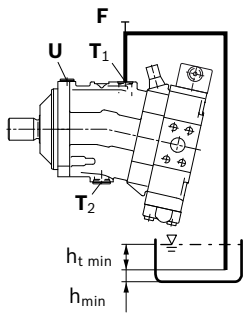	**U** (**F**)	T_1 (**F**)
6 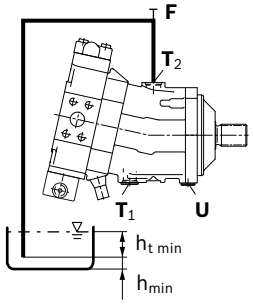	**F**	T_2 (**F**)
7 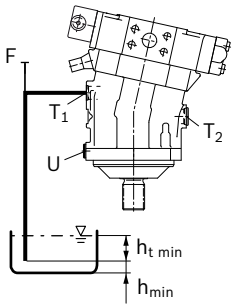	**F**	T_1 (**F**)
8 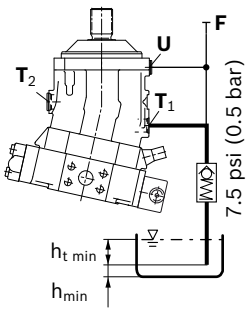	**U**	T_1 (**F**)

Notice

Port **F** is part of the external piping and must be provided on the customer side to make filling and air bleeding easier.

Project planning notes

- The motor A6VE is designed to be used in open and closed circuits.
- The project planning, installation and commissioning of the axial piston unit requires the involvement of qualified skilled personnel.
- Before using the axial piston unit, please read the corresponding instruction manual completely and thoroughly. If necessary, these can be requested from Bosch Rexroth.
- Before finalizing your design, please request a binding installation drawing.
- The specified data and notes contained herein must be observed.
- For safety reasons, controls with beginning of control at $V_{g\,min}$ (e.g. HA) are not permissible for winch drives, e.g. anchor winches.
- Depending on the operating conditions of the axial piston unit (working pressure, fluid temperature), the characteristic curve may shift.
- Preservation: Our axial piston units are supplied as standard with preservative protection for a maximum of 12 months. If longer preservative protection is required (maximum 24 months), please specify this in plain text when placing your order. The preservation periods apply under optimal storage conditions, details of which can be found in the data sheet 90312 or the instruction manual.
- Not all versions of the product are approved for use in a safety function according to ISO 13849. Please consult the responsible contact person at Bosch Rexroth if you require reliability parameters (e.g. $MTTF_d$) for functional safety.
- Depending on the type of control used, electromagnetic effects can be produced when using solenoids. When a direct current is applied, solenoids do not cause electromagnetic interference nor is their operation impaired by electromagnetic interference.
  Other behavior can result when a modulated direct current (e.g. PWM signal) is applied. Potential electromagnetic interference for persons (e.g. persons with a pacemaker) and other components must be tested by the machine manufacturer.
- Please note the details regarding the tightening torques of port threads and other threaded joints in the instruction manual.
- Working ports:
  - The ports and fastening threads are designed for the specified maximum pressure. The machine or system manufacturer must ensure that the connecting elements and lines correspond to the specified application conditions (pressure, flow, hydraulic fluid, temperature) with the necessary safety factors.
  - The working ports and function ports are only intended to accommodate hydraulic lines.

Safety instructions

- During and shortly after operation, there is a risk of getting burnt on the axial piston unit and especially on the solenoids. Take appropriate safety measures (e.g. by wearing protective clothing).
- Moving parts in control equipment (e.g. valve pistons) can, under certain circumstances get stuck in position as a result of contamination (e.g. impure hydraulic fluid, abrasion, or residual dirt from components). As a result, the hydraulic fluid flow and the build-up of torque in the axial piston unit can no longer respond correctly to the operator's specifications. Even the use of various filter elements (external or internal flow filter) will not rule out a fault but merely reduce the risk.
  The machine/system manufacturer must test whether remedial measures are needed on the machine for the application concerned in order to set the consumer being driven to a safe position (e.g. safe stop) and if necessary to ensure it is properly implemented.
- Moving parts in high-pressure relief valves may in certain circumstances become stuck in an undefined position due to contamination (e.g. contaminated hydraulic fluid). This can result in restriction or loss of the load holding function in lifting winches.
  The machine/system manufacturer must check whether additional measures are required on the machine for the relevant application in order to keep the load in a safe position and ensure they are properly implemented.
- When using the axial piston motor in winch drives, make certain that the technical limit values are not exceeded under all operating conditions. If the axial piston motor is extremely overloaded (e.g. if the maximum permissible rotational speeds are exceeded during weighing of the anchor while the ship is in motion), the rotary group may be damaged and, in the worst case, the axial piston motor may burst. The machine manufacturer / system manufacturer is to undertake additional measures, up to and including encapsulation.

Axial piston variable motor
A6VM series 71

- All-purpose high pressure motor
- Sizes 60 to 215
- Nominal pressure 450 bar
- Maximum pressure 500 bar
- Open and closed circuits

Features

- Robust motor with long service life
- Approved for very high rotational speeds
- High starting efficiency
- Excellent slow-running characteristics
- Variety of controls
- High control range (can be swiveled to zero)
- High torque
- Optionally with flushing and boost-pressure valve mounted
- Optionally with mounted high-pressure counterbalance valve
- Bent-axis design

Inhalt

Ordering code	2
Hydraulic fluids	6
Shaft seal	7
Operating pressure range	8
Technical data	9
HP – Proportional hydraulic control	11
EP – Proportional electric control	14
HZ – Two-point hydraulic control	16
EZ – Two-point electric control	17
HA – Automatic high-pressure related control	18
DA – Automatic speed-related control	23
Electric travel direction valve (for DA, HA.R)	25
Dimensions size 60 to 215	26
Connector for solenoids	62
Neutral position switch	63
Flushing and boost pressure valve	64
Counterbalance valve BVD and BVE	66
Speed sensor	69
Setting range for displacement	70
Installation instructions	72
Project planning notes	74
Safety instructions	75

RE 91 010/06.2012, Bosch Rexroth AG

Ordering code

01	02	03	04	05	06	07	08	09	10		11	12	13	14	15	16	17	18	19	20		21
A6V	**M**						**0**			**/**	**71**	**M**	**W**	**V**	**0**						**–**	

Axial piston unit

01	Bent-axis design, variable, nominal pressure 450 bar, maximum pressure 500 bar	**A6V**

Operating mode

02	Motor	**M**

Size (NG)

		060	085	115	150	170	215	
03	Geometric displacement, see technical data on page 9							

Control device				060	085	115	150	170	215	
04	Proportional control hydraulic	positive control	Δp_{St} = 10 bar	●	●	●	●	●	●	**HP1**
			Δp_{St} = 25 bar	●	●	●	●	●	●	**HP2**
		negative control	Δp_{St} = 10 bar	●	●	●	●	●	●	**HP5**
			Δp_{St} = 25 bar	●	●	●	●	●	●	**HP6**
	Proportional control electrical	positive control	U = 12 V DC	●	●	●	●	●	●	**EP1**
			U = 24 V DC	●	●	●	●	●	●	**EP2**
		negative control	U = 12 V DC	●	●	●	●	●	●	**EP5**
			U = 24 V DC	●	●	●	●	●	●	**EP6**
	Two-point control hydraulic	negative control		–	–	–	●	●	●	**HZ5**
				●	●	●	–	–	–	**HZ7**
	Two-point control electrical	negative control	U = 12 V DC	–	–	–	●	●	●	**EZ5**
			U = 24 V DC	–	–	–	●	●	●	**EZ6**
			U = 12 V DC	●	●	●	–	–	–	**EZ7**
			U = 24 V DC	●	●	●	–	–	–	**EZ8**
	Automatic control high-pressure related, positive control	with minimum pressure increase	Δp ≤ approx. 10 bar	●	●	●	●	●	●	**HA1**
		with pressure increase	Δp = 100 bar	●	●	●	●	●	●	**HA2**
	Automatic control speed related, negative control p_{St} / p_{HD} = 5/100	hydr. travel direction valve		●	●	●	●	●	●	**DA0**
		electric travel direction valve + electric $V_{g\,max}$ circuit	U = 12 V DC	●	●	●	●	●	●	**DA1**
			U = 24 V DC	●	●	●	●	●	●	**DA2**

Pressure control/override				060	085	115	150	170	215	
05	Without pressure control/override			●	●	●	●	●	●	**00**
	Pressure control fixed setting, only for HP5, HP6, EP5 and EP6			●	●	●	●	●	●	**D1**
	Override of controls HA1 and HA2	hydraulic remote control, proportional		●	●	●	●	●	●	**T3**
		electric, two-point	U = 12 V DC	●	●	●	●	●	●	**U1**
			U = 24 V DC	●	●	●	●	●	●	**U2**
		electric and travel direction valve, electric	U = 12 V DC	●	●	●	●	●	●	**R1**
			U = 24 V DC	●	●	●	●	●	●	**R2**

Connector for solenoids[1] (see page 62)

06	Without connector (without solenoid, only for hydraulic control)	**0**
	DEUTSCH - molded connector, 2-pin, without suppressor diode	**P**

● = Available ○ = On request – = Not available

1) Connectors for other electric components can deviate.

01	02	03	04	05	06	07	08	09	10		11	12	13	14	15	16	17	18	19	20		21
A6V	M						0			/	71	M	W	V	0						–	

Neutral position switch (see page 63)

		060	085	115	150	170	215	
07	Without additional function	●	●	●	●	●	●	0
	Neutral position switch	–	●	●	●	●	●	N

Additional function

08	Without additional function	0

Response time damping (for selection, see control)

09	Without damping (standard with HP and EP)		0
	Damping	HP, EP, HP5,6D. and EP5,6D., HZ, EZ, HA with counterbalance valve BVD/BVE	1
		One-sided in inlet to large stroking chamber (HA)	4
		One-sided in outlet from large stroking chamber (DA)	7

Setting range for displacement[2)]

			060	085	115	150	170	215	
10	$V_{g\,max}$-setting screw	$V_{g\,min}$-setting screw							
	Without setting screw	short (0-adjustable)	●	●	●	●	●	●	A
		medium	●	●	●	●	●	●	B
		long	●	●	●	●	●	●	C
		extra long	–	–	●	●	●	●	D
	Short	short (0-adjustable)	●	●	●	●	●	●	E
		medium	●	●	●	●	●	●	F
		long	●	●	●	●	●	●	G
		extra long	–	–	●	●	●	●	H
	Medium	short (0-adjustable)	●	●	●	●	●	●	J
		medium	●	●	●	●	●	●	K
		long	●	●	●	●	●	●	L
		extra long	–	–	●	●	●	●	M

Series

11	Series 7, index 1	71

Configuration of ports and fastening threads

12	Metric, port threads with O-ring sealing according to ISO 6149	M

Direction of rotation

13	Viewed on drive shaft, bidirectional	W

Sealing material

14	FKM (fluoroelastomer)	V

Drive shaft bearing

15	Standard bearing	0

Mounting flange

			060	085	115	150	170	215	
16	ISO 3019-2	125-4	●	–	–	–	–	–	M4
		140-4	–	●	–	–	–	–	N4
		160-4	–	–	●	–	–	–	P4
		180-4	–	–	–	●	●	–	R4
		200-4	–	–	–	–	–	●	S4

● = Available ○ = On request – = Not available

2) The settings for the setting screws can be found in the table (see pages 70 and 71).

01	02	03	04	05	06	07	08	09	10		11	12	13	14	15	16	17	18	19	20		21
A6V	**M**						**0**			**/**	**71**	**M**	**W**	**V**	**0**						**–**	

Drive shaft

			060	085	115	150	170	215	
17	Splined shaft ANSI B92.1a	1 1/4 in 14T 12/24 DP	●	–	–	–	–	–	**S7**
		1 124 in 17T 12/24 DP	–	●	–	–	–	–	**S9**
		1 3/4 in 13T 8/16 DP	–	–	●	●	–	–	**T1**
		2 in 15T 8/16 DP	–	–	–	○	●	●	**T2**
	Splined shaft DIN 5480	W35×2×16×9g	●	–	–	–	–	–	**Z8**
		W40×2×18×9g	–	●	●	–	–	–	**Z9**
		W45×2×21×9g	–	–	–	●	●	–	**A1**
		W50×2×24×9g	–	–	–	–	–	●	**A2**

Working Port

			060	085	115	150	170	215	
18	SAE working port **A** and **B** at rear		●	●	●	●	●	●	**1**
	SAE working port **A** and **B** at side, opposite		●	●	●	●	●	●	**2**
	Port plate with 1-stage pressure limitation valves for mounting a counterbalance valve[3]	BVD20	●	●	●	–	–	–	**7**
		BVD25, BVE25	–	–	●	●	●	●	**8**

Valve (see pages 64 to 68)

			060	085	115	150	170	215	
19	Without valve		●	●	●	●	●	●	**0**
	With counterbalance valve BVD/BVE mounted[4]		●	●	●	●	●	●	**W**
	With flushing and boost pressure valve, mounted Flushing on both sides Flushing flow at: $\Delta p = p_{ND} - p_G$ = 25 bar and v = 10 mm²/s (p_{ND} = low pressure, p_G = case pressure) Only possible with port plates 1 and 2	**Flushing flow q_v [l/min]**							
		3.5	●	●	●	–	–	–	**A**
		5	●	●	●	–	–	–	**B**
		8	●	●	●	●	●	●	**C**
		10	●	●	●	●	●	●	**D**
		14	●	●	●	–	–	–	**F**
		17	–	–	–	●	●	●	**G**
		20	–	–	●[5]	●	●	●	**H**
		25	–	–	●[5]	●	●	●	**J**
		30	–	–	●[5]	●	●	●	**K**
		35	–	–	–	●	●	●	**L**
		40	–	–	–	●	●	●	**M**

● = Available ○ = On request – = Not available

3) Only possible in conjunction with HP, EP and HA control. Note the restrictions described on page 66.
4) State ordering code for counterbalance valve separately in accordance with data sheet 95522 – BVD or 95525 – BVE. Note the restrictions described on page 66.
5) Not for EZ7, EZ8 and HZ7.

01	02	03	04	05	06	07	08	09	10		11	12	13	14	15	16	17	18	19	20		21
A6V	**M**						**0**			**/**	**71**	**M**	**W**	**V**	**0**						**–**	

Speed sensor (see page 69)

		060	085	115	150	170	215	
20	Without speed sensor	●	●	●	●	●	●	**0**
	Prepared with speed sensor DSM/DSA	●	●	●	●	●	●	**U**
	With speed sensor DSM/DSA mounted[6)]	●	●	●	●	●	●	**V**

Standard / special version

21	Standard version	**0**
	Standard version with installation variants, e.g. **T** ports against standard open and closed	**Y**
	Special version	**S**

● = Available ○ = On request – = Not available

Notice

▶ Note the project planning notes on page 74.

6) State ordering code for sensor separately in accordance with data sheet 95132 – DSM or 95133 – DSA and note the requirements relating to the electronics.

Hydraulic fluids

The variable motor A6VM is designed for operation with mineral oil HLP according to DIN 51524.
Application instructions and requirements for hydraulic fluids should be taken from the following data sheets before the start of project planning:

- 90220: Hydraulic fluids based on mineral oils and related hydrocarbons
- 90221: Environmentally friendly hydraulic fluids
- 90222: Fire-resistant, water-free hydraulic fluids (HFDR/HFDU)
- 90225: Axial piston units for operation with water-free and water-containing fire-resistant hydraulic fluids (HFDR, HFDU, HFB, HFC).

The variable motor A6VM is not suitable for operation with HFA fluids. If operating with HFB-, HFC- and HFD or environmentally acceptable hydraulic fluids, the limitations regarding technical data or other seals must be observed.

Notes on selection of hydraulic fluid
The hydraulic fluid should be selected such that the operating viscosity in the operating temperature range is within the optimum range (v_{opt} see selection diagram).

Notice
At no point of the component may the temperature be higher than 115 °C. The temperature difference specified in the table is to be taken into account when determining the viscosity in the bearing.
If the above conditions cannot be maintained due to extreme operating parameters, we recommend the use of a flushing and boost-pressure valve (see page 64).

Viscosity and temperature of hydraulic fluids

	Viscosity	Temperature	Comment
Cold start	v_{max} ≤ 1600 mm²/s	θ_{St} ≥ -40 °C	t ≤ 3 min, n ≤ 1000 rpm, without load p ≤ 50 bar
Permissible temperature difference		ΔT ≤ 25 K	between axial piston unit and hydraulic fluid in the system
Warm-up phase	v = 1600 bis 400 mm²/s	θ = -40 °C bis -25 °C	at p ≤ 0.7 × p_{nom}, n ≤ 0.5 × n_{nom} and t ≤ 15 min
Continuous operation	v = 400 bis 10 mm²/s		This corresponds, for example on the VG 46, to a temperature range of +5 °C to +85 °C (see selection diagram)
		θ = -25 °C bis +103 °C	measured at port **T** Note the permissible temperature range of the shaft seal (ΔT = approx. 12 K between the bearing/shaft seal and port **T**)
	v_{opt} = 36 to 16 mm²/s		Range of optimum operating viscosity and efficiency
Short-term operation	v_{min} ≥ 7 mm²/s		t < 3 min, p < 0.3 × p_{nom}

▼ **Selection diagram**

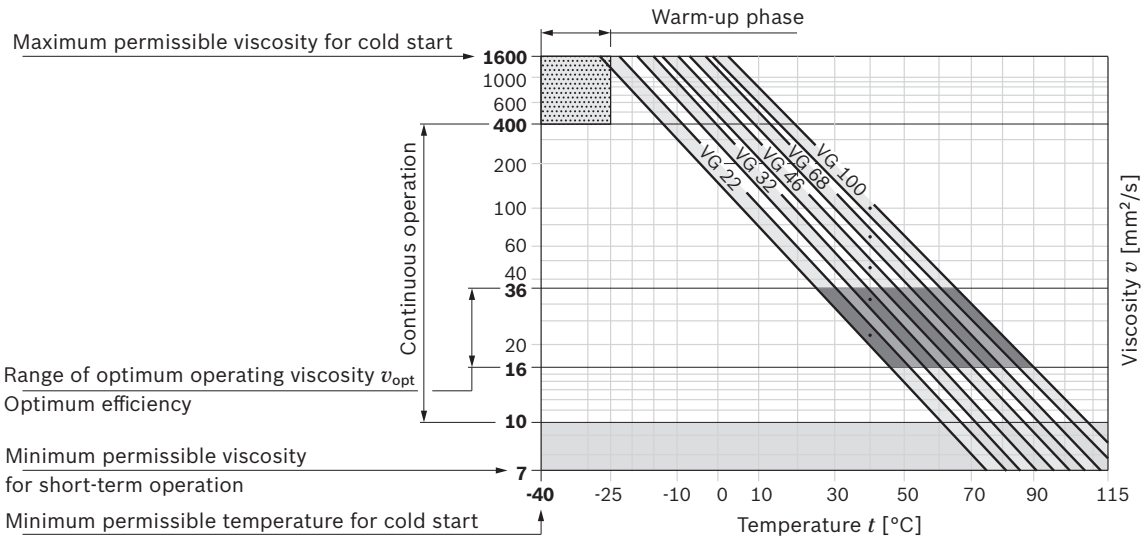

Filtration of the hydraulic fluid

Finer filtration improves the cleanliness level of the hydraulic fluid, which increases the service life of the axial piston unit.

A cleanliness level of at least 20/18/15 is to be maintained according to ISO 4406.

At very high hydraulic fluid temperatures (90 °C to maximum 103 °C, measured at port **T**), a cleanliness level of at least 19/17/14 according to ISO 4406 is necessary.

Influence of case pressure on beginning of control

An increase in case pressure affects the beginning of control of the variable motor when using the following control options:

- HP, HA.T3: increase
- DA: decrease

With the following settings, an increase in case pressure will have no effect on the beginning of control:

HA.R and HA.U, EP, HA

The factory setting of the beginning of control is made at p_{abs} = 2 bar case pressure.

Flow direction

Direction of rotation, viewed on drive shaft	
cw	ccw
A to **B**	**B** to **A**

Shaft seal

Permissible pressure loading

The service life of the shaft seal will be influenced by the speed of the axial piston unit and the leakage pressure in the housing (case pressure). Momentary pressure spikes (t < 0.1 s) of up to 10 bar are permitted. Case pressures of a continuous 2 bar maximum are permitted to be able to utilize the entire speed range. Higher case pressures are permissible at lower rotational speeds (see diagram). The service life of the shaft seal decreases with increasing frequency of pressure spikes and increasing mean differential pressure.

The case pressure must be equal to or higher than the ambient pressure.

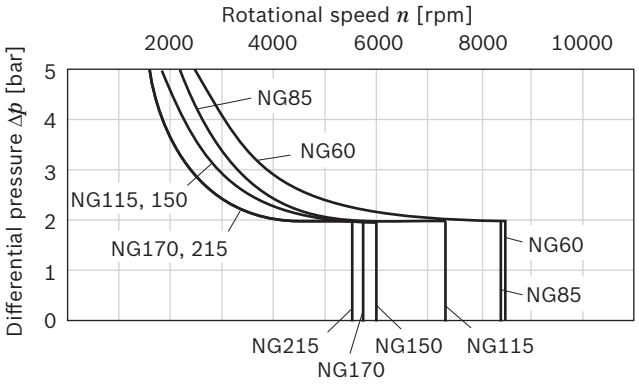

The FKM shaft seal may be used for leakage temperatures from -25 °C to +115 °C. For application cases below -25 °C, an NBR shaft seal is required (permissible temperature range: -40 °C to +90 °C).

RE 91010/06.2016, Bosch Rexroth AG

371

Operating pressure range

Pressure at service line port A or B		Definition
Nominal pressure p_{nom}	450 bar	The nominal pressure corresponds to the maximum design pressure.
Maximum pressure p_{max}	500 bar	The maximum pressure corresponds to the maximum operating pressure within the single operating period. The sum of the single operating periods must not exceed the total operating period.
Single operating period	10 s	
Total operating period	300 h	
Minimum pressure (high-pressure side)	25 bar absolute	Minimum pressure at the high-pressure side (**A** or **B**) which is required in order to prevent damage to the axial piston unit.
Minimum pressure – pump operating mode (inlet)	See the diagram below	To prevent damage to the axial piston motor in pump operating mode (change of high-pressure side with unchanged direction of rotation, e.g. when braking), a minimum pressure must be guaranteed at the service line port (inlet). This minimum pressure is dependent on the speed and displacement of the axial piston unit (see characteristic curve)
Summation pressure p_{Su} (pressure **A** + pressure **B**)	700 bar	The summation pressure is the sum of the pressures at both service line ports (**A** and **B**)
Rate of pressure change $R_{A\,max}$		Maximum permissible rate of pressure rise and reduction during a pressure change over the entire pressure range.
With integrated pressure-relief valve	9000 bar/s	
Without pressure-relief valve	16000 bar/s	

▼ **Rate of pressure change $R_{A\,max}$**

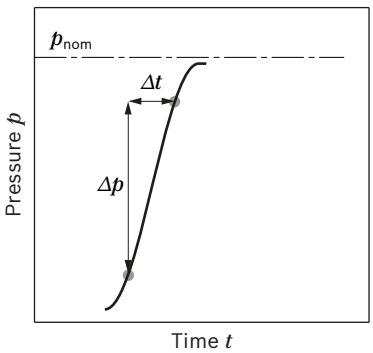

▼ **Pressure definition**

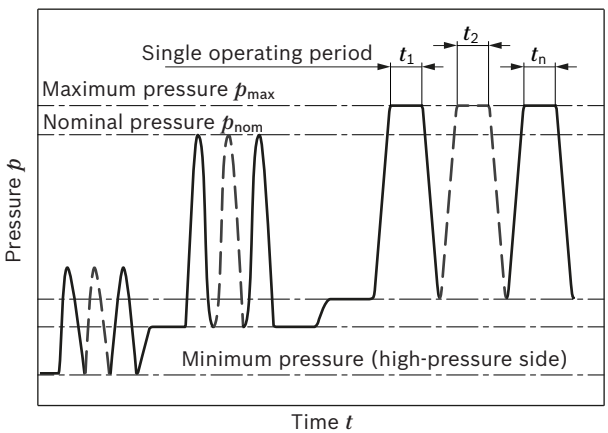

Total operating period = $t_1 + t_2 + ... + t_n$

▼ **Minimum pressure – pump operating mode (inlet)**

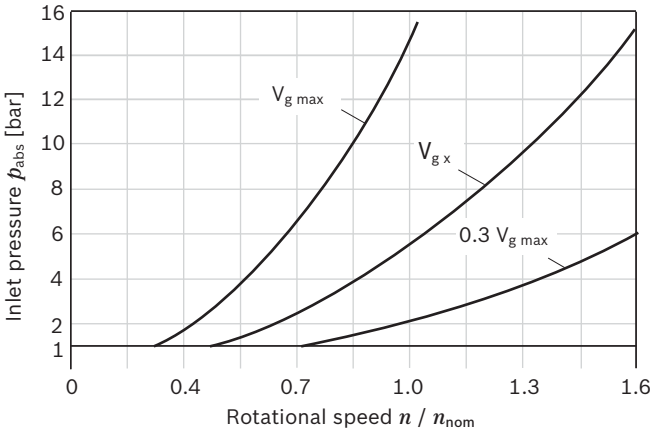

This diagram is valid only for the optimum viscosity range from ν_{opt} = 36 to 16 mm²/s.
Please contact us if these conditions cannot be satisfied.

Notice
Working pressure range valid when using hydraulic fluids based on mineral oils. Values for other hydraulic fluids, please contact us.

Technical data

Size		NG		60	85	115	150	170	215
Displacement geometric, per revolution		$V_{g\,max}$	cm³	62.0	85.2	115.6	152.1	171.8	216.5
		$V_{g\,min}$	cm³	0	0	0	0	0	0
		$V_{g\,x}$	cm³	37	51	69	91	65	82
Maximum speed[1] (complying with the maximum permissible inlet flow)	at $V_{g\,max}$	n_{nom}	rpm	4450	3900	3550	3250	3100	2900
	at $V_g < V_{g\,x}$ (see diagram)	n_{max}	rpm	7200	6800	6150	5600	4900	4600
	at $V_{g\,0}$	n_{max}	rpm	8400	8350	7350	6000	5750	5500
Inlet flow[2]	at n_{nom} and $V_{g\,max}$	$q_{v\,max}$	l/min	275	332	410	494	533	628
Torque[3]	at $V_{g\,max}$ and Δp = 450 bar	T	Nm	444	610	828	1089	1230	1550
Rotary stiffness	$V_{g\,max}$ to $V_g/2$	c_{min}	kNm/rad	15	22	37	44	52	70
	$V_g/2$ to 0 (interpolated)	c_{min}	kNm/rad	45	68	104	124	156	196
Moment of inertia for rotary group		J_{GR}	kgm²	0.0043	0.0072	0.0110	0.0181	0.0213	0.0303
Maximum angular acceleration		α	rad/s²	21000	17500	15500	11000	11000	10000
Case volume		V	l	0.8	1.0	1.5	1.7	2.3	2.8
Weight, approx.		m	kg	28	36	46	61	62	78

Speed range

The minimum rotational speed n_{min} is not limited. For applications with requirements on the evenness of the rotation at low rotational speeds, please contact us.

Notice

- Theoretical values, without efficiency and tolerances; values rounded
- Operation above the maximum values or below the minimum values may result in a loss of function, a reduced service life or in the destruction of the axial piston unit. Other permissible limit values, such as speed variation, reduced angular acceleration as a function of the frequency and the permissible angular acceleration at start (lower than the maximum angular acceleration) can be found in data sheet 90261.

▼ **Permissible displacement in relation to speed**

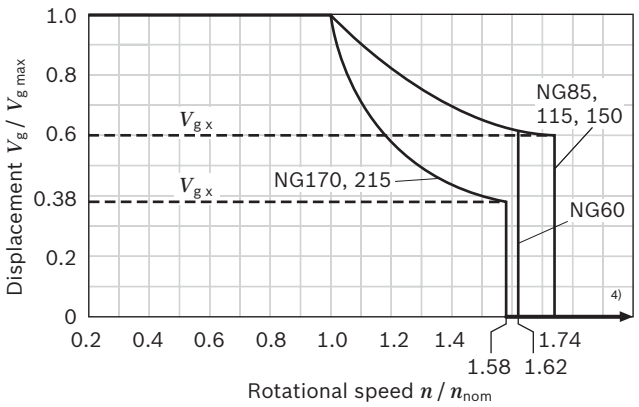

Determining the operating characteristics			
Inlet flow	q_v	$= \frac{V_g \times n}{1000 \times \eta_v}$	[l/min]
Rotational speed	n	$= \frac{q_v \times 1000 \times \eta_v}{V_g}$	[rpm]
Torque	T	$= \frac{V_g \times \Delta p \times \eta_{mh}}{20 \times \pi}$	[Nm]
Power	P	$= \frac{2 \pi \times T \times n}{60000} = \frac{q_v \times \Delta p \times \eta_t}{600}$	[kW]

Key

V_g	=	Displacement per revolution [cm³]
Δp	=	Differential pressure [bar]
n	=	Rotational speed [rpm]
η_v	=	Volumetric efficiency
η_{mh}	=	Mechanical-hydraulic efficiency
η_t	=	Total efficiency ($\eta_t = \eta_v \bullet \eta_{mh}$)

1) The values are valid:
   - For the optimum viscosity range from ν_{opt} = 36 to 16 mm²/s
   - with hydraulic fluid on the basis of mineral oil
2) Note inlet flow limitation due to counterbalance valve (see page 66).
3) Torque without radial force, With radial force see page 10.
4) Values in this range on request

Permissible radial and axial forces of the drive shafts

Size	NG		60	60	85	85	115	115	150	150	150
Drive shaft			1 1/4 in	W35	1 1/2 in	W40	1 3/4 in	W40	1 3/4 in	2 in	W45
Maximum radial force at distance a (from shaft collar) 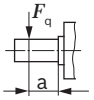	$F_{q\,max}$	N	7620	10266	12463	12323	14902	16727	15948	17424	19534
	a	mm	24.0	20.0	27.0	22.5	33.5	22.5	33.5	33.5	25.0
Maximum torque at $F_{q\,max}$	$T_{q\,max}$	Nm	310	444	595	610	828	828	890	1089	1089
Maximum differential pressure at V_{gmax} and $F_{q\,max}$	$\Delta p_{q\,max}$	bar	315	450	440	450	450	450	370	450	450
Maximum axial force at standstill or depressurized operation 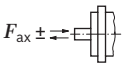	+ $F_{ax\,max}$	N	0	0	0	0	0	0	0	0	0
	− $F_{ax\,max}$	N	500	500	710	710	900	900	1300	1300	1300
Permissible axial force per bar operating pressure	+ $F_{ax\,perm/bar}$	N/bar	7.5	7.5	9.6	9.6	11.3	11.3	13.3	13.3	13.3

Size	NG		170	170	215	215
Drive shaft			2 in	W45	2 in	W50
Maximum radial force at distance a (from shaft collar) 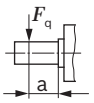	$F_{q\,max}$	N	19370	21220	22602	25016
	a	mm	33.5	25.0	33.5	27.5
Maximum torque at $F_{q\,max}$	$T_{q\,max}$	Nm	1230	1200	1445	1550
Maximum differential pressure at V_{gmax} and $F_{q\,max}$	$\Delta p_{q\,max}$	bar	450	440	420	450
Maximum axial force at standstill or depressurized operation 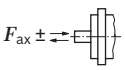	+ $F_{ax\,max}$	N	0	0	0	0
	− $F_{ax\,max}$	N	1120	1120	1250	1250
Permissible axial force per bar operating pressure	+ $F_{ax\,perm/bar}$	N/bar	15.1	15.1	17.0	17.0

Effect of radial force F_q on the service life of bearings

By selecting a suitable direction of radial force F_q, the load on the bearings, caused by the internal rotary group forces can be reduced, thus optimizing the service life of the bearings. Recommended position of mating gear is dependent on direction of rotation. Examples:

Notice

- The values given are maximum values and do not apply to continuous operation.
- The permissible axial force in direction $-F_{ax}$ is to be avoided as the lifetime of the bearing is reduced.
- Special requirements apply in the case of belt drives. Please contact us.

▼ **Toothed gear output drive**

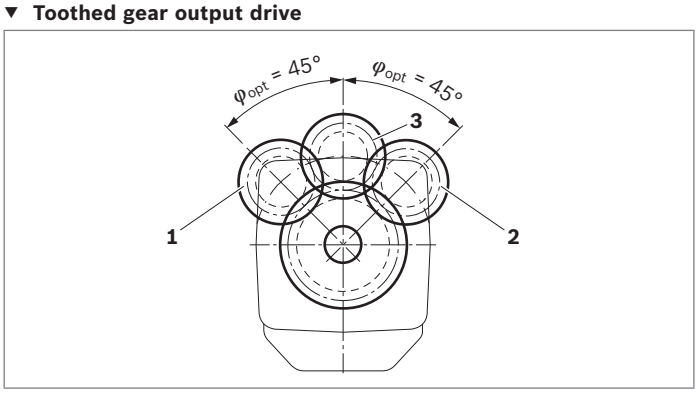

1 Direction of rotation " counter-clockwise", pressure at port **B**
2 Direction of rotation "clockwise", pressure at port **A**
3 Bidirectional direction of rotation

HP – Proportional hydraulic control

The proportional hydraulic control provides infinite adjustment of the displacement. Control is proportional to the pilot pressure applied to port **X**.

HP1, HP2 positive control

- Beginning of control at $V_{g\,min}$ (minimum torque, maximum permissible speed at minimum pilot pressure)
- End of control at $V_{g\,max}$ (maximum torque, minimum speed at maximum pilot pressure)

HP5, HP6 negative control

- Beginning of control at $V_{g\,max}$ (maximum torque, minimum speed at minimum pilot pressure)
- End of control at $V_{g\,min}$ (minimum torque, maximum permissible speed at maximum pilot pressure)

Notice

- Maximum permissible pilot pressure: p_{St} = 100 bar
- The control oil is internally taken from the high pressure side of the motor (**A** or **B**). For reliable control, an operating pressure of at least 30 bar is required in **A** (**B**). If a control operation is performed at an operating pressure < 30 bar, an auxiliary pressure of at least 30 bar must be applied at port **G** via an external check valve. For lower pressures, please contact us.
  Please note that pressures up to 500 bar can occur at port **G**.
- Please state the desired beginning of control in plain text when ordering, e.g.: beginning of control at 10 bar.
- The beginning of control and the HP characteristic curve are influenced by the case pressure. An increase in case pressure causes an increase in the beginning of control (see page 7) and thus a parallel shift of the characteristic.
- A leakage flow of maximum 0.3 l/min can occur at port **X** due to internal leakage (working pressure > pilot pressure). The control is to be suitably configured to avoid an independent build-up of pilot pressure.

Response time damping

The response time damping impacts the swivel behavior of the motor and consequently the machine response speed.

Standard for sizes 60 to 215

HP without damping.

HP.D with throttle pin on both sides, symmetrical (see table)

Optional for sizes 60 to 215

HP with throttle pin on both sides, symmetrical (see table)

▼ **Throttle pin overview**

Size	60	85	115	150	170	215
Groove size [mm]	0.45	0.45	0.55	0.55	0.55	0.65

HP1, HP5 pilot pressure increase Δp_{St} = 10 bar

HP1 positive control

A pilot pressure increase of 10 bar at port **X** results in an increase in displacement from $V_{g\,min}$ to $V_{g\,max}$.

HP5 negative control

A pilot pressure increase of 10 bar at port **X** results in a decrease in displacement from $V_{g\,max}$ to $V_{g\,min}$.

- Beginning of control, setting range 2 to 20 bar
- Standard setting: beginning of control at 3 bar (end of control at 13 bar)

▼ **Characteristic curve**

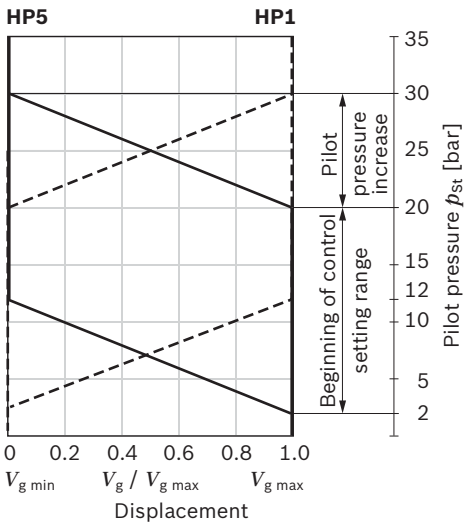

HP2, HP6 pilot pressure increase Δp_{St} = 25 bar

HP2 positive control

A pilot pressure increase of 25 bar at port **X** results in an increase in displacement from $V_{g\,min}$ to $V_{g\,max}$.

HP6 negative control

A pilot pressure increase of 25 bar at port **X** results in a decrease in displacement from $V_{g\,max}$ to $V_{g\,min}$.

- Beginning of control, setting range 5 to 35 bar
- Standard setting: beginning of control at 10 bar (end of control at 35 bar)

▼ **Characteristic curve**

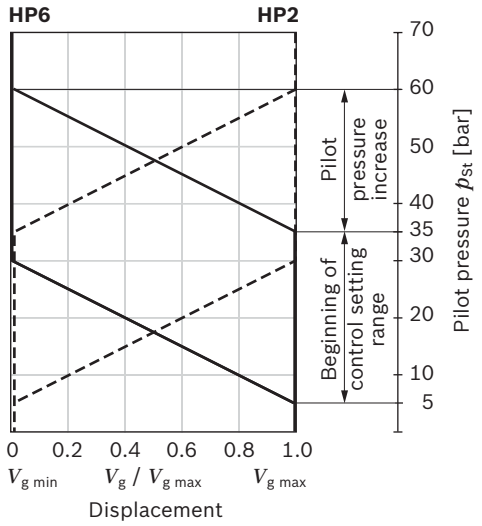

▼ **Circuit diagram HP5, HP6 (negative control)**

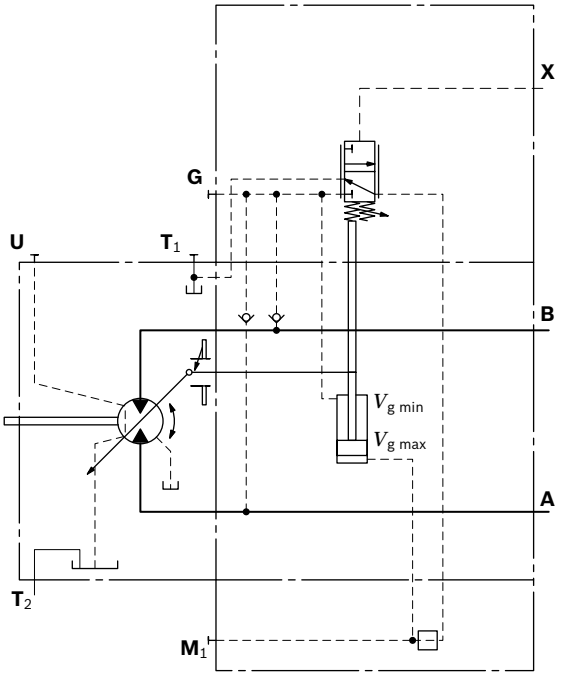

▼ **Circuit diagram HP1, HP2 (positive control)**

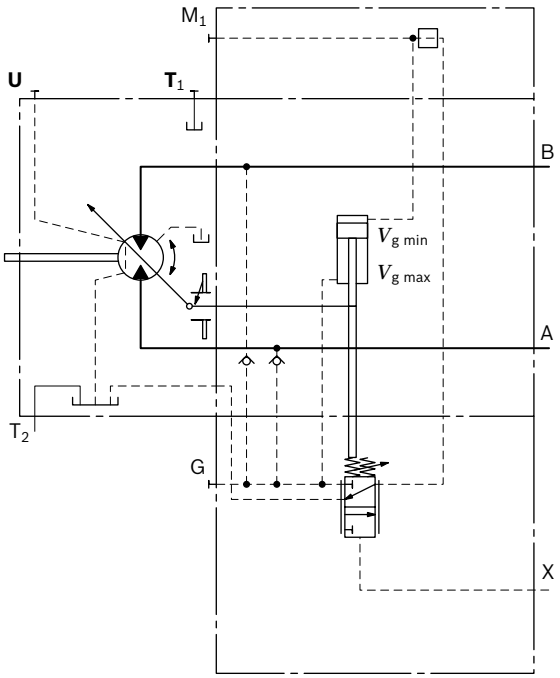

HP5D1, HP6D1 Pressure control, fixed setting

The pressure control overrides the HP control function.
If the load torque or a reduction in motor swivel angle causes the system pressure to reach the setpoint value of the pressure control, the motor will swivel towards a larger displacement.
The increase in the displacement and the resulting reduction in pressure cause the control deviation to decrease.
With the increase in displacement the motor develops more torque, while the pressure remains constant.
Setting range of the pressure control valve 80 to 450 bar

▼ **Circuit diagram HP5D1, HP6D1 (negative control)**

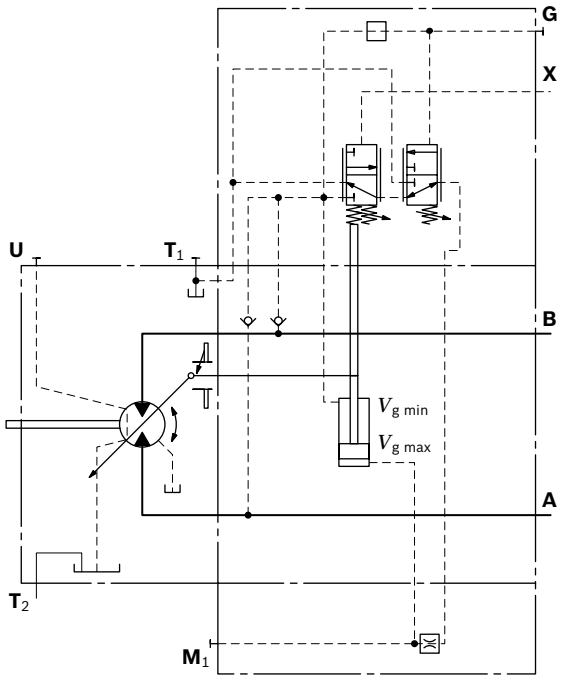

EP – Proportional electric control

The proportional electric control, type EP, provides infinite adjustment of the displacement, proportional to the control current applied to the solenoid.

EP1, EP2 positive control

- Beginning of control at $V_{g\,min}$ (minimum torque, maximum permissible speed at minimum control current)
- End of control at $V_{g\,max}$ (maximum torque, minimum speed at maximum control current)

EP5, EP6 negative control

- Beginning of control at $V_{g\,max}$ (maximum torque, minimum speed at minimum control current)
- End of control at $V_{g\,min}$ (minimum torque, maximum permissible speed at maximum control current)

▼ **Characteristic curve**

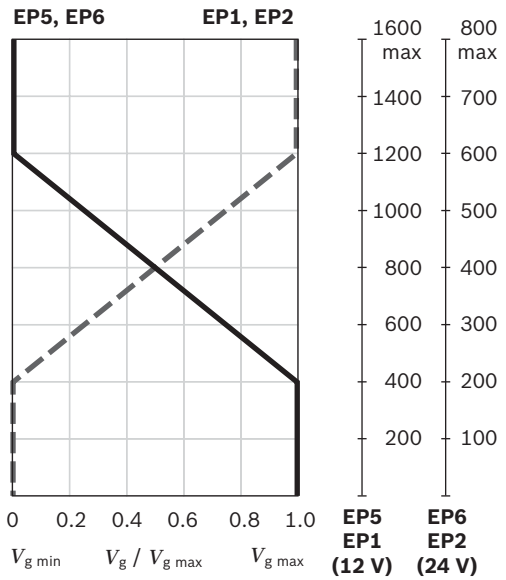

Notice

The control oil is internally taken from the high pressure side of the motor (**A** or **B**). For reliable control, an operating pressure of at least 30 bar is required in **A** (**B**). If a control operation is performed at an operating pressure < 30 bar, an auxiliary pressure of at least 30 bar must be applied at port **G** via an external check valve. For lower pressures, please contact us.

Please note that pressures up to 500 bar can occur at port **G**.

Response time damping

The response time damping impacts the swivel behavior of the motor and consequently the machine response speed.

Standard for sizes 60 to 215

EP without damping.

EP.D with throttle pin on both sides, symmetrical (see table)

Optional for sizes 60 to 215

EP with throttle pin on both sides, symmetrical (see table)

▼ **Throttle pin overview**

Nenngröße	60	85	115	150	170	215
Groove size [mm]	0.45	0.45	0.55	0.55	0.55	0.65

Technical data, solenoid, sizes	EP1, EP5	EP2, EP6
Voltage	12 V (±20 %)	24 V (±20 %)
Control current		
Beginning of control	400 mA	200 mA
End of control	1200 mA	600 mA
Current limit	1.54 A	0.77 A
Nominal resistance (at 20 °C)	5.5 Ω	22.7 Ω
Dither		
Frequency	100 Hz	100 Hz
Minimum oscillation range[1)]	240 mA	120 mA
Duty cycle	100 %	100 %
Type of protection: see connector version on page 62		

Various BODAS controllers with application software and amplifiers are available for controlling the proportional solenoids.

1) Minimum required oscillation range of the control current $\Delta I_{p\text{-}p}$ (peak to peak) within the respective control range (start of control to end of control)

▼ **Circuit diagram EP1, EP2 (positive control)**

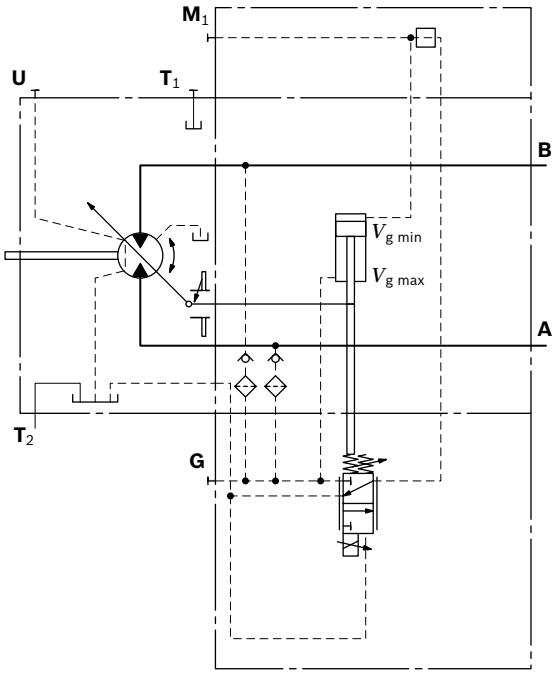

▼ **Circuit diagram EP5, EP6 (negativ control)**

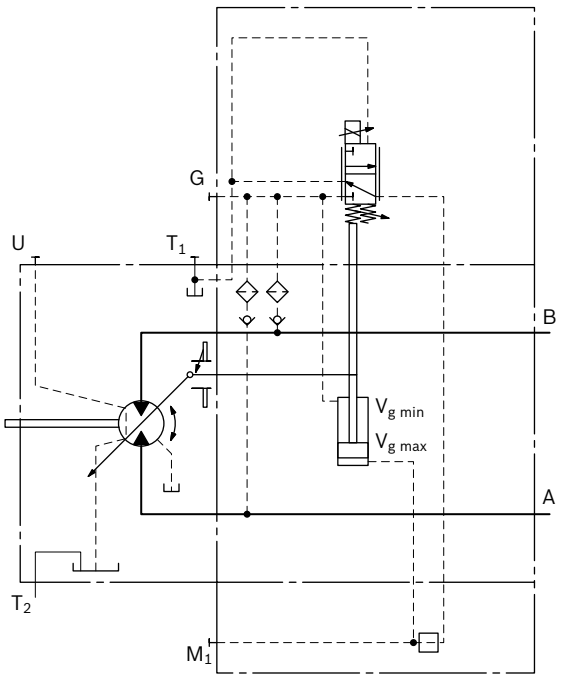

EP5D1, EP6D1 Pressure control, fixed setting

The pressure control overrides the EP control function. If the load torque or a reduction in motor swivel angle causes the system pressure to reach the setpoint value of the pressure control, the motor will swivel towards a larger displacement.

The increase in the displacement and the resulting reduction in pressure cause the control deviation to decrease. With the increase in displacement the motor develops more torque, while the pressure remains constant.

Setting range of the pressure control valve 80 to 450 bar

▼ **Circuit diagram EP5D1, EP6D1 (negativ control)**

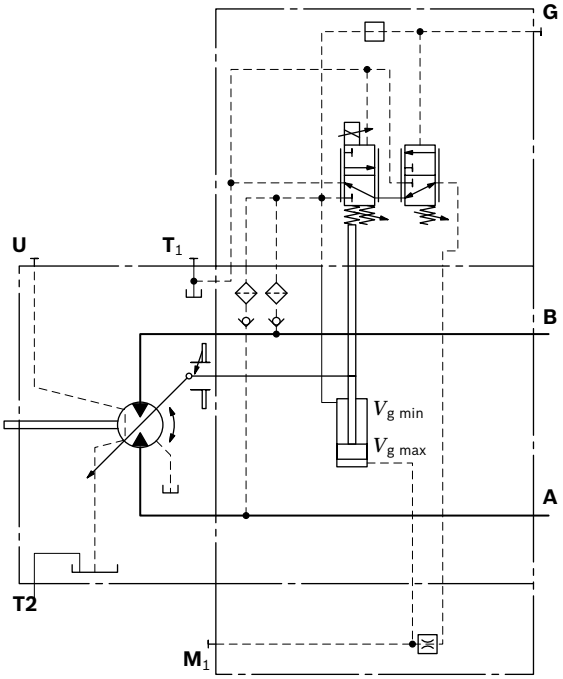

3

HZ – Two-point hydraulic control

The two-point hydraulic control allows the displacement to be set to either $V_{g\,min}$ or $V_{g\,max}$ by switching the pilot pressure at port **X** on or off.

HZ5, HZ7 negative control

- Position at $V_{g\,max}$ (without pilot pressure, maximum torque, minimum speed)
- Position at $V_{g\,min}$ (with pilot pressure > 15 bar activated, minimum torque, maximum permissible speed)

▼ **Characteristic curve HZ5, HZ7**

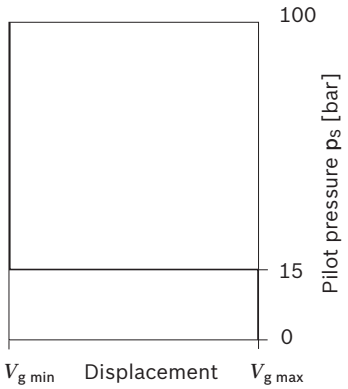

Notice

- Maximum permissible pilot pressure: 100 bar
- The control oil is internally taken out of the high pressure side of the motor (**A** or **B**). For reliable control, an operating pressure of at least 30 bar is required in **A** (**B**). If a control operation is performed at an operating pressure < 30 bar, an auxiliary pressure of at least 30 bar must be applied at port **G** via an external check valve. For lower pressures, please contact us.
  Please note that pressures up to 500 bar can occur at port **G**.
- At port **X** a leakage flow of maximum 0.3 l/min occurs (working pressure > pilot pressure). To avoid a build-up of pilot pressure, pressure is to be relieved from port **X** to the reservoir.

Response time damping

The response time damping impacts the swivel behavior of the motor and consequently the machine response speed.

Standard for szes 150 to 215

HZ5 with throttle pin on both sides, symmetrical (see table)

Standard for sizes 60 to 115

HZ7 (synchronous piston) with throttle pin on both sides, symmetrical (see table)

▼ **Throttle pin overview**

Sizes	60	85	115	150	170	215
Groove size [mm]	0.30	0.30	0.30	0.55	0.55	0.65

▼ **Circuit diagram HZ5 (negative control) sizes 150 to 215**

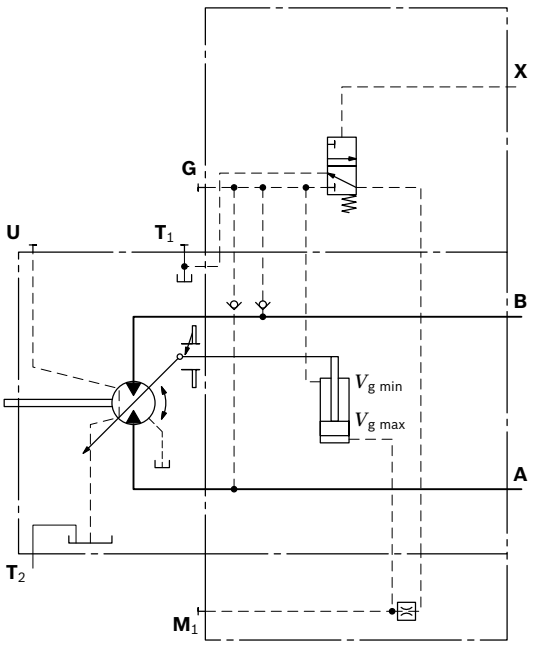

▼ **Circuit diagram HZ7 (negative control) size 60 to 115**

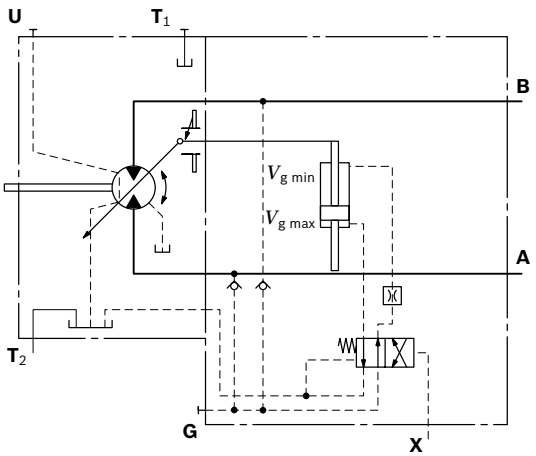

EZ – Two-point electric control

The two-point electric control allows the displacement to be set to either $V_{g\,min}$ or $V_{g\,max}$ by switching the electric current to a switching solenoid on or off.

Notice

The control oil is internally taken out of the high pressure side of the motor (**A** or **B**). For reliable control, an operating pressure of at least 30 bar is required in **A** (**B**). If a control operation is performed at an operating pressure < 30 bar, an auxiliary pressure of at least 30 bar must be applied at port **G** via an external check valve. For lower pressures, please contact us.
Please note that pressures up to 500 bar can occur at port **G**.

Response time damping

The response time damping impacts the swivel behavior of the motor and consequently the machine response speed.

Standard for sizes 150 to 215

EZ5, EZ6 with throttle pin on both sides, symmetrical (see table)

Standard for sizes 60 to 115

EZ7, EZ8 (synchronous piston) with throttle pin on both sides, symmetrical (see table)

▼ **Throttle pin overview**

Size	60	85	115	150	170	215
Groove size [mm]	0.30	0.30	0.30	0.55	0.55	0.65

Sizes 150 to 215

Technical data, solenoid with ø37	EZ5	EZ6
Voltage	12 V (±20 %)	24 V (±20 %)
Position $V_{g\,max}$	de-energized	de-energized
Position $V_{g\,min}$	energized	energized
Nominal resistance (at 20 °C)	5.5 Ω	21.7 Ω
Nominal power	26.2 W	26.5 W
Minimum required active current	1.32 A	0.67 A
Duty cycle	100 %	100 %
Type of protection: see connector version on page 62		

▼ **Circuit diagram EZ5, EZ6 (negative control)**

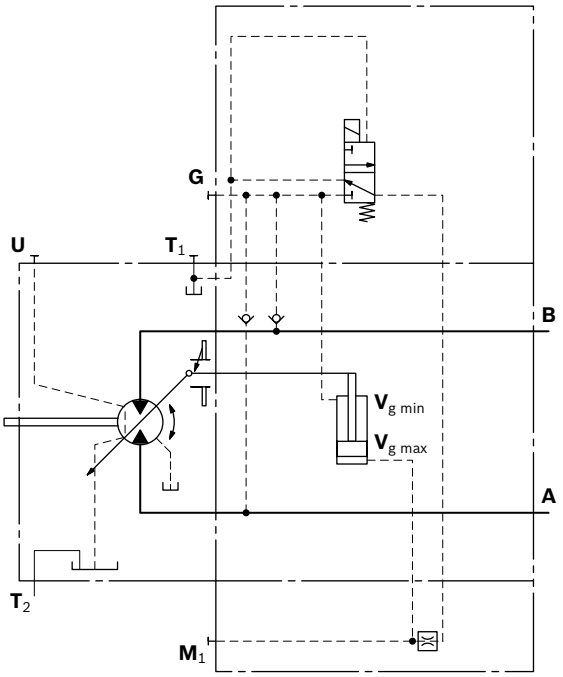

Sizes 60 to 115

Technical data, solenoid with ø45	EZ7	EZ8
Voltage	12 V (±20 %)	24 V (±20 %)
Position $V_{g\,max}$	de-energized	de-energized
Position $V_{g\,min}$	energized	energized
Nominal resistance (at 20 °C)	4.8 Ω	19.2 Ω
Nominal power	30 W	30 W
Minimum required active current	1.5 A	0.75 A
Duty cycle	100 %	100 %
Type of protection: see connector version on page 62		

▼ **Circuit diagram EZ7, EZ8 (negative control)**

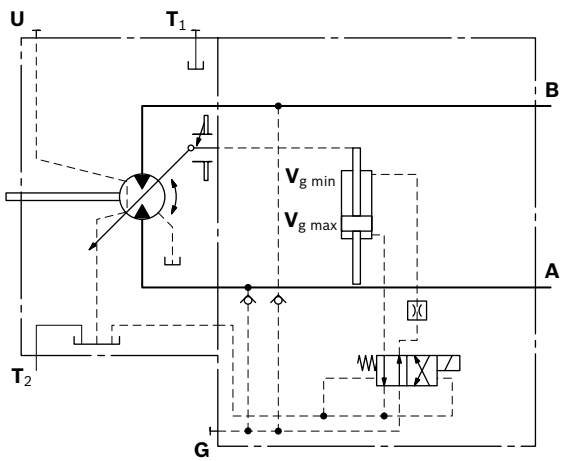

HA – Automatic high-pressure related control

The automatic high-pressure related control adjusts the displacement automatically depending on the operating pressure.
The displacement of the A6VM motor with HA control is $V_{g\,min}$ (maximum speed and minimum torque). The control device measures internally the operating pressure at **A** or **B** (no control line required) and upon reaching the set beginning of control, the controller swivels the motor from $V_{g\,min}$ to $V_{g\,max}$ with increase of operating pressure. The displacement is modulated between $V_{g\,min}$ and $V_{g\,max}$, thereby depending on load conditions.

HA1, HA2 positive control

- Beginning of control at $V_{g\,min}$ (minimum torque, maximum speed)
- End of control at $V_{g\,max}$ (maximum torque, minimum speed)

Notice

- For safety reasons, winch drives are not permissible with beginning of control at $V_{g\,min}$ (standard for HA).
- The control oil is internally taken from the high pressure side of the motor (**A** or **B**). For reliable control, an operating pressure of at least 30 bar is required in **A** (**B**). If a control operation is performed at an operating pressure < 30 bar, an auxiliary pressure of at least 30 bar must be applied at port **G** via an external check valve. For lower pressures, please contact us.
  Please note that pressures up to 500 bar can occur at port **G**.
- The beginning of control and the HA.T3 characteristic curve are influenced by case pressure. An increase in case pressure causes an increase in the beginning of control (see page 7) and thus a parallel shift of the characteristic.
- At port **X** a leakage flow of maximum 0.3 l/min occurs (working pressure > pilot pressure). To avoid a build-up of pilot pressure, pressure is to be relieved from port **X** to the reservoir. **Only with HA.T control**.

Response time damping

The response time damping impacts the swivel behavior of the motor and consequently the machine response speed.

Standard for sizes 60 to 215

HA1,2 with one-sided throttle pin, throttling occurs from $V_{g\,min}$ to $V_{g\,max}$. (see table)
HA3 and HA3T3 with BVI and throttle pin on both sides, 0.30, symmetrical

▼ **Throttle pin overview**

Size	60	85	115	150	170	215
Groove size [mm]	0.45	0.45	0.55	0.55	0.55	0.65

Standard for sizes 60 to 215

HA with BVD or BVE counterbalance valve, with throttle screw (see table)

▼ **Throttle screw**

Size	60	85	115	150	170	215
Diameter [mm]	0.80	0.80	0.80	0.80	0.80	0.80

HA1 with minimum pressure increase, positive control

An operating pressure increase of Δp ≤ approx. 10 bar results in an increase in displacement from $V_{g\,min}$ towards $V_{g\,max}$.

Beginning of control, setting range 80 to 350 bar

Please state the desired beginning of control in plain text when ordering, e.g.: beginning of control at 300 bar.

HA2 with pressure increase, positive control

An operating pressure increase of Δp approx. 100 bar results in an increase in displacement from $V_{g\,min}$ to $V_{g\,max}$.

Beginning of control, setting range 80 to 350 bar

Please state the desired beginning of control in plain text when ordering, e.g.: beginning of control at 200 bar

▼ **Characteristic curve HA1**

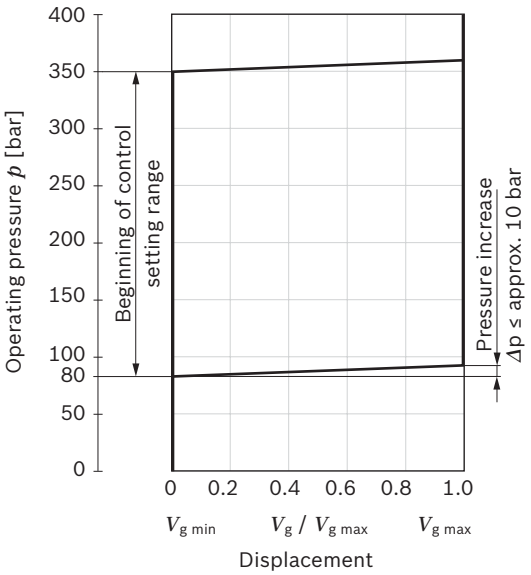

▼ **Characteristic curve HA2**

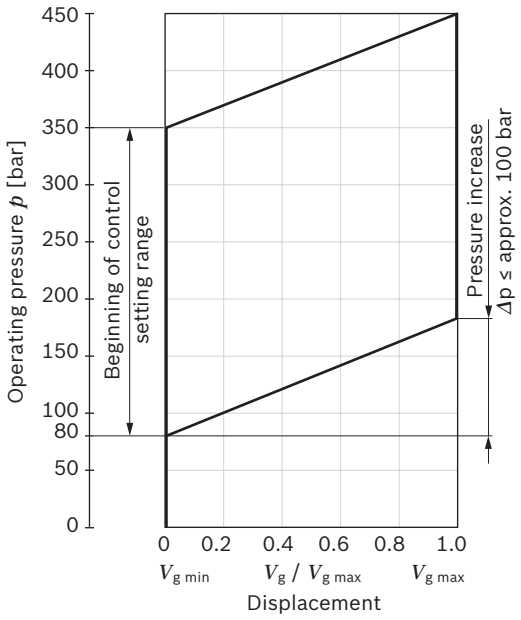

▼ **Circuit diagram HA1**

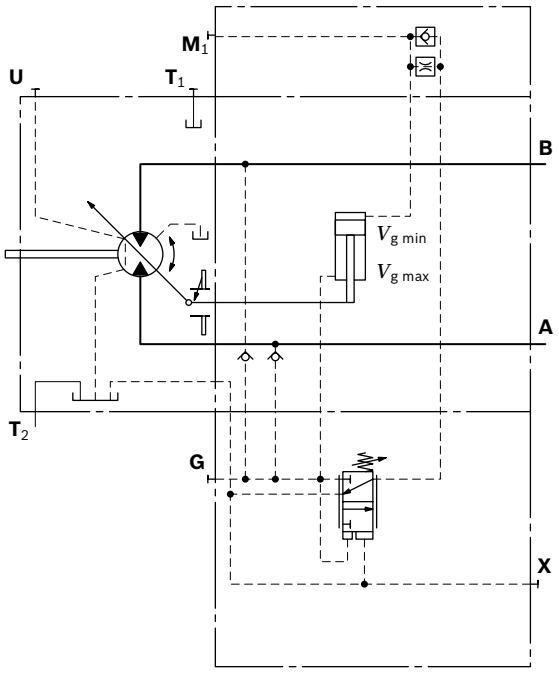

▼ **Circuit diagram HA2**

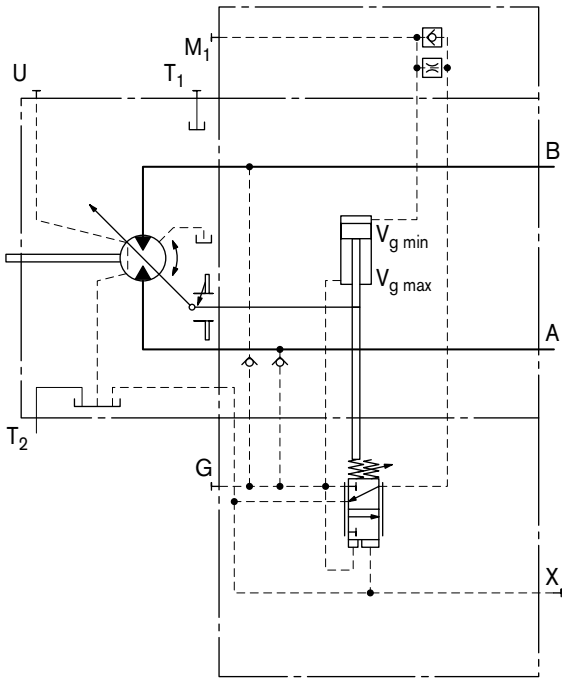

HA.T3 override, hydraulic, remote controlled, proportional

With the HA.T3 control, the beginning of control can be influenced by applying a pilot pressure to port **X**.
For each 1 bar of pilot pressure increase, the beginning of control is reduced by 17 bar.

Beginning of control setting	300 bar	300 bar
Pilot pressure at port **X**	0 bar	10 bar
Beginning of control at	300 bar	130 bar

Notice

Maximum permissible pilot pressure 100 bar.

▼ **Circuit diagram HA1T3**

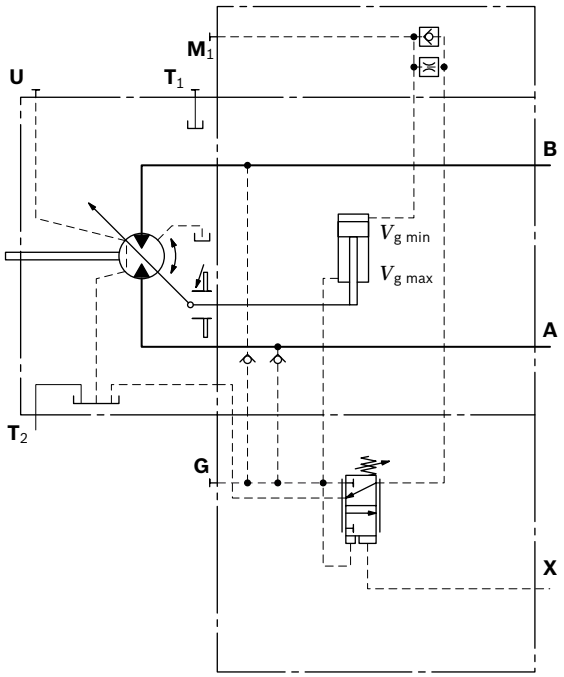

▼ **Circuit diagram HA2T3**

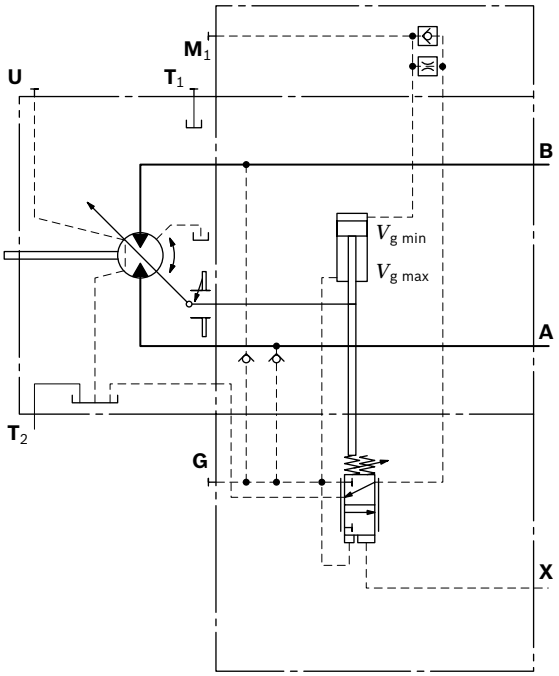

HA.U1, HA.U2 electric override, two-point

With the HA.U1 or HA.U2 control, the beginning of control can be overridden by an electric signal to a switching solenoid. When the override solenoid is energized, the variable motor swivels to maximum swivel angle, without intermediate position.

The beginning of control can be set between 80 and 300 bar (specify required setting in plain text when ordering).

Technical data, solenoid with ø45	U1	U2
Voltage	12 V (±20 %)	24 V (±20 %)
No override	de-energized	de-energized
Position $V_{g\,max}$	energized	energized
Nominal resistance (at 20 °C)	4.8 Ω	19.2 Ω
Nominal power	30 W	30 W
Minimum required active current	1.5 A	0.75 A
Duty cycle	100 %	100 %
Type of protection: see connector version on page 62		

▼ **Circuit diagram HA1U1, HA1U2**

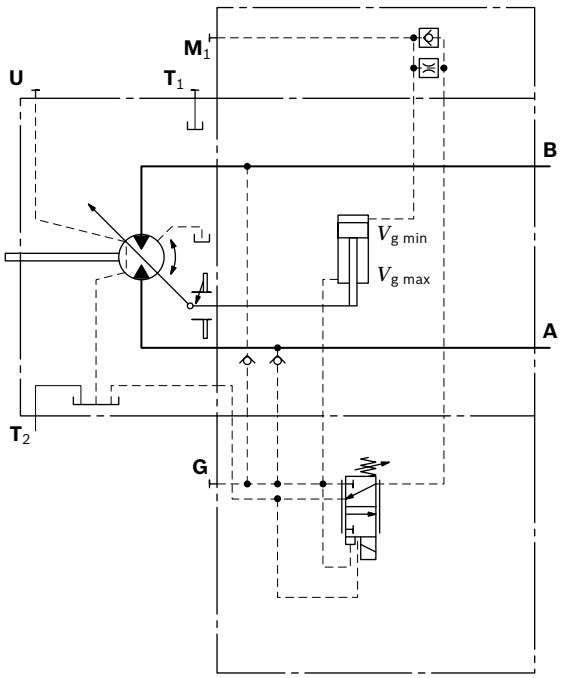

▼ **Circuit diagram HA2U1, HA2U2**

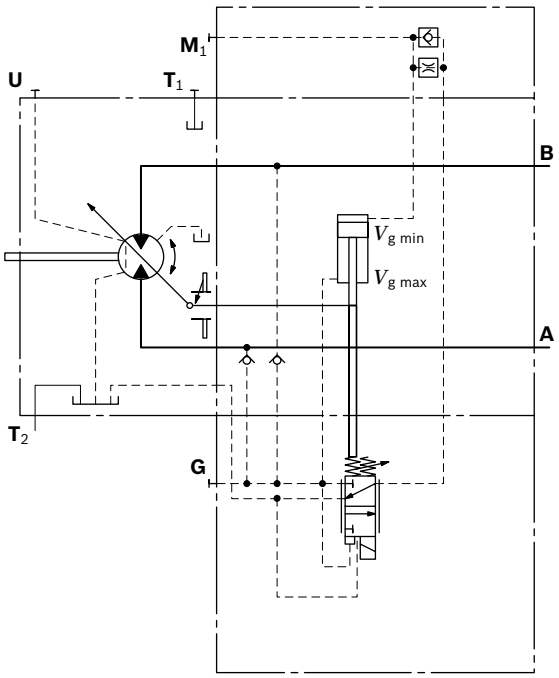

HA.R1, HA.R2 electric override, electric travel direction valve

With the HA.R1 or HA.R2 control, the beginning of control can be overridden by an electric signal to switching solenoid **b**. When the override solenoid is energized, the variable motor swivels to maximum swivel angle, without intermediate position.

The travel direction valve ensures that the preselected pressure side of the hydraulic motor (**A** or **B**) is always connected to the HA control, and thus determines the swivel angle, even if the high-pressure side changes (e.g. -travel drive during a downhill operation). This thereby prevents undesired jerky deceleration and/or braking characteristics.

The travel direction valve (see page 25) is either pressure spring or switched by energizing switching solenoid **a**, depending on the direction of rotation (travel direction).

Electric override

Technical data, solenoid b with ø45	R1	R2
Voltage	12 V (±20 %)	24 V (±20 %)
No override	de-energized	de-energized
Position $V_{g\,max}$	energized	energized
Nominal resistance (at 20 °C)	4.8 Ω	19.2 Ω
Nominal power	30 W	30 W
Minimum required active current	1.5 A	0.75 A
Duty cycle	100 %	100 %
Type of protection: see connector version on page 62		

Travel direction valve, electric

Technical data, solenoid a with ø37		R1	R2
Voltage		12 V (±20 %)	24 V (±20 %)
Direction of rotation	Operating pressure in		
ccw	**B**	energized	energized
cw	**A**	de-energized	de-energized
Nominal resistance (at 20 °C)		5.5 Ω	21.7 Ω
Nominal power		26.2 W	26.5 W
Minimum required active current		1.32 A	0.67 A
Duty cycle		100 %	100 %
Type of protection: see connector version on page 62			

▼ **Circuit diagram HA1R1, HA1R2**

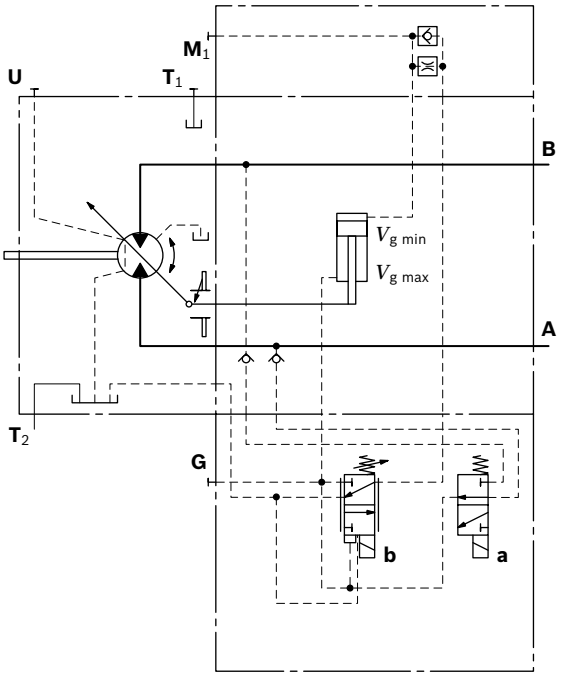

▼ **Circuit diagram HA2R1, HA2R2**

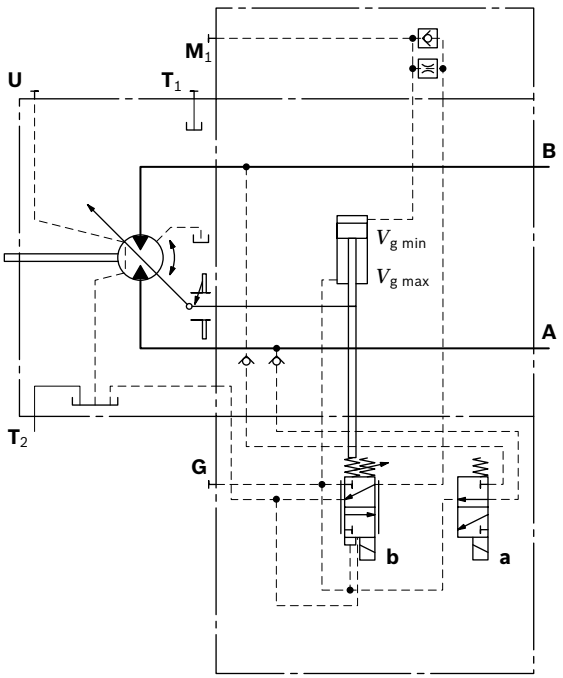

DA – Automatic speed-related control

The variable motor A6VM with automatic speed-related control, type DA, is intended for use in hydrostatic travel drives in combination with the variable pump A4VG with DA control.
A drive-speed-related pilot pressure signal is generated by the A4VG variable pump, and that signal, together with the operating pressure, regulates the swivel angle of the hydraulic motor.
Increasing pump speed, i.e. increasing pilot pressure, causes the motor to swivel to a smaller displacement (lower torque, higher speed), depending on the operating pressure.
If the operating pressure exceeds the pressure setpoint set on the controller, the variable motor swivels to a larger displacement (higher torque, lower speed).

- Pressure ratio p_{St}/p_{HD} = 5/100

DA closed loop control is only suitable for certain types of drive systems and requires review of the engine and vehicle parameters to ensure that the motor is used correctly and that machine operation is safe and efficient. We recommend that all DA applications be reviewed by a Bosch Rexroth application engineer.
Detailed information is available from our sales organization.

Notice
The beginning of control and the DA characteristic curve a influenced by case pressure. An increase in case pressure causes an decrease in the beginning of control (see page 7) and thus a parallel shift of the characteristic.

Response time damping
The response time damping impacts the swivel behavior of the motor and consequently the machine response speed.
Standard for sizes 60 to 215
DA with throttle pin on one side, throttling occurs from $V_{g\,min}$ to $V_{g\,max}$ (see table).

▼ **Throttle pin overview**

Size	60	85	115	150	170	215
Groove size [mm]	0.45	0.45	0.55	0.55	0.55	0.65

DA0 hydraulic travel direction valve, negative control
Depending on the direction of rotation (travel direction), the travel direction valve is switched by using pilot pressures connections $\mathbf{X_1}$ or $\mathbf{X_2}$.

Direction of rotation	Operating pressure in	Pilot pressure in
cw	**A**	$\mathbf{X_1}$
ccw	**B**	$\mathbf{X_2}$

▼ **Circuit diagram DA0**

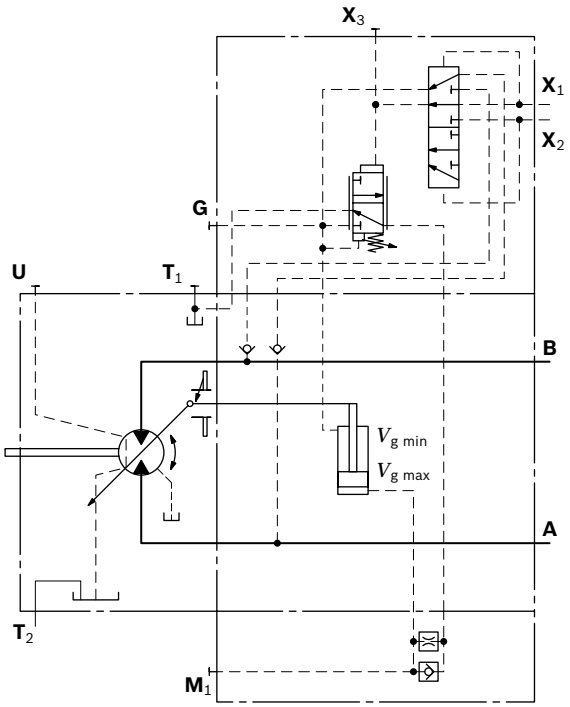

DA1, DA2 electric travel direction valve + electric $V_{g\,max}$ circuit, negative control

The travel direction valve is either pressure spring offset or switched by energizing switching solenoid **a**, depending on the direction of rotation (travel direction).
When the switching solenoid **b** is energized, the DA control is overridden and the motor swivels to maximum displacement (high torque, lower speed) (electric $V_{g\,max}$-circuit).

Travel direction valve, electric

Technical data, solenoid a with ø37		DA1	DA2
Voltage		12 V (±20 %)	24 V (±20 %)
Direction of rotation	Operating pressure in		
ccw	**B**	de-energized	de-energized
cw	**A**	energized	energized
Nominal resistance (at 20 °C)		5.5 Ω	21.7 Ω
Nominal power		26.2 W	26.5 W
Minimum required active current		1.32 A	0.67 A
Duty cycle		100 %	100 %
Type of protection: see connector version on page 62			

Electric override

Technical data, solenoid b with ø37	R1	R2
Voltage	12 V (±20 %)	24 V (±20 %)
No override	de-energized	de-energized
Position $V_{g\,max}$	energized	energized
Nominal resistance (at 20 °C)	5.5 Ω	21.7 Ω
Nominal power	26.2 W	26.5 W
Minimum required active current	1.32 A	0.67 A
Duty cycle	100 %	100 %
Type of protection: see connector version on page 62		

▼ **Circuit diagram DA1, DA2**

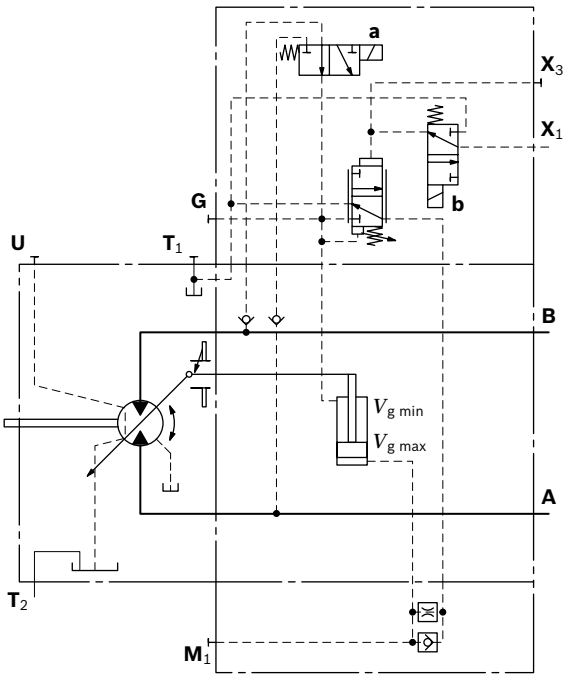

Electric travel direction valve (for DA, HA.R)

Application in travel drives in closed circuits. The travel direction valve of the motor is actuated by an electric signal that also switches the swivel direction of the travel drive pump (e.g. A4VG with DA control valve).
If the pump in the closed circuit is switched to the neutral position or into reverse, the vehicle may experience jerky deceleration or braking, depending on the vehicle's mass and current travel speed.
When the travel direction valve of the pump (e.g. 4/3-directional valve of the DA-control) is switched to

- the neutral position,
  the electric circuitry causes the previous signal on the travel direction valve on the motor to be retained.
- Reversing,
  the travel direction valve causes the travel direction valve of the motor to switch to the other travel direction following a time delay (approx. 0.8 s) with respect to the pump.

As a result, jerky deceleration or braking is prevented in both cases.

▼ **Circuit diagram - electric travel direction valve**

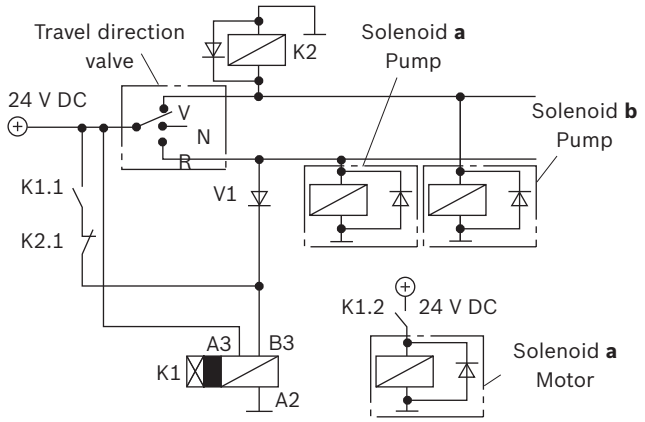

Notice
The shown diodes and relays are not included in the scope of delivery of the motor.

▼ **Control DA1, DA**

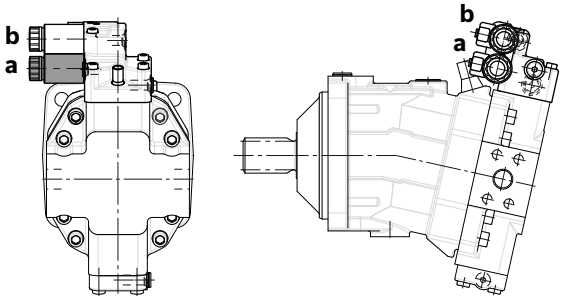

▼ **Control HA1R., HA2R.**

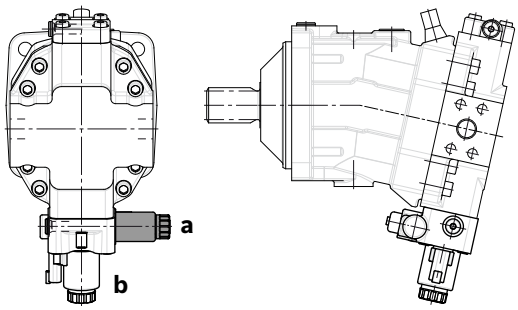

Switching solenoid **a** on the travel direction valve

3

Dimensions size 60

EP5, EP6 – Proportional electric control, negative control

Port plate 2 — SAE working port **A** and **B** at side, opposite

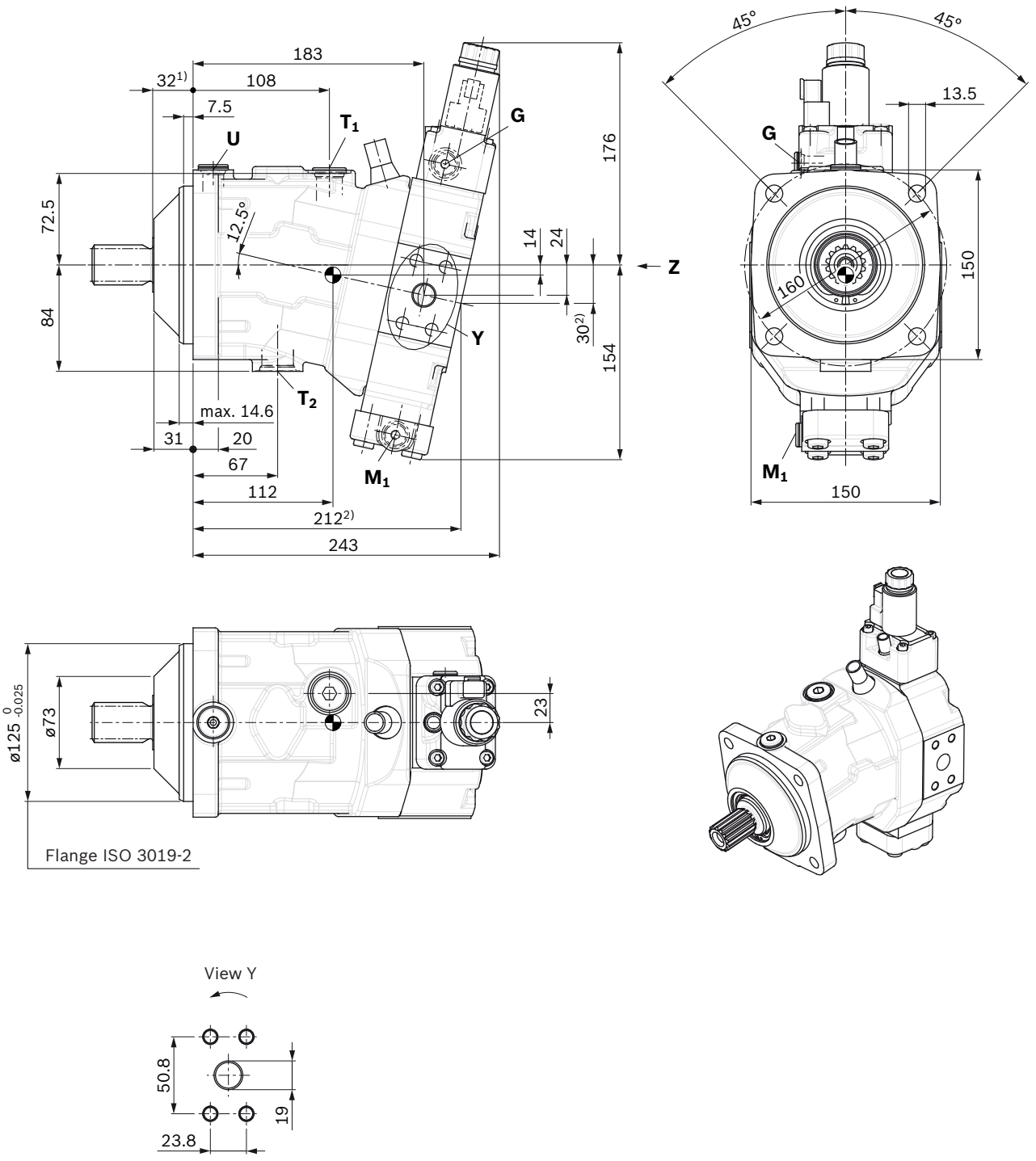

Center of gravity

1) To shaft collar

2) Port plate 1 — SAE working port **A** and **B** at rear

▼ **Location of the service line ports on the port plates** (view **Z**)

2 SAE working port **A** and **B** at side, opposite

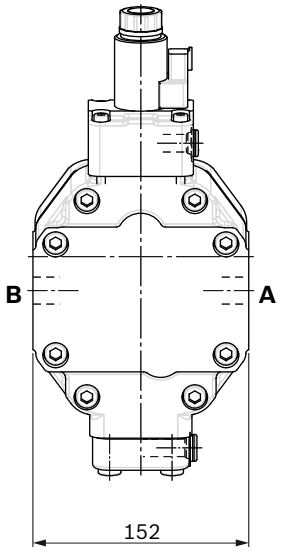

1 SAE working port **A** and **B** at rear

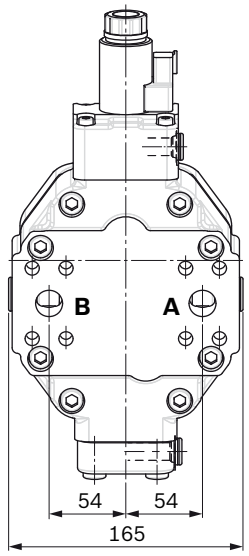

2 SAE working port **A** and **B** at side, opposite only HZ7, EZ7/8

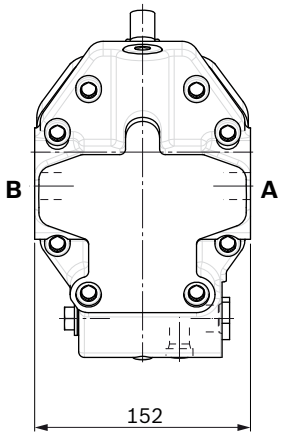

1 SAE working port **A** and **B** at rear only HZ7, EZ7/8

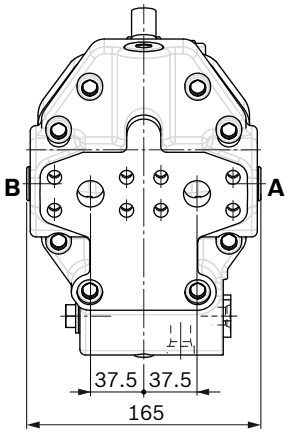

▼ **Splined shaft SAE J744**

S7 – 1 1/4 in 14T 12/24DP[1)]

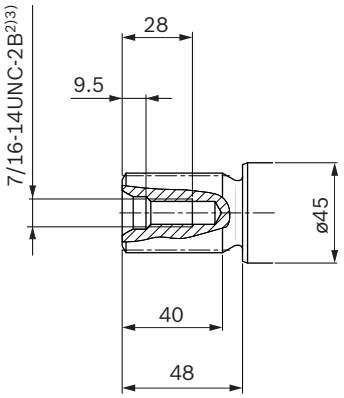

▼ **Splined shaft DIN 5480**

Z8 – W35×2×16×9g

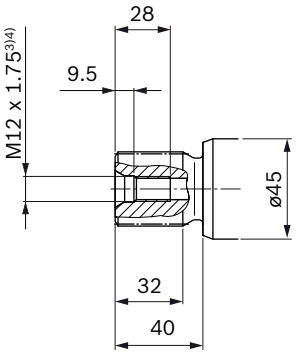

1) Involute spline acc. to ANSI B92.1a, 30° pressure angle, flat root, side fit, tolerance class 5
2) Thread according to ASME B1.1
3) For notes on tightening torques, see instruction manual
4) Center bore according to DIN 332 (thread according to DIN 13)

RE 91 210/06.2012, Bosch Rexroth AG

Ports		Standard	Size[1]	p_{max} [bar][2]	Status[6]
A, B	Working port Fastening thread A/B	SAE J518[3] DIN 13	3/4 in M10 × 1.5; 17 deep	500	O
T_1	Drain port	ISO 6149[5]	M22 × 1.5; 15.5 deep	3	X[4]
T_2	Drain port	ISO 6149[5]	M27 × 2; 19 deep	3	O[4]
G	Synchronous control	ISO 6149[5]	M14 × 1.5; 11.5 deep	500	X
U	Bearing flushing	ISO 6149[5]	M18 × 1.5; 14.5 deep	3	X
X	Pilot signal (HP, HZ, HA1T/HA2T)	ISO 6149[5]	M14 × 1.5; 11.5 deep	100	O
X	Pilot signal (HA1, HA2)	ISO 6149[5]	M14 × 1.5; 11.5 deep	3	X
X_1, X_2	Pilot signal (DA0)	ISO 8434-1	SDSC-L8×M12-F	40	O
X_1	Pilot signal (DA1, DA2)	ISO 6149[5]	M14 × 1.5; 11.5 deep	40	O
X_3	Pilot signal (DA1, DA2)	ISO 6149[5]	M14 × 1.5; 11.5 deep	40	X
M_1	Stroking chamber measurement	ISO 6149[5]	M14 × 1.5; 11.5 deep	500	X

1) For notes on tightening torques, see instruction manual
2) Depending on the application, momentary pressure peaks can occur.
3) Keep this in mind when selecting measuring devices and fittings.
4) Only dimensions according to SAE J518, metric fastening thread is a deviation from standard.
5) Depending on installation position, **T_1** or **T_2** must be connected (see also installation instructions on page 72).
6) The countersink can be deeper than as specified in the standard.
7) O = Must be connected (plugged on delivery)
X = Plugged (in normal operation)

▼ **EP1, EP2** – Electric proportional control, positive control

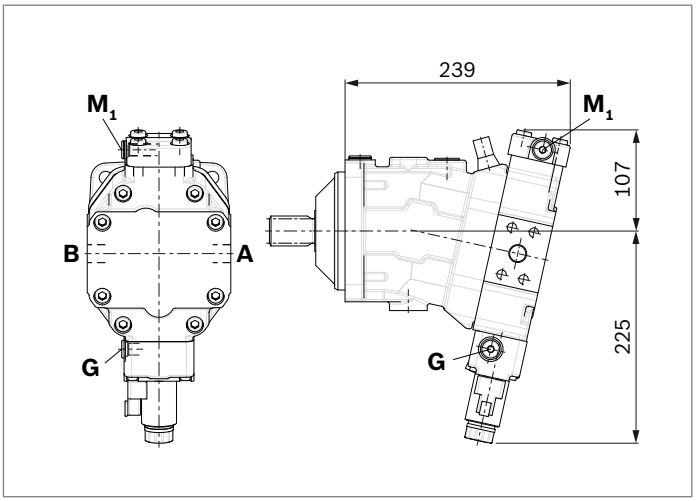

▼ **EP5D1, EP6D1** – Electric proportional control, negative control, with pressure control, fixed

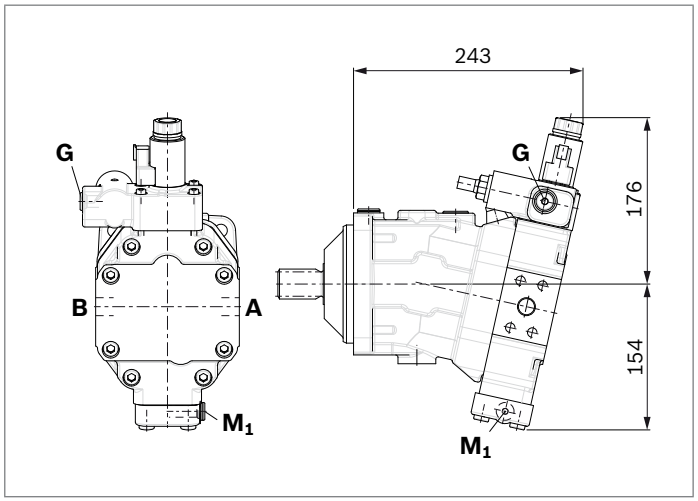

▼ **HP1, HP2** – Hydraulic proportional control, positive control

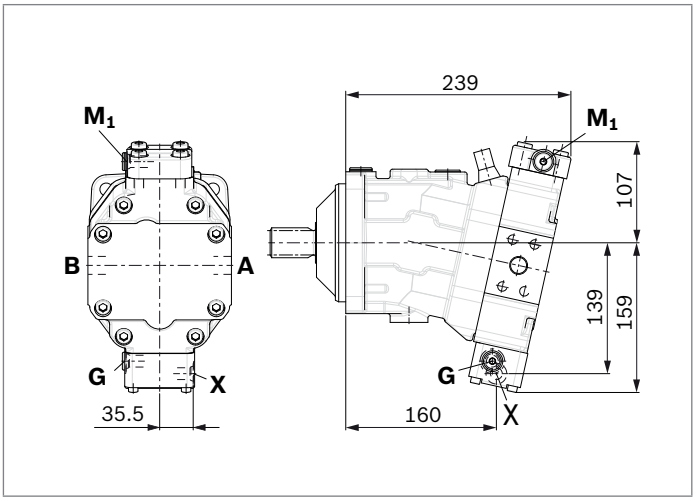

▼ **HP5, HP6** – Hydraulic proportional control, negative control

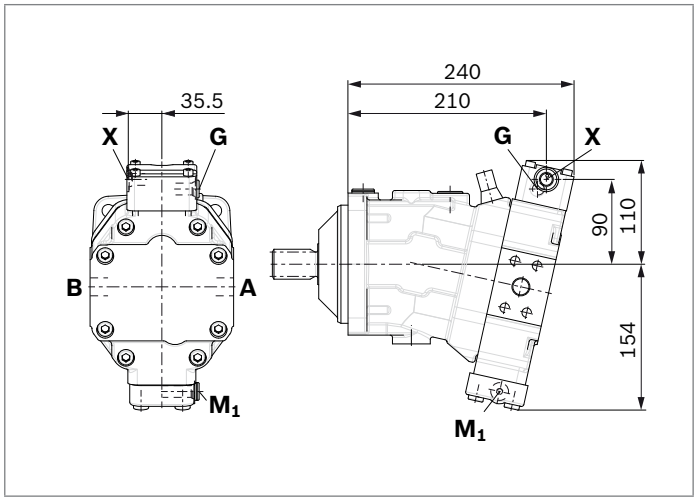

▼ **HP5D1, HP6D1** – Hydraulic proportional control, negative control, with pressure control, fixed

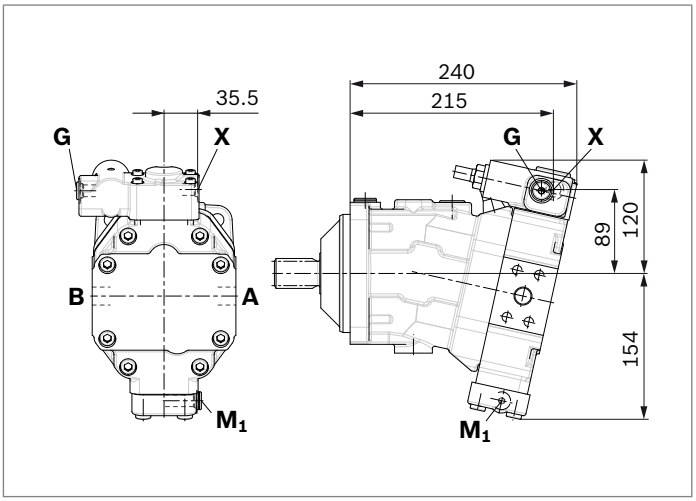

▼ **HZ7** – Hydraulic two-point control, negative control

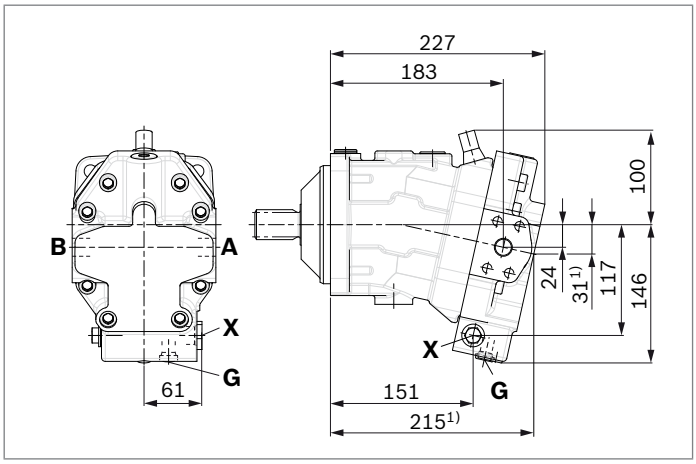

▼ **EZ7, EZ8** – Electric two-point control, negative control

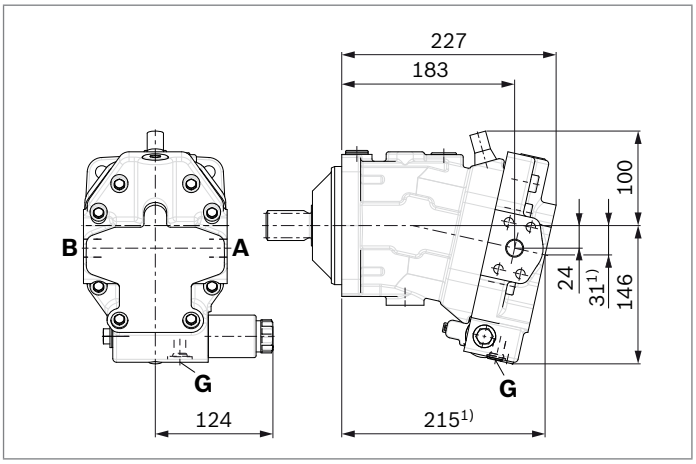

▼ **HA1, HA2 / HA1T3, HA2T3** – Automatic high-pressure-related control, positive control, with override hydraulic remote controlled, proportional

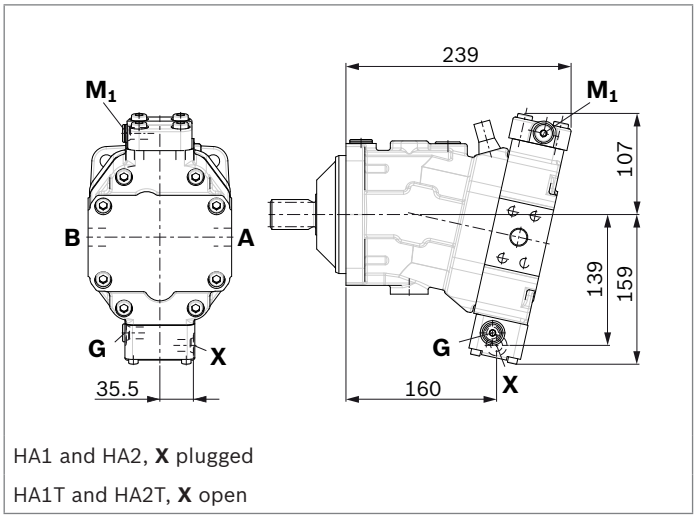

HA1 and HA2, **X** plugged

HA1T and HA2T, **X** open

▼ **HA1U1, HA2U2** – Automatic high-pressure-related control, positive control, with override, electric, two-point

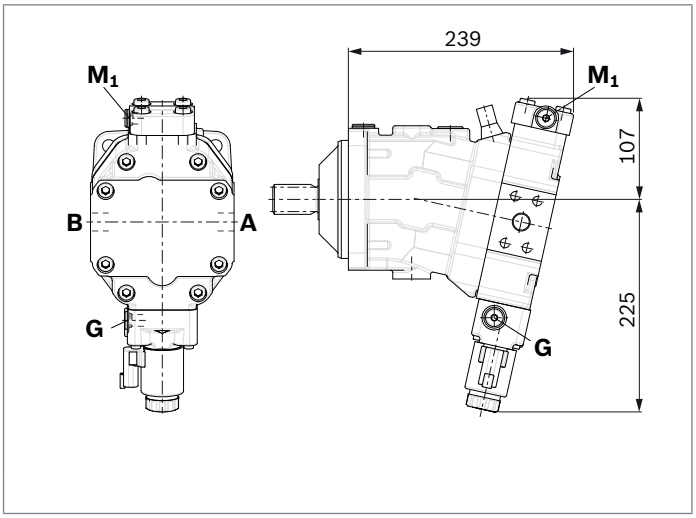

▼ **HA1R1, HA2R2** – Automatic high-pressure-related control, positive control, with override, electric and travel direction valve, electric

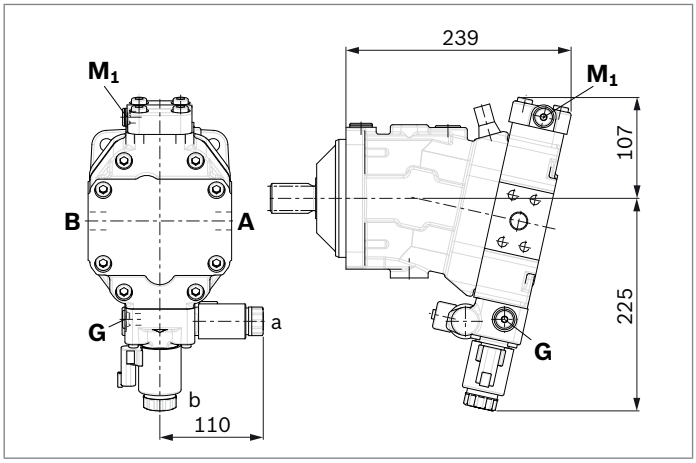

1) Port plate 1 – SAE working port **A** and **B** at rear

▼ **DA0** – Automatic speed-related control, negative control, with hydraulic travel direction valve

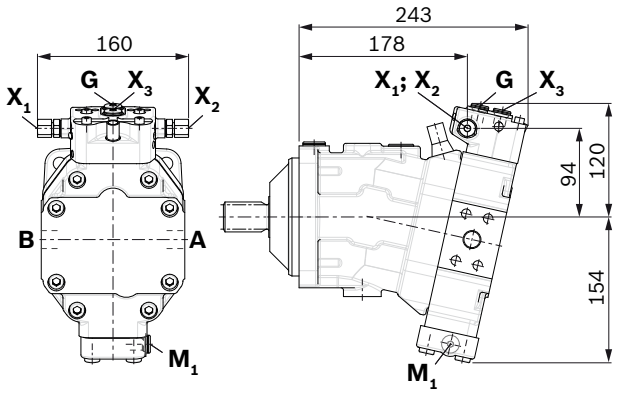

X$_1$, **X**$_2$ pipe fitting SDSC – L8×M12 – F according to ISO 8434-1

Use assembled fitting!

▼ **DA1, DA2** – Automatic speed-related control, negative control, with electric travel direction valve and electric $V_{g\,max}$ circuit

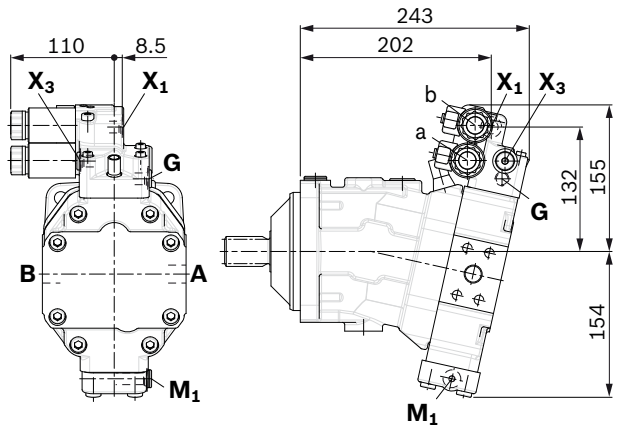

Dimensions size 85

EP5, EP6 – Proportional electric control, negative control

Port plate 2 — SAE working port **A** and **B** at side, opposite

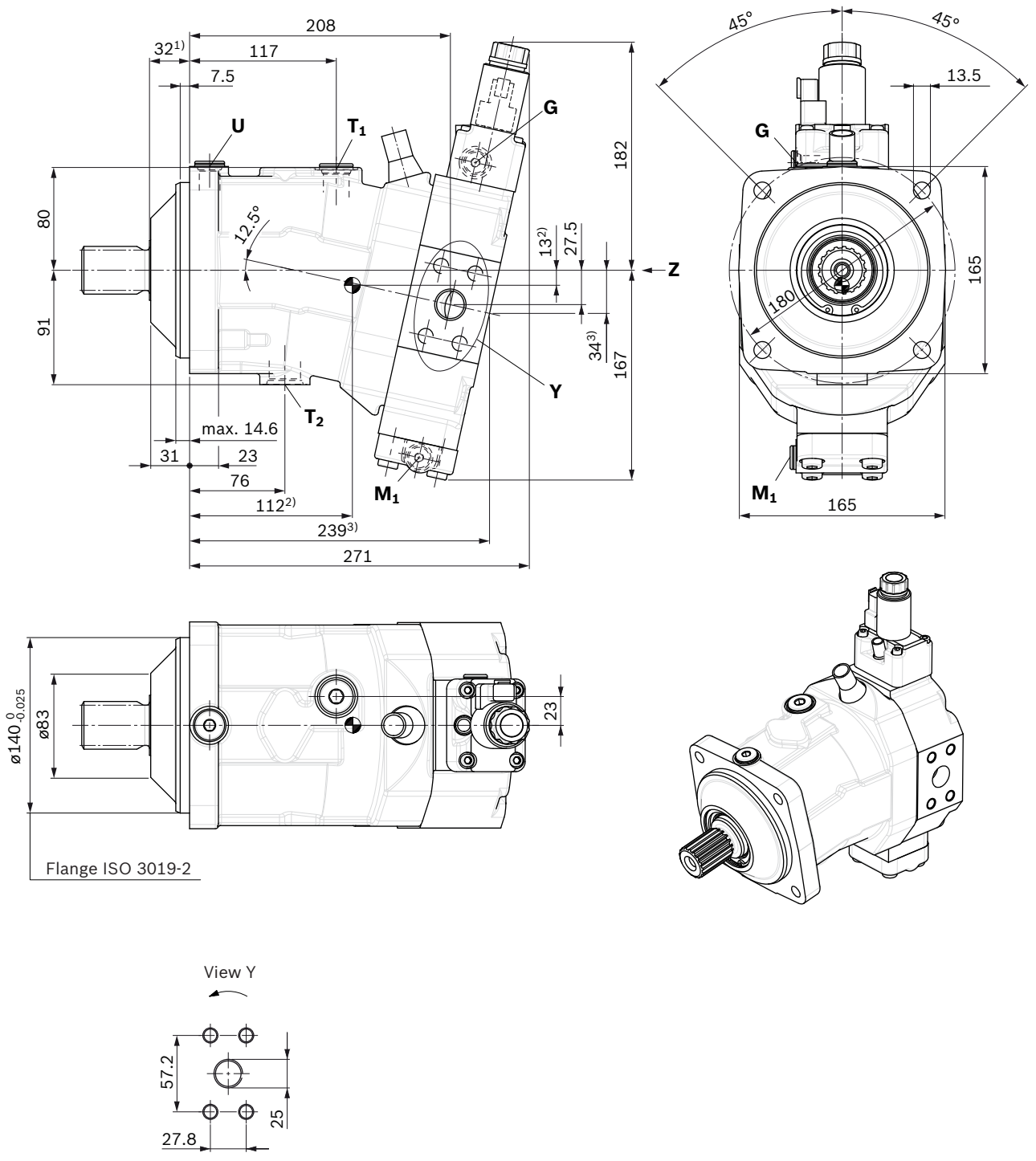

Center of gravity

1) To shaft collar

2) Port plate 1 — SAE working port **A** and **B** at rear

▼ **Location of the service line ports on the port plates** (view **Z**)

2 SAE working port
A and **B** at side, opposite

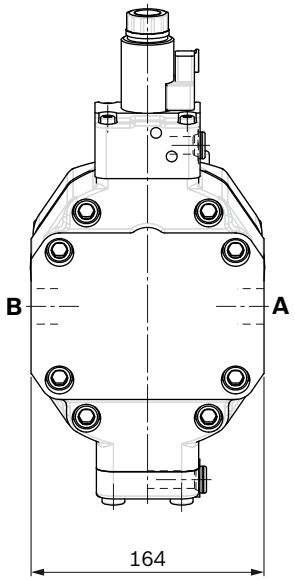

1 SAE working port
A and **B** at rear

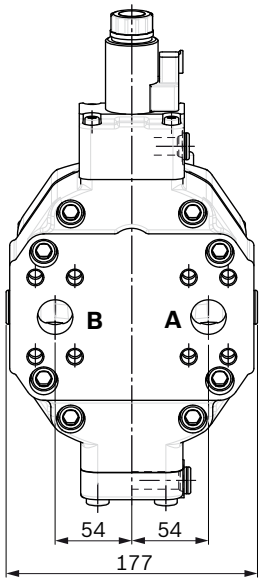

2 SAE working port
A and **B** at side, opposite
only HZ7, EZ7/8

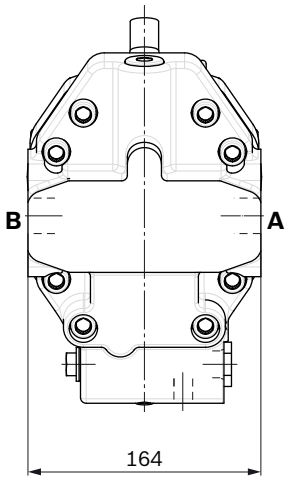

1 SAE working port
A and **B** at rear
only HZ7, EZ7/8

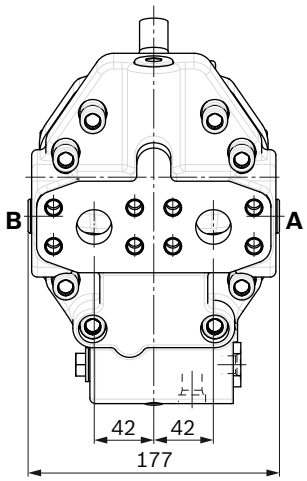

▼ **Splined shaft SAE J744**

S9 – 1 1/2 in 17T 12/24DP[1)]

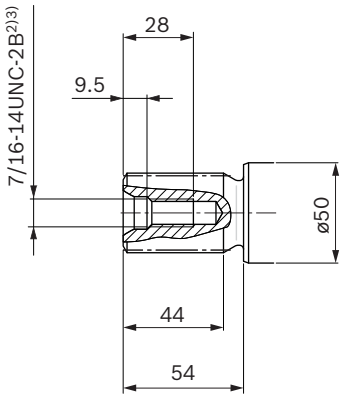

▼ **Splined shaft DIN 5480**

Z9 – W40×2×18×9g

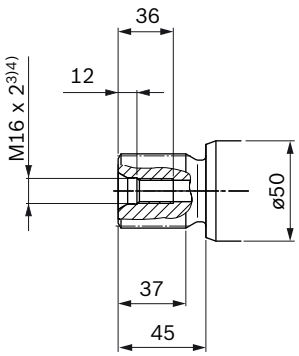

1) Involute spline acc. to ANSI B92.1a, 30° pressure angle, flat root, side fit, tolerance class 5
2) Thread according to ASME B1.1
3) For notes on tightening torques, see instruction manual
4) Center bore according to DIN 332 (thread according to DIN 13)

Ports		Standard	Size[1]	p_{max} [bar][2]	Status[6]
A, B	Working port Fastening thread A/B	SAE J518[3] DIN 13	1 in M12 × 1.75; 17 deep	500	O
T_1	Drain port	ISO 6149[5]	M22 × 1.5; 15.5 deep	3	X[4]
T_2	Drain port	ISO 6149[5]	M27 × 2; 19 deep	3	O[4]
G	Synchronous control	ISO 6149[5]	M14 × 1.5; 11.5 deep	500	X
U	Bearing flushing	ISO 6149[5]	M18 × 1.5; 14.5 deep	3	X
X	Pilot signal (HP, HZ, HA1T/HA2T)	ISO 6149[5]	M14 × 1.5; 11.5 deep	100	O
X	Pilot signal (HA1, HA2)	ISO 6149[5]	M14 × 1.5; 11.5 deep	3	X
X_1, X_2	Pilot signal (DA0)	ISO 8434-1	SDSC-L8×M12-F	40	O
X_1	Pilot signal (DA1, DA2)	ISO 6149[5]	M14 × 1.5; 11.5 deep	40	O
X_3	Pilot signal (DA1, DA2)	ISO 6149[5]	M14 × 1.5; 11.5 deep	40	X
M_1	Stroking chamber measurement	ISO 6149[5]	M14 × 1.5; 11.5 deep	500	X

1) For notes on tightening torques, see instruction manual
2) Depending on the application, momentary pressure peaks can occur.
3) Keep this in mind when selecting measuring devices and fittings.
4) Only dimensions according to SAE J518, metric fastening thread is a deviation from standard.
5) Depending on installation position, **T_1** or **T_2** must be connected (see also installation instructions on page 72).
6) The countersink can be deeper than as specified in the standard.
7) O = Must be connected (plugged on delivery)
X = Plugged (in normal operation)

▼ **EP1, EP2** – Electric proportional control, positive control

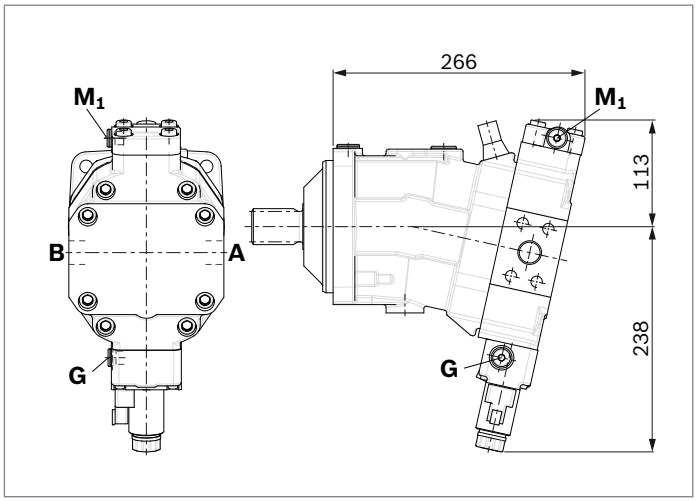

▼ **EP5D1, EP6D1** – Electric proportional control, negative control, with pressure control, fixed

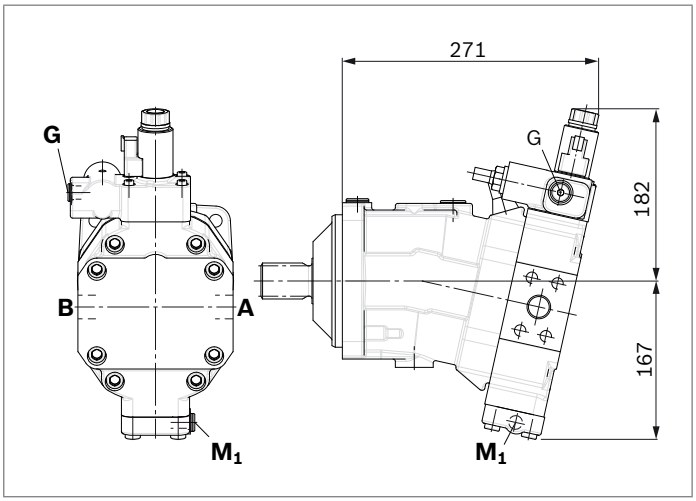

▼ **HP1, HP2** – Hydraulic proportional control, positive control

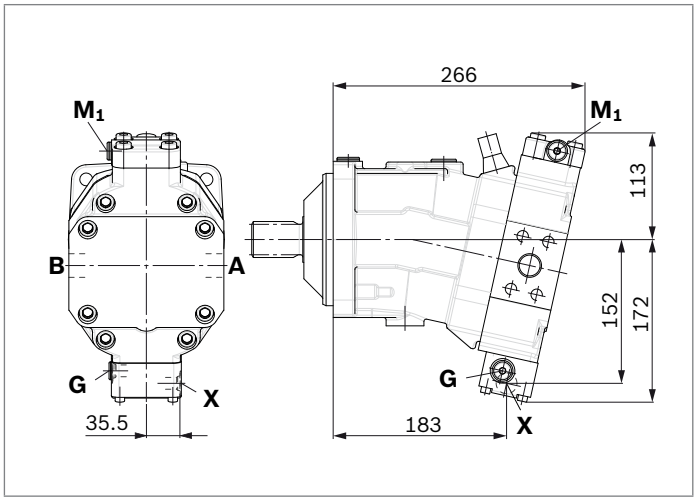

▼ **HP5, HP6** – Hydraulic proportional control, negative control

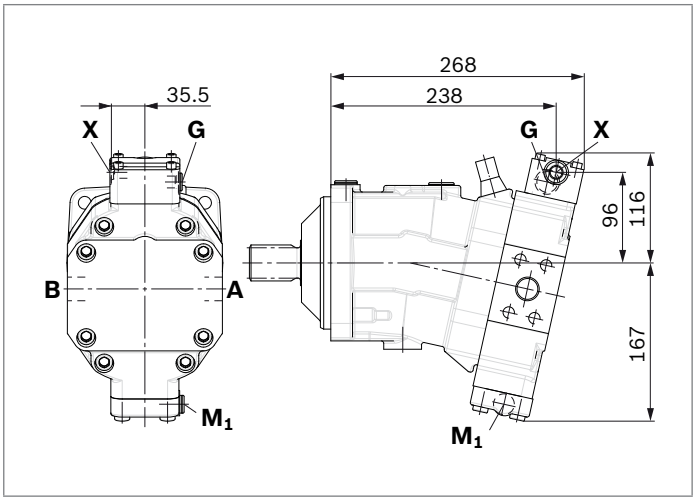

▼ **HP5D1, HP6D1** – Hydraulic proportional control, negative control, with pressure control, fixed

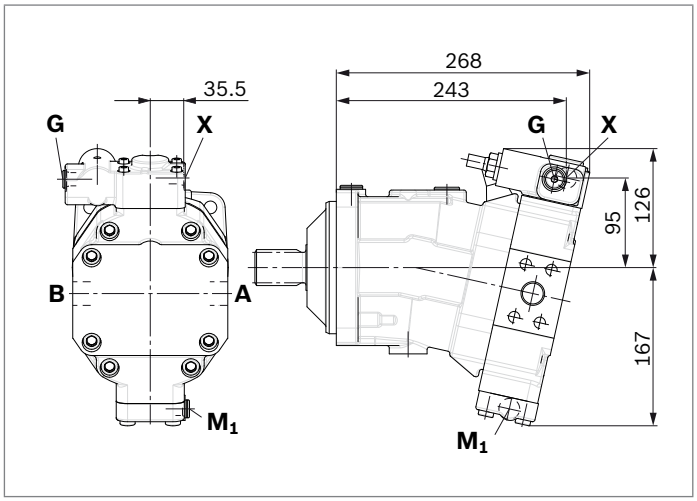

▼ **HZ7** – Hydraulic two-point control, negative control

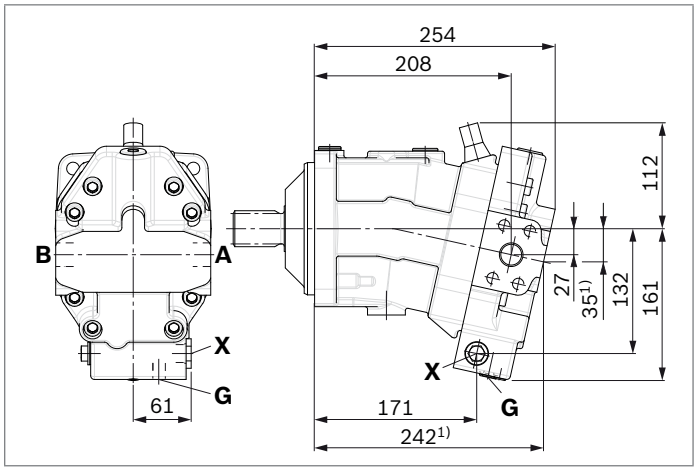

▼ **EZ7, EZ8** – Electric two-point control, negative control

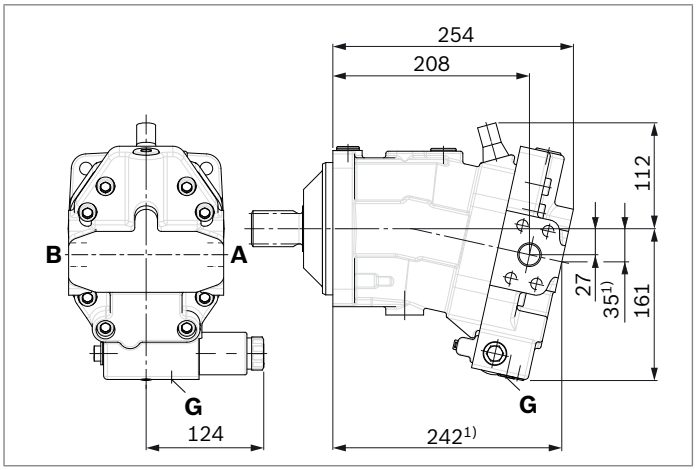

▼ **HA1, HA2 / HA1T3, HA2T3** – Automatic high-pressure-related control, positive control, with override hydraulic remote controlled, proportional

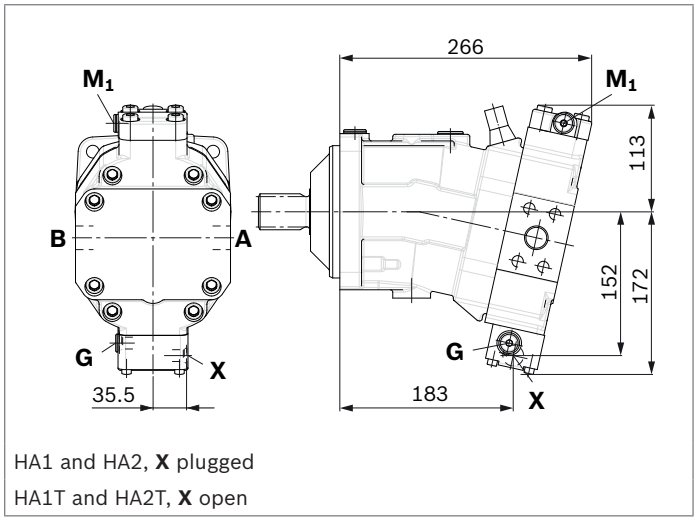

HA1 and HA2, **X** plugged
HA1T and HA2T, **X** open

▼ **HA1U1, HA2U2** – Automatic high-pressure-related control, positive control, with override, electric, two-point

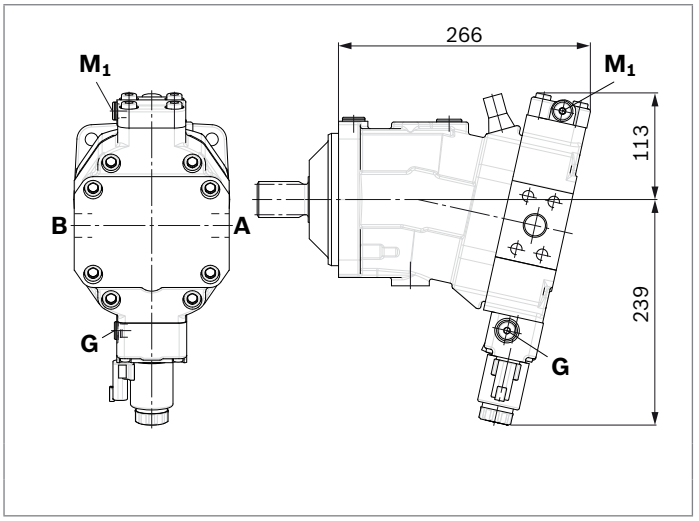

▼ **HA1R1, HA2R2** – Automatic high-pressure-related control, positive control, with override, electric and travel direction valve, electric

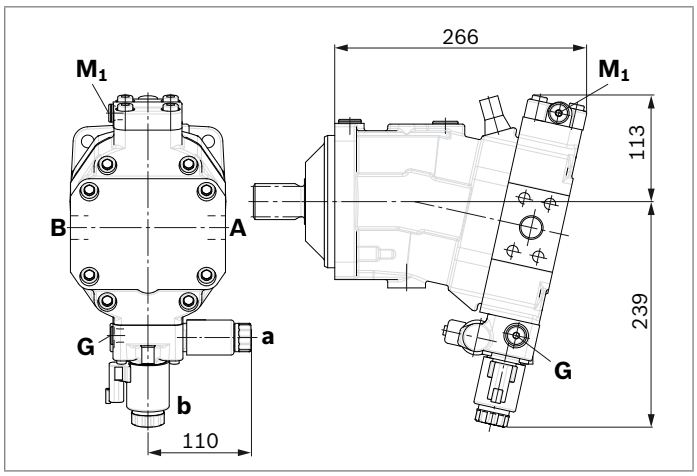

1) Port plate 1 – SAE working port **A** and **B** at rear

▼ **DA0** – Automatic speed-related control, negative control, with hydraulic travel direction valve

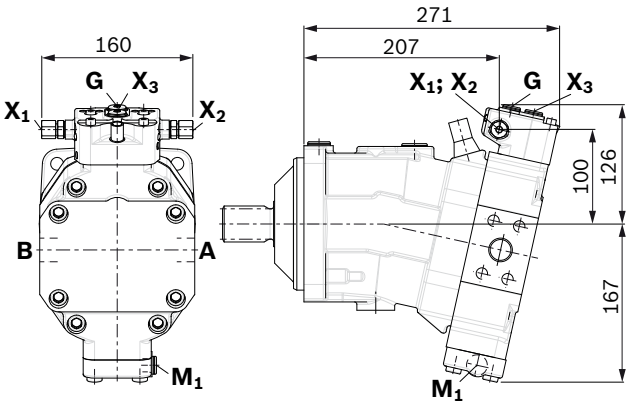

X$_1$, **X**$_2$ pipe fitting SDSC – L8×M12 – F according to ISO 8434-1

Use assembled fitting!

▼ **DA1, DA2** – Automatic speed-related control, negative control, with electric travel direction valve and electric $V_{g\,max}$ circuit

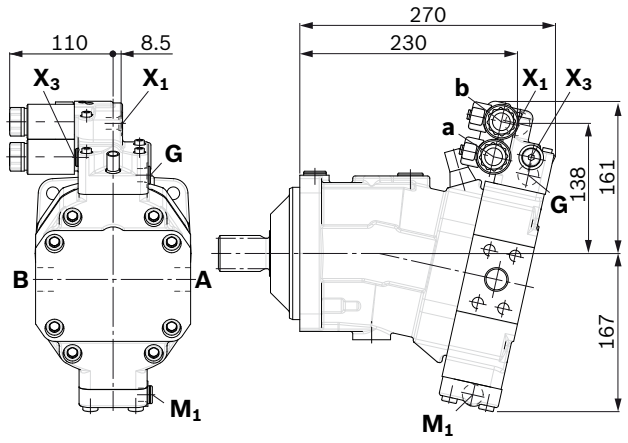

Dimensions size 115

EP5, EP6 – Proportional electric control, negative control

Port plate 2 — SAE working port **A** and **B** at side, opposite

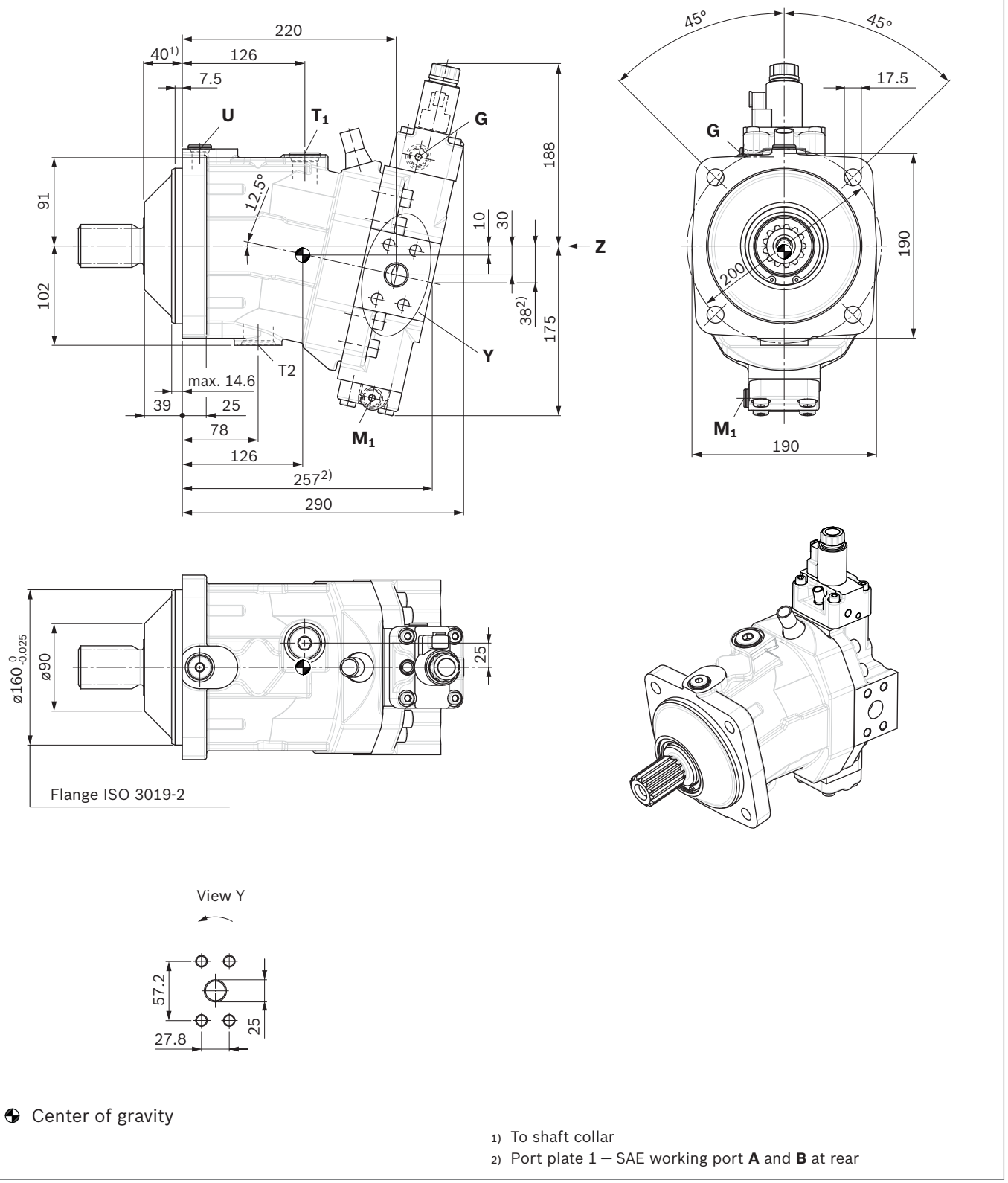

Center of gravity

1) To shaft collar

2) Port plate 1 — SAE working port **A** and **B** at rear

▼ **Location of the service line ports on the port plates** (view **Z**)

2 SAE working port **A** and **B** at side, opposite

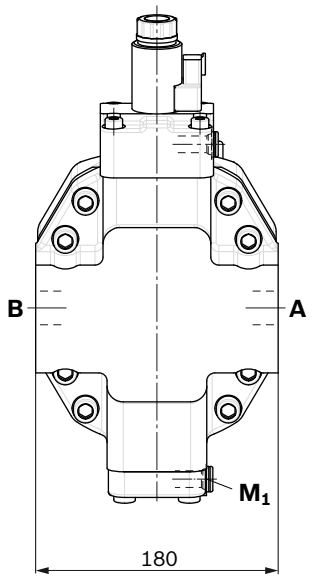

1 SAE working port **A** and **B** at rear

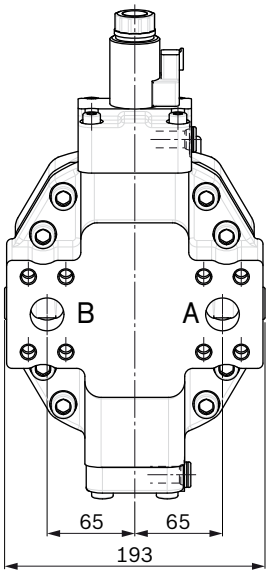

2 SAE working port **A** and **B** at side, opposite only HZ7, EZ7/8

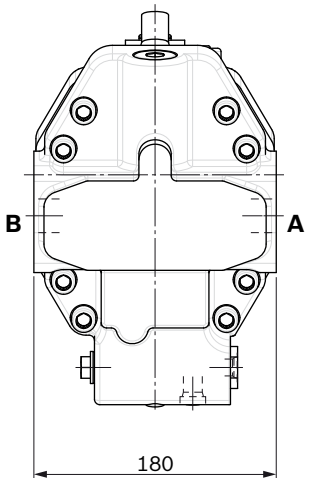

1 SAE working port **A** and **B** at rear only HZ7, EZ7/8

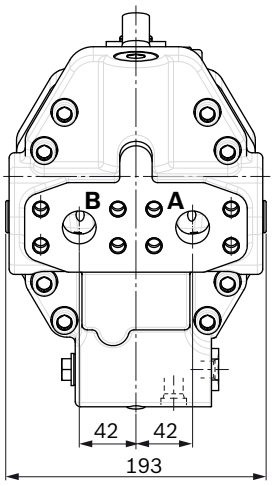

▼ **Splined shaft SAE J744**

T1 – 1 3/4 in 13T 8/13DP[1)]

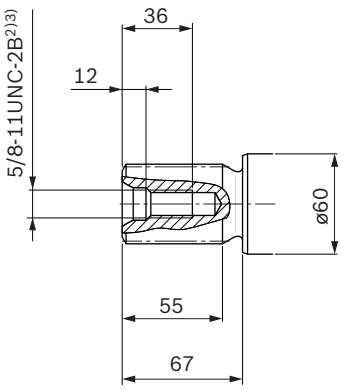

▼ **Splined shaft DIN 5480**

Z9 – W40×2×18×9g

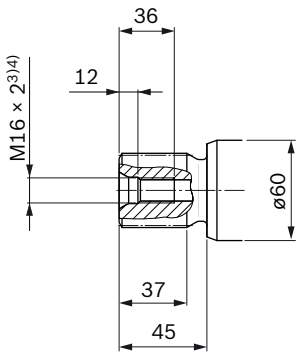

1) Involute spline acc. to ANSI B92.1a, 30° pressure angle, flat root, side fit, tolerance class 5
2) Thread according to ASME B1.1
3) For notes on tightening torques, see instruction manual
4) Center bore according to DIN 332 (thread according to DIN 13)

RE 91 210/06.2012, Bosch Rexroth AG

Ports		Standard	Size[1]	p_{max} [bar][2]	Status[6]
A, B	Working port Fastening thread A/B	SAE J518[3] DIN 13	1 in M12 × 1.75; 17 deep	500	O
T_1	Drain port	ISO 6149[5]	M27 × 2; 19 deep	3	X[4]
T_2	Drain port	ISO 6149[5]	M33 × 2; 19 deep	3	O[4]
G	Synchronous control	ISO 6149[5]	M14 × 1.5; 11.5 deep	500	X
U	Bearing flushing	ISO 6149[5]	M18 × 1.5; 14.5 deep	3	X
X	Pilot signal (HP, HZ, HA1T/HA2T)	ISO 6149[5]	M14 × 1.5; 11.5 deep	100	O
X	Pilot signal (HA1, HA2)	ISO 6149[5]	M14 × 1.5; 11.5 deep	3	X
X_1, X_2	Pilot signal (DA0)	ISO 8434-1	SDSC-L8×M12-F	40	O
X_1	Pilot signal (DA1, DA2)	ISO 6149[5]	M14 × 1.5; 11.5 deep	40	O
X_3	Pilot signal (DA1, DA2)	ISO 6149[5]	M14 × 1.5; 11.5 deep	40	X
M_1	Stroking chamber measurement	ISO 6149[5]	M14 × 1.5; 11.5 deep	500	X

1) For notes on tightening torques, see instruction manual
2) Depending on the application, momentary pressure peaks can occur.
3) Keep this in mind when selecting measuring devices and fittings.
4) Only dimensions according to SAE J518, metric fastening thread is a deviation from standard.
5) Depending on installation position, **T_1** or **T_2** must be connected (see also installation instructions on page 72).
6) The countersink can be deeper than as specified in the standard.
7) O = Must be connected (plugged on delivery)
X = Plugged (in normal operation)

▼ **EP1, EP2** – Electric proportional control, positive control

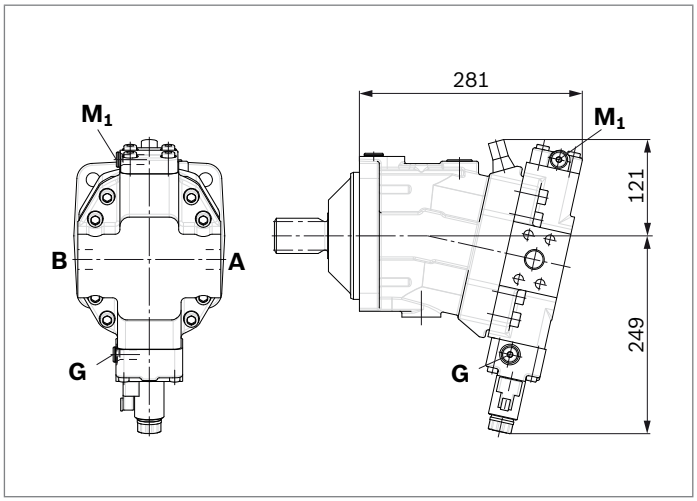

▼ **EP5D1, EP6D1** – Electric proportional control, negative control, with pressure control, fixed

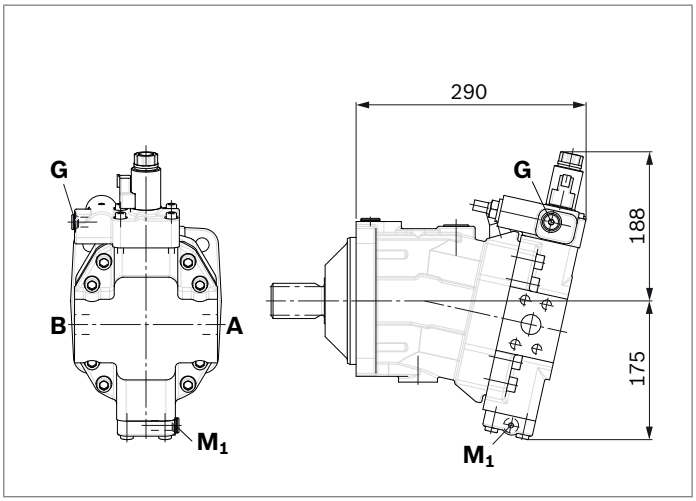

▼ **HP1, HP2** – Hydraulic proportional control, positive control

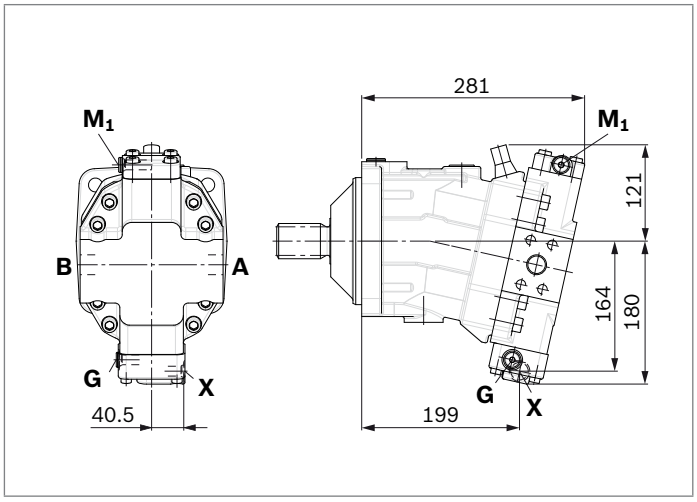

▼ **HP5, HP6** – Hydraulic proportional control, negative control

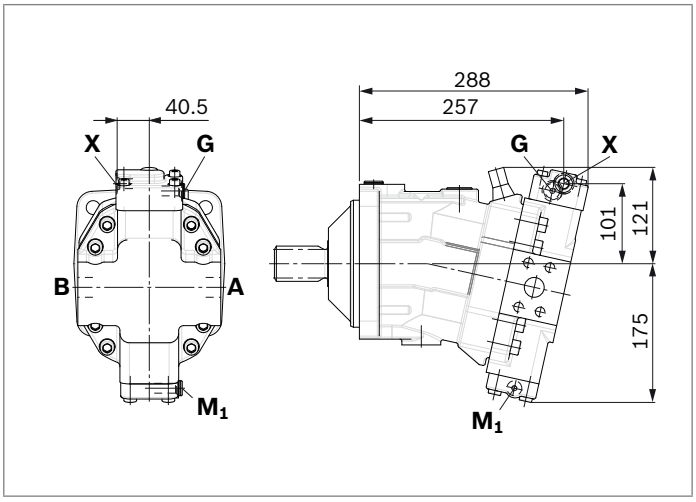

▼ **HP5D1, HP6D1** – Hydraulic proportional control, negative control, with pressure control, fixed

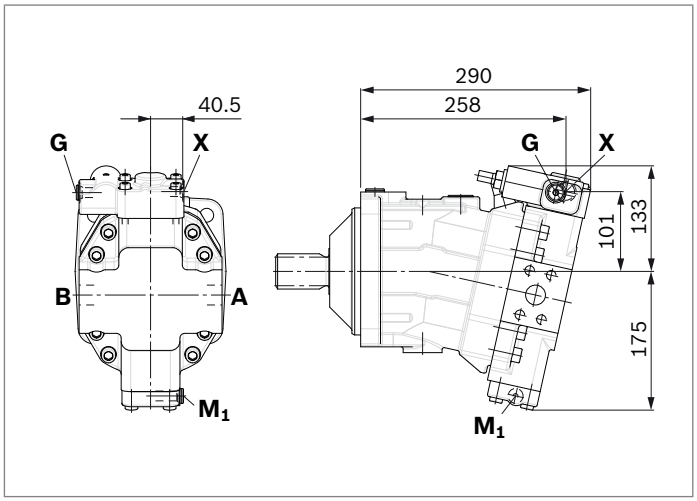

RE 91010/06.2016, Bosch Rexroth AG

405

▼ **HZ7** – Hydraulic two-point control, negative control

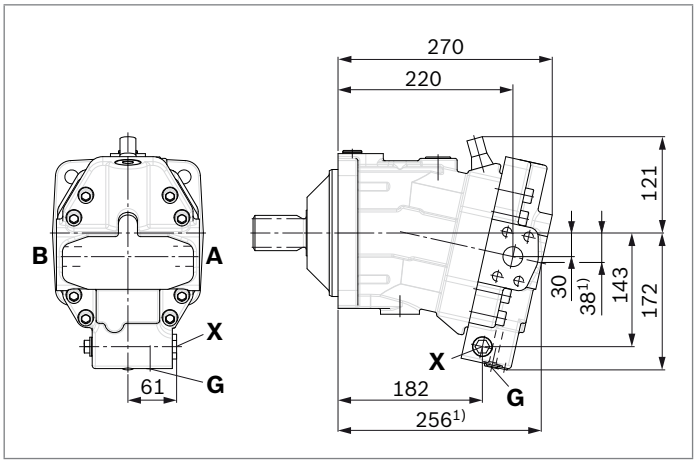

▼ **EZ7, EZ8** – Electric two-point control, negative control

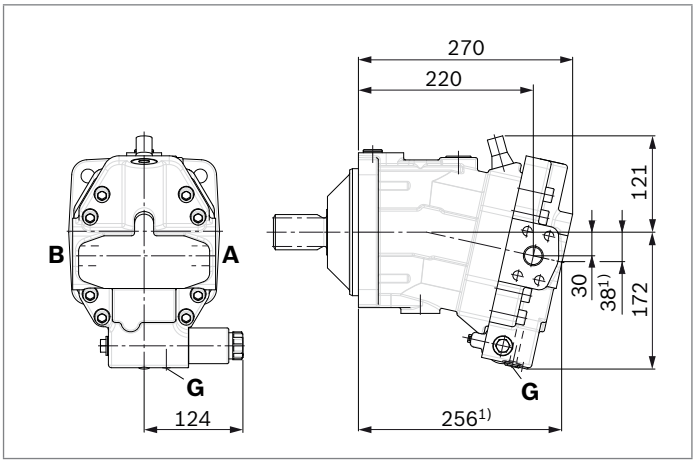

▼ **HA1, HA2 / HA1T3, HA2T3** – Automatic high-pressure-related control, positive control, with override hydraulic remote controlled, proportional

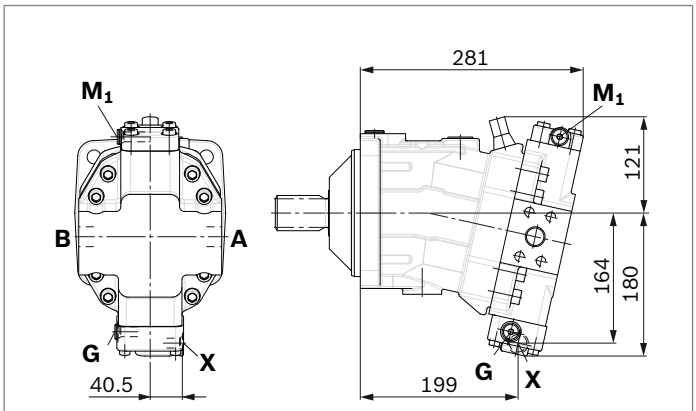

HA1 and HA2, **X** plugged

HA1T and HA2T, **X** open

▼ **HA1U1, HA2U2** – Automatic high-pressure-related control, positive control, with override, electric, two-point

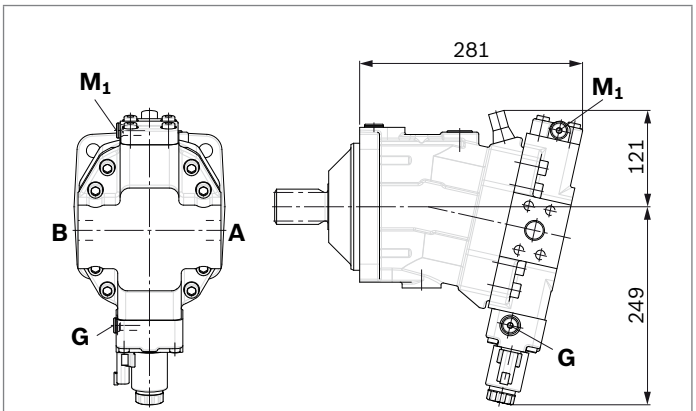

▼ **HA1R1, HA2R2** – Automatic high-pressure-related control, positive control, with override, electric and travel direction valve, electric

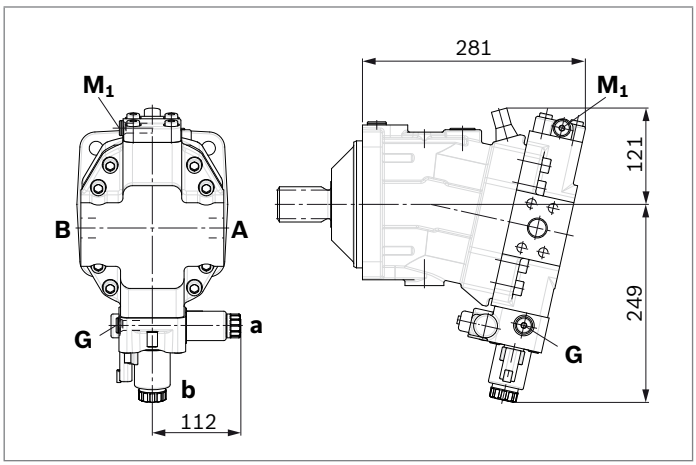

1) Port plate 1 – SAE working port **A** and **B** at rear

▼ **DA0** – Automatic speed-related control, negative control, with hydraulic travel direction valve

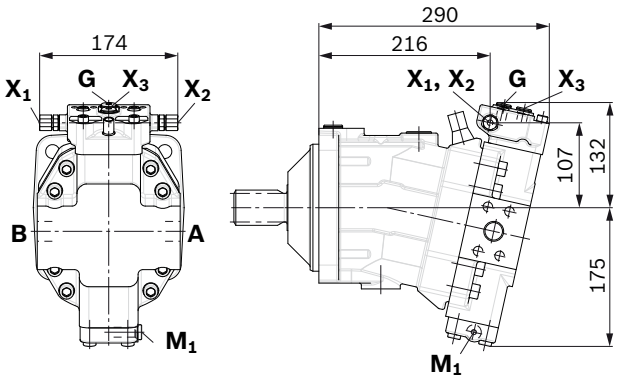

X$_1$, **X**$_2$ pipe fitting SDSC – L8×M12 – F according to ISO 8434-1
Use assembled fitting!

▼ **DA1, DA2** – Automatic speed-related control, negative control, with electric travel direction valve and electric $V_{g\,max}$ circuit

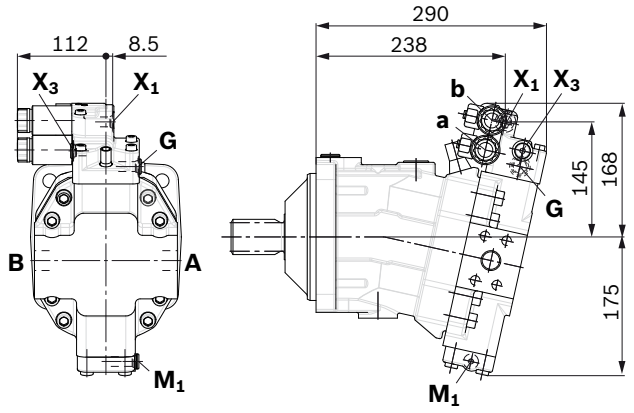

Dimensions size 150

EP5, EP6 – Proportional electric control, negative control

Port plate 2 — SAE working port **A** and **B** at side, opposite

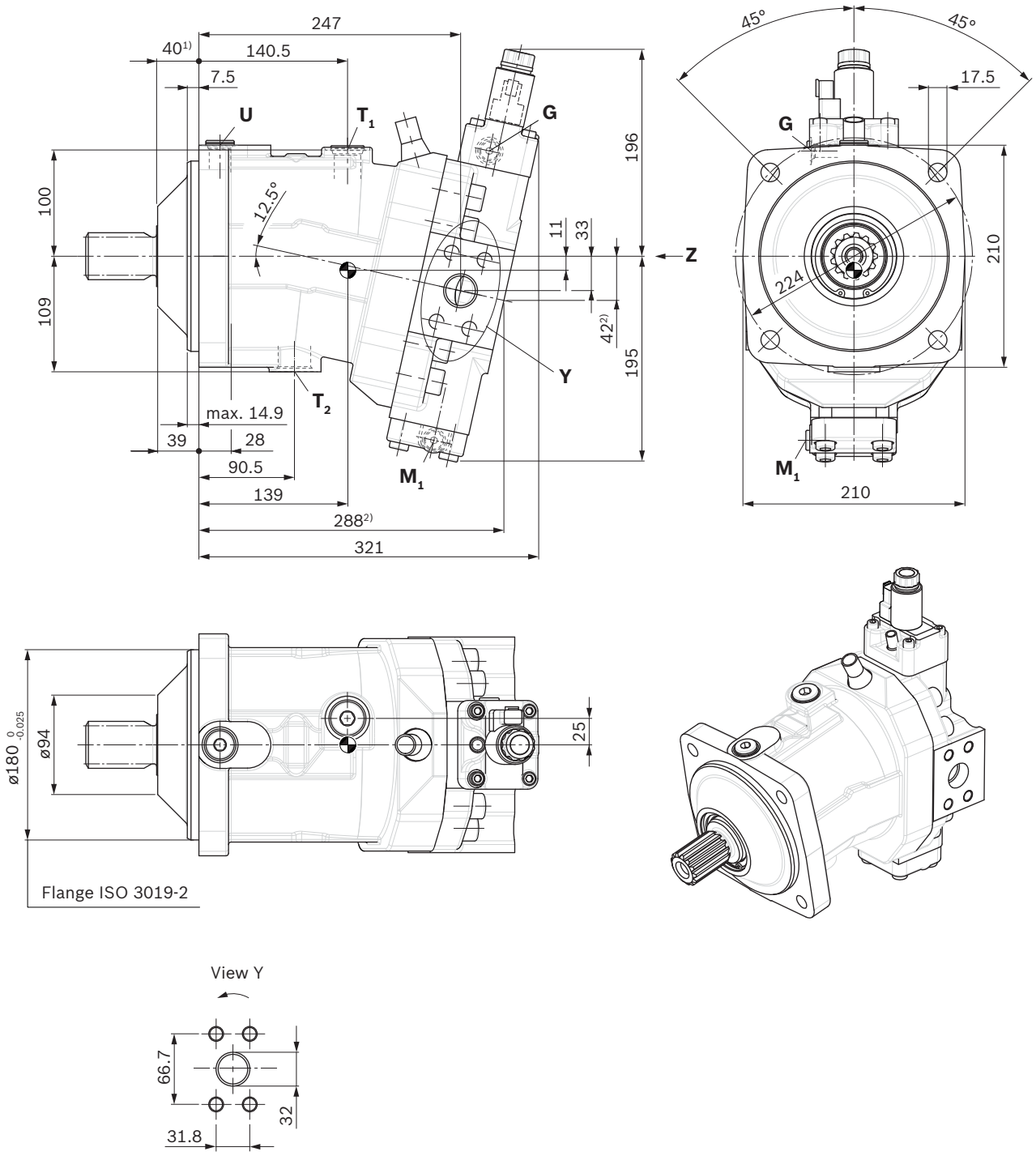

Center of gravity

1) To shaft collar

2) Port plate 1 — SAE working port **A** and **B** at rear

▼ **Location of the service line ports on the port plates** (view **Z**)

2 SAE working port
A and **B** at side, opposite

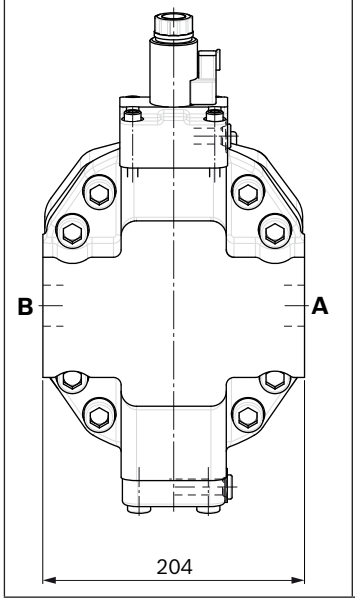

1 SAE working port
A and **B** at rear

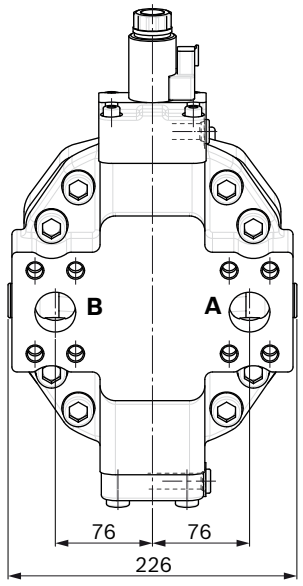

▼ **Splined shaft SAE J744**

T1 – 1 3/4 in 13T 8/16DP[1)]

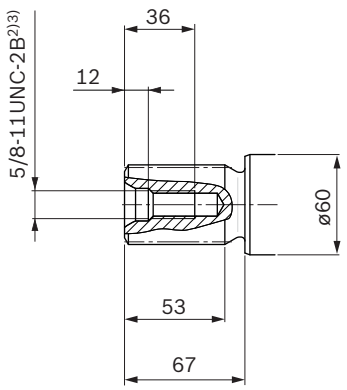

▼ **Splined shaft SAE J744**

T2 – 2 in 15T 8/16DP[1)]

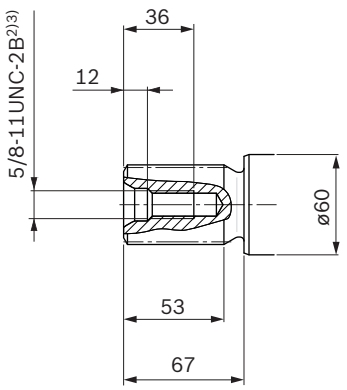

▼ **Splined shaft DIN 5480**

A1 – W45×2×21×9g

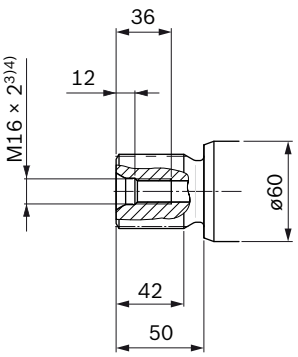

1) Involute spline acc. to ANSI B92.1a, 30° pressure angle, flat root, side fit, tolerance class 5
2) Thread according to ASME B1.1
3) For notes on tightening torques, see instruction manual
4) Center bore according to DIN 332 (thread according to DIN 13)

Ports		Standard	Size[1]	p_{max} [bar][2]	Status[6]
A, B	Working port Fastening thread A/B	SAE J518[3] DIN 13	1 1/4 in M14 × 2; 19 deep	500	O
T_1	Drain port	ISO 6149[5]	M27 × 2; 19 deep	3	X[4]
T_2	Drain port	ISO 6149[5]	M33 × 2; 19 deep	3	O[4]
G	Synchronous control	ISO 6149[5]	M14 × 1.5; 11.5 deep	500	X
U	Bearing flushing	ISO 6149[5]	M22 × 1.5; 15.5 deep	3	X
X	Pilot signal (HP, HZ, HA1T/HA2T)	ISO 6149[5]	M14 × 1.5; 11.5 deep	100	O
X	Pilot signal (HA1, HA2)	ISO 6149[5]	M14 × 1.5; 11.5 deep	3	X
X_1, X_2	Pilot signal (DA0)	ISO 8434-1	SDSC-L8×M12-F	40	O
X_1	Pilot signal (DA1, DA2)	ISO 6149[5]	M14 × 1.5; 11.5 deep	40	O
X_3	Pilot signal (DA1, DA2)	ISO 6149[5]	M14 × 1.5; 11.5 deep	40	X
M_1	Stroking chamber measurement	ISO 6149[5]	M14 × 1.5; 11.5 deep	500	X

1) For notes on tightening torques, see instruction manual
2) Depending on the application, momentary pressure peaks can occur.
3) Keep this in mind when selecting measuring devices and fittings.
4) Only dimensions according to SAE J518, metric fastening thread is a deviation from standard.
5) Depending on installation position, **T_1** or **T_2** must be connected (see also installation instructions on page 72).
6) The countersink can be deeper than as specified in the standard.
7) O = Must be connected (plugged on delivery)
X = Plugged (in normal operation)

▼ **EP1, EP2** – Electric proportional control, positive control

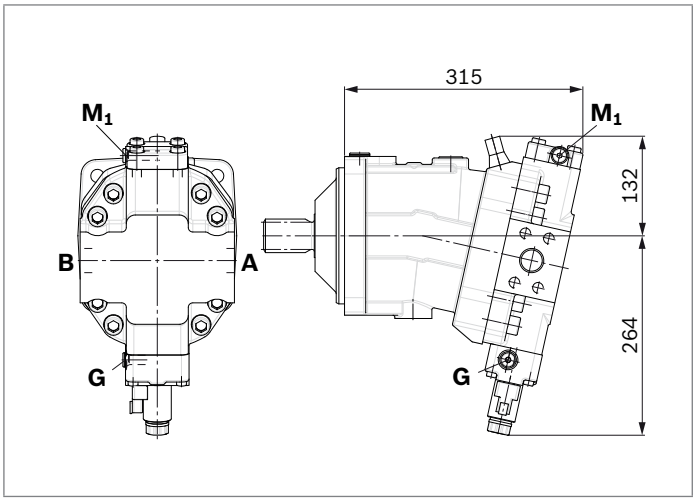

▼ **EP5D1, EP6D1** – Electric proportional control, negative control, with pressure control, fixed

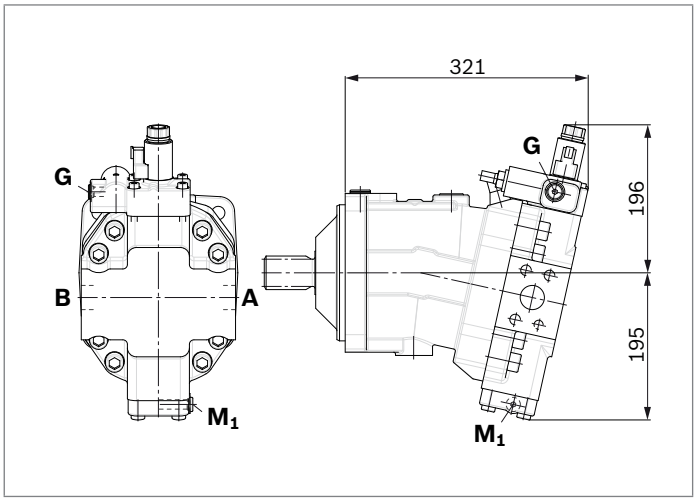

▼ **HP1, HP2** – Hydraulic proportional control, positive control

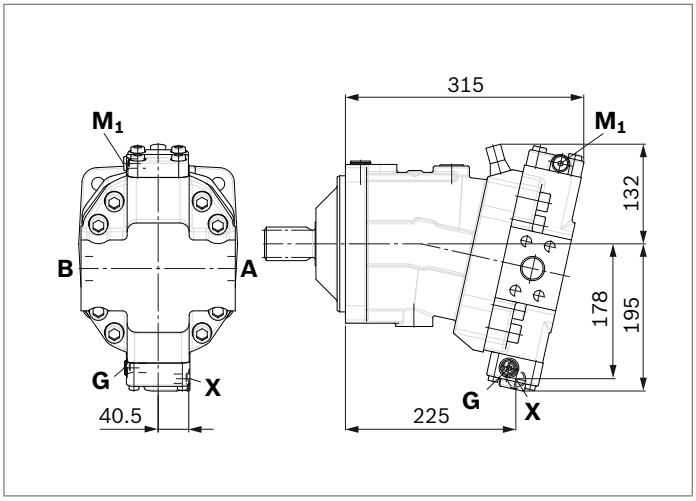

▼ **HP5, HP6** – Hydraulic proportional control, negative control

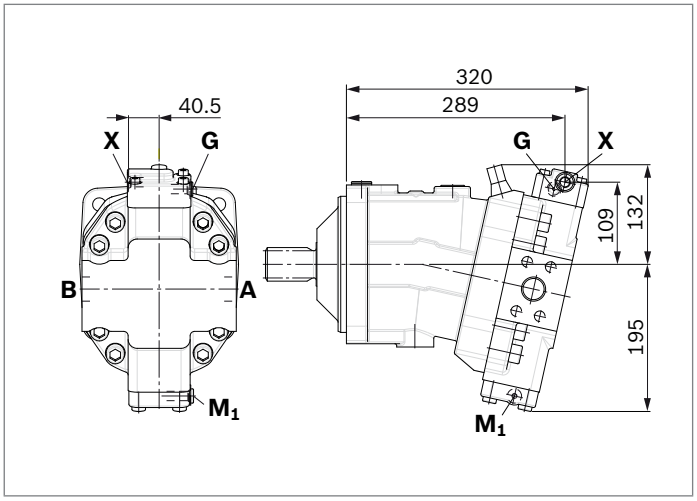

▼ **HP5D1, HP6D1** – Hydraulic proportional control, negative control, with pressure control, fixed

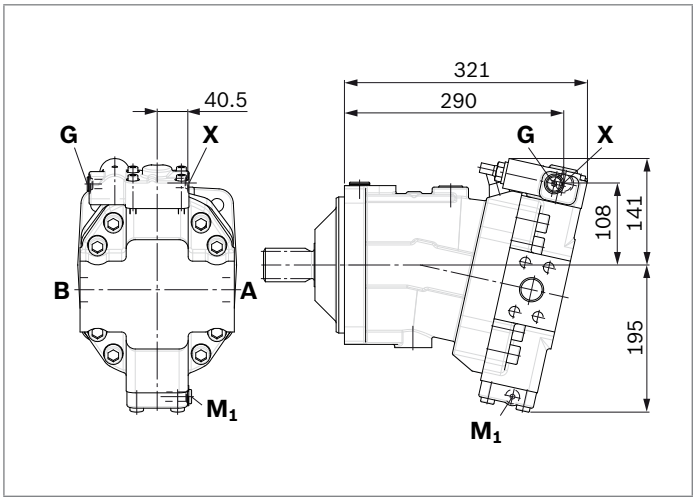

3

▼ **HZ5** – Hydraulic two-point control, negative control

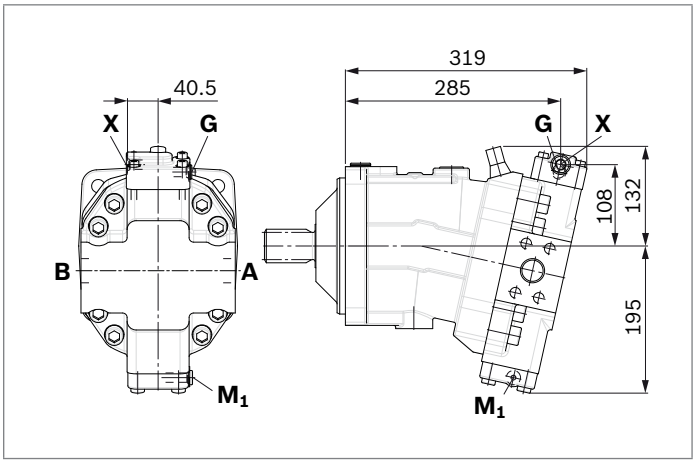

▼ **EZ5, EZ6** – Electric two-point control, negative control

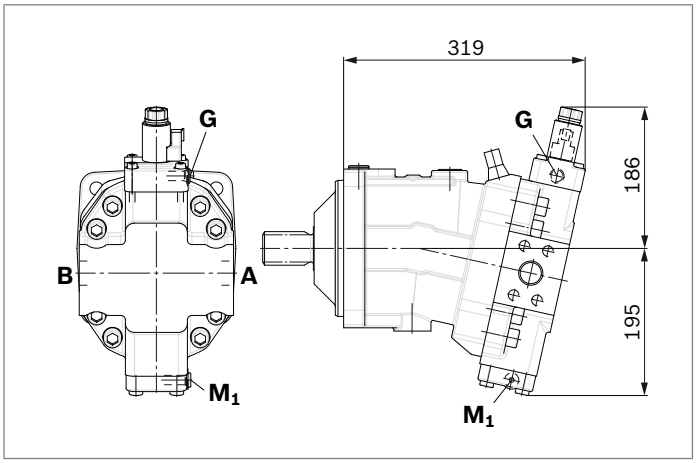

▼ **HA1, HA2 / HA1T3, HA2T3** – Automatic high-pressure-related control, positive control, with override hydraulic remote controlled, proportional

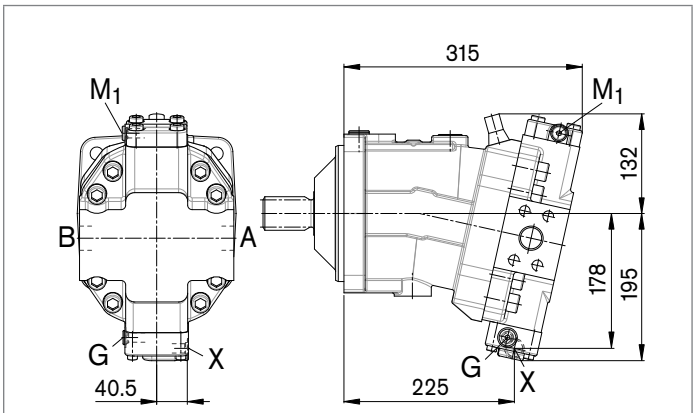

HA1 and HA2, **X** plugged

HA1T and HA2T, **X** open

▼ **HA1U1, HA2U2** – Automatic high-pressure-related control, positive control, with override, electric, two-point

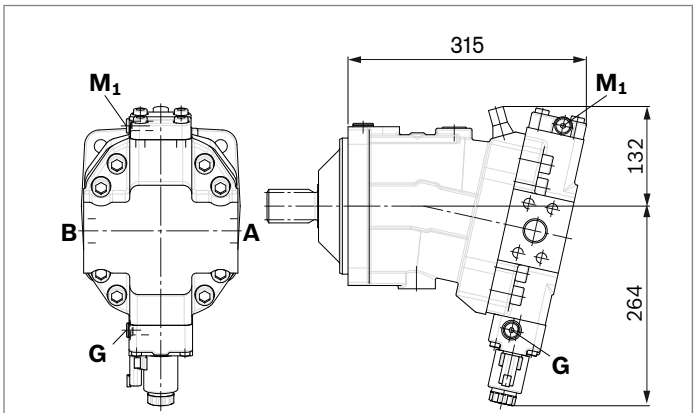

▼ **HA1R1, HA2R2** – Automatic high-pressure-related control, positive control, with override, electric and travel direction valve, electric

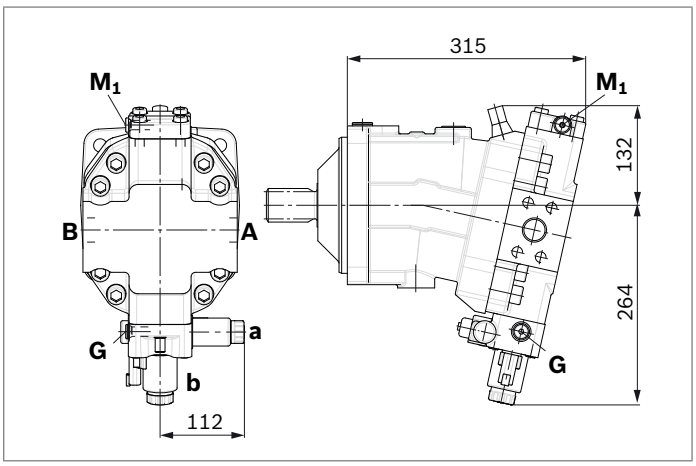

▼ **DA0** – Automatic speed-related control, negative control, with hydraulic travel direction valve

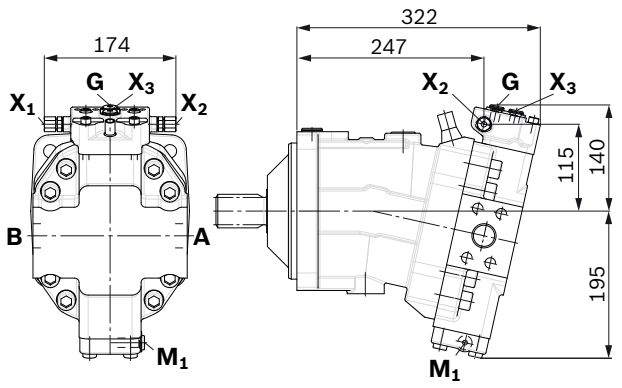

X$_1$, **X**$_2$ pipe fitting SDSC – L8×M12 – F according to ISO 8434-1

Use assembled fitting!

▼ **DA1, DA2** – Automatic speed-related control, negative control, with electric travel direction valve and electric $V_{g\,max}$ circuit

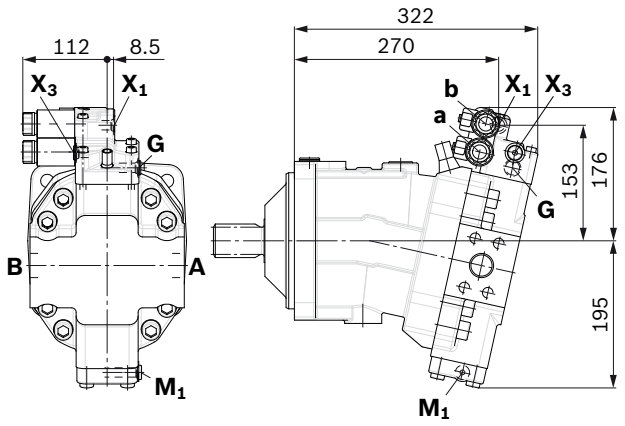

Dimensions size 170

EP5, EP6 – Proportional electric control, negative control

Port plate 2 — SAE working port **A** and **B** at side, opposite

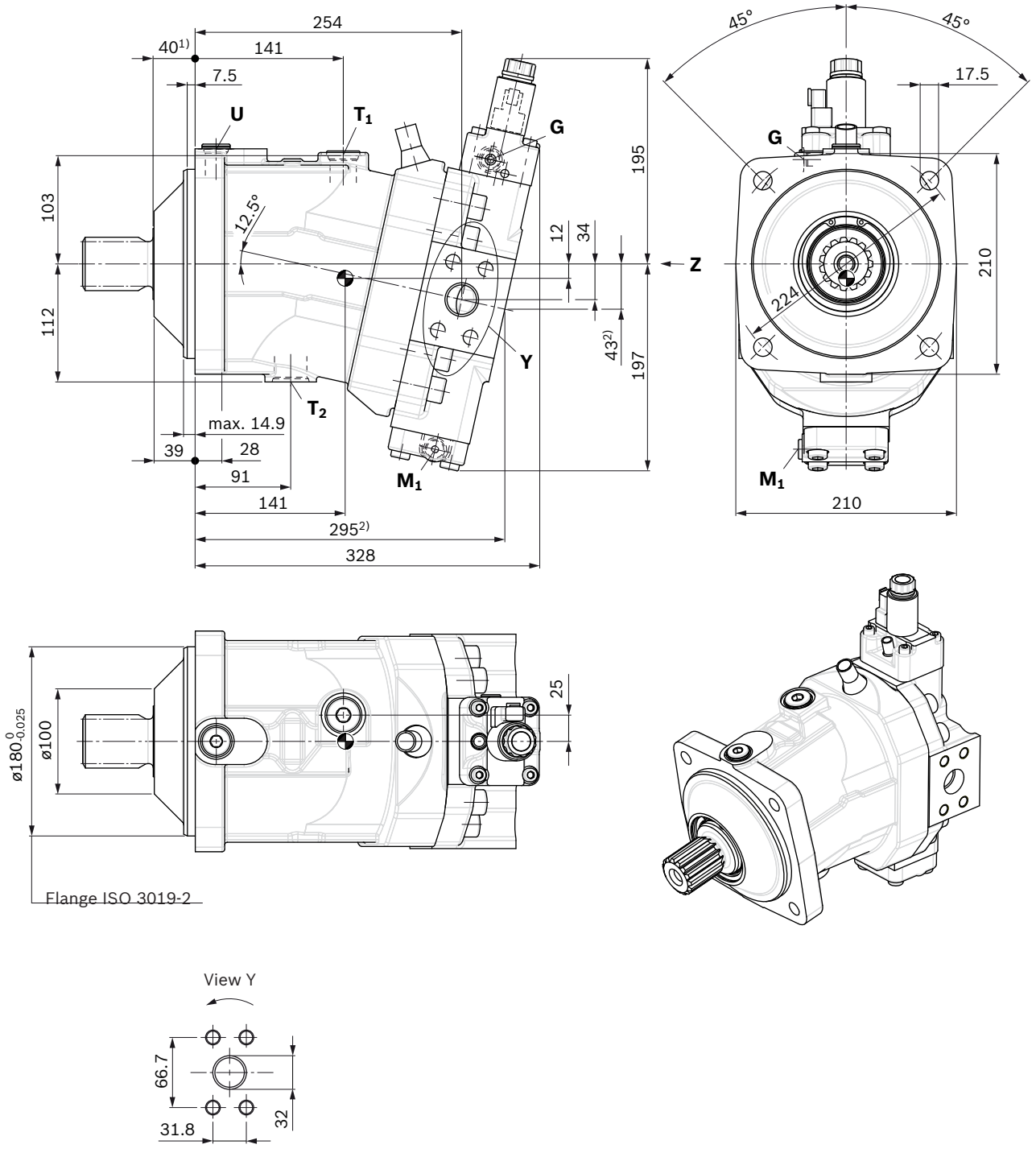

Center of gravity

1) To shaft collar

2) Port plate 1 — SAE working port **A** and **B** at rear

▼ **Location of the service line ports on the port plates** (view **Z**)

2 SAE working port **A** and **B** at side, opposite

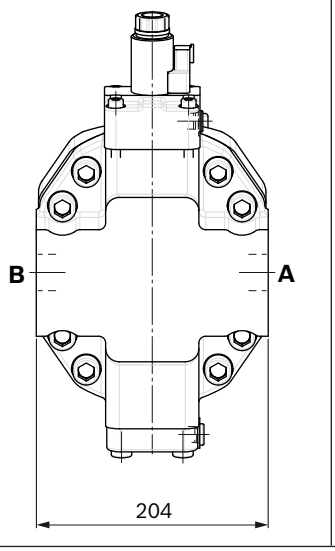

1 SAE working port **A** and **B** at rear

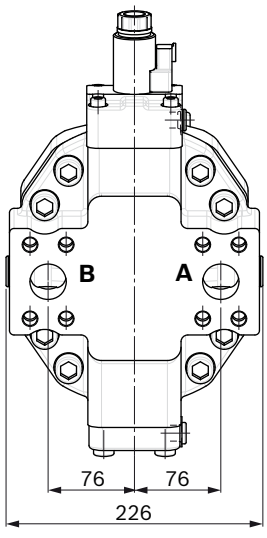

▼ **Splined shaft SAE J744**

T2 – 2 in 15T 8/16DP[1)]

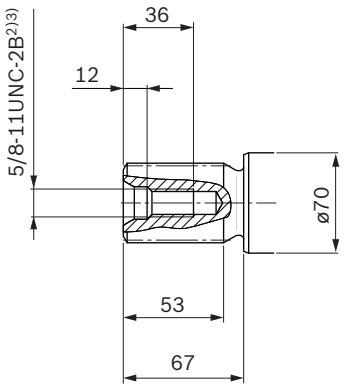

▼ **Splined shaft DIN 5480**

A1 – W45×2×21×9g

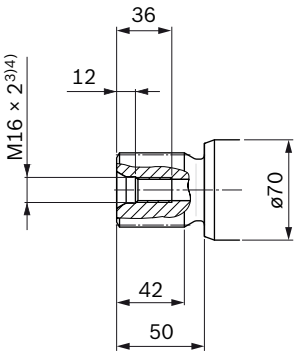

1) Involute spline acc. to ANSI B92.1a, 30° pressure angle, flat root, side fit, tolerance class 5
2) Thread according to ASME B1.1
3) For notes on tightening torques, see instruction manual
4) Center bore according to DIN 332 (thread according to DIN 13)

R_91_10_06_2012, Bosch Rexroth AG

Ports		Standard	Size[1]	p_{max} [bar][2]	Status[6]
A, B	Working port Fastening thread A/B	SAE J518[3] DIN 13	1 1/4 in M14 × 2; 19 deep	500	O
T_1	Drain port	ISO 6149[5]	M27 × 2; 19 deep	3	X[4]
T_2	Drain port	ISO 6149[5]	M33 × 2; 19 deep	3	O[4]
G	Synchronous control	ISO 6149[5]	M14 × 1.5; 11.5 deep	500	X
U	Bearing flushing	ISO 6149[5]	M22 × 1.5; 15.5 deep	3	X
X	Pilot signal (HP, HZ, HA1T/HA2T)	ISO 6149[5]	M14 × 1.5; 11.5 deep	100	O
X	Pilot signal (HA1, HA2)	ISO 6149[5]	M14 × 1.5; 11.5 deep	3	X
X_1, X_2	Pilot signal (DA0)	ISO 8434-1	SDSC-L8×M12-F	40	O
X_1	Pilot signal (DA1, DA2)	ISO 6149[5]	M14 × 1.5; 11.5 deep	40	O
X_3	Pilot signal (DA1, DA2)	ISO 6149[5]	M14 × 1.5; 11.5 deep	40	X
M_1	Stroking chamber measurement	ISO 6149[5]	M14 × 1.5; 11.5 deep	500	X

1) For notes on tightening torques, see instruction manual
2) Depending on the application, momentary pressure peaks can occur.
3) Keep this in mind when selecting measuring devices and fittings.
4) Only dimensions according to SAE J518, metric fastening thread is a deviation from standard.
5) Depending on installation position, **T_1** or **T_2** must be connected (see also installation instructions on page 72).
6) The countersink can be deeper than as specified in the standard.
7) O = Must be connected (plugged on delivery)
X = Plugged (in normal operation)

▼ **EP1, EP2** – Electric proportional control, positive control

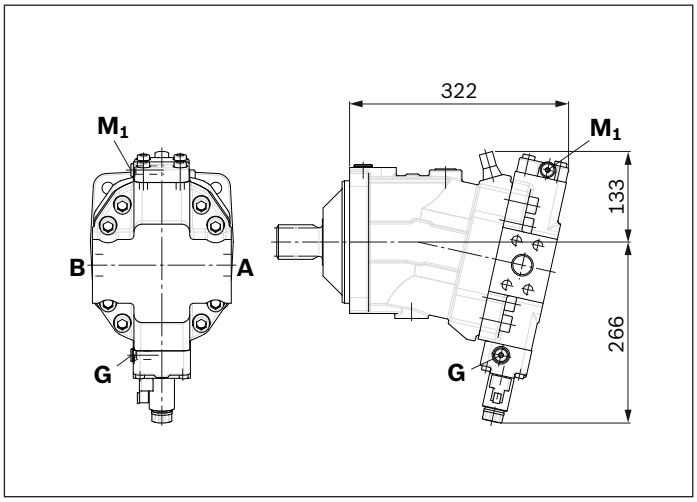

▼ **EP5D1, EP6D1** – Electric proportional control, negative control, with pressure control, fixed

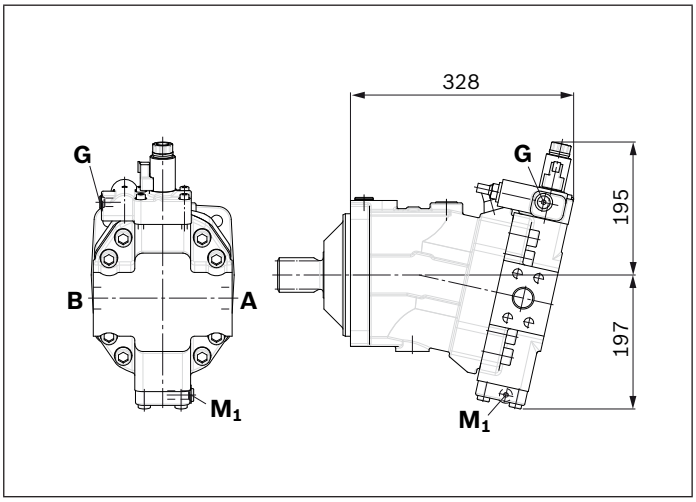

▼ **HP1, HP2** – Hydraulic proportional control, positive control

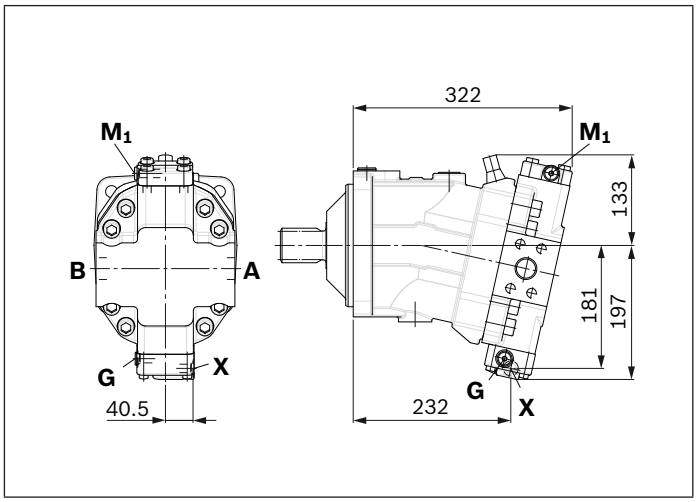

▼ **HP5, HP6** – Hydraulic proportional control, negative control

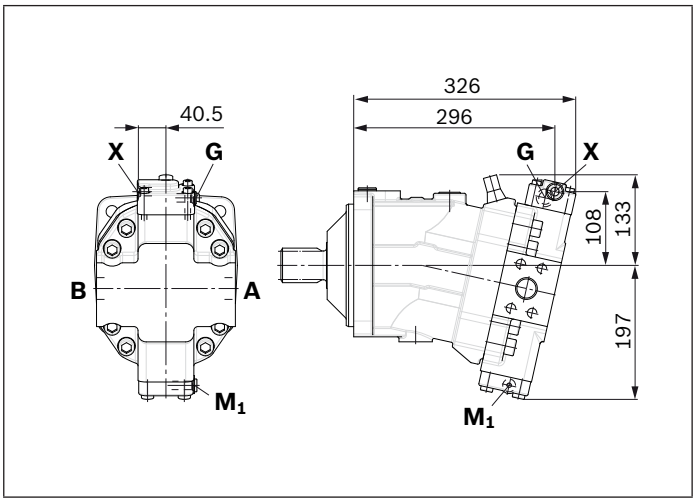

▼ **HP5D1, HP6D1** – Hydraulic proportional control, negative control, with pressure control, fixed

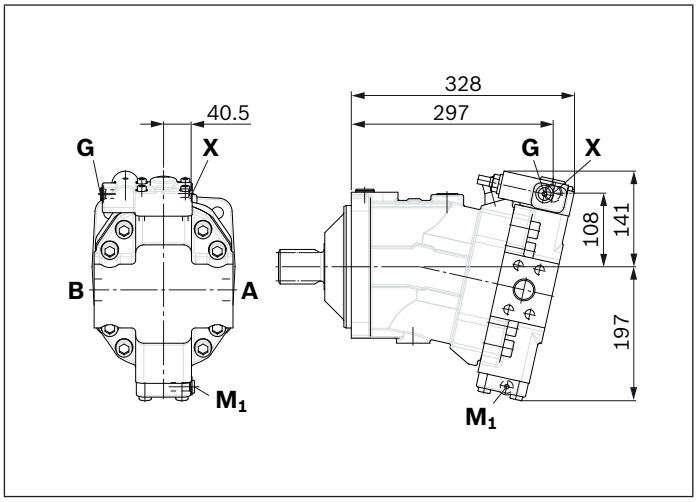

RE 91106/06.2012, Bosch Rexroth AG

▼ **HZ5** – Hydraulic two-point control, negative control

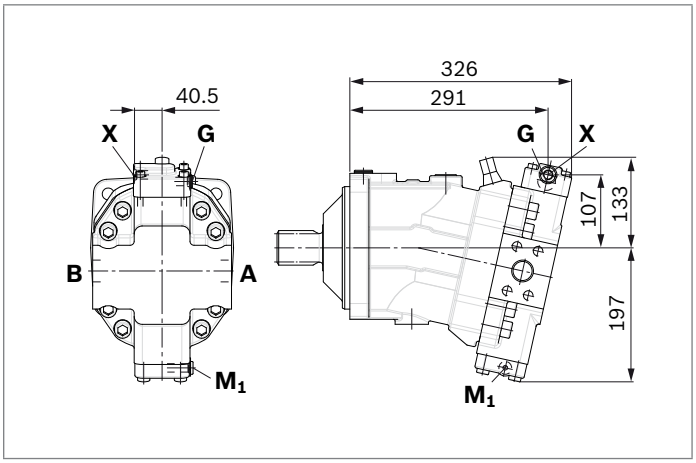

▼ **EZ5, EZ6** – Electric two-point control, negative control

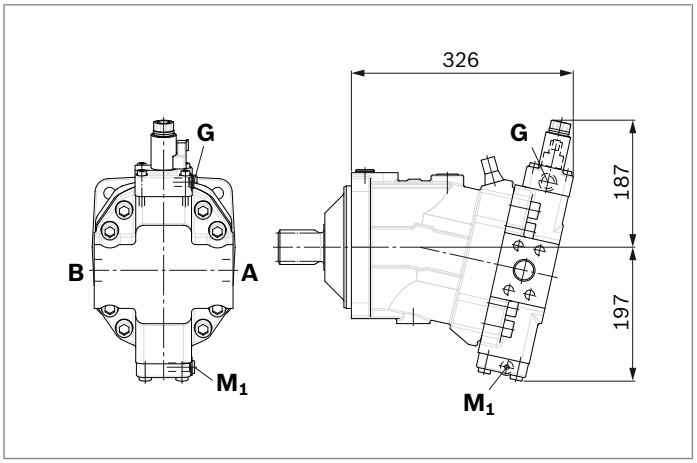

▼ **HA1, HA2 / HA1T3, HA2T3** – Automatic high-pressure-related control, positive control, with override hydraulic remote controlled, proportional

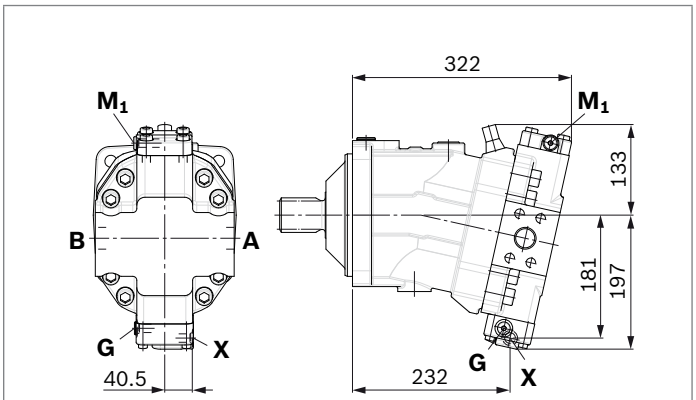

HA1 and HA2, **X** plugged

HA1T and HA2T, **X** open

▼ **HA1U1, HA2U2** – Automatic high-pressure-related control, positive control, with override, electric, two-point

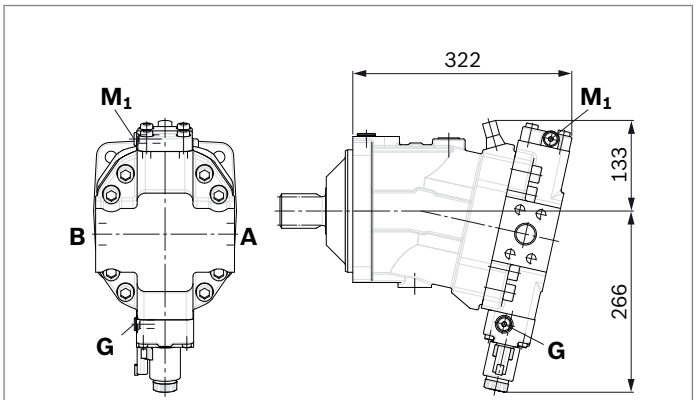

▼ **HA1R1, HA2R2** – Automatic high-pressure-related control, positive control, with override, electric and travel direction valve, electric

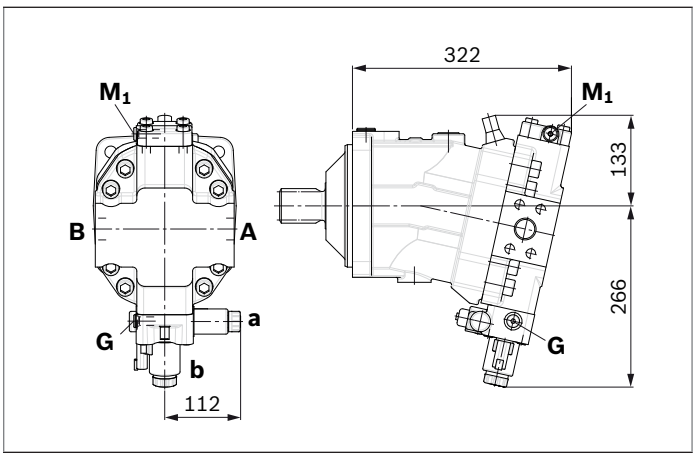

▼ **DA0** – Automatic speed-related control, negative control, with hydraulic travel direction valve

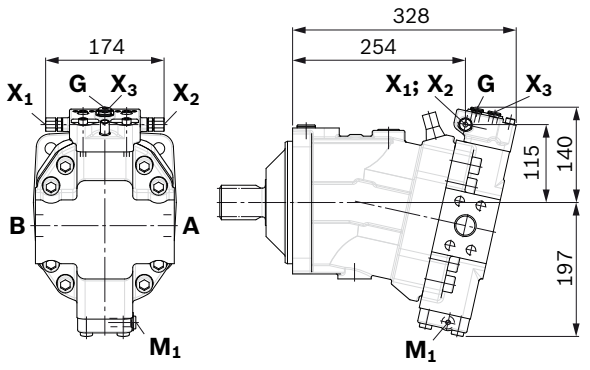

X_1, X_2 pipe fitting SDSC – L8×M12 – F according to ISO 8434-1

Use assembled fitting!

▼ **DA1, DA2** – Automatic speed-related control, negative control, with electric travel direction valve and electric $V_{g\,max}$ circuit

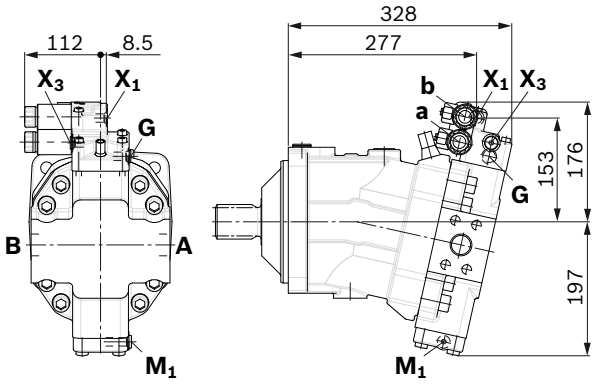

Dimensions size 215

EP5, EP6 – Proportional electric control, negative control

Port plate 2 — SAE working port **A** and **B** at side, opposite

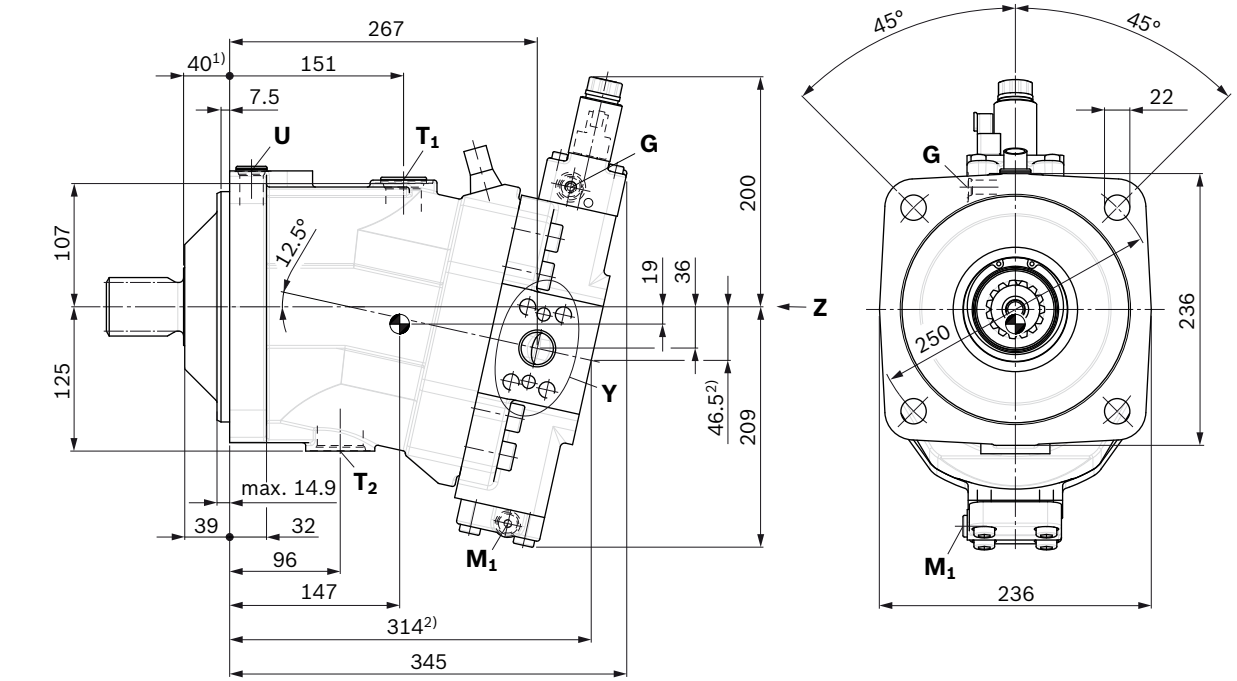

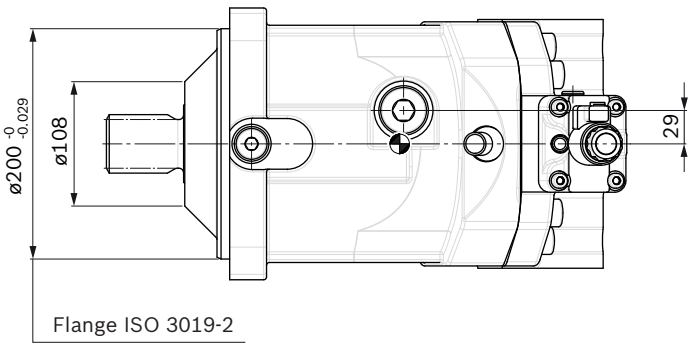

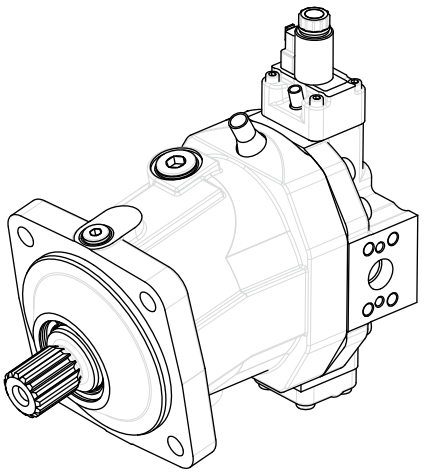

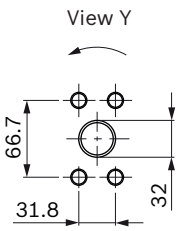

Center of gravity

1) To shaft collar
2) Port plate 1 — SAE working port **A** and **B** at rear

▼ **Location of the service line ports on the port plates** (view **Z**)

2 SAE working port **A** and **B** at side, opposite

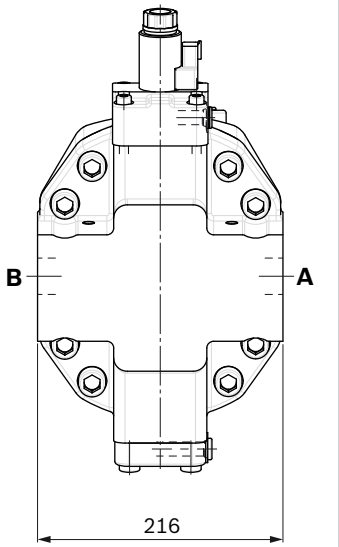

1 SAE working port **A** and **B** at rear

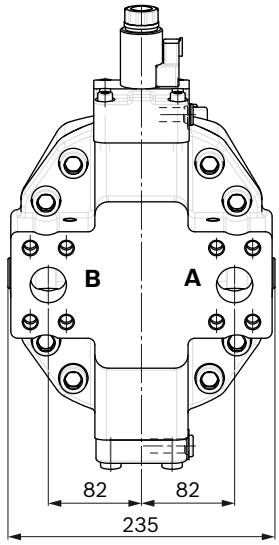

▼ **Splined shaft SAE J744**

T2 – 2 in 15T 8/16DP[1)]

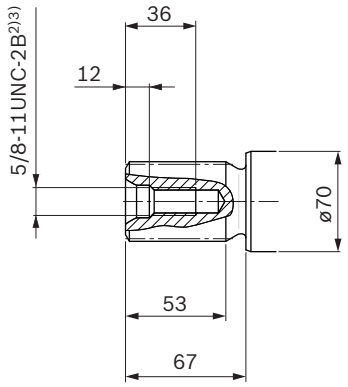

▼ **Splined shaft DIN 5480**

A2 – W50×2×24×9g

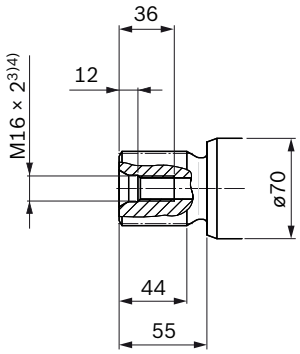

1) Involute spline acc. to ANSI B92.1a, 30° pressure angle, flat root, side fit, tolerance class 5
2) Thread according to ASME B1.1
3) For notes on tightening torques, see instruction manual
4) Center bore according to DIN 332 (thread according to DIN 13)

Ports		Standard	Size[1]	p_{max} [bar][2]	Status[6]
A, B	Working port Fastening thread A/B	SAE J518[3] DIN 13	1 1/4 in M14 × 2; 19 deep	500	O
T_1	Drai port	ISO 6149[5]	M33 × 2; 19 deep	3	X[4]
T_2	Drain port	ISO 6149[5]	M42 × 2; 19.5 deep	3	O[4]
G	Synchronous control	ISO 6149[5]	M14 × 1.5; 11.5 deep	500	X
U	Bearing flushing	ISO 6149[5]	M22 × 1.5; 15.5 deep	3	X
X	Pilot signal (HP, HZ, HA1T/HA2T)	ISO 6149[5]	M14 × 1.5; 11.5 deep	100	O
X	Pilot signal (HA1, HA2)	ISO 6149[5]	M14 × 1.5; 11.5 deep	3	X
X_1, X_2	Pilot signal (DA0)	ISO 8434-1	SDSC-L8×M12-F	40	O
X_1	Pilot signal (DA1, DA2)	ISO 6149[5]	M14 × 1.5; 11.5 deep	40	O
X_3	Pilot signal (DA1, DA2)	ISO 6149[5]	M14 × 1.5; 11.5 deep	40	X
M_1	Stroking chamber measurement	ISO 6149[5]	M14 × 1.5; 11.5 deep	500	X

1) For notes on tightening torques, see instruction manual
2) Depending on the application, momentary pressure peaks can occur.
3) Keep this in mind when selecting measuring devices and fittings.
4) Only dimensions according to SAE J518, metric fastening thread is a deviation from standard.
5) Depending on installation position, **T_1** or **T_2** must be connected (see also installation instructions on page 72).
6) The countersink can be deeper than as specified in the standard.
7) O = Must be connected (plugged on delivery)
X = Plugged (in normal operation)

▼ **EP1, EP2** – Electric proportional control, positive control

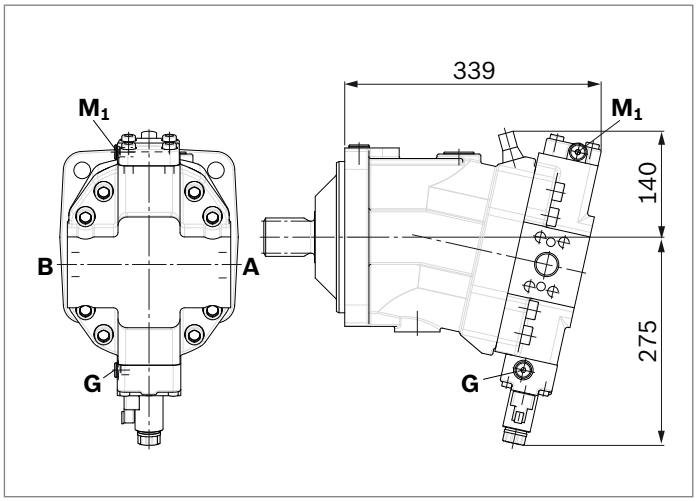

▼ **EP5D1, EP6D1** – Electric proportional control, negative control, with pressure control, fixed

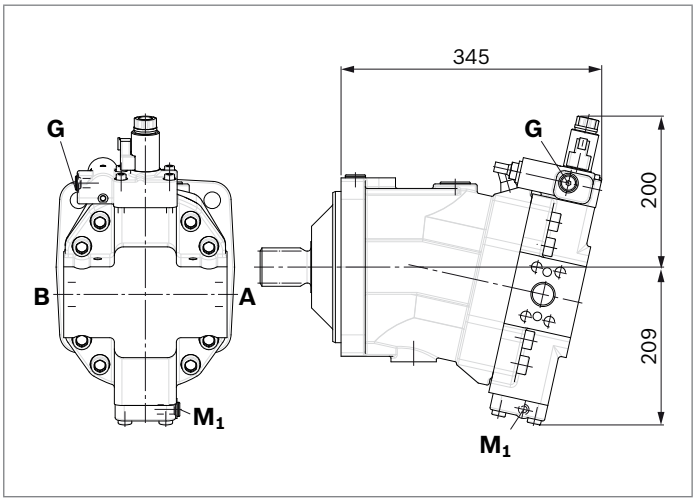

▼ **HP1, HP2** – Hydraulic proportional control, positive control

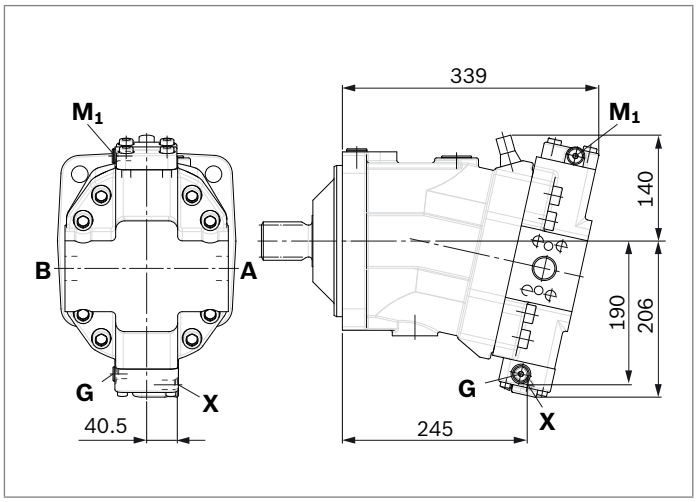

▼ **HP5, HP6** – Hydraulic proportional control, negative control

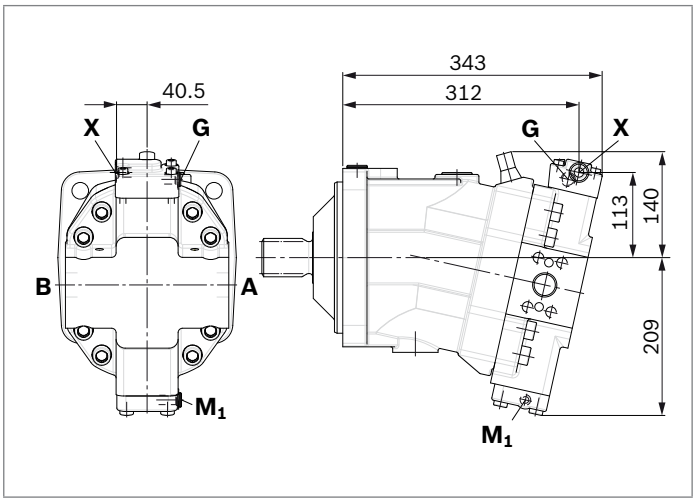

▼ **HP5D1, HP6D1** – Hydraulic proportional control, negative control, with pressure control, fixed

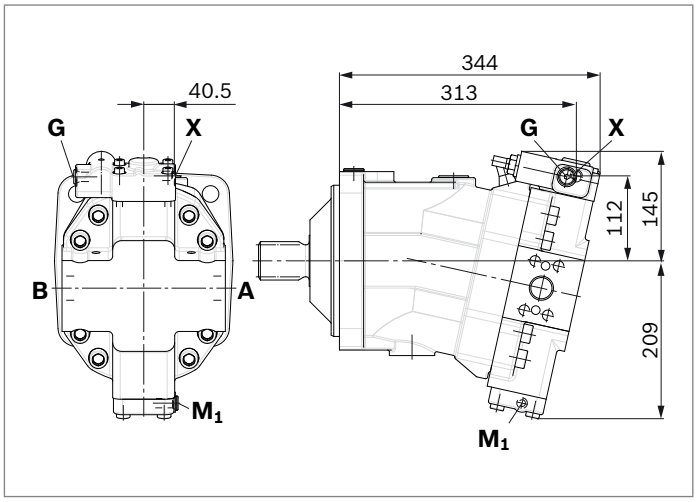

RE 91010/06.2010, Bosch Rexroth AG

423

▼ **HZ5** – Hydraulic two-point control, negative control

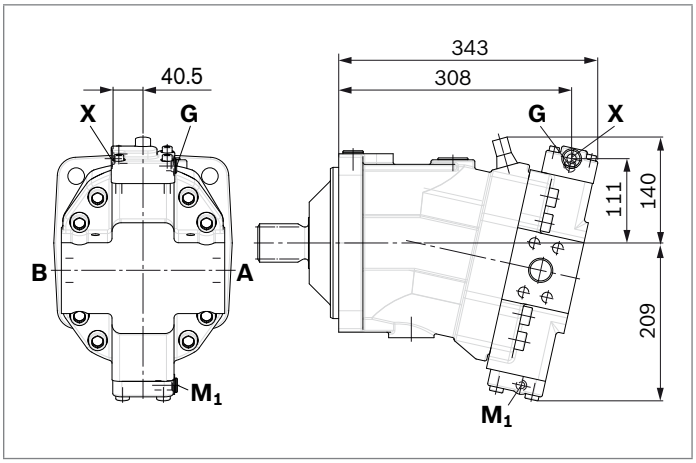

▼ **EZ5, EZ6** – Electric two-point control, negative control

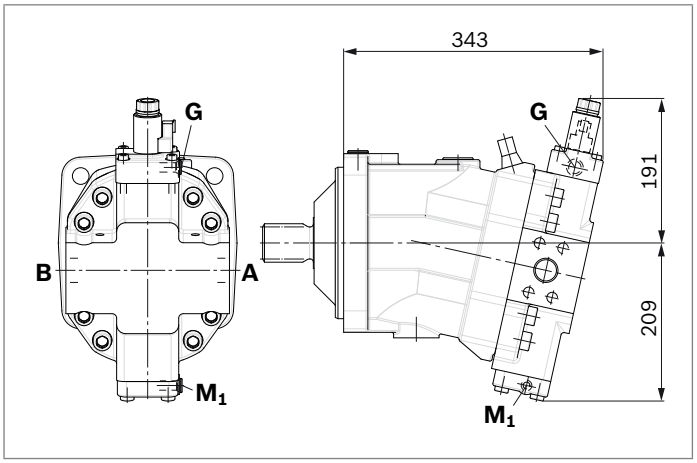

▼ **HA1, HA2 / HA1T3, HA2T3** – Automatic high-pressure-related control, positive control, with override hydraulic remote controlled, proportional

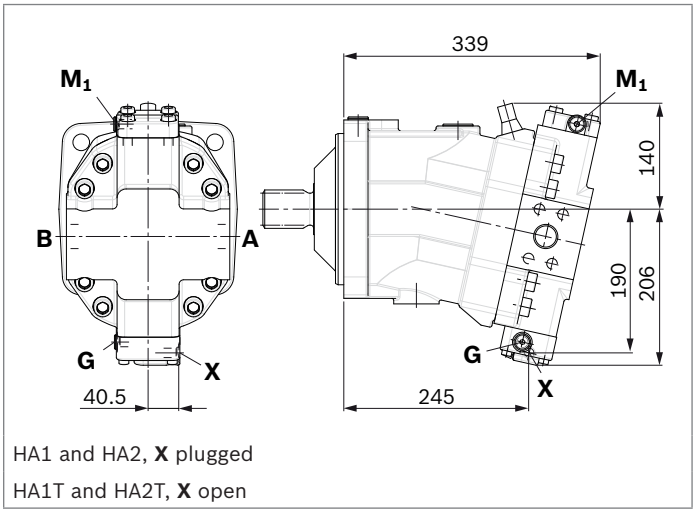

HA1 and HA2, **X** plugged

HA1T and HA2T, **X** open

▼ **HA1U1, HA2U2** – Automatic high-pressure-related control, positive control, with override, electric, two-point

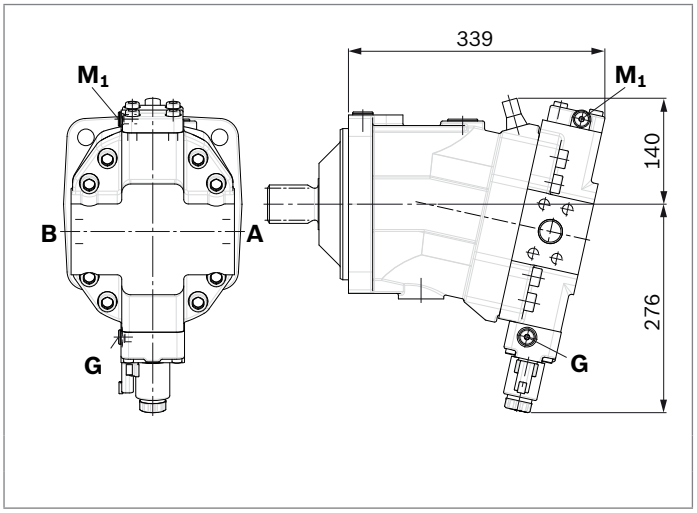

▼ **HA1R1, HA2R2** – Automatic high-pressure-related control, positive control, with override, electric and travel direction valve, electric

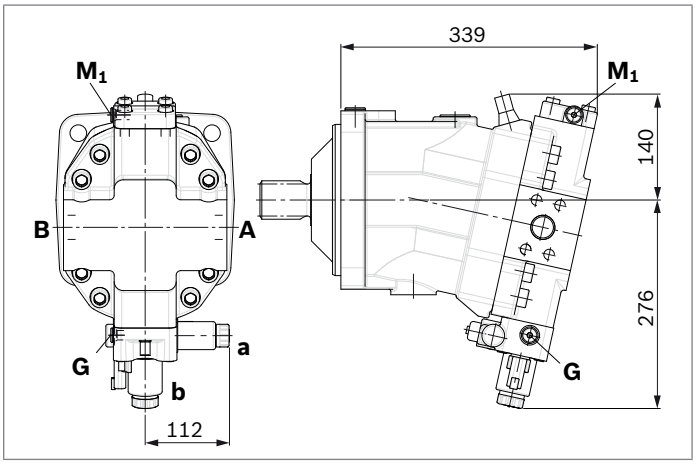

▼ **DA0** – Automatic speed-related control, negative control, with hydraulic travel direction valve

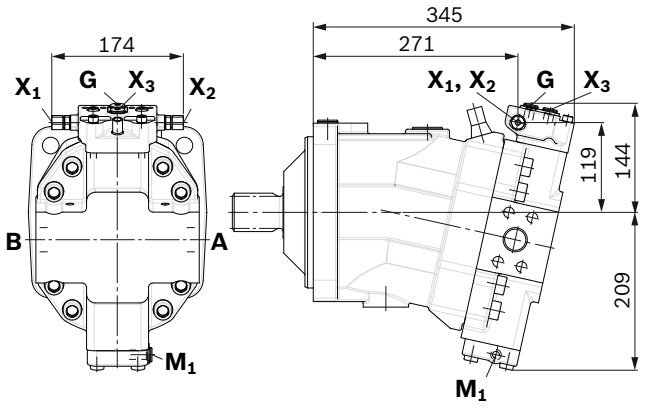

X$_1$, **X**$_2$ pipe fitting SDSC – L8×M12 – F according to ISO 8434-1

Use assembled fitting!

▼ **DA1, DA2** – Automatic speed-related control, negative control, with electric travel direction valve and electric $V_{g\,max}$ circuit

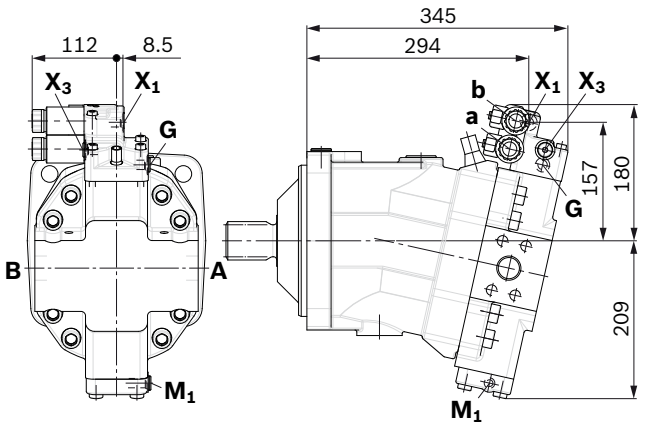

3

Connector for solenoids

DEUTSCH DT04-2P-EP04

Molded connector, 2-pin, without bidirectional suppressor diode

There is the following type of protection with mounted mating connector:

- IP67 (DIN/EN 60529) and
- IP69K (DIN 40050-9)

▼ **Circuit symbol**

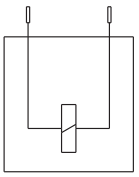

▼ **Mating connector DEUTSCH DT06-2S-EP04**

Consisting of	DT designation
1 housing	DT06-2S-EP04
1 wedge	W2S
2 sockets	0462-201-16141

The mating connector is not included in the scope of delivery. This can be supplied by Bosch Rexroth on request (material number R902601804).

Notice

- If necessary, you can change the position of the connector by turning the solenoid.
- The procedure is defined in the instruction manual.

Neutral position switch

The neutral position switch NLS electronically detects the neutral position of the A6VM, thereby ensuring the torque freedom of the motor. The use of the NLS in a transmission control provides a faster switching cycle in the drive. In addition, the switch reliability is improved and thereby the service life of the drive is increased. Type code, technical data, dimensions and parameters for the connector, plus safety instructions about the sensor can be found in the relevant data sheet 95152 – NLS.

Technical data

Type		NLS
Recommended operating voltage		5 V
Maximum voltage	not actuated	32 V
	actuated	11.5 V
Minimum permissible current		0 mA
Maximum permissible current		10 mA
Maximum switching cycle number		1 million
Contact type		normally open contact (open in unactuated state)
Type of protection (with mating connector plugged)		IP67/IP69K
Temperature range of sensor (medium and ambient temperature)[1]		-40 °C ... 125 °C
Temperature range of thread seal ring FKM[1]		-15 °C ... 125 °C
Pressure resistance	nominal	3 bar
	maximum (momentary peaks)	10 bar[2]

Notice
The minimum swivel angle is dependent on the $V_{g\,min}$-stop

▼ **Mating Connector**

Consisting of	Material number
1 housing	282080
1 socket contact	282403-1

The mating connector is not included in the scope of delivery. This mating connector can be ordered from AMP.

▼ **Dimensions**

Version “N” with neutral position switch mounted

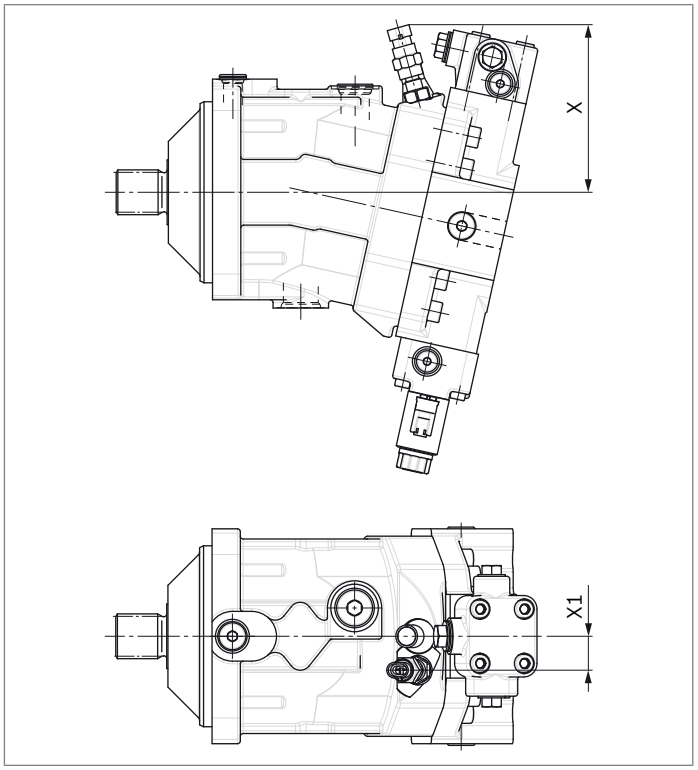

Size	Adjustable angle		X [mm]		X1 [mm]
	min.	max.	at min angle	at max angle	
85	0°	2°	144.7	141.4	28.0
115	0°	4°	148.1	140.4	30.0
150	0°	1°	153.1	150.9	30.0
170	0°	0°		153.1	30.0
215	0°	0°		159.1	30.0

1) Observe the permissible temperature range of the axial piston motor.
2) Observe the permissible viscosity range of the axial piston motor. At oil viscosities >1800 mm²/s, the switch may be unintentionally actuated by case pressure peaks of > 10 bar.

Flushing and boost pressure valve

The flushing and boost pressure valve is used to remove heat from the hydraulic circuit.
In a closed circuit, it is used for flushing the case and safeguarding the minimum boost pressure.
Hydraulic fluid is directed from the respective low pressure side into the motor housing. This is then fed into the reservoir, together with the leakage. The hydraulic fluid, removed out of the closed circuit must be replaced by cooled hydraulic fluid from the boost pump.
The valve is mounted onto the port plate or integrated (depending on the control type and size).

Cracking pressure of pressure retaining valve
(observe when adjusting the primary valve)

- Sizes 60 to 215, fixed setting 16 bar

Switching pressure of flushing spool Δp

- Sizes 60 to 115 (small flushing valve) 8±1 bar
- Sizes 115 to 215 (medium and large flushing valve) 17.5±1.5 bar

Flushing flow q_v
Orifices can be used to adjust the flushing flows as required. The following information is based on:
$\Delta p_{ND} = p_{ND} - p_G$ = 25 bar and ν = 10 mm²/s
(p_{ND} = low pressure, p_G = case pressure)

Small flushing valve for sizes 60 to 115

Material number of orifice	ø [mm]	q_v [l/min]	Code
R909651766	1.2	3.5	A
R909419695	1.4	5	B
R909419696	1.8	8	C
R909419697	2.0	10	D
R909444361	2.4	14	F

Medium flushing valve for size 115

Material number of orifice	ø [mm]	q_v [l/min]	Code
R909431310	2.8	18	I
R909435172	3.5	27	K
R909449967	5.0	31	L

Large flushing valve for sizes 150 to 215

Material number of orifice	ø [mm]	q_v [l/min]	Code
R909449998	1.8	8	C
R909431308	2.0	10	D
R909431309	2.5	15	G
R909431310	2.8	18	I
R902138235	3.1	21	J
R909435172	3.5	27	K
R909436622	4.0	31	L
R909449967	5.0	37	M

▼ **Circuit diagram EP**

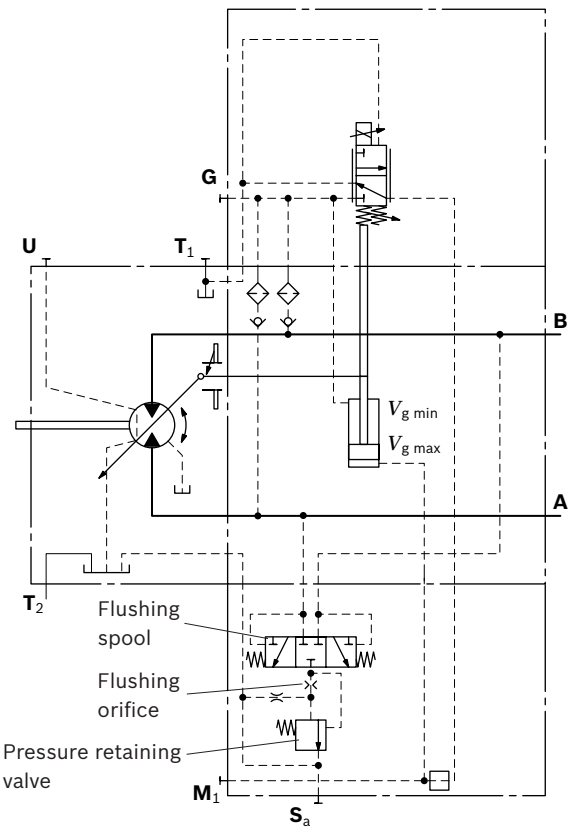

Notice

- Port **S_a** only for sizes 150 to 215
- For a flushing flow of 35 l/min, it is recommended that port **S_a** be connected in order to prevent an increase in case pressure. An increased case pressure reduces the flushing flow.

▼ **Dimensions of sizes 60 to 115 (small flushing valve)**

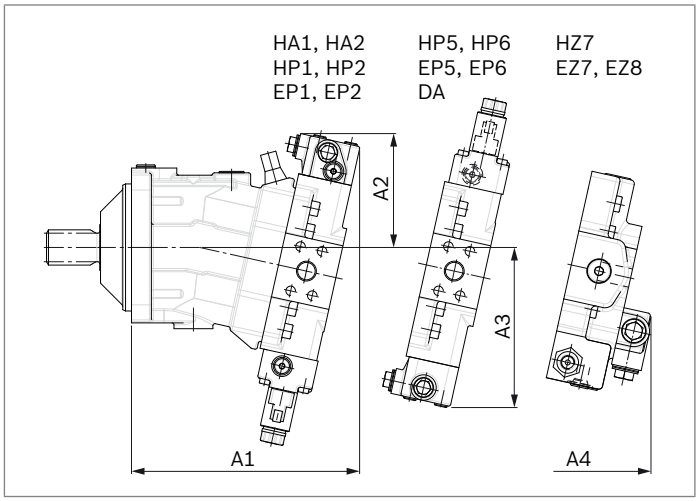

NG	A1	A2	A3	A4
60	245	137	183	236
85	273	142	194	254
115	287	143	202	269

▼ **Dimensions of size 115 (medium flushing valve)**

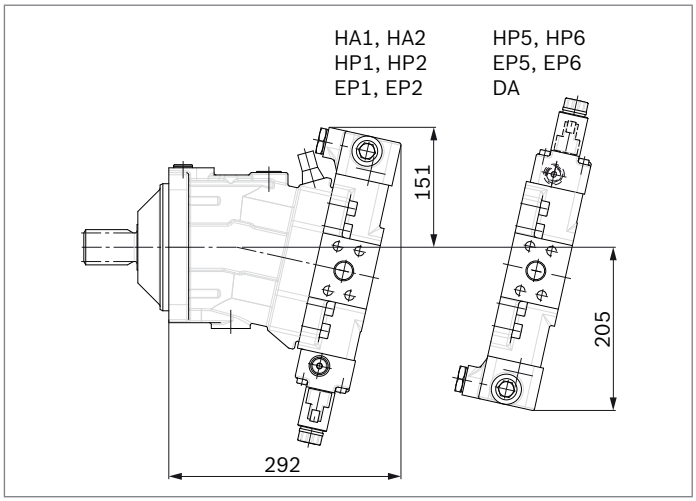

▼ **Dimensions for sizes 115 to 215 (large flushing valve)**

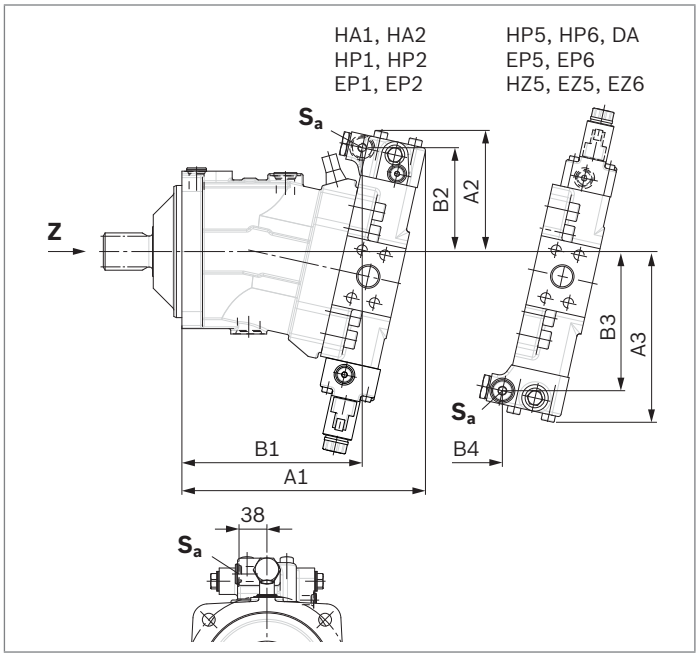

NG	A1	B1	A2	B2	A3	B3	B4	Sa[1)]
150	325	239	165	142	230	187	166	M22 × 1.5; 15.5 deep
170	332	246	165	142	233	190	172	M22 × 1.5; 15.5 deep
215	349	263	172	148	244	201	185	M22 × 1.5; 15.5 deep

1) ISO 6149, ports plugged (in normal operation)
For notes on tightening torques, see instruction manual.
The spot face may be deeper than that specified in the standard.

Counterbalance valve BVD and BVE

Function

Counterbalance valves for travel drives and winches operations are designed to reduce the danger of overspeeding and cavitation of axial piston motors in open circuits. Cavitation occurs if, during braking, when driving downhill or during the load-lowering process, the motor speed is greater than it should be for the given inlet flow and thus the supply pressure collapses.

If the supply pressure falls below the level specified for the relevant counterbalance valve, the counterbalance valve piston moves into the closed position.

The cross-sectional area of the counterbalance valve return duct is thenreduced, creating a bottleneck in the return flow of the hydraulic fluid. The pressure increases and brakes the motor until the rotational speed of the motor is again as it should be for the given inlet flow.

Notice

- BVD available for sizes 60 to 215 and BVE available for sizes 115 to 215.
- The counterbalance valve must be ordered additionally. We recommend ordering the counterbalance valve and the motor as a set.
  Ordering example: A6VM085HA1T30004A/71MWV0N4S 97W0-0 + BVD20F27S/41B–V03K16D0400S12
- For safety reasons, controls with beginning of control at $V_{g\ min}$ (e.g. HA) are not permissible for winch drives!
- Counterbalance valves must be optimized during prototype commissioning to prevent unacceptable operating conditions and compliance with the specification must be verified.
- The counterbalance valve does not replace the mechanical service brake and holding brake.
- Observe the detailed notes on the counterbalance valve in data sheet 95522 – BVD and in data sheet 95525 – BVE!
- For the design of the brake release valve, we require the following data for the mechanical holding brake:
  - the cracking pressure
  - the volume of the counterbalance spool between minimum travel (brake closed) and maximum stroke (brake released with 21 bar)
  - the required closing time for a warm device (oil viscosity approx. 15 mm²/s)

Permissible inlet flow or pressure when using DBV and BVD/BVE

Motor	Without valve		Limited values when using DBV and BVD/BVE							
			DBV[1]				BVD[2]/BVE[3]			
NG	p_{nom}/p_{max} [bar]	$q_{V\ max}$ [l/min]	NG	p_{nom}/p_{max} [bar]	q_V [l/min]	Code	NG	p_{nom}/p_{max} [bar]	q_V [l/min]	Code
60	450/500	276	22	350/420	240	7	20 (BVD)	350/420	220	7W
85		332								
115		410	32		400					
115		410				8	25 (BVD/BVE)		320	8W
150		494								
170		533								
215		628	On request							

Mounting of the counterbalance valve

When delivered, the counterbalance valve is fastened to the motor with two tacking screws (transport lock). The tacking screws may not be removed while mounting the working lines! If the counterbalance valve and motor are delivered separately, the counterbalance valve must first be fastened to the motor port plate using the provided tacking screws.

The counterbalance valve is finally mounted to the motor by fitting the SAE flange

The screws to be used and the instructions for mounting can be found in the instruction manual.

1) Pressure-relief valve
2) Counterbalance valve, double-acting
3) Counterbalance valve, one-sided

Counterbalance valve for travel drive BVD...F

Application option

- Travel drive for wheeled excavators (BVD and BVE)

▼ **Example circuit diagram for travel drive on wheeled excavators**

A6VM085HA1T30004A/71MWV0N4S97W0-0 + BVD20F27S/41B–V03K16D0400S12

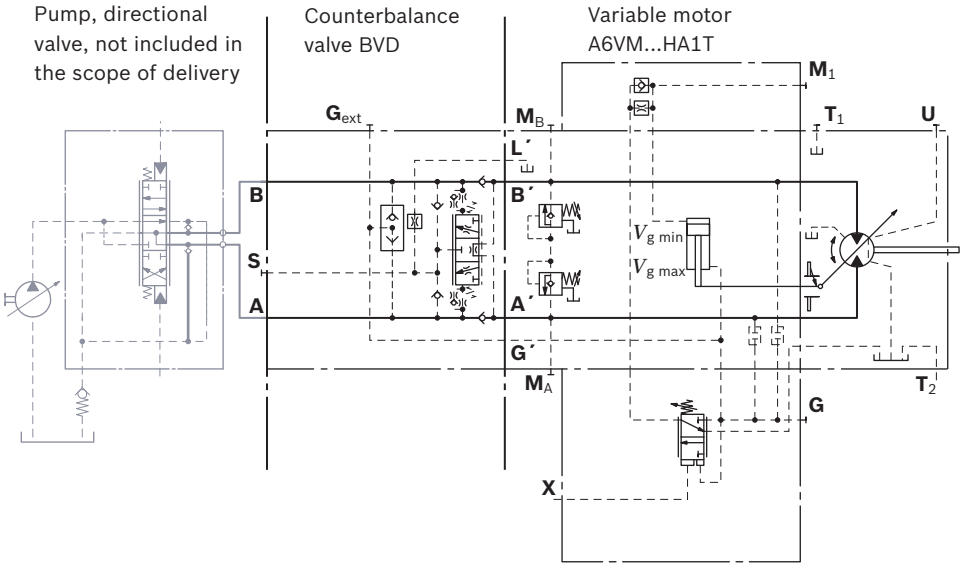

Counterbalance valve for winches and track drives BVD...W and BVE

Application option

- Winch drives in cranes (BVD and BVE)
- Track drive in excavator crawlers (BVD)

▼ **Example circuit diagram for winch drive in cranes**

A6VM085HP5D10001A/71MWV0N4S97W0-0 + BVE25W38S/51ND-V100K00D4599T30S00-0

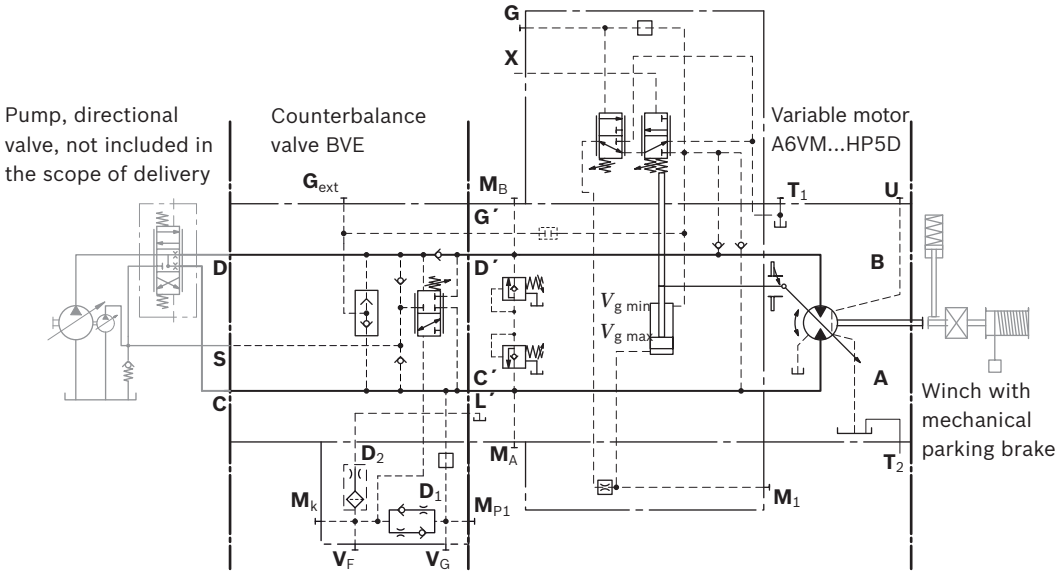

Dimensions

▼ **A6VM...HA, HP1, HP2 and EP1, EP2**

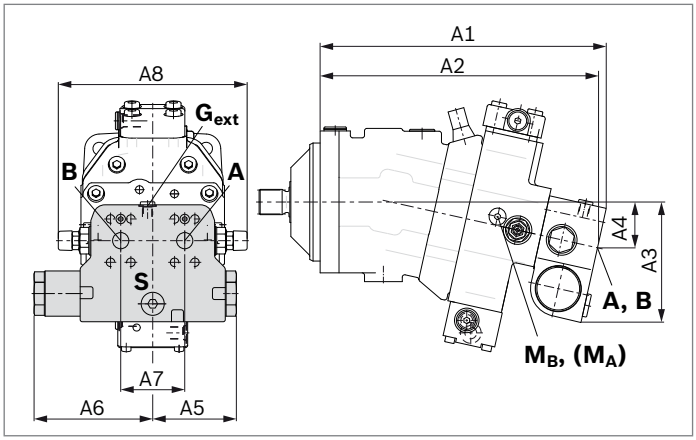

▼ **A6VM...HP5, HP6 and EP5, EP6**[1)]

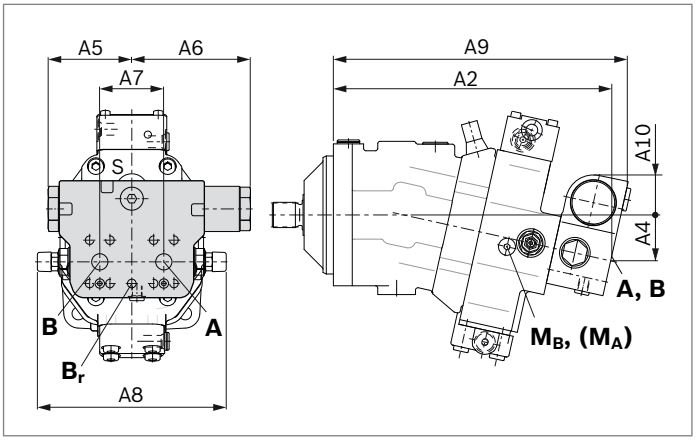

A6VM	Counterbalance valve											
NG...plate	Type	Ports	Dimensions									
		A, B	A1	A2	A3	A4	A5	A6	A7	A8	A9	A10
60...7	BVD20...17	3/4 in	311	302	143	50	98	139	75	222	326	50
85...7	BVD20...27	1 in	340	331	148	55	98	139	75	222	355	46
115...7	BVD20...28	1 in	362	353	152	59	98	139	84	234	377	41
115...8	BVD25...38	1 1/4 in	380	370	165	63	120.5	175	84	238	395	56
150...8	BVD25...38	1 1/4 in	411	401	168	67	120.5	175	84	238	426	53
170...8	BVD25...38	1 1/4 in	417	407	170	68	120.5	175	84	238	432	51
215...8	BVD25...38	1 1/4 in	448	438	176	74	120.5	175	84	299	463	46
115...8	BVE25...38	1 1/4 in	380	370	171	63	137	214	84	238	397	63
150...8	BVE25...38	1 1/4 in	411	401	175	67	137	214	84	238	423	59
170...8	BVE25...38	1 1/4 in	417	407	176	68	137	214	84	238	432	59
215...8	BVE25...38	1 1/4 in	448	438	182	74	137	214	84	299	463	52

Ports		Version	A6VM plate	Standard	Size[2)]	P_{max} [bar][3)]	Status[5)]
A, B	Working port			SAE J518	see table above	420	O
S	Infeed	BVD20		DIN 3852[4)]	M22 × 1.5; 14 deep	30	X
		BVD25, BVE25		DIN 3852[4)]	M27 × 2; 16 deep	30	X
B_r	Brake release, reduced high pressure	L	7	DIN 3852[4)]	M12 × 1.5; 12.5 deep	30	O
			8	DIN 3852[4)]	M12 × 1.5; 12 deep	30	O
G_{ext}	Brake release, high pressure	S		DIN 3852[4)]	M12 × 1.5; 12.5 deep	420	X
M_A, M_B	Pressure measurement **A** and **B**			ISO 6149[4)]	M18 × 1.5; 14.5 deep	420	X

1) At the mounting version for the controls HP5, HP6 and EP5, EP6, the cast-in port designations **A** and **B** on the BVD counterbalance valve do not correspond with the port designation of the A6VM motor.
The designation of the ports on the installation drawing of the motor is binding!

2) For notes on tightening torques, see instruction manual

3) Depending on the application, momentary pressure peaks can occur. Keep this in mind when selecting measuring devices and fittings.

4) The countersink can be deeper than as specified in the standard.

5) O = Must be connected (plugged on delivery)
X = Plugged (in normal operation)

Speed sensor

Version A6VM...U ("prepared for speed sensor", i.e. without sensor) is equipped with a spline on the rotary group.
A signal proportional to motor speed can be generated with the fitted DSA/DSM speed sensor. The DSA/DSM sensor registers the speed and direction of rotation.
Ordering code, technical data, dimensions and details on the connector, plus safety instructions about the sensor can be found in the relevant data sheet (95132 – DSM, 95133 – DSA).
The sensor is mounted on the port provided for this purpose with a mounting bolt. On deliveries without sensor, the port is plugged with a pressure-resistant cover.
We recommend ordering the A6VM variable motor complete with mounted sensor.

▼ **Circuit diagram EP**

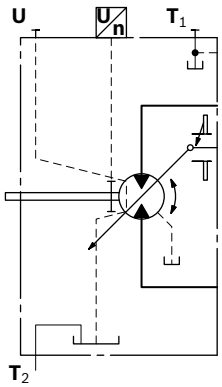

▼ **Dimensions**

"V" design with mounted speed sensor

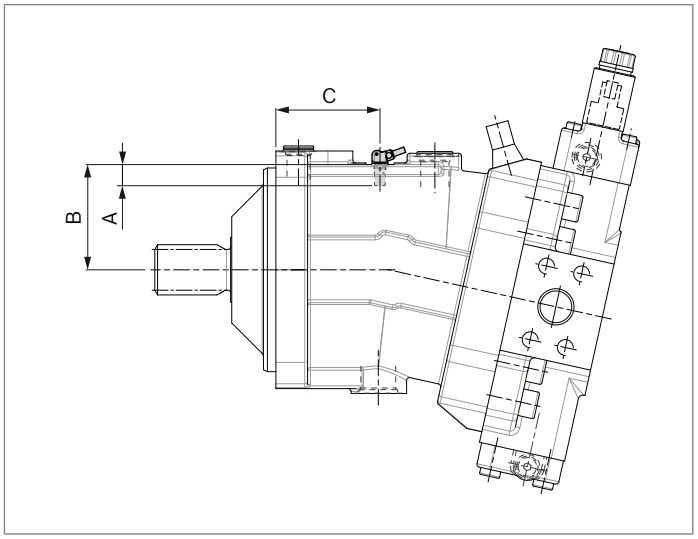

Size		60	85	115	150	170	215
Number of teeth		54	58	67	72	75	80
A	Insertion depth (tolerance -0.25)	18.4	18.4	18.4	18.4	18.4	18.4
B	Contact surface	75	79	88	93	96	101
C		66.2	75.2	77.2	91.2	91.7	95.2

Setting range for displacement

	60				85				115			
	$V_{g\,max}$ (cm³/rev)		$V_{g\,min}$ (cm³/rev)		$V_{g\,max}$ (cm³/rev)		$V_{g\,min}$ (cm³/rev)		$V_{g\,max}$ (cm³/rev)		$V_{g\,min}$ (cm³/rev)	
	from	to	from	to	from	to	from	to	from	to	from	to
A	62.0	62.0	0.0	15.0	85.2	85.2	0.0	9.0	115.6	115.6	0.0	24.0
	without screw		M10 × 60 R909154690		without screw		M12 × 60 R909083530		without screw		M12 × 70 R909085976	
B	62.0	62.0	> 15.0	30.5	85.2	85.2	> 9.0	28.0	115.6	115.6	> 24.0	47.5
	without screw		M10 × 70 R909153779		without screw		M12 × 70 R909085976		without screw		M12 × 80 R909153075	
C	62.0	62.0	> 30.5	43.0	85.2	85.2	> 28.0	47.0	115.6	115.6	> 47.5	71.0
	without screw		M10 × 80 R909154058		without screw		M12 × 80 R909153075		without screw		M12 × 90 R909154041	
D	x		x		85.2	85.2	> 47.0	59.0	115.6	115.6	> 71.0	80.0
					without screw		M12 × 90 R909154041		without screw		M12 × 100 R909153975	
E	< 62.0	47.5	0.0	15.0	< 85.2	77.0	0.0	9.0	< 115.6	93.5	0.0	24.0
	M10 × 60 R909154690		M10 × 60 R909154690		M12 × 60 R909083530		M12 × 60 R909083530		M12 × 70 R909085976		M12 × 70 R909085976	
F	< 62.0	47.5	> 15.0	30.5	< 85.2	77.0	> 9.0	28.0	< 115.6	93.5	> 24.0	47.5
	M10 × 60 R909154690		M10 × 70 R909153779		M12 × 60 R909083530		M12 × 70 R909085976		M12 × 70 R909085976		M12 × 80 R909085976	
G	< 62.0	47.5	> 30.5	43.0	< 85.2	77.0	> 28.0	47.0	< 115.6	93.5	> 47.5	71
	M10 × 60 R909154690		M10 × 80 R909154058		M12 × 60 R909083530		M12 × 80 R909153075		M12 × 70 R909085976		M12 × 90 R909154041	
H	x		x		< 85.2	77.0	> 47.0	59.0	< 115.6	93.5	> 71.0	80.0
					M12 × 60 R909083530		M12 × 90 R909154041		M12 × 70 R909085976		M12 × 100 R909153975	
J	< 47.5	33.0	0.0	15.0	< 77.0	58.0	0.0	9.0	< 93.5	71.0	0.0	24.0
	M10 × 70 R909153779		M10 × 60 R909154690		M12 × 70 R909085976		M12 × 60 R909083530		M12 × 80 R909153075		M12 × 70 R909085976	
K	< 47.5	33.0	> 15.0	30.5	< 77.0	58.0	> 9.0	28.0	< 93.5	71.0	> 24.0	47.5
	M10 × 70 R909153779		M10 × 70 R909153779		M12 × 70 R909085976		M12 × 70 R909085976		M12 × 80 R909153075		M12 × 80 R909153075	
L	< 47.5	33.0	> 30.5	43.0	< 77.0	58.0	> 28.0	47.0	< 93.5	71.0	> 47.5	71.0
	M10 × 70 R909153779		M10 × 80 R909154058		M12 × 70 R909085976		M12 × 80 R909153075		M12 × 80 R909153075		M12 × 90 R909154041	
M	x		x		< 77.0	58.0	> 47.0	59.0	< 93.5	71.0	> 71.0	80.0
					M12x70 R909085976		M12 × 90 R909154041		M12 × 80 R909153075		M12 × 100 R909153975	

Specify exact settings for $V_{g\,min}$ and $V_{g\,max}$ in plain text when ordering:

- $V_{g\,min}$ = ... cm³, $V_{g\,max}$ = ... cm³

Theoretical, maximum setting:

- for $V_{g\,min}$ = 0.7 × $V_{g\,max}$
- for $V_{g\,max}$ = 0.3 × $V_{g\,max}$

Settings that are not listed in the table may lead to damage.
Please contact us.

	150				170				215			
	$V_{g\,max}$ (cm³/rev)		$V_{g\,min}$ (cm³/rev)		$V_{g\,max}$ (cm³/U)		$V_{g\,min}$ (cm³/U)		$V_{g\,max}$ (cm³/U)		$V_{g\,min}$ (cm³/U)	
	from	to	from	to	from	to	from	to	from	to	from	to
A	152.1	152.1	0.0	44.0	171.8	171.8	0.0	35.0	216.5	216.5	0.0	44.5
	without screw		M12 × 80 R909153075		without screw		M12 × 80 R909153075		without screw		M12 × 80 R909153075	
B	152.1	152.1	> 44.0	69.0	171.8	171.8	> 35.0	63.5	216.5	216.5	> 44.5	80.0
	without screw		M12 × 90 R909154041		without screw		M12 × 90 R909154041		without screw		M12 × 90 R909154041	
C	152.1	152.1	> 69.0	99.0	171.8	171.8	> 63.5	98.0	216.5	216.5	> 80.0	115.0
	without screw		M12 × 100 R909153975		without screw		M12 × 100 R909153975		without screw		M12 × 100 R909153975	
D	152.1	152.1	> 99.0	106.0	171.8	171.8	> 98.0	120.0	216.5	216.5	> 115.0	150.0
	without screw		M12 × 110 R909154212		without screw		M12 × 110 R909154212		without screw		M12 × 110 R909154212	
E	< 152.1	111.0	0.0	44.0	< 171.8	139.0	0.0	35.0	< 216.5	175.0	0.0	44.5
	M12 × 80 R909153075		M12 × 80 R909153075		M12 × 80 R909153075		M10 × 80 R909153075		M12 × 80 R909153075		M12 × 80 R909153075	
F	< 152.1	111.0	> 44.0	69.0	< 171.8	139.0	> 35.0	63.5	< 216.5	175.0	> 44.5	80.0
	M12 × 80 R909153075		M12 × 90 R909085976		M12 × 80 R909153075		M12 × 90 R909154041		M12 × 80 R909153075		M12 × 90 R909154041	
G	< 152.1	111.0	> 69.0	99.0	< 171.8	139.0	> 63.5	98.0	< 216.5	175.0	> 80.0	115.0
	M12 × 80 R909153075		M12 × 100 R909153975		M12 × 80 R909153075		M12 × 100 R909153975		M12 × 80 R909153075		M12 × 100 R909153975	
H	< 152.1	111.0	> 99.0	106.0	< 171.8	139.0	> 98.0	120.0	< 216.5	175.0	> 115.0	150.0
	M12 × 80 R909153075		M12 × 110 R909154212		M12 × 80 R909153075		M12 × 110 R909154212		M12 × 80 R909153075		M12 × 110 R909154212	
J	< 111.0	87.0	0.0	44.0	< 139.0	112.0	0.0	35.0	< 175.0	141.0	0.0	44.5
	M12 × 90 R909154041		M12 × 80 R909153075		M12 × 90 R909154041		M12 x 80 R909153075		M12 x 90 R909154041		M12 x 80 R909153075	
K	< 111.0	87.0	> 44.0	69.0	< 139.0	112.0	> 35.0	63.5	< 175.0	141.0	> 44.5	80.0
	M12 × 90 R909154041		M12 × 90 R909154041		M12 x 90 R909154041		M12 × 90 R909154041		M12 × 90 R909154041		M12 × 90 R909154041	
L	< 111.0	87.0	> 69.0	99.0	< 139.0	112.0	> 63.5	98.0	< 175.0	141.0	> 80.0	115.0
	M12 × 90 R909154041		M12 × 100 R909153975		M12 × 90 R909154041		M12 × 100 R909153975		M12 × 90 R909154041		M12 × 100 R909153975	
M	< 111.0	87.0	> 99.0	106.0	< 139.0	112.0	> 98.0	120.0	< 175.0	141.0	> 115.0	150.0
	M12 × 90 R909154041		M12 × 110 R909154212		M12 × 90 R909154041		M12 × 110 R909154212		M12 × 90 R909154041		M12 × 110 R909154212	

Specify exact settings for $V_{g\,min}$ and $V_{g\,max}$ in plain text when ordering:

- $V_{g\,min}$ = ... cm³, $V_{g\,max}$ = ... cm³

Theoretical, maximum setting:

- for $V_{g\,min}$ = 0.7 × $V_{g\,max}$
- for $V_{g\ max}$ = 0.3 × $V_{g\,max}$

Settings that are not listed in the table may lead to damage.

Please contact us.

Installation instructions

General

During commissioning and operation, the axial piston unit must be filled with hydraulic fluid and air bled. This must also be observed following a relatively long standstill as the fluid from the axial piston unit may drain back to the reservoir via the hydraulic lines.

Particularly in the installation position "drive shaft upwards" filling and air bleeding must be carried out completely as there is, for example, a danger of dry running.

The leakage in the motor housing must be directed to the reservoir via the highest available drain port (**T_1**, **T_2**).

For combinations of multiple units, make sure that the respective case pressure in each unit is not exceeded. In the event of pressure differences at the drain ports of the units, the shared drain line must be changed so that the maximum permissible case pressure of all connected units is not exceeded at any operational conditions. If this is not possible, separate drain lines must be laid.

To achieve favorable noise values, decouple all connecting lines using elastic elements and avoid above-reservoir installation.

In all operating conditions, the drain line must flow into the reservoir below the minimum fluid level.

Notice

In certain installation positions, an influence on the control characteristic can be expected. Gravity, dead weight and case pressure can cause minor characteristic shifts and changes in response time.

Key	
F	Filling / air bleeding
U	Bearing flushing / air bleed port
T_1, T_2	Drain port
$h_{t\,min}$	Minimum required immersion depth (200 mm)
h_{min}	Minimum required spacing to reservoir bottom (100 mm)

Installation position

See examples **1** to **8** below.

Additional installation positions are available upon request.

Recommended installation position: **1** and **2**

Below-reservoir installation (standard)

Below-reservoir installation means that the axial piston unit is installed outside of the reservoir below the minimum fluid level.

Installation position	Air bleed	Filling
1 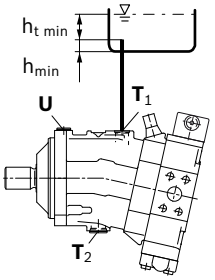		**T_1**
2 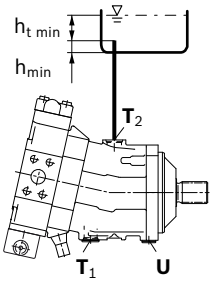		**T_2**
3 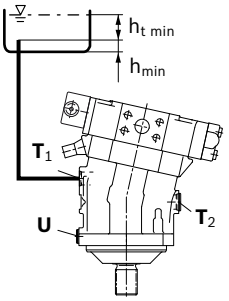		**T_1**
4 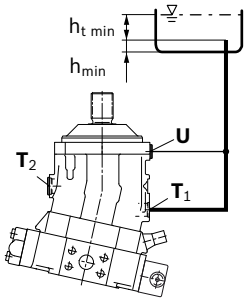	**U**	**T_1**

Above-reservoir installation

Above-reservoir installation means that the axial piston unit is installed above the minimum fluid level of the reservoir.
Recommendation for installation position 8 (drive shaft upward):
A check valve in the drain line (cracking pressure 0.5 bar) can prevent draining of the motor housing.

Installation position	Air bleed	Filling
5 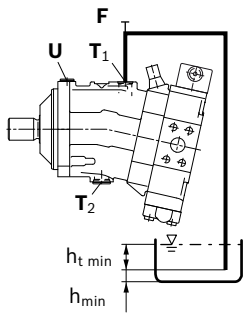	U (F)	T1 (F)
6 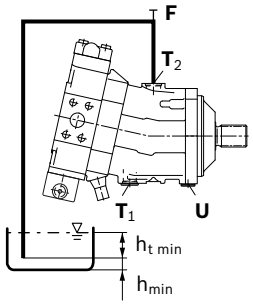	F	T2 (F)
7 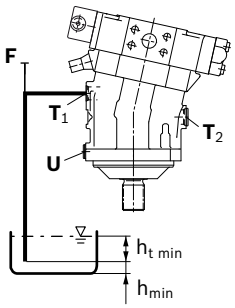	F	T1 (F)
8 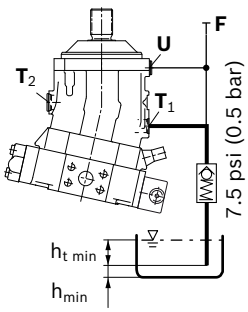	U	T1 (F)

Notice

Port **F** is part of the external piping and must be provided on the customer side to make filling and air bleeding easier.

Project planning notes

- The motor A6VM is designed to be used in open and closed circuits.
- The project planning, installation and commissioning of the axial piston unit requires the involvement of qualified skilled personnel.
- Before using the axial piston unit, please read the corresponding instruction manual completely and thoroughly. If necessary, these can be requested from Bosch Rexroth.
- Before finalizing your design, please request a binding installation drawing.
- The specified data and notes contained herein must be observed.
- For safety reasons, controls with beginning of control at $V_{g\,min}$ (e.g. HA) are not permissible for winch drives, e.g. anchor winches.
- Depending on the operating conditions of the axial piston unit (working pressure, fluid temperature), the characteristic curve may shift.
- Preservation: Our axial piston units are supplied as standard with preservative protection for a maximum of 12 months. If longer preservative protection is required (maximum 24 months), please specify this in plain text when placing your order. The preservation periods apply under optimal storage conditions, details of which can be found in the data sheet 90312 or the instruction manual.
- Not all versions of the product are approved for use in a safety function according to ISO 13849. Please consult the responsible contact person at Bosch Rexroth if you require reliability parameters (e.g. $MTTF_d$) for functional safety.
- Depending on the type of control used, electromagnetic effects can be produced when using solenoids. When a direct current is applied, solenoids do not cause electromagnetic interference nor is their operation impaired by electromagnetic interference.
  Other behavior can result when a modulated direct current (e.g. PWM signal) is applied. Potential electromagnetic interference for persons (e.g. persons with a pacemaker) and other components must be tested by the machine manufacturer.
- Please note the details regarding the tightening torques of port threads and other threaded joints in the instruction manual.
- Working ports:
  - The ports and fastening threads are designed for the specified maximum pressure. The machine or system manufacturer must ensure that the connecting elements and lines correspond to the specified application conditions (pressure, flow, hydraulic fluid, temperature) with the necessary safety factors.
  - The working ports and function ports are only intended to accommodate hydraulic lines.

Safety instructions

- During and shortly after operation, there is a risk of getting burnt on the axial piston unit and especially on the solenoids. Take appropriate safety measures (e.g. by wearing protective clothing).
- Moving parts in control equipment (e.g. valve pistons) can, under certain circumstances get stuck in position as a result of contamination (e.g. impure hydraulic fluid, abrasion, or residual dirt from components). As a result, the hydraulic fluid flow and the build-up of torque in the axial piston unit can no longer respond correctly to the operator's specifications. Even the use of various filter elements (external or internal flow filter) will not rule out a fault but merely reduce the risk.
  The machine/system manufacturer must test whether remedial measures are needed on the machine for the application concerned in order to set the consumer being driven to a safe position (e.g. safe stop) and if necessary to ensure it is properly implemented.
- Moving parts in high-pressure relief valves may in certain circumstances become stuck in an undefined position due to contamination (e.g. contaminated hydraulic fluid). This can result in restriction or loss of the load holding function in lifting winches.
  The machine/system manufacturer must check whether additional measures are required on the machine for the relevant application in order to keep the load in a safe position and ensure they are properly implemented.
- When using the axial piston motor in winch drives, make certain that the technical limit values are not exceeded under all operating conditions. If the axial piston motor is extremely overloaded (e.g. if the maximum permissible rotational speeds are exceeded during weighing of the anchor while the ship is in motion), the rotary group may be damaged and, in the worst case, the axial piston motor may burst. The machine manufacturer / system manufacturer is to undertake additional measures, up to and including encapsulation.

Rexroth
Bosch Group

Axial piston variable motor
A6VM

Data sheet

3

Series 71
Size 280
Nominal pressure 450 bar
Maximum pressure 500 bar
Open and closed circuits

Contents

Ordering code for standard program	2
Technical data	4
HP – Proportional hydraulic control	9
EP – Proportional electric control	11
HZ – Two-point hydraulic control	13
EZ – Two-point electric control	14
HA – Automatic high-pressure related control	15
DA – Automatic speed-related control	17
Dimensions, size 280	18
Connector for solenoids	21
Flushing and boost pressure valve	22
Setting range for displacement	23
Speed sensor	24
Installation instructions	25
General instructions	26

Features

- Variable motor with axial tapered piston rotary group of bent-axis design, for hydrostatic drives in open and closed circuit
- For use in mobile and stationary applications
- The wide control range enables the variable motor to satisfy the requirement for high speed and high torque.
- The displacement can be infinitely changed from $V_{g\,max}$ to $V_{g\,min} = 0$.
- The output speed is dependent on the flow of the pump and the displacement of the motor.
- The output torque increases with the pressure differential between the high and low-pressure side and with increasing displacement.
- Wide control range with hydrostatic transmissions
- Wide selection of control devices
- Cost savings through elimination of gear shifts and possibility of using smaller pumps
- Compact, robust motor with long service life
- High power density
- Good starting efficiency
- Version with 9-piston rotary group
- Good low speed characteristics
- High uniformity

Ordering code for standard program

A6V	M					0	0			/	71	M	W	V	0	S4					–	
01	02	03	04	05	06	07	08	09	10		11	12	13	14	15	16	17	18	19	20		21

Axial piston unit

01	Bent-axis design, variable, nominal pressure 450 bar, maximum pressure 500 bar	**A6V**

Operating mode

02	Motor	**M**

Size (NG)

03	Geometric displacement, see table of values on page 7	**280**

Control devices

04	Proportional control hydraulic	positive control	Δp_{St} = 10 bar	●	**HP1**
			Δp_{St} = 25 bar	●	**HP2**
		negative control	Δp_{St} = 10 bar	●	**HP5**
			Δp_{St} = 25 bar	●	**HP6**
	Proportional control electric	positive control	U = 12 V DC	●	**EP1**
			U = 24 V DC	●	**EP2**
		negative control	U = 12 V DC	●	**EP5**
			U = 24 V DC	●	**EP6**
	Two-point control hydraulic	negative control		●	**HZ5**
	Two-point control electric	negative control	U = 12 V DC	❍	**EZ5**
			U = 24 V DC	❍	**EZ6**
	Automatic control high-pressure related, positive control	with minimum pressure increase	$\Delta p \leq$ approx. 10 bar	●	**HA1**
		with pressure increase	Δp = 100 bar	●	**HA2**
	Automatic control speed-related, negative control p_{St}/p_{HD} = 5/100	hydr. travel direction valve		❍	**DA0**

Pressure control/overrides

05	Without pressure control/override	**00**
	Pressure control fixed setting, only for HP5, HP6, EP5 and EP6	**D1**
	Override of the HA1 and HA2 controls, hydraulic remote control, proportional	**T3**

Connector for solenoids[1] (see page 21)

06	Without connector (without solenoid, only for hydraulic control)	**0**
	DEUTSCH - molded connector, 2-pin – without suppressor diode	**P**

Additional function 1

07	Without additional function	**0**

Additional function 2

08	Without additional function	**0**

Response time damping (for selection, see control)

09	Without damping (standard with HP and EP)		**0**
	Damping	HP, EP, HP5,6D. and EP5,6D., HZ, EZ	**1**
		One-sided in inlet to large stroking chamber (HA)	**4**
		One-sided in outlet from large stroking chamber (DA)	**7**

● = Available ❍ = On request – = Not available

1) Connectors for other electric components can deviate.

Ordering code for standard program

A6V	M					0	0			/	71	M	W	V	0	S4					–	
01	02	03	04	05	06	07	08	09	10		11	12	13	14	15	16	17	18	19	20		21

Setting ranges for displacement[2)]

	$V_{g\,max}$ setting screw	$V_{g\,min}$ setting screw	
10	Short	short (0-adjustable)	**E**
		medium	**F**
		long	**G**
		extra long	**H**
	Medium	short (0-adjustable)	**J**
		medium	**K**
		long	**L**
		extra long	**M**

Series

11	Series 7, index 1	**71**

Configuration of ports and fastening threads

12	Metric, port threads with O-ring seal according to ISO 6149	**M**

Direction of rotation

13	Viewed on drive shaft, bidirectional	**W**

Seals

14	FKM (fluor-caoutchouc)	**V**

Drive shaft bearing

15	Standard bearing	**0**

Mounting flange

16	ISO 3019-2	200-4	**S4**

Drive shafts

17	Splined shaft ANSI B92.1a	2 1/4 in 17T 8/16DP	**T3**
	Splined shaft DIN 5480	W60x2x28x9g	**A4**

Port plates for service lines

18	SAE flange ports A and B at rear	**1**
	SAE flange ports A and B at side, opposite	**2**

Valves (see page 22)

19	Without valve	**0**
	With flushing and boost pressure valve mounted; flushing on both sides; flushing flow q_v, adjustable 0 to 60 l/min [3)]	**V**

Speed sensors

20	Without speed sensor	**0**
	Prepared for HDD speed sensor	**F**
	HDD speed sensor mounted[4)]	**H**

Standard / special version

21	Standard version	**0**
	Standard version with installation variants, e. g. T ports against standard open or closed	**Y**
	Special version	**S**

2) The adjustment values for the setting screws can be found in the table (page 23).
3) Specify the required flushing flow at $\Delta p = p_{ND} - p_G$ and at $\nu = 10\ mm^2/s$ in plain text when ordering (p_{ND} = low pressure, p_G = case pressure, standard 25 bar).
4) Specify ordering code of sensor according to data sheet (HDD – RE 95135) separately and observe the requirements on the electronics.

Technical data

Hydraulic fluid

Before starting project planning, please refer to our data sheets RE 90220 (mineral oil), RE 90221 (environmentally acceptable hydraulic fluids) and RE 90222 (HFD hydraulic fluids) for detailed information regarding the selection of hydraulic fluid and application conditions.

The variable motor A6VM is not suitable for operation with HFA hydraulic fluid. If HFB, HFC, or HFD or environmentally acceptable hydraulic fluids are used, the limitations regarding technical data must be observed or other seals used. Please contact us.

Selection diagram

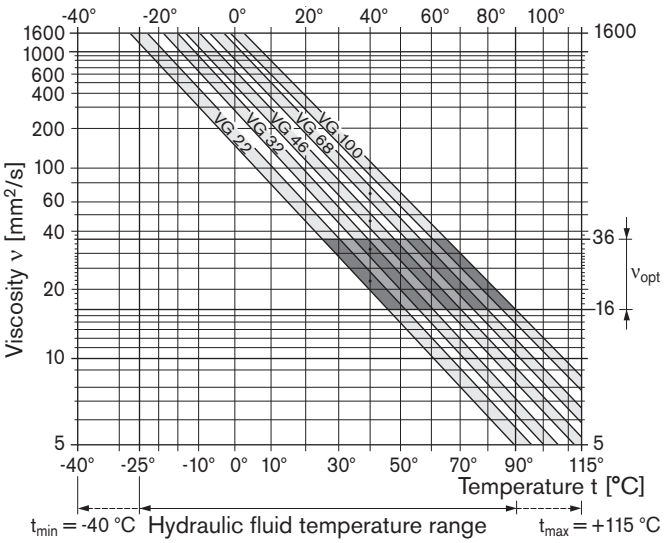

Details regarding the selection of hydraulic fluid

Choosing the correct hydraulic fluid requires knowledge of the operating temperature in relation to the ambient temperature: the circuit temperature in a closed circuit, the reservoir temperature in an open circuit.

The hydraulic fluid should be selected so that the operating viscosity in the operating temperature range is within the optimum range (ν_{opt}) see shaded area of the selection diagram. We recommended that the higher viscosity class be selected in each case.

Example: At an ambient temperature of X °C, an operating temperature of 60 °C is set in the circuit. In the optimum viscosity range ($\nu_{opt.}$, shaded area) this corresponds to the viscosity classes VG 46 and VG 68. To be selected: VG 68.

Note

The case drain temperature, which is affected by pressure and speed, can be higher than the circuit temperature or reservoir temperature. At no point of the component may the temperature be higher than 115 °C. The temperature difference specified below is to be taken into account when determining the viscosity in the bearing.

If the above conditions cannot be maintained due to extreme operating parameters, we recommend flushing the case at port U or using a flushing and boost pressure valve (see page 22).

Viscosity and temperature of hydraulic fluid

	Viscosity [mm²/s]	Temperature	Comment
Transport and storage at ambient temperature		$T_{min} \geq$ -50 °C T_{opt} = +5 °C to +20 °C	factory preservation: up to 12 months with standard, up to 24 months with long-term
(Cold) start-up[1]	ν_{max} = 1600	$T_{St} \geq$ -40 °C	t ≤ 3 min, without load (p ≤ 50 bar), n ≤ 1000 rpm
Permissible temperature difference		ΔT ≤ 25 K	between axial piston unit and hydraulic fluid in the system
Warm-up phase	ν < 1600 to 400	T = -40 °C to -25 °C	at p ≤ 0.7 • p_{nom}, n ≤ 0.5 • n_{nom} and t ≤ 15 min
Operating phase			
Temperature difference		ΔT = approx. 12 K	Between hydraulic fluid in the bearing and at port T. The bearing temperature can be reduced by flushing via port U.
Maximum temperature		115 °C	in the bearing
		103 °C	measured at port T
Continuous operation	ν = 400 to 10 ν_{opt} = 36 to 16	T = -25 °C to +90 °C	measured at port T, no restriction within the permissible data
Short-term operation[2]	$\nu_{min} \geq$ 7	T_{max} = +103 °C	measured at port T, t < 3 min, p < 0.3 • p_{nom}
FKM shaft seal[1]		T ≤ +115 °C	see page 5

1) At temperatures below -25 °C, an NBR shaft seal is required (permissible temperature range: -40 °C to +90 °C).

2) Please contact us.

Filtration of the hydraulic fluid

Finer filtration improves the cleanliness level of the hydraulic fluid, which increases the service life of the axial piston unit.

To ensure the functional reliability of the axial piston unit, a gravimetric analysis of the hydraulic fluid is necessary to determine the amount of solid contaminant and to determine the cleanliness level according to ISO 4406. A cleanliness level of at least 20/18/15 is to be maintained.

At very high hydraulic fluid temperatures (90 °C to maximum 115 °C), a cleanliness level of at least 19/17/14 according to ISO 4406 is necessary.

If the above classes cannot be achieved, please contact us.

Shaft seal

Permissible pressure loading

The service life of the shaft seal is influenced by the speed of the axial piston unit and the case drain pressure (case pressure). The mean differential pressure of 2 bar between the case and the ambient pressure may not be enduringly exceeded at normal operating temperature. For a higher differential pressure at reduced speed, see diagram. Momentary pressure spikes ($t < 0.1$ s) of up to 10 bar are permitted. The service life of the shaft seal decreases with an increase in the frequency of pressure spikes.

The case pressure must be equal to or higher than the ambient pressure.

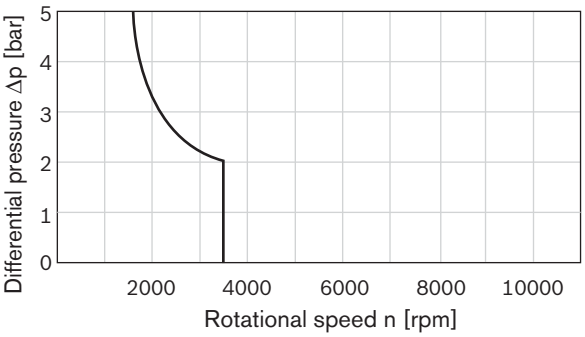

The values are valid for an ambient pressure $p_{abs} = 1$ bar.

Temperature range

The FKM shaft seal may be used for case drain temperatures from -25 °C to +115 °C.

Note
For application cases below -25 °C, an NBR shaft seal is required (permissible temperature range: -40 °C to +90 °C).
State NBR shaft seal in plain text when ordering.
Please contact us.

Influence of case pressure on beginning of control

An increase in case pressure affects the beginning of control of the variable motor when using the following control options:

HP, HA.T3 _____ increase
DA _____ decrease

With the following settings, an increase in case pressure will have no effect on the beginning of control: EP, HA

The factory setting of the beginning of control is made at $p_{abs} = 2$ bar case pressure.

Flow direction

Direction of rotation, viewed on drive shaft	
clockwise	**counter-clockwise**
A to **B**	**B** to **A**

Technical data

Operating pressure range

(operating with mineral oil)

Pressure at service line port A or B

Nominal pressure p_{nom} _____ 450 bar absolute

Maximum pressure p_{max} _____ 500 bar absolute
Single operating period at $V_{g\,max}$ and $n_{max} = n_{nom}/2$_____ 10 s
Total operating period _____ 300 h

Minimum pressure (high-pressure side) ___25 bar absolute

Summation pressure (pressure A + pressure B) p_{Su} 700 bar

Rate of pressure change $R_{A\,max}$
with integrated pressure-relief valve _____9000 bar/s without pressure-relief valve_____ 16000 bar/s

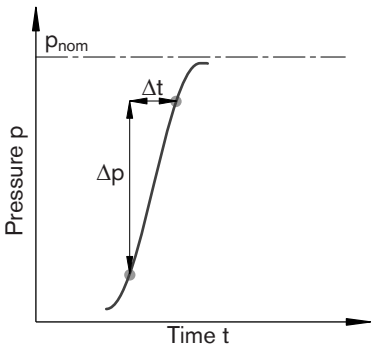

Minimum pressure – pump operation (inlet)
To prevent damage to the axial piston motor in pump operation mode (change of high-pressure side with unchanged direction of rotation, e. g. when braking), a minimum pressure must be guaranteed at the service line port (inlet). This minimum pressure is dependent on the speed and displacement of the axial piston unit (see characteristic curve below).

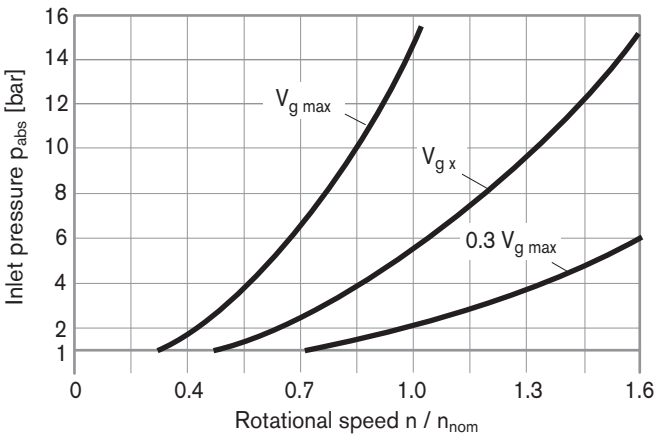

This diagram is only valid for the optimum viscosity range from $\nu_{opt} = 36$ to 16 mm^2/s.
Please contact us if the above conditions cannot be guaranteed.

Note
Values for other hydraulic fluids, please contact us.

Definition

Nominal pressure p_{nom}
The nominal pressure corresponds to the maximum design pressure.

Maximum pressure p_{max}
The maximum pressure corresponds to the maximum operating pressure within the single operating period. The sum of the single operating periods must not exceed the total operating period.

Minimum pressure (high-pressure side)
Minimum pressure at the high-pressure side (A or B) which is required in order to prevent damage to the axial piston unit.

Summation pressure p_{Su}
The summation pressure is the sum of the pressures at both service line ports (A and B).

Rate of pressure change R_A
Maximum permissible rate of pressure build-up and reduction during a pressure change over the entire pressure range.

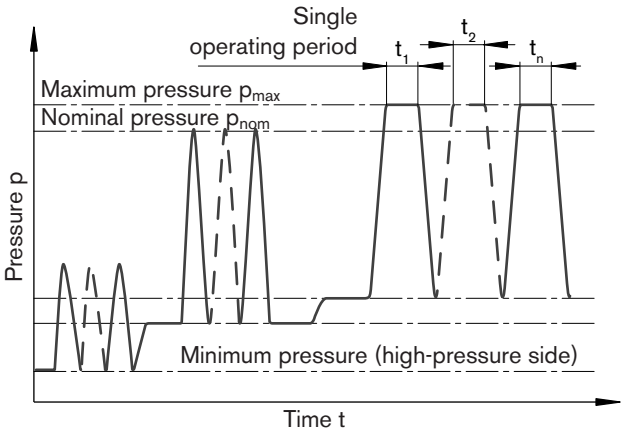

Total operating period = $t_1 + t_2 + \ldots + t_n$

Technical data

Table of values (theoretical values, without efficiency and tolerances; values rounded)

Size	NG		280
Displacement geometric, per revolution	$V_{g\,max}$	cm^3	280.1
	$V_{g\,min}$	cm^3	0
	$V_{g\,x}$	cm^3	118 (see diagram below)
Maximum speed[1] (while adhering to the maximum permissible input flow)			
at $V_{g\,max}$	n_{nom}	rpm	2500
At $V_g < V_{g\,x}$ (see diagram below)	n_{max}	rpm	3550
at $V_{g\,0}$	n_{max}	rpm	following consultation
Input flow at n_{nom} and $V_{g\,max}$	$q_{V\,max}$	l/min	700
Torque[2] at $V_{g\,max}$ and $\Delta p = 450$ bar	T	Nm	2006
Rotary stiffness			
$V_{g\,max}$ to $V_g/2$	c_{min}	kNm/rad	72
$V_g/2$ to 0 (interpolated)	c_{max}	kNm/rad	209
Moment of inertia for rotary group	J_{GR}	kgm^2	0.0479
Maximum angular acceleration	α	rad/s^2	7000
Case volume	V	L	3.4
Weight (approx.)	m	kg	101

Note

Operation above the maximum values or below the minimum values may result in a loss of function, a reduced service life or in the destruction of the axial piston unit. Other permissible limit values, such as speed variation, reduced angular acceleration as a function of the frequency and the permissible angular acceleration at start (lower than the maximum angular acceleration) can be found in data sheet RE 90261.

Permissible displacement in relation to speed

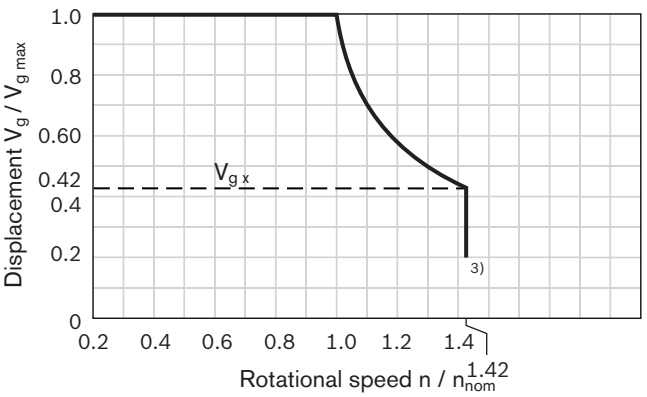

1) The following values apply:
   - For the optimum viscosity range from $\nu_{opt} = 36$ to 16 mm^2/s
   - With hydraulic fluid based on mineral oils
2) Torque without radial force, with radial force see page 8
3) Values in this range on request

Determining the operating characteristics

Input flow $q_v = \dfrac{V_g \cdot n}{1000 \cdot \eta_v}$ [L/min]

Rotational speed $n = \dfrac{q_v \cdot 1000 \cdot \eta_v}{V_g}$ [rpm]

Torque $T = \dfrac{V_g \cdot \Delta p \cdot \eta_{mh}}{20 \cdot \pi}$ [Nm]

Power $P = \dfrac{2\,\pi \cdot T \cdot n}{60000} = \dfrac{q_v \cdot \Delta p \cdot \eta_t}{600}$ [kW]

V_g = Displacement per revolution in cm^3

Δp = Differential pressure in bar

n = Speed in rpm

η_v = Volumetric efficiency

η_{mh} = Mechanical-hydraulic efficiency

η_t = Total efficiency ($\eta_t = \eta_v \cdot \eta_{mh}$)

Technical data

Permissible radial and axial forces of the drive shafts

Size		NG		280	280
Drive shaft				2 1/4	W60
Maximum radial force[1] at distance a(from shaft collar)	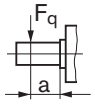	$F_{q\ max}$	N	26821	26913
		a	mm	40	35
with permissible torque		T_{max}	Nm	1916	2005
≙ permissible pressure Δp at $V_{g\ max}$		$p_{nom\ perm.}$	bar	430	450
Maximum axial force[2]	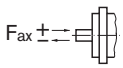	$+ F_{ax\ max}$	N	1575	1575
		$- F_{ax\ max}$	N	0[3]	0[3]
Permissible axial force per bar operating pressure		$F_{ax\ perm./bar}$	N/bar	19.4	19.4

1) With intermittent operation.
2) Maximum permissible axial force during standstill or when the axial piston unit is operating in non-pressurized condition.
3) Please contact us.

Note
Influence of the direction of the permissible axial force:

$+ F_{ax\ max}$ = Increase in service life of bearings
$- F_{ax\ max}$ = Reduction in service life of bearings (avoid)

Effect of radial force F_q on the service life of bearings

By selecting a suitable direction of radial force F_q, the load on the bearings, caused by the internal rotary group forces can be reduced, thus optimizing the service life of the bearings. Recommended position of mating gear is dependent on direction of rotation. Examples:

Toothed gear output drive

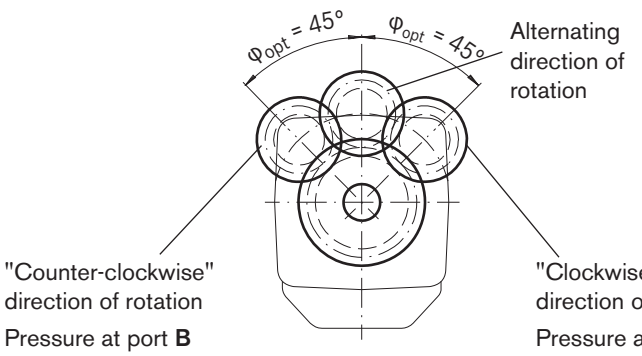

V-belt output

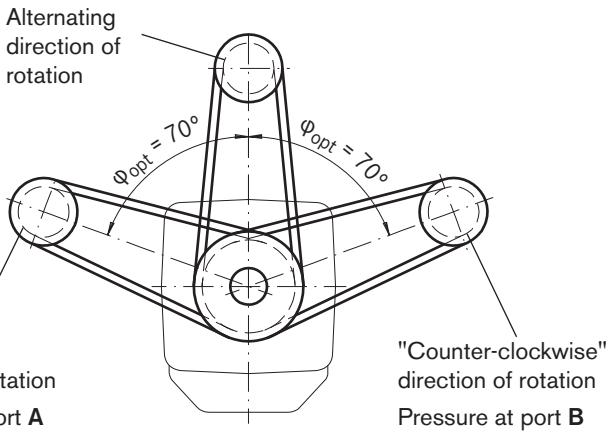

HP – Proportional hydraulic control

The proportional hydraulic control, type HP, provides infinite adjustment of the displacement, proportional to the pilot pressure applied to port X.

HP1, HP2 positive control
- Beginning of control at $V_{g\,min}$ (minimum torque, maximum permissible speed at minimum pilot pressure)
- End of control at $V_{g\,max}$ (maximum torque, minimum speed at maximum pilot pressure)

HP5, HP6 negative control
- Beginning of control at $V_{g\,max}$ (maximum torque, minimum speed at minimum pilot pressure)
- End of control at $V_{g\,min}$ (minimum torque, maximum permissible speed at maximum pilot pressure)

Note
- Maximum permissible pilot pressure: $p_{St} = 100$ bar
- The control oil is internally taken out of the high pressure side of the motor (A or B). For reliable control, an operating pressure of at least 30 bar is required in A (B). If a control operation is performed at an operating pressure < 30 bar, an auxiliary pressure of at least 30 bar must be applied at port G via an external check valve. For lower pressures, please contact us.
  Please note that pressures up to 500 bar can occur at port G.
- Please state the desired beginning of control in plain text when ordering, e. g.: beginning of control at 10 bar.
- The beginning of control and the HP characteristic are influenced by the case pressure. An increase in case pressure causes an increase in the beginning of control (see page 5) and thus a parallel shift of the characteristic.

HP1, HP5 pilot pressure increase $\Delta p_{St} = 10$ bar

HP1 positive control
A pilot pressure increase of 10 bar at port X results in an increase in displacement from $V_{g\,min}$ to $V_{g\,max}$.

HP5 negative control
A pilot pressure increase of 10 bar at port X results in a decrease in displacement from $V_{g\,max}$ to $V_{g\,min}$.

Beginning of control, setting range _____2 to 20 bar

Standard setting:
Beginning of control at 3 bar (end of control at 13 bar)

Note

The spring feedback feature in the control part is not a safety device

The control part can stick in an undefined position by internal contamination (contaminated hydraulic fluid, abrasion or residual contamination from system components). As a result, control of the axial piston motor will no longer respond correctly to the operator's commands.

Check whether the application on your machine requires additional safety measures, in order to bring the driven consumer into a safe position (immediate stop). If necessary, make sure that these are properly implemented.

Characteristic

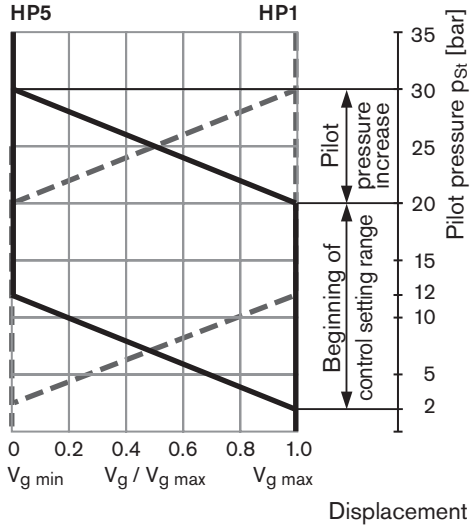

HP2, HP6 pilot pressure increase $\Delta p_{St} = 25$ bar

HP2 positive control
A pilot pressure increase of 25 bar at port X results in an increase in displacement from $V_{g\,min}$ to $V_{g\,max}$.

HP6 negative control
A pilot pressure increase of 25 bar at port X results in a decrease in displacement from $V_{g\,max}$ to $V_{g\,min}$.

Beginning of control, setting range _____5 to 35 bar

Standard setting:
Beginning of control at 10 bar (end of control at 35 bar)

Characteristic

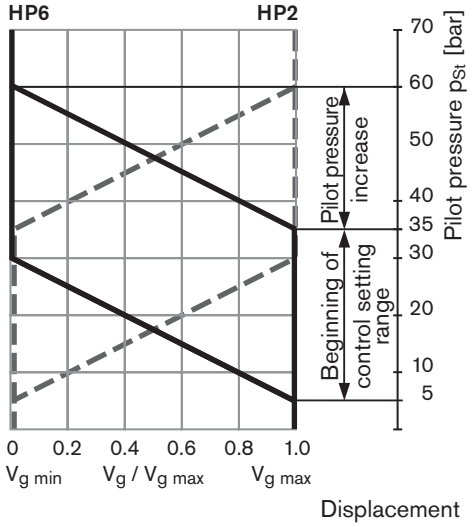

Schematic HP1, HP2: positive control on request.
Schematic HP5, HP6: negative control on request.

HP – Proportional hydraulic control

HP5D1, HP6D1
Pressure control, fixed setting

The pressure control overrides the HP control function. If the load torque or a reduction in motor swivel angle causes the system pressure to reach the setpoint value of the pressure control, the motor will swivel towards a larger displacement.

The increase in the displacement and the resulting reduction in pressure cause the control deviation to decrease. With the increase in displacement the motor develops more torque, while the pressure remains constant.

Setting range of the pressure control valve_____ 80 to 450 bar

Schematic HP5D1, HP6D1: negative control on request.

EP – Proportional electric control

The proportional electric control, type EP, provides infinite adjustment of the displacement, proportional to the control current applied to the solenoid.

EP1, EP2 positive control

– Beginning of control at $V_{g\,min}$ (minimum torque, maximum permissible speed at minimum control current)

– End of control at $V_{g\,max}$ (maximum torque, minimum speed at maximum control current)

EP5, EP6 negative control

– Beginning of control at $V_{g\,max}$ (maximum torque, minimum speed at minimum control current)

– End of control at $V_{g\,min}$ (minimum torque, maximum permissible speed at maximum control current)

Characteristic

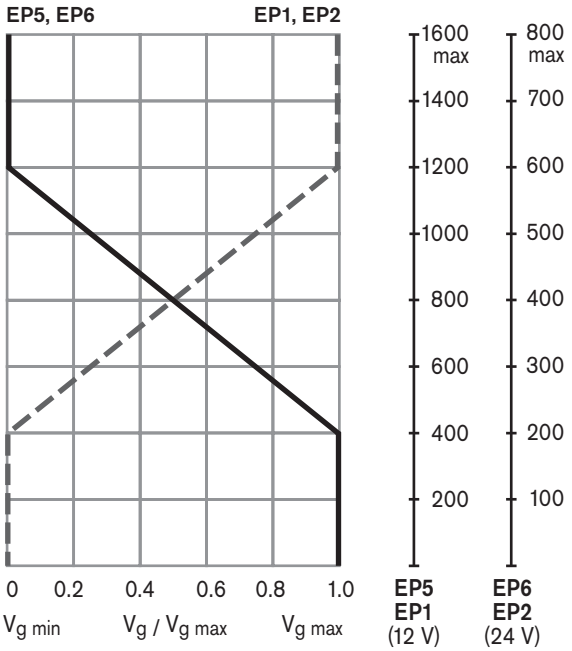

Note

The control oil is internally taken out of the high pressure side of the motor (A or B). For reliable control, an operating pressure of at least 30 bar is required in A (B). If a control operation is performed at an operating pressure < 30 bar, an auxiliary pressure of at least 30 bar must be applied at port G via an external check valve. For lower pressures, please contact us.

Please note that pressures up to 500 bar can occur at port G.

Technical data, solenoid

	EP1, EP5	EP2, EP6
Voltage	12 V (±20 %)	24 V (±20 %)
Control current		
Beginning of control	400 mA	200 mA
End of control	1200 mA	600 mA
Current limit	1.54 A	0.77 A
Nominal resistance (at 20 °C)	5.5 Ω	22.7 Ω
Dither frequency	100 Hz	100 Hz
Duty cycle	100 %	100 %
Type of protection see connector version page 21		

The following electronic controllers and amplifiers are available for controlling the proportional solenoids:

– BODAS RC controller
  Series 20 ____ RE 95200
  Series 21 ____ RE 95201
  Series 22 ____ RE 95202
  Series 30 ____ RE 95203, RE 95204
  and application software

– Analog amplifier RA ____ RE 95230

– Electric amplifier VT 2000, series 5X (see RE 29904) (for stationary application)

Note

The spring feedback feature in the control part is not a safety device

The control part can stick in an undefined position by internal contamination (contaminated hydraulic fluid, abrasion or residual contamination from system components). As a result, control of the axial piston motor will no longer respond correctly to the operator's commands.

Check whether the application on your machine requires additional safety measures, in order to bring the driven consumer into a safe position (immediate stop). If necessary, make sure that these are properly implemented.

Schematic EP1, EP2: positive control

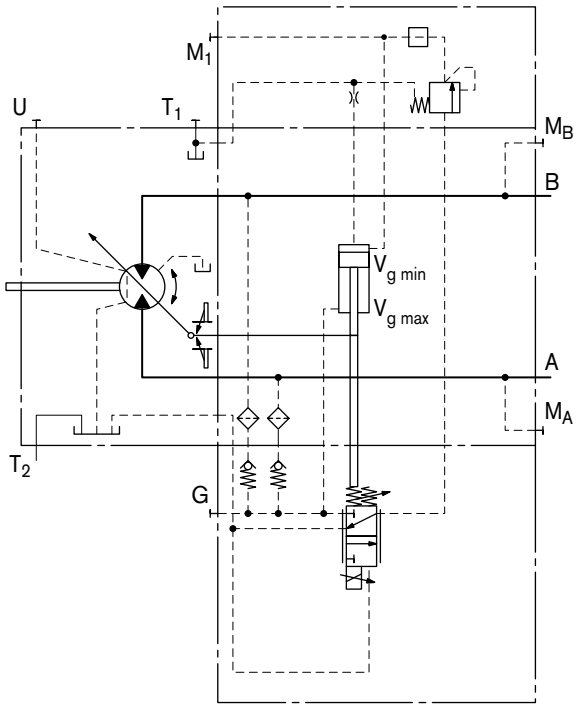

Schematic EP1, EP2: negative control

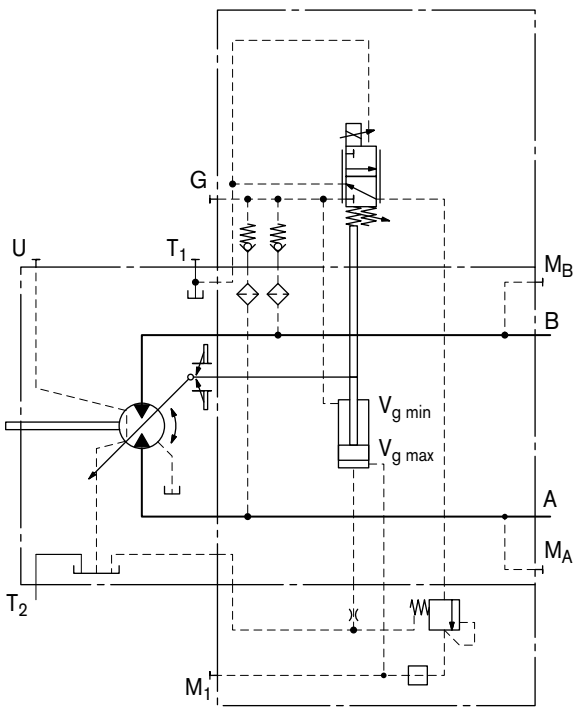

EP5D1, EP6D1
Pressure control, fixed setting

The pressure control overrides the EP control function. If the load torque or a reduction in motor swivel angle causes the system pressure to reach the setpoint value of the pressure control, the motor will swivel towards a larger displacement.

The increase in the displacement and the resulting reduction in pressure cause the control deviation to decrease. With the increase in displacement the motor develops more torque, while the pressure remains constant.

Setting range of the pressure control valve ____ 80 to 450 bar

Schematic EP5D1, EP6D1: negative control

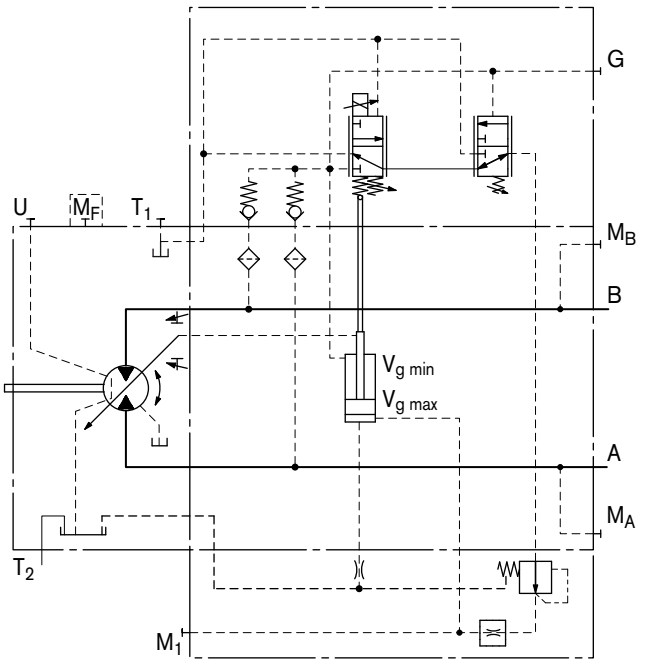

HZ – Two-point hydraulic control

The two-point hydraulic control, type HZ, allows the displacement to be set to either $V_{g\ min}$ or $V_{g\ max}$ by switching the pilot pressure at port X on or off.

HZ5 negative control

– Position at $V_{g\ max}$ (without pilot pressure, maximum torque, minimum speed)

– Position at $V_{g\ min}$ (with pilot pressure > 10 bar activated, minimum torque, maximum permissible speed)

Characteristic HZ5

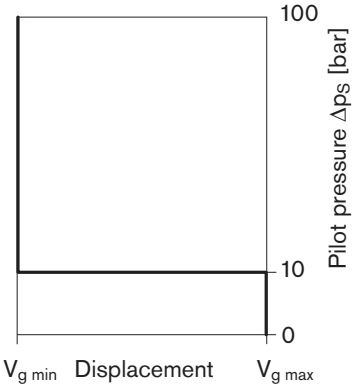

Note

– Maximum permissible pilot pressure: 100 bar

– The control oil is internally taken out of the high pressure side of the motor (A or B). For reliable control, an operating pressure of at least 30 bar is required in A (B). If a control operation is performed at an operating pressure < 30 bar, an auxiliary pressure of at least 30 bar must be applied at port G via an external check valve. For lower pressures, please contact us.
Please note that pressures up to 500 bar can occur at port G.

Schematic HZ5: negative control on request.

EZ – Two-point electric control

The two-point electric control, type EZ, allows the displacement to be set to either $V_{g\ min}$ or $V_{g\ max}$ by switching the electric current to a switching solenoid on or off.

Note
The control oil is internally taken out of the high pressure side of the motor (A or B). For reliable control, an operating pressure of at least 30 bar is required in A (B). If a control operation is performed at an operating pressure < 30 bar, an auxiliary pressure of at least 30 bar must be applied at port G via an external check valve. For lower pressures, please contact us.
Please note that pressures up to 500 bar can occur at port G.

Technical data, solenoid with Ø37
Size 280

	EZ5	EZ6
Voltage	12 V (±20 %)	24 V (±20 %)
Position $V_{g\ max}$	de-energized	de-energized
Position $V_{g\ min}$	energized	energized
Nominal resistance (at 20 °C)	5.5 Ω	21.7 Ω
Nominal power	26.2 W	26.5 W
Minimum required active current	1.32 A	0.67 A
Duty cycle	100 %	100 %
Type of protection see connector version page 21		

Schematic EZ5, EZ6: negative control on request.

HA – Automatic high-pressure related control

The automatic high-pressure related control, type HA, adjusts the displacement automatically depending on the operating pressure.

The displacement of the A6VM motor with HA control is $V_{g\,min}$ (maximum speed and minimum torque). The control device measures internally the operating pressure at A or B (no control line required) and upon reaching the beginning of control , the controller swivels the motor from $V_{g\,min}$ to $V_{g\,max}$ with increase of pressure. The displacement is modulated between $V_{g\,min}$ and $V_{g\,max}$, thereby depending on load conditions.

HA1, HA2 positive control

- Beginning of control at $V_{g\,min}$ (minimum torque, maximum speed)
- End of control at $V_{g\,max}$ (maximum torque, minimum speed)

Note

- For safety reasons, winch drives are not permissible with beginning of control at $V_{g\,min}$ (standard for HA).
- The control oil is internally taken out of the high pressure side of the motor (A or B). For reliable control, an operating pressure of at least 30 bar is required in A (B). If a control operation is performed at an operating pressure < 30 bar, an auxiliary pressure of at least 30 bar must be applied at port G via an external check valve. For lower pressures, please contact us.
  Please note that pressures up to 500 bar can occur at port G.
- The beginning of control and the HA.T3 characteristic are influenced by case pressure. An increase in case pressure causes an increase in the beginning of control (see page 5) and thus a parallel shift of the characteristic.

HA1
With minimum pressure increase, positive control

An operating pressure increase of $\Delta p \leq$ approx. 10 bar results in an increase in displacement from $V_{g\,min}$ towards $V_{g\,max}$.

Beginning of control, setting range _____ 80 to 350 bar

Please state the desired beginning of control in plain text when ordering, e. g.: beginning of control at 300 bar.

Characteristic HA1

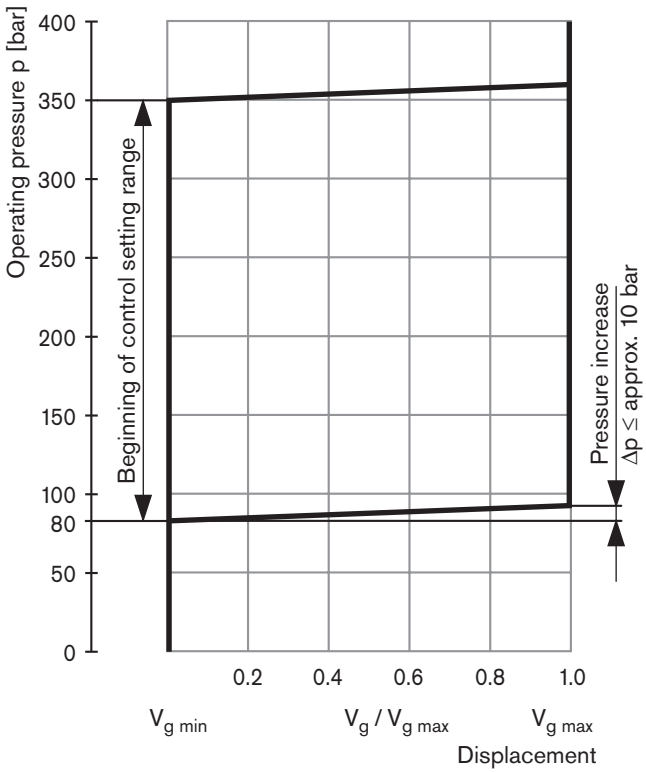

Schematic HA1 on request.

HA – Automatic high-pressure related control

HA2
With pressure increase, positive control

An operating pressure increase of Δp = approx. 100 bar results in an increase in displacement from $V_{g\,min}$ towards $V_{g\,max}$.

Beginning of control, setting range _____ 80 to 350 bar

Please state the desired beginning of control in plain text when ordering, e. g.: beginning of control at 200 bar.

Characteristic HA2

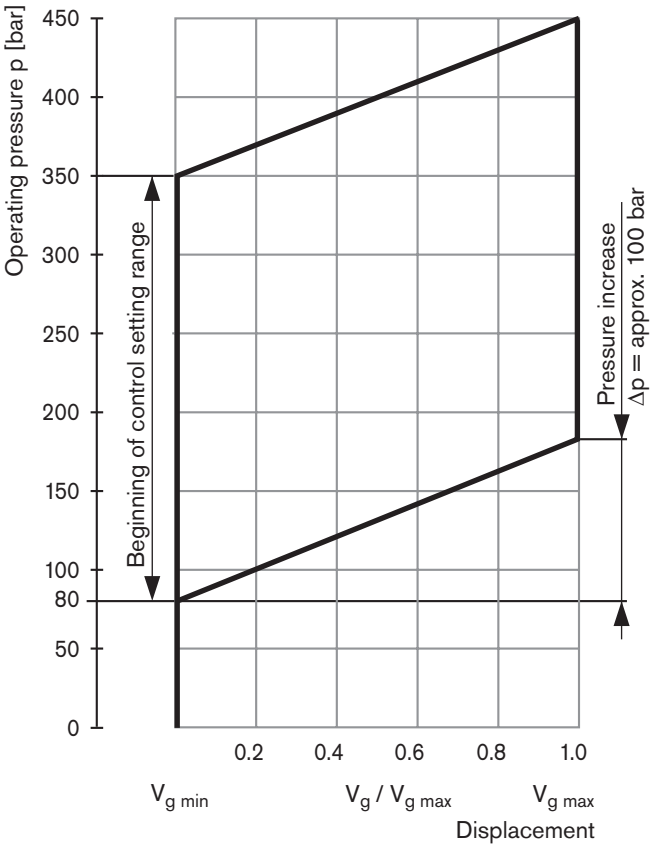

Schematic HA2 on request.

HA.T3
Override, hydraulic remote control, proportional

With the HA.T3 control, the beginning of control can be influenced by applying a pilot pressure to port X.

For each 1 bar of pilot pressure increase, the beginning of control is reduced by 23 bar.

Beginning of control setting	300 bar	300 bar
Pilot pressure at port X	0 bar	10 bar
Beginning of control at	300 bar	70 bar

Note
Maximum permissible pilot pressure 100 bar.

Schematic HA.T3 on request.

DA – Automatic speed-related control

The variable motor A6VM with automatic speed-related control, type DA, is intended for use in hydrostatic travel drives in combination with the variable pump A4VG with DA control.

A pilot pressure generated by the variable pump regulates, together with the operating pressure, the swivel angle of the hydraulic motor.

Increasing pilot pressure causes the motor to swivel to a smaller displacement (lower torque, higher rotational speed), depending on the operating pressure.

If the operating pressure exceeds the pressure setpoint value set on the controller, the variable motor swivels to a larger displacement (higher torque, lower speed).

Pressure ratio p_{St}/p_{HD} _____ 5/100

DA closed loop control is only suitable for certain types of drive systems and requires review of the engine and vehicle parameters to ensure that the motor is used correctly and that machine operation is safe and efficient. We recommend that all DA applications be reviewed by a Bosch Rexroth application engineer.

Note
The beginning of control and the DA characteristic are influenced by case pressure. An increase in case pressure causes a decrease in the beginning of control (see page 5) and thus a parallel shift of the characteristic.

DA0
Hydraulic travel direction valve, negative control

Dimensions size 280

Before finalizing your design, request a binding installation drawing. Dimensions in mm.

EP5, EP6 – Proportional electric control, negative control

Port plate 2 – SAE flange ports A and B at side, opposite

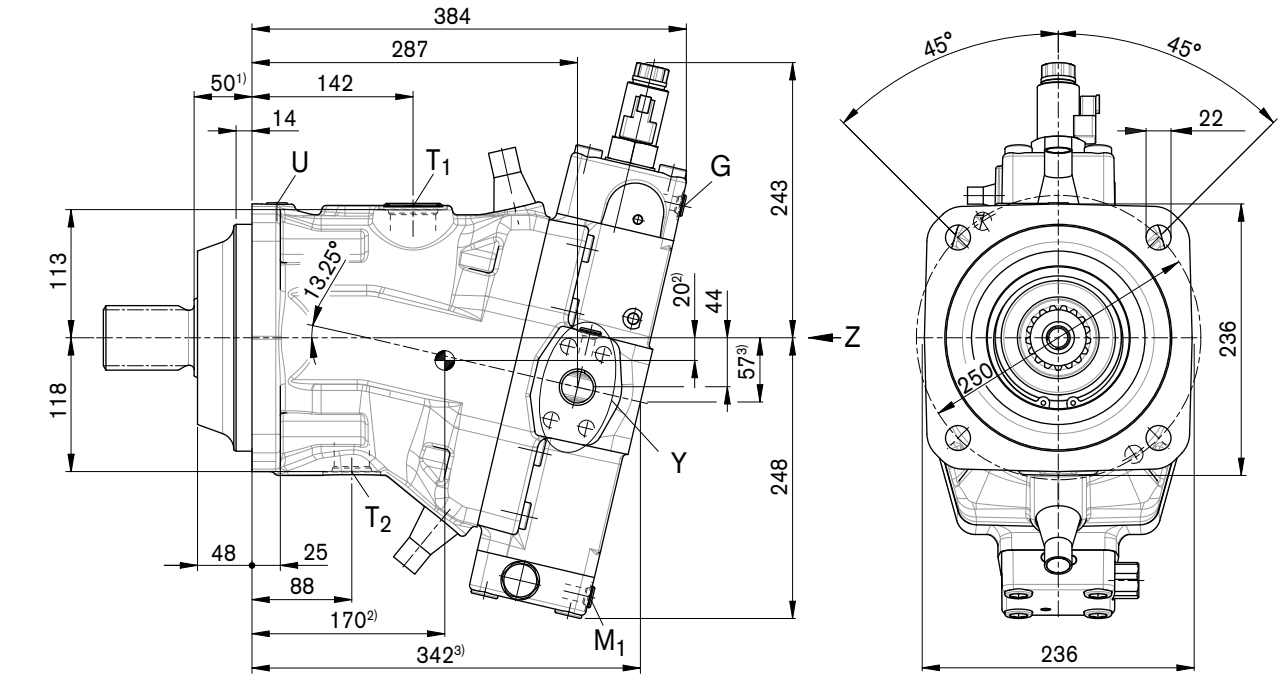

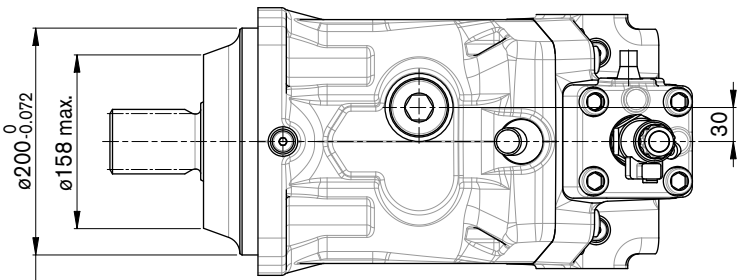

Flansch ISO 3019-2

View Y

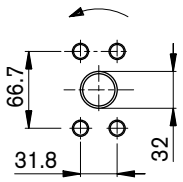

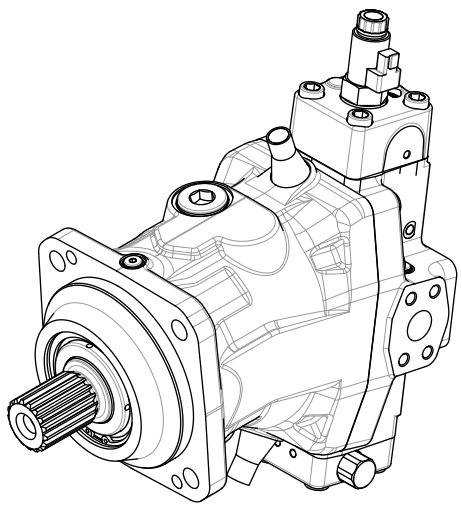

1) To shaft collar
2) Center of gravity
3) Port plate 1 – SAE flange ports A and B at rear

Dimensions size 280

Before finalizing your design, request a binding installation drawing. Dimensions in mm.

Location of the service line ports on the port plates (view Z)

2 SAE flange ports A and B at side, opposite

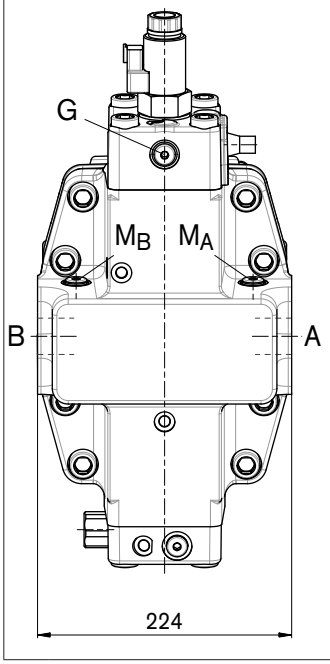

1 SAE flange ports A and B at rear

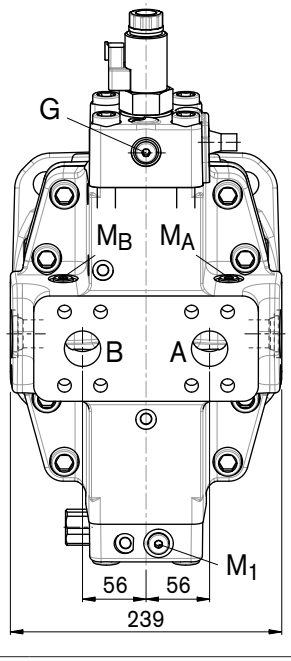

Drive shafts

T3 Splined shaft 2 1/4 in 17 T 8/16DP[1)]

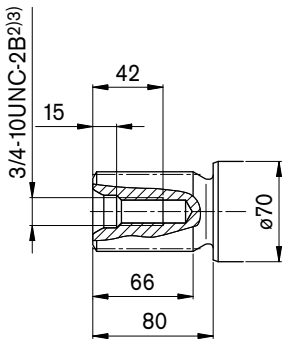

A4 Splined shaft DIN 5480 W60x2x28x9g

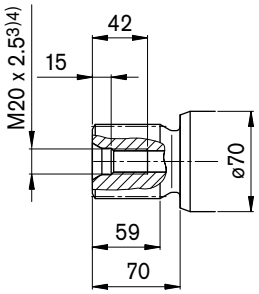

1) ANSI B92.1a, 30° pressure angle, flat root, side fit, tolerance class 5
2) Thread according to ASME B1.1
3) Observe the general instructions on page 26 for the maximum tightening torques
4) Center bore according to DIN 332 (thread according to DIN 13)

Dimensions size 280

Before finalizing your design, request a binding installation drawing. Dimensions in mm.

Ports

Designation	Port for	Standard	Size[1]	p_{max} [bar][2]	State[6]
A, B	Service line fastening thread A/B	SAE J518[3] DIN 13	1 1/4 in M14 x 2; 19 deep	500	O
T_1	Drain line	ISO 6149[5]	M42 x 2; 19.5 deep	3	X[4]
T_2	Drain line	ISO 6149[5]	M33 x 2; 19 deep	3	O[4]
G	Synchronous control	ISO 6149[5]	M14 x 1.5; 11.5 deep	500	X
U	Bearing flushing	ISO 6149[5]	M14 x 1.5; 11.5 deep	3	X
M_1	Measuring stroking chamber	ISO 6149[5]	M14 x 1.5; 11.5 deep	500	X
M_A	Measuring pressure A	ISO 6149[5]	M14 x 1.5; 11.5 deep	500	X
M_B	Measuring pressure B	ISO 6149[5]	M14 x 1.5; 11.5 deep	500	X

1) Observe the general instructions on page 26 for the maximum tightening torques.
2) Momentary pressure spikes may occur depending on the application. Keep this in mind when selecting measuring devices and fittings.
3) Only dimensions according to SAE J518, metric fastening thread is a deviation from standard.
4) Depending on installation position, T_1 or T_2 must be connected (see also installation instructions on page 24).
5) The spot face can be deeper than specified in the appropriate standard.
6) O = Must be connected (plugged on delivery)
X = Plugged (in normal operation)

EP1, EP2

Proportional electric control, positive control

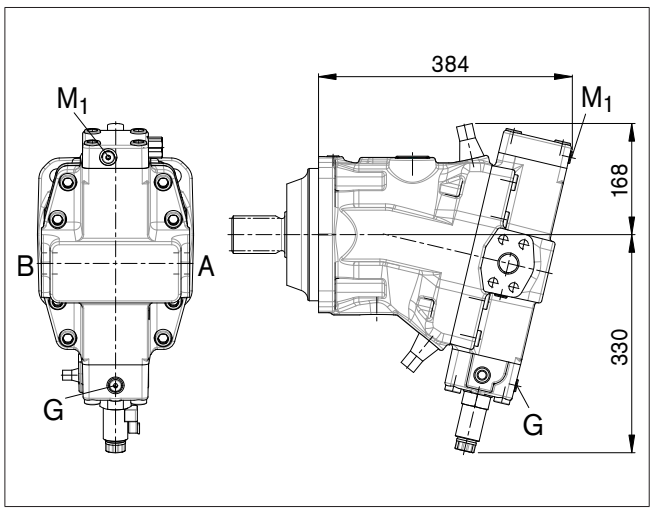

Connector for solenoids

Before finalizing your design, request a binding installation drawing. Dimensions in mm.

DEUTSCH DT04-2P-EP04

Molded connector, 2-pin, without bidirectional suppressor diode

There is the following type of protection with mounted mating connector:
IP67 _____ DIN/EN 60529

and IP69K _____ DIN 40050-9

Circuit symbol

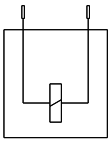

Mating connector

DEUTSCH DT06-2S-EP04
Bosch Rexroth material number R902601804

Consisting of:	DT designation
– 1 housing	DT06-2S-EP04
– 1 wedge	W2S
– 2 sockets	0462-201-16141

The mating connector is not included in the scope of supply. This can be supplied by Bosch Rexroth on request.

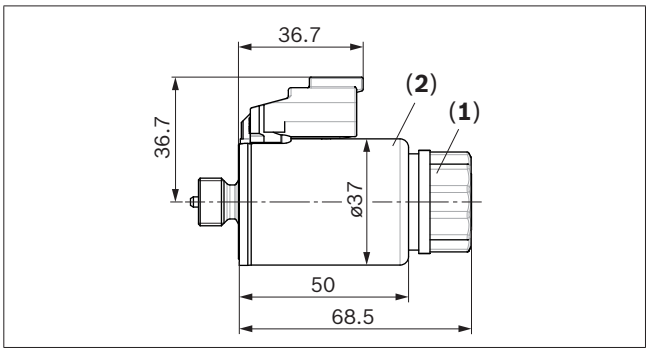

Changing connector orientation

If necessary, you can change the connector orientation by turning the solenoid housing.

To do this, proceed as follows:

1. Loosen the mounting nut (1) of the solenoid. To do this, turn the mounting nut (1) one turn counter-clockwise.
2. Turn the solenoid body (2) to the desired orientation.
3. Retighten the mounting nut. Tightening torque: 5+1 Nm. (size WAF 26, 12 kt DIN 3124)

On delivery, the connector orientation may differ from that shown in the brochure or drawing.

Flushing and boost pressure valve

Before finalizing your design, request a binding installation drawing. Dimensions in mm.

The flushing and boost pressure valve is used to remove heat from the hydraulic circuit.

In an open circuit, it is used only for flushing the housing.

In a closed circuit, it ensures a minimum boost pressure level in addition to the case flushing.

Hydraulic fluid is directed from the respective low pressure side into the motor housing. This is then fed into the reservoir, together with the case drain fluid. The hydraulic fluid, removed out of the closed circuit must be replaced by cooled hydraulic fluid from the boost pump.

The valve is mounted onto the port plate or integrated (depending on the control type and size).

Cracking pressure of pressure retaining valve
(observe when adjusting the primary valve)
adjustable _____ 15 to 35 bar

Switching pressure of flushing spool Δp _____ on request

Flushing flow q_v
(Flushing flow up to 60 L/min possible, please contact us)

For a flushing flow greater than 35 l/min, it is recommended that port S_a be connected in order to prevent an increase in the case pressure. An increased case pressure reduces the flushing flow.

Schematic EP

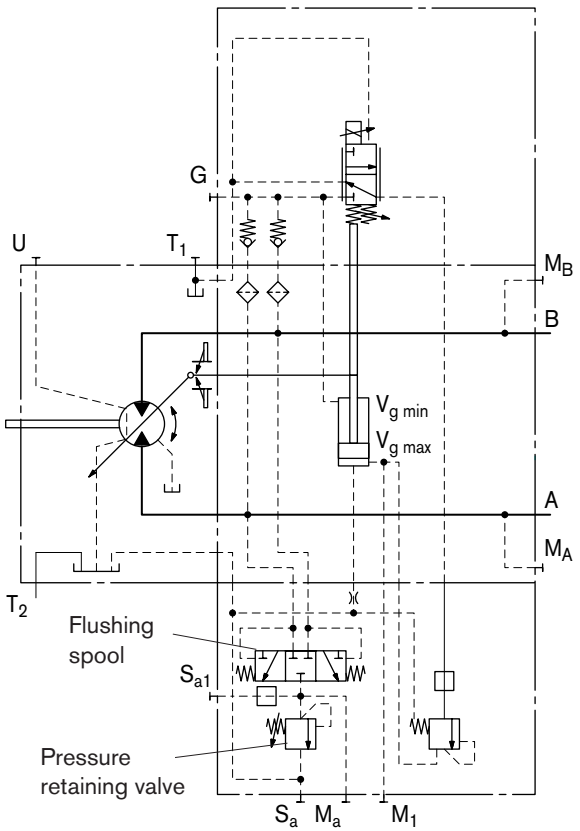

NG	S_a [1)]	S_{a1} [1)]	M_a [1)]
280	M22 x 1.5; 15.5 deep	M14 x 1.5; 11.5 deep	M14 x 1.5; 11.5 deep

1) ISO 6149, ports plugged (in normal operation)
Observe the general instructions on page 26 for the maximum tightening torques.
The spot face can be deeper than specified in the appropriate standard.

Dimensions size 280

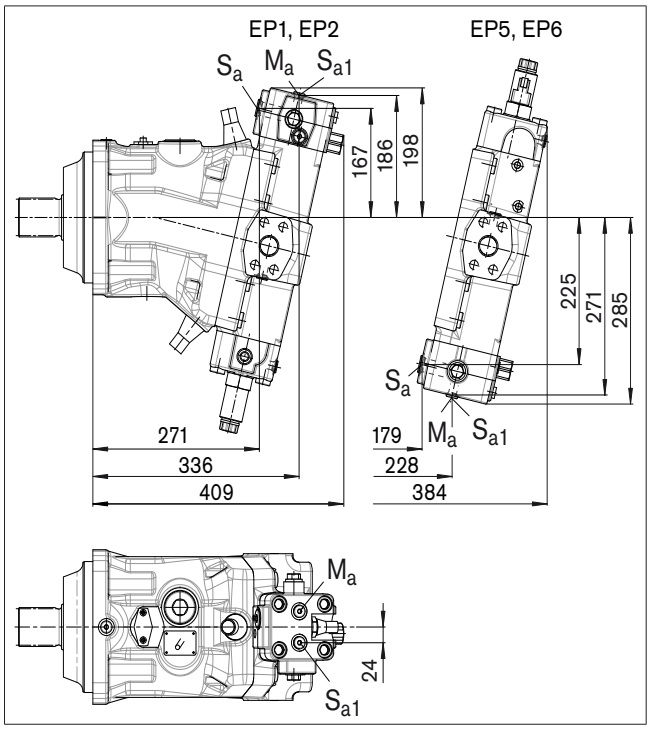

Setting range for displacement

	280			
	$V_{g\,max}$ (cm^3/rev)		$V_{g\,min}$ (cm^3/rev)	
	from	to	from	to
E	280.1	230.0	0.0	55.0
	M16 x 100 R910909811		M16 x 100 R910909811	
F	280.1	230.0	> 55.0	98.0
	M16 x 100 R910909811		M16 x 110 R910909719	
G	280.1	230.0	> 98.0	141.0
	M16 x 100 R910909811		M16 x 120 R910909477	
H	280.1	230.0	> 141.0	184.0
	M16 x 100 R910909811		M16 x 130 R910900271	
J	< 230.0	188.0	0.0	55.0
	M16 x 110 R910909719		M16 x 100 R910909811	
K	< 230.0	188.0	> 55.0	98.0
	M16 x 110 R910909719		M16 x 110 R910909719	
L	< 230.0	188.0	> 98.0	141.0
	M16 x 110 R910909719		M16 x 120 R910909477	
M	< 230.0	188.0	> 141.0	184.0
	M16 x 110 R910909719		M16 x 130 R910900271	

Specify exact settings for $V_{g\,min}$ and $V_{g\,max}$ in plain text when ordering:
$V_{g\,min}$ = ... cm^3, $V_{g\,max}$ = ... cm^3

Theoretical, maximum setting:
for $V_{g\,min} = 0.7 \bullet V_{g\,max}$
for $V_{g\,max} = 0.3 \bullet V_{g\,max}$

Settings that are not listed in the table may lead to damage. Please contact us.

Speed sensor

Before finalizing your design, request a binding installation drawing. Dimensions in mm.

Version A6VM...F ("prepared for speed sensor", i.e. without sensor) is equipped with a spline on the rotary group.

On the version "prepared for speed sensor", the port is plugged with a pressure-resistant cover.

A signal proportional to motor rotational speed can be generated with the mounted HDD speed sensor. The sensors register the speed and direction of rotation.

Ordering code, technical data, dimensions and details on the connector, plus safety instructions about the sensor can be found in the relevant data sheet.

HDD _____ RE 95135

Version "H"

Suitable for mounting the HDD speed sensor. The sensor is flanged onto the port provided for this purpose with two mounting bolts.

We recommend ordering the A6VM variable motor complete with installed sensor.

Schematic

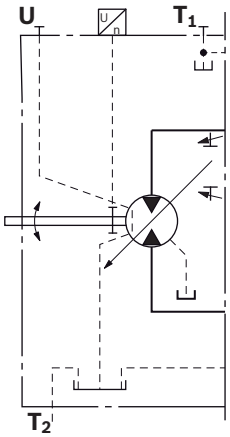

Dimensions

Version "H" with HDD sensor

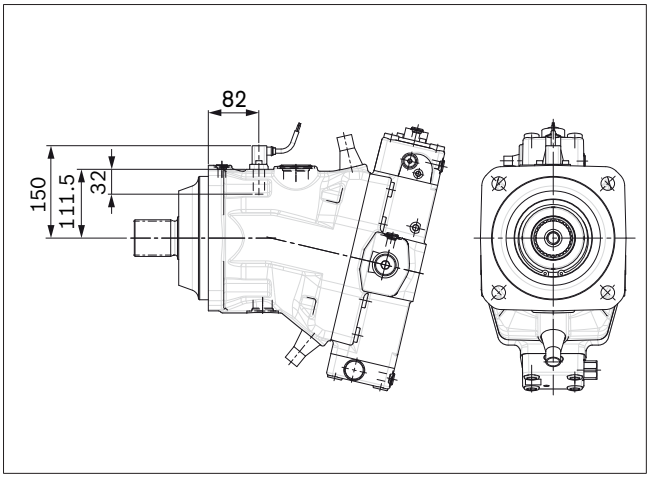

Installation instructions

General

During commissioning and operation, the axial piston unit must be filled with hydraulic fluid and air bled. This must also observed following a relatively long standstill as the axial piston unit may drain back to the reservoir via the hydraulic lines.

Particularly in the installation position "drive shaft upwards" filling and air bleeding via flushing port U must be carried out completely as there is, for example, a danger of dry running.

The case drain fluid in the motor housing must be directed to the reservoir via the highest available drain port (T_1, T_2).

For combinations of multiple units, make sure that the respective case pressure in each unit is not exceeded. In the event of pressure differences at the drain ports of the units, the shared drain line must be changed so that the minimum permissible case pressure of all connected units is not exceeded in any situation. If this is not possible, separate drain lines must be laid if necessary.

To achieve favorable noise values, decouple all connecting lines using elastic elements and avoid above-reservoir installation.

In all operating conditions, the drain line must flow into the reservoir below the minimum fluid level.

Installation position

See the following examples 1 to 8.
Further installation positions are possible upon request.

Recommended installation positions: 1 and 2.

Note
In certain installation positions, an influence on the control characteristics can be expected. Gravity, dead weight and case pressure can cause minor shifts in control characteristics and changes in response time.

Installation position	Air bleed	Filling
1	–	T_1
2	–	T_2
3	–	T_1
4	U	T_1
5	U (L_1)	T_1 (L_1)
6	L_1	T_2 (L_1)
7	L_1	T_1 (L_1)
8	U	T_1 (L_1)

L_1	Filling / air bleed
U	Bearing flushing / air bleed port
T_1, T_2	Drain port
$h_{t\,min}$	Minimum required immersion depth (200 mm)
h_{min}	Minimum required distance to reservoir bottom (100 mm)

Below-reservoir installation (standard)

Below-reservoir installation means that the axial piston unit is installed outside of the reservoir below the minimum fluid level.

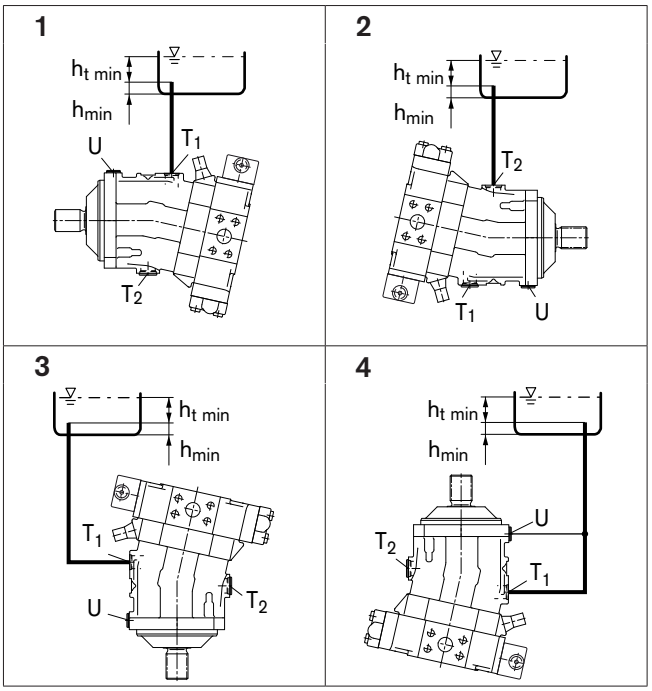

Above-reservoir installation

Above-reservoir installation means that the axial piston unit is installed above the minimum fluid level of the reservoir.

Recommendation for installation position 8 (drive shaft upward): A check valve in the reservoir line (cracking pressure 0.5 bar) can prevent draining of the case interior.

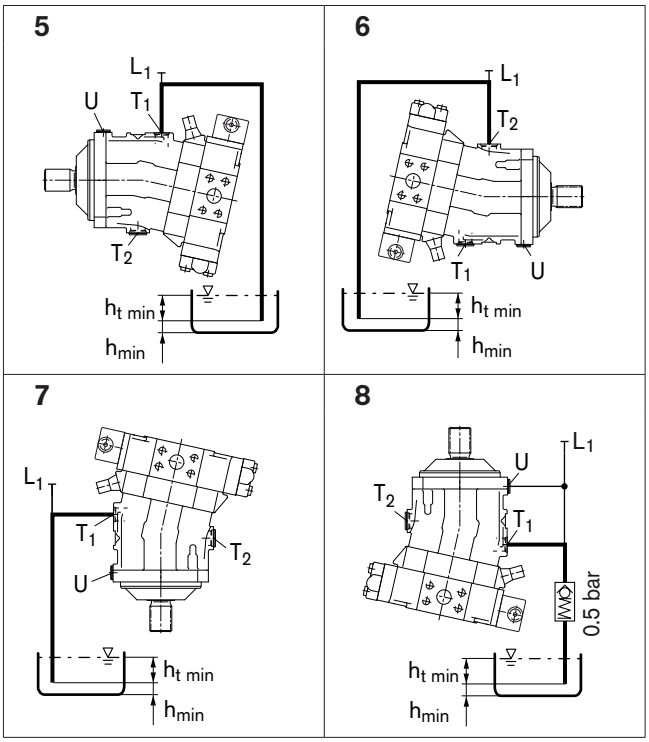

General instructions

– The motor A6VM is designed to be used in open and closed circuits.

– The project planning, installation and commissioning of the axial piston unit requires the involvement of skilled person.

– Before using the axial piston unit, please read the corresponding instruction manual completely and thoroughly. If necessary, these can be requested from Bosch Rexroth.

– During and shortly after operation, there is a risk of burns on the axial piston unit and especially on the solenoids. Take appropriate safety measures (e. g. by wearing protective clothing).

– Depending on the operating conditions of the axial piston unit (operating pressure, fluid temperature), the characteristic may shift.

– Service line ports:

  - The ports and fastening threads are designed for the specified maximum pressure. The machine or system manufacturer must ensure that the connecting elements and lines correspond to the specified application conditions (pressure, flow, hydraulic fluid, temperature) with the necessary safety factors.

  - The service line ports and function ports can only be used to accommodate hydraulic lines.

– The data and notes contained herein must be adhered to.

– Not all variants of the product are approved for use in safety functions according to ISO 13849. Please consult the responsible contact person at Bosch Rexroth if you require reliability parameters (e.g. $MTTF_d$) for functional safety.

– The following tightening torques apply:

  - Fittings:
    Observe the manufacturer's specifications regarding the tightening torques of the fittings used.

  - Mounting bolts:
    For mounting bolts with metric ISO thread according to DIN 13 or with thread according to ASME B1.1, we recommend checking the tightening torque in individual cases as per VDI 2230.

  - Female threads of the axial piston unit:
    The maximum permissible tightening torques $M_{G\ max}$ are maximum values for the female threads and must not be exceeded. For values, see the following table.

  - Threaded plugs:
    For the metallic threaded plugs supplied with the axial piston unit, the required tightening torques of threaded plugs M_V apply. For values, see the following table.

Ports Standard	Thread size	Maximum permissible tightening torque of the female threads $M_{G\ max}$	Required tightening torque of the threaded plugs M_V	WAF hexagon socket for the threaded plugs
ISO 6149	M14 x 1.5	80 Nm	45 Nm	6 mm
	M22 x 1.5	210 Nm	100 Nm	10 mm
	M33 x 2	540 Nm	310 Nm	17 mm
	M42 x 2	720 Nm	330 Nm	22 mm

Rexroth
Bosch Group

Variable Plug-in Motor A6VE

Data sheet

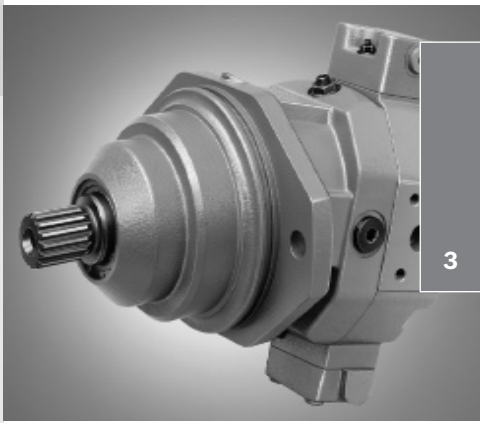

3

Series 63

Size	Nominal pressure/Maximum pressure
28 to 160	400 bar/450 bar
250	350 bar/400 bar

Open and closed circuits

Contents

Ordering code for standard program	2
Technical data	4
HD – Proportional control hydraulic	9
EP – Proportional control electric	12
HZ – Two-point control hydraulic	15
EZ – Two-point control electric	16
HA – Automatic control high-pressure related	17
DA – Automatic control speed-related	21
Electric travel direction valve (for DA)	23
Dimensions 28 to 250	24
Connector for solenoids	28
Flushing and boost pressure valve	29
Counterbalance valve BVD and BVE	31
Counterbalance valve integrated BVI	35
Speed sensor	38
Installation instructions	39
General instructions	40

Features

- Variable plug-in motor with axial tapered piston rotary group of bent-axis design, for hydrostatic drives in open and closed circuits
- Far-reaching integration in mechanical gearbox due to a recessed mounting flange located on the center of the case (extremely space-saving construction)
- Easy to install, simply plug into the mechanical gearbox (no configuration specifications to be observed)
- Tested unit ready to install
- For use especially in mobile applications
- The displacement can be infinitely changed from $V_{g\,max}$ to $V_{g\,min} = 0$.
- The wide control range enables the variable motor to satisfy the requirement for high speed and high torque.
- The output speed is dependent on the flow of the pump and the displacement of the motor.
- The output torque increases with the pressure differential between the high-pressure and low-pressure side and with increasing displacement.

Ordering code for standard program

A6V	E					/	63	W		–	V								
01	02	03	04	05	06		07	08	09		10	11	12	13	14	15	16	17	18

Axial piston unit

01	Bent-axis design, variable	**A6V**

Operating mode

02	Motor, plug-in version	**E**

Sizes (NG)

		28	55	80	107	160	250	
03	Geometric displacement, see table of values on page 7							

	Control devices		28	55	80	107	160	250	
04	Proportional control hydraulic	$\Delta p = 10$ bar	●	●	●	●	●	●	**HD1**
		$\Delta p = 25$ bar	●	●	●	●	●	●	**HD2**
	Two-point control hydraulic		–	–	–	–	–	●	**HZ**
			●	–	–	–	●	–	**HZ1**
			–	●	●	●	●[1]	–	**HZ3**
	Proportional control electric	12 V	●	●	●	●	●	●	**EP1**
		24 V	●	●	●	●	●	●	**EP2**
	Two-point control electric	12 V	●	–	–	–	●	●	**EZ1**
		24 V	●	–	–	–	●	●	**EZ2**
		12 V	–	●	●	●	–	–	**EZ3**
		24 V	–	●	●	●	–	–	**EZ4**
	Automatic control high-pressure related	with minimum pressure increase $\Delta p \leq 10$ bar	●	●	●	●	●	●	**HA1**
		with pressure increase $\Delta p = 100$ bar	●	●	●	●	●	●	**HA2**
		with minimum pressure increase $\Delta p \leq 10$ bar	–	●	●	●	●	–	**HA3**[1]
	Automatic control speed related $p_{St}/p_{HD} = 3/100$, hydraulic travel direction valve		–	–	–	–	–	●	**DA**
	$p_{St}/p_{HD} = 5/100$, electric travel direction valve + electric $V_{g\,max}$-circuit	24 V	●	●	●	●	●	–	**DA3**

Pressure control (only for HD, EP)

05	Without pressure control (without code)	
	Pressure control, fixed setting	**D**

Override of controls HA

06	Without override (without code)	
	Hydraulic override, remote control, proportional	**T**

Series

07	Series 6, index 3	**63**

Direction of rotation

08	Viewed on drive shaft, bidirectional	**W**

	Setting ranges for displacement[2]		28	55	80	107	160	250	
09	$V_{g\,min} = 0$ to 0.7 $V_{g\,max}$ (without code)		●	●	●	●	●	–	
	$V_{g\,min} = 0$ to 0.4 $V_{g\,max}$	$V_{g\,max} = V_{g\,max}$ to 0.8 $V_{g\,max}$	–	–	–	–	–	●	**1**
	$V_{g\,min} > 0.4$ $V_{g\,max}$ to 0.8 $V_{g\,max}$	$V_{g\,max} = V_{g\,max}$ to 0.8 $V_{g\,max}$	–	–	–	–	–	●	**2**

Seals

		28	55	80	107	160	250	
10	FKM (fluor-caoutchouc)	●	●	●	●	●	●	**V**

● = Available ❍ = On request – = Not available ▭ = Preferred program

1) Only possible in combination with port plate 22 (integrated counterbalance valve).

2) Specify exact settings for $V_{g\,min}$ and $V_{g\,max}$ in plain text when ordering: $V_{g\,min} = \ldots$ cm³, $V_{g\,max} = \ldots$ cm³

Ordering code for standard program

A6V	E					/	63	W		–	V								
01	02	03	04	05	06		07	08	09		10	11	12	13	14	15	16	17	18

Drive shafts

		28	55	80	107	160	250	
11	Splined shaft DIN 5480	●	–	●	–	●	–	**A**
		–	●	–	●	–	●	**Z**

Mounting flanges

			28	55	80	107	160	250	
12	Similar to ISO 3019-2	2-hole	●	●	●	●	●	–	**L**
		4-hole	–	–	–	–	–	●	**M**
	Modified adapter flange	2-hole	–	–	–	●	–	–	**U**

Port plates for service lines[3]

					28	55	80	107	160	250	
13	SAE flange ports A and B at side, opposite		**02**	**0**	●	●	●	●	●	●	**020**
				7	●	●	●	●	●	●	**027**
	SAE flange ports A and B at bottom only with integrated counterbalance valve BVI[4]		**22**	**1**	–	●	●	●	●	–	**221**
				2	–	●	●	●	●	–	**222**
	Port plate with 1-level pressure-relief valves for mounting a counterbalance valve[5)7)]	BVD	**37**	**0**	–	–	–	●	–	–	**370** **378**
			38	**8**	–	●	●	●	●	●[9)]	**380**
		BVE	**38**		–	–	–	●	●	–[9)]	**388**

Valves (see pages 29 to 37)

14	Without valve		**0**
	Brake release valve integrated (pilot pressure for brake release)	internal ducting	**1**
		external piping	**2**
	Flushing and boost pressure valve mounted		**7**
	Counterbalance valve mounted[6)7)]		**8**

Speed sensor (see page 38)

		28	55	80	107	160	250	
15	Without speed sensor	●	●	●	●	●	●	**0**
	Prepared for DSA speed sensor	❍	❍	❍	❍	❍	❍	**U**
	DSA speed sensor mounted[8)]	❍	❍	❍	❍	❍	❍	**V**

Connector for solenoids (see page 28)

		28 to 160	250	
16	Without connector (without solenoid, only with hydraulic controls)	●	–	**0**
	(size 250 without code)	–	●	
	DEUTSCH – molded connector, 2-pin – without suppressor diode	●	–	**P**
	HIRSCHMANN connector – without suppressor diode (without code)	–	●	

Beginning of control

			28	55	80	107	160	250	
17	Port plate 02, 37, 38	at $V_{g\,min}$ (standard for HA)	●	●	●	●	●	●	**A**
		at $V_{g\,max}$ (standard for HD, HZ, EP, EZ, DA)	●	●	●	●	●	●	**B**
	Port plate 22	at $V_{g\,min}$ (standard for HA3)	–	●	●	●	●	–	**B**
		at $V_{g\,max}$ (standard for HZ3)	–	●	●	●	●	–	**B**

Standard / special version

18	Standard version (without code)	
	Standard version with installation variants (e. g. T ports against standard open or closed)	**-Y**
	Special version	**-S**

● = Available ❍ = On request – = Not available ▭ = Preferred program

3) Metric fastening thread
4) Only for HZ3 and HA3. Add specification of integrated counterbalance valve BVI, see separate ordering code on page 35. Note the restrictions on page 36.
5) Only possible in conjunction with HD, EP and HA1 and HA2 control
6) Specify ordering code of counterbalance valve according to data sheet (BVD – RE 95522, BVE - RE 95525) separately.
7) Note the restrictions on page 32.
8) Specify ordering code of sensor according to data sheet (DSA – RE 95133) separately and observe the requirements on the electronics.
9) Counterbalance valve MHB32, please contact us.

Technical data

Hydraulic fluid

Before starting project planning, please refer to our data sheets RE 90220 (mineral oil), RE 90221 (environmentally acceptable hydraulic fluids), RE 90222 (HFD hydraulic fluids) and RE 90223 (HFA, HFB, HFC hydraulic fluids) for detailed information regarding the choice of hydraulic fluid and application conditions.

The variable motor A6VE is not suitable for operation with HFA hydraulic fluid. If HFB, HFC, or HFD or environmentally acceptable hydraulic fluids are used, the limitations regarding technical data or other seals must be observed.

Selection diagram

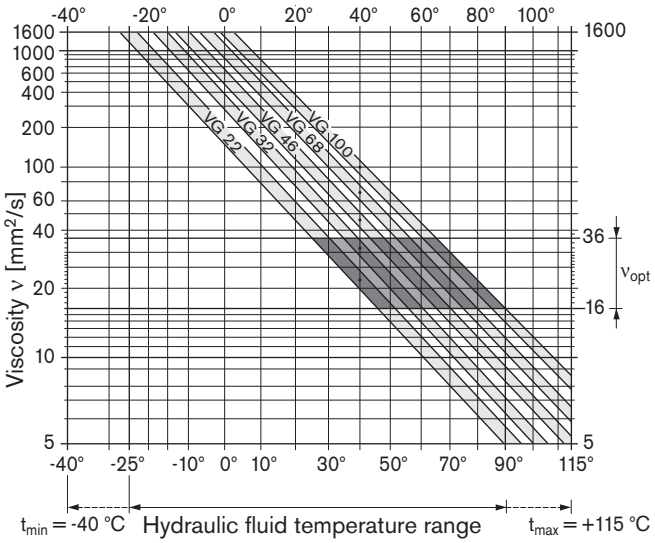

Details regarding the choice of hydraulic fluid

The correct choice of hydraulic fluid requires knowledge of the operating temperature in relation to the ambient temperature: in a closed circuit, the circuit temperature, in an open circuit, the reservoir temperature.

The hydraulic fluid should be chosen so that the operating viscosity in the operating temperature range is within the optimum range (ν_{opt} see shaded area of the selection diagram). We recommended that the higher viscosity class be selected in each case.

Example: At an ambient temperature of X °C, an operating temperature of 60 °C is set in the circuit. In the optimum viscosity range ($\nu_{opt.}$, shaded area) this corresponds to the viscosity classes VG 46 or VG 68; to be selected: VG 68.

Note

The case drain temperature, which is affected by pressure and speed, can be higher than the circuit temperature or reservoir temperature. At no point of the component may the temperature be higher than 115 °C. The temperature difference specified below is to be taken into account when determining the viscosity in the bearing.

If the above conditions cannot be maintained due to extreme operating parameters, we recommend flushing the case with a flushing and boost pressure valve (see page 29).

Viscosity and temperature of hydraulic fluid

	Viscosity [mm²/s]	Temperature	Comment
Transport and storage at ambient temperature		$T_{min} \geq$ -50 °C T_{opt} = +5 °C to +20 °C	factory preservation: up to 12 months with standard, up to 24 months with long-term
(Cold) start-up[1]	ν_{max} = 1600	$T_{St} \geq$ -40 °C	t ≤ 3 min, without load (p ≤ 50 bar), n ≤ 1000 rpm (sizes 28 to 160), n ≤ 0.25 • n_{nom} (size 250)
Permissible temperature difference		ΔT ≤ 25 K	between axial piston unit and hydraulic fluid
Warm-up phase	ν < 1600 to 400	T = -40 °C to -25 °C	At p ≤ 0.7 • p_{nom}, n ≤ 0.5 • n_{nom} and t ≤ 15 min
Operating phase			
Temperature difference		ΔT = approx. 12 K	between hydraulic fluid in the bearing and at port T.
Maximum temperature		115 °C	in the bearing
		103 °C	measured at port T
Continuous operation	ν = 400 to 10 ν_{opt} = 36 to 16	T = -25 °C to +90 °C	measured at port T, no restriction within the permissible data
Short-term operation[2]	$\nu_{min} \geq$ 7	T_{max} = +103 °C	measured at port T, t < 3 min, p < 0.3 • p_{nom}
FKM shaft seal[1]		T ≤ +115 °C	see page 5

1) At temperatures below -25 °C, an NBR shaft seal is required (permissible temperature range: -40 °C to +90 °C).
2) Size 250, please contact us.

Filtration of the hydraulic fluid

Finer filtration improves the cleanliness level of the hydraulic fluid, which increases the service life of the axial piston unit.

To ensure the functional reliability of the axial piston unit, a gravimetric analysis of the hydraulic fluid is necessary to determine the amount of solid contaminant and to determine the cleanliness level according to ISO 4406. A cleanliness level of at least 20/18/15 is to be maintained.

At very high hydraulic fluid temperatures (90 °C to maximum 115 °C), a cleanliness level of at least 19/17/14 according to ISO 4406 is necessary.

If the above classes cannot be achieved, please contact us.

Shaft seal

Permissible pressure loading

The service life of the shaft seal is influenced by the speed of the axial piston unit and the case drain pressure (case pressure). The mean differential pressure of 2 bar between the case and the ambient pressure may not be enduringly exceeded at normal operating temperature. For a higher differential pressure at reduced speed, see diagram. Momentary pressure spikes ($t < 0.1$ s) of up to 10 bar are permitted. The service life of the shaft seal decreases with an increase in the frequency of pressure spikes.

The case pressure must be equal to or higher than the ambient pressure.

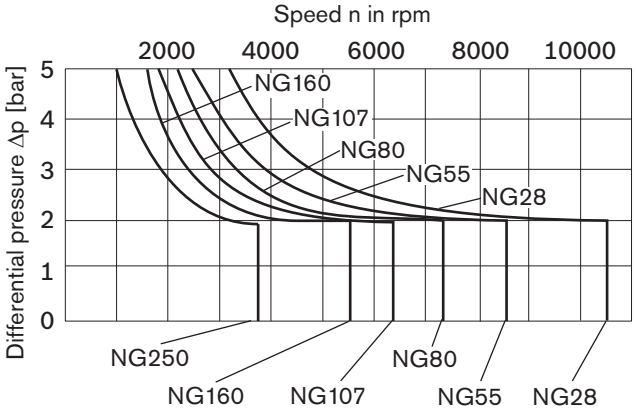

The values are valid for an ambient pressure $p_{abs} = 1$ bar.

Temperature range

The FKM shaft seal may be used for case drain temperatures from -25 °C to +115 °C.

Note
For application cases below -25 °C, an NBR shaft seal is required (permissible temperature range: -40 °C to +90 °C).
State NBR shaft seal in plain text when ordering.
Please contact us.

Influence of case pressure on beginning of control

An increase in case pressure affects the beginning of control of the variable motor when using the following control options:

HD, HA.T (sizes 28 to 160) _____ increase
HD, EP, HA, HA.T (size 250) _____ increase
DA _____ decrease

With the following controls, an increase in the case pressure has no influence on the beginning of control:
EP, HA (sizes 28 to 160)

The factory settings for the beginning of control are made at $p_{abs} = 2$ bar (sizes 28 to 160) or $p_{abs} = 1$ bar (size 250) case pressure.

Direction of flow

Direction of rotation, viewed on drive shaft	
cw	**ccw**
A to **B**	**B** to **A**

Technical data

Operating pressure range

(operating with mineral oil)

Pressure at service line port A or B

Sizes 28 to 160

Nominal pressure p_{nom} _____ 400 bar absolute

Maximum pressure p_{max} _____ 450 bar absolute
Single operating period _____ 10 s
Total operating period _____ 300 h

Size 250

Nominal pressure p_{nom} _____ 350 bar absolute

Maximum pressure p_{max} _____ 400 bar absolute
Single operating period _____ 10 s
Total operating period _____ 300 h

Minimum pressure (high-pressure side) ___25 bar absolute

Summation pressure (pressure A + pressure B) p_{Su} _ 700 bar

Rate of pressure change $R_{A\,max}$
with integrated pressure-relief valve _____ 9000 bar/s
without pressure-relief valve _____ 16000 bar/s

Minimum pressure – pump mode (inlet)
To prevent damage to the axial piston motor in pump operation mode (change of high-pressure side with unchanged direction of rotation, e. g. when braking), a minimum pressure must be guaranteed at the service line port (inlet). This minimum pressure is dependent on the speed and displacement of the axial piston unit (see characteristic curve below).

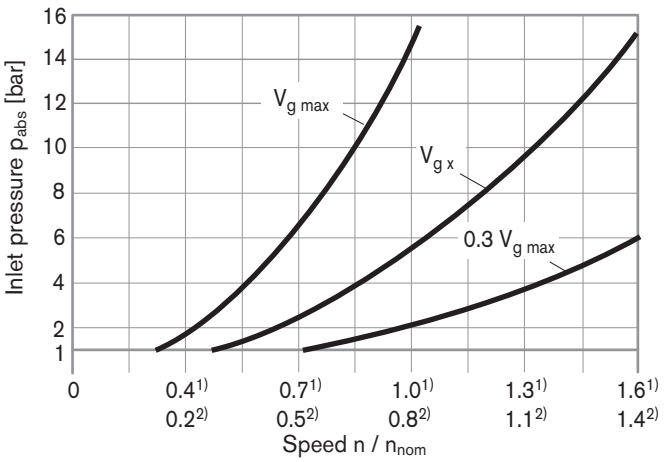

[1] For sizes 28 to 160
[2] For size 250

This diagram is valid only for the optimum viscosity range from ν_{opt} = 36 to 16 mm²/s.
Please contact us if the above conditions cannot be satisfied.

Note
Values for other hydraulic fluids, please contact us.

Definition

Nominal pressure p_{nom}
The nominal pressure corresponds to the maximum design pressure.

Maximum pressure p_{max}
The maximum pressure corresponds to the maximum operating pressure within the single operating period. The sum of the single operating periods must not exceed the total operating period.

Minimum pressure (high-pressure side)
Minimum pressure at the high-pressure side (A or B) which is required in order to prevent damage to the axial piston unit.

Summation pressure p_{Su}
The summation pressure is the sum of the pressures at both service line ports (A and B).

Rate of pressure change R_A
Maximum permissible rate of pressure rise and reduction during a pressure change over the entire pressure range.

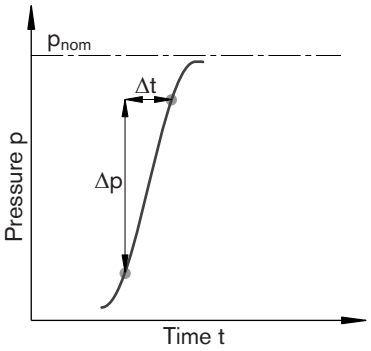

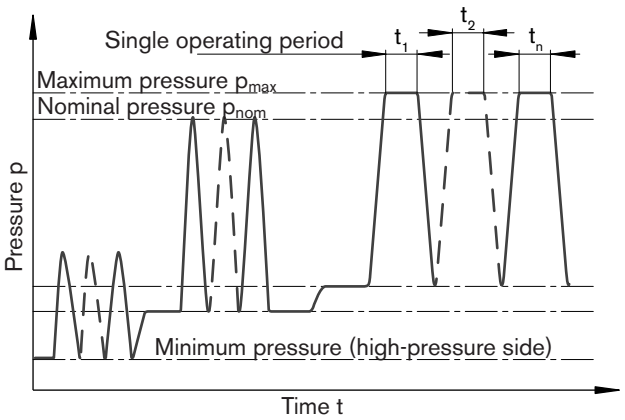

Total operating period = $t_1 + t_2 + \ldots + t_n$

Technical data

Table of values (theoretical values, without efficiency and tolerances; values rounded)

Size		NG	28	55	80	107	160	250
Displacement geometric[1], per revolution	$V_{g\,max}$	cm^3	28.1	54.8	80	107	160	250
	$V_{g\,min}$	cm^3	0	0	0	0	0	0
	$V_{g\,x}$	cm^3	18	35	51	68	61	188
Speed maximum[2] (while adhering to the maximum permissible input flow)								
at $V_{g\,max}$	n_{nom}	rpm	5550	4450	3900	3550	3100	2700
At $V_g < V_{g\,x}$ (see diagram below)	n_{max}	rpm	8750	7000	6150	5600	4900	3600
at $V_{g\,0}$	n_{max}	rpm	10450	8350	7350	6300	5500	3600
Input flow[3]								
at n_{nom} and $V_{g\,max}$	$q_{V\,max}$	L/min	156	244	312	380	496	675
Torque[4]								
At $V_{g\,max}$ and $\Delta p = 400$ bar	T	Nm	179	349	509	681	1019	–
At $V_{g\,max}$ and $\Delta p = 350$ bar	T	Nm	157	305	446	596	891	1391
Rotary stiffness								
$V_{g\,max}$ to $V_{g/2}$	c_{min}	KNm/rad	6	10	16	21	35	60
$V_{g/2}$ to 0 (interpolated)	c_{max}	KNm/rad	18	32	48	65	105	181
Moment of inertia for rotary group	J_{GR}	kgm^2	0.0014	0.0042	0.008	0.0127	0.0253	0.061
Maximum angular acceleration	α	rad/s^2	47000	31500	24000	19000	11000	10000
Case volume	V	L	0.5	0.75	1.2	1.5	2.4	3.0
Mass (approx.)								
Port plate 02, 37, 38	m	kg	16	26	34	47	64	90
Port plate 22	m	kg	–	35	43	53	72	–

1) The minimum and maximum displacement are infinitely adjustable, see ordering code, page 2.
(standard setting for size 250 if not specified in the order: $V_{g\,min} = 0.2 \bullet V_{g\,max}$, $V_{g\,max} = V_{g\,max}$).

2) The values are valid:
- for the optimum viscosity range from $\nu_{opt} = 36$ to 16 mm^2/s
- with hydraulic fluid based on mineral oils

3) Restriction of input flow with counterbalance valve, see page 32

4) Torque without radial force, with radial force see page 8

Note

Operation above the maximum values or below the minimum values may result in a loss of function, a reduced service life or in the destruction of the axial piston unit. Other permissible limit values, with respect to speed variation, reduced angular acceleration as a function of the frequency and the permissible startup angular acceleration (lower than the maximum angular acceleration) can be found in data sheet RE 90261.

Permissible displacement in relation to speed

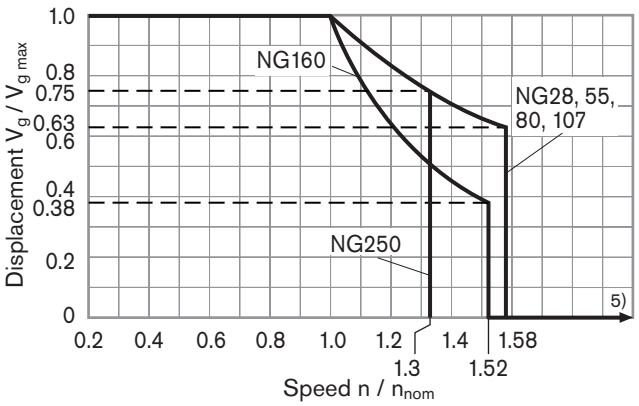

5) Values in this range on request

Technical data

Permissible radial and axial forces of the drive shafts

Size		NG		28	55	80	107	160	250
Drive shaft		ø	mm	30	30	40	40	50	50
Maximum radial force[1] at distance a (from shaft collar)	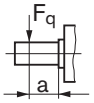	$F_{q\,max}$	N	4838	7581	10283	13758	16435	1200[3]
		a	mm	17.5	17.5	22.5	22.5	27.5	41
with permissible torque		T_{max}	Nm	179	281	509	681	1019	[4]
≙ Permissible pressure Δp at $V_{g\,max}$		$p_{nom\,perm.}$	bar	400	322	400	400	400	[4]
Maximum axial force[2]	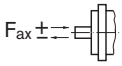	$+F_{ax\,max}$	N	315	500	710	900	1120	1200
		$-F_{ax\,max}$	N	0	0	0	0	0	0
Permissible axial force per bar operating pressure		$F_{ax\,perm./bar}$	N/bar	4.6	7.5	9.6	11.3	15.1	[4]

1) With intermittent operation.
2) Maximum permissible axial force during standstill or when the axial piston unit is operating in non-pressurized condition.
3) When at a standstill or when axial piston unit operating in non-pressurized conditions. Higher forces are permissible when under pressure, please contact us.
4) Please contact us.

Note
Influence of the direction of the permissible axial force:

$+F_{ax\,max}$ = Increase in service life of bearings
$-F_{ax\,max}$ = Reduction in service life of bearings (avoid)

Effect of radial force F_q on the service life of bearings

By selecting a suitable direction of radial force F_q, the load on the bearings, caused by the internal rotary group forces can be reduced, thus optimizing the service life of the bearings. Recommended position of mating gear is dependent on direction of rotation. Examples:

Toothed gear drive

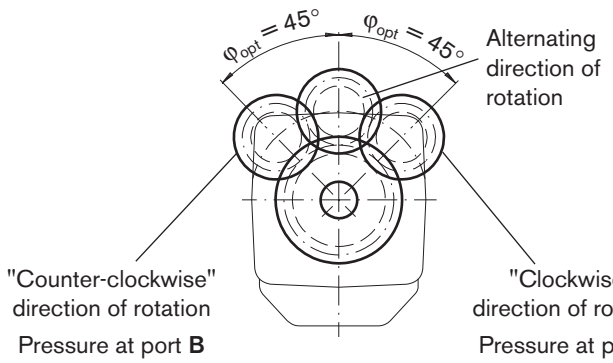

V-belt drive

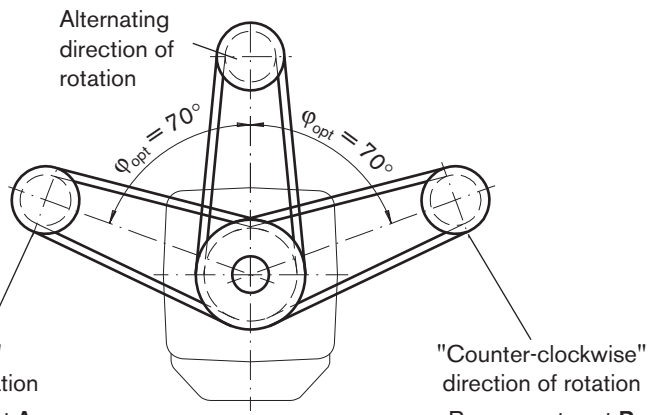

Determining the operating characteristics

Input flow $q_v = \frac{V_g \cdot n}{1000 \cdot \eta_v}$ [L/min]

Speed $n = \frac{q_V \cdot 1000 \cdot \eta_v}{V_g}$ [min^{-1}]

Torque $T = \frac{V_g \cdot \Delta p \cdot \eta_{mh}}{20 \cdot \pi}$ [Nm]

Power $P = \frac{2\,\pi \cdot T \cdot n}{60000} = \frac{q_v \cdot \Delta p \cdot \eta_t}{600}$ [kW]

V_g = Displacement per revolution in cm^3
Δp = Differential pressure in bar
n = Speed in rpm
η_v = Volumetric efficiency
η_{mh} = Mechanical-hydraulic efficiency
η_t = Total efficiency ($\eta_t = \eta_v \cdot \eta_{mh}$)

HD – Proportional control hydraulic

The proportional hydraulic control provides infinite setting of the displacement, proportional to the pilot pressure applied to port X.

– Beginning of control at $V_{g\,max}$ (maximum torque, minimum speed at minimum pilot pressure)

– End of control at $V_{g\,min}$ (minimum torque, maximum permissible speed at maximum pilot pressure)

Note

– Maximum permissible pilot pressure: $p_{St} = 100$ bar

– The control oil is internally taken out of the high-pressure side of the motor (A or B). For reliable control, an operating pressure of at least 30 bar is required in A (B). If a control operation is performed at an operating pressure < 30 bar, an auxiliary pressure of at least 30 bar must be applied at port G via an external check valve. For lower pressures, please contact us.
Please note that pressures up to 450 bar can occur at port G.

– Please state the desired beginning of control in plain text when ordering, e. g.: beginning of control at 10 bar.

– The beginning of control and the HD characteristic are influenced by the case pressure. An increase in case pressure causes an increase in the beginning of control (see page 5) and thus a parallel shift of the characteristic.

– A leakage flow of maximum 0.3 L/min can escape at port X due to internal leakage (operating pressure > pilot pressure). The control is to be suitably configured to avoid an independent build-up of pilot pressure.

HD1
Pilot pressure increase $\Delta p_{St} = 10$ bar

A pilot pressure increase of 10 bar at port X results in a decrease in displacement from $V_{g\,max}$ to 0 cm³ (sizes 28 to 160) or from $V_{g\,max}$ to 0.2 $V_{g\,max}$ (size 250).

Beginning of control, setting range _____2 to 20 bar

Standard setting:
Beginning of control at 3 bar (end of control at 13 bar)

HD1 characteristic

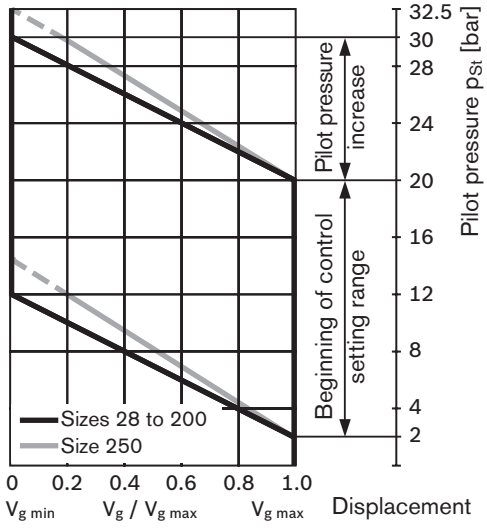

HD2
Pilot pressure increase $\Delta p_{St} = 25$ bar

A pilot pressure increase of 25 bar at port X results in a decrease in displacement from $V_{g\,max}$ to 0 cm³ (sizes 28 to 160) or from $V_{g\,max}$ to 0.2 $V_{g\,max}$ (size 250).

Beginning of control, setting range _____5 to 35 bar

Standard setting:
Beginning of control at 10 bar (end of control at 35 bar)

HD2 characteristic

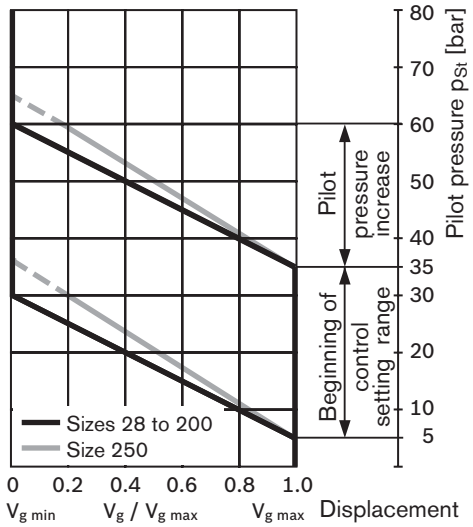

HD – Proportional control hydraulic

Schematic HD1, HD2
Sizes 28 to 160

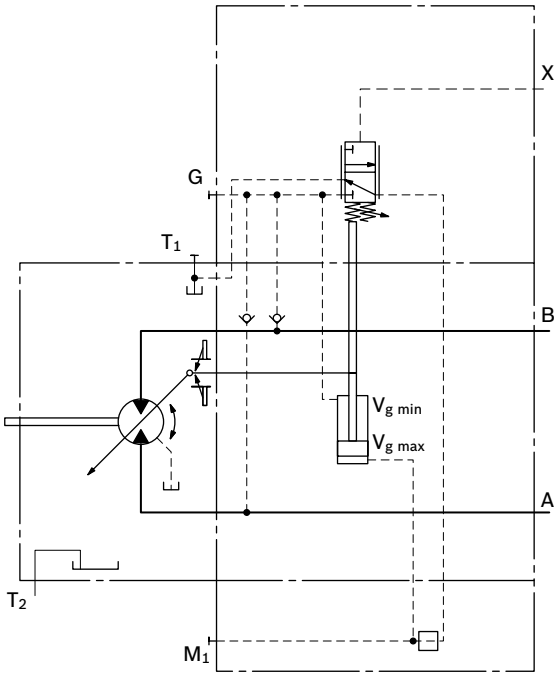

Schematic HD1, HD2
Size 250

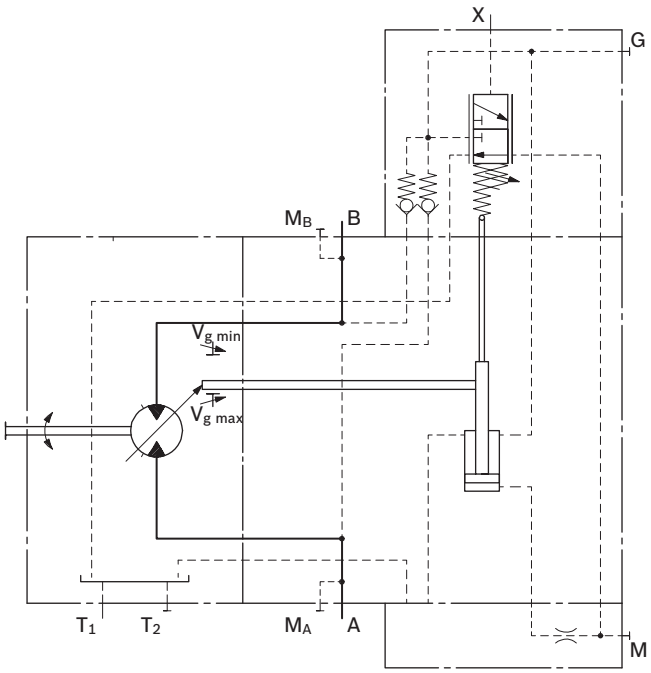

Note

The spring return feature in the control part is not a safety device

The control part can stick in an undefined position by internal contamination (contaminated hydraulic fluid, abrasion or residual contamination from system components). As a result, the control will no longer respond correctly to the operator's commands.

Check whether the application on your machine requires additional safety measures, in order to bring the driven actuator into a controlled and safe position (immediate stop). If necessary, make sure these are properly implemented.

HD.D
Pressure control, fixed setting

The pressure control overrides the HD control function. If the load torque or a reduction in motor swivel angle causes the system pressure to reach the setpoint of the pressure control, the motor will swivel towards a larger displacement.

The increase in the displacement and the resulting reduction in pressure cause the control deviation to decrease. With the increase in displacement the motor develops more torque, while the pressure remains constant.

Setting range of the pressure control valve
Sizes 28 to 160 _____ 80 to 400 bar
Size 250 _____ 80 to 350 to bar

Schematic HD.D
Sizes 28 to 160

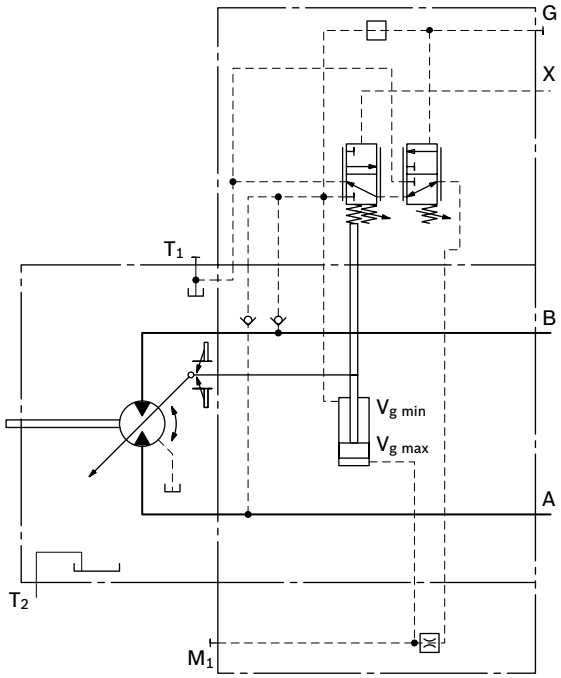

Schematic HD.D
Size 250

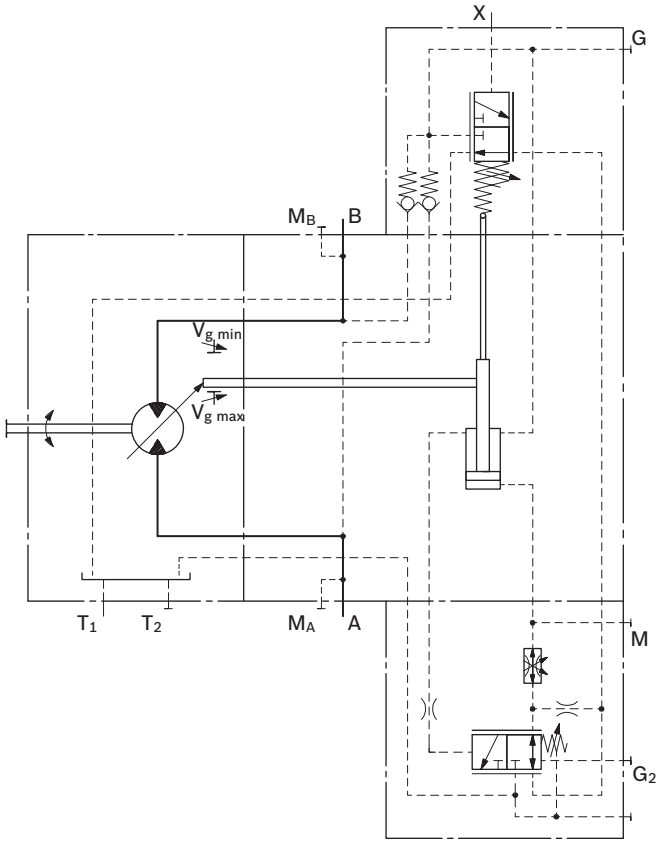

EP – Proportional control electric

The proportional electric control provides infinite setting of the displacement, proportional to the control current applied to the solenoid (sizes 28 to 200) or proportional valve (sizes 250).

For size 250, the pilot oil supply at port P requires an external pressure of p_{min} = 30 bar (p_{max} = 100 bar).

– Beginning of control at $V_{g\,max}$ (maximum torque, minimum speed at minimum control current)

– End of control at $V_{g\,min}$ (minimum torque, maximum permissible speed at maximum control current)

Characteristic

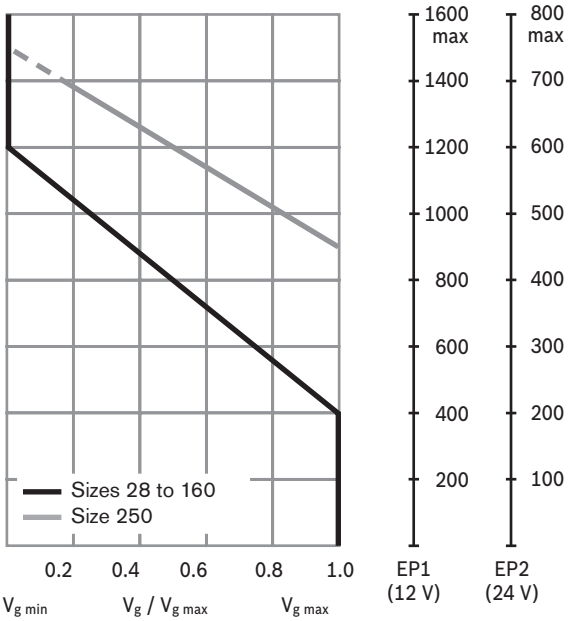

Note

The control oil is internally taken out of the high-pressure side of the motor (A or B). For reliable control, an operating pressure of at least 30 bar is required in A (B). If a control operation is performed at an operating pressure < 30 bar, an auxiliary pressure of at least 30 bar must be applied at port G via an external check valve. For lower pressures, please contact us.
Please note that pressures up to 450 bar can occur at port G.

The following only needs to be noted for size 250:

– The beginning of control and the EP characteristic are influenced by the case pressure. An increase in case pressure causes an increase in the beginning of control (see page 5) and thus a parallel shift of the characteristic.

Technical data, solenoid
Sizes 28 to 160

	EP1	EP2
Voltage	12 V (±20 %)	24 V (±20 %)
Control current		
Beginning of control	400 mA	200 mA
End of control	1200 mA	600 mA
Limiting current	1.54 A	0.77 A
Nominal resistance (at 20 °C)	5.5 Ω	22.7 Ω
Dither frequency	100 Hz	100 Hz
Duty cycle	100 %	100 %
Type of protection see connector design page 28		

The following electronic controllers and amplifiers are available for controlling the proportional solenoids:

– BODAS controller RC
Series 20 ____ RE 95200
Series 21 ____ RE 95201
Series 22 ____ RE 95202
Series 30 ____ RE 95203, RE 95204
and application software

– Analog amplifier RA ____ RE 95230

– Electric amplifier VT 2000, series 5X (see RE 29904) (for stationary application)

Technical data, proportional valve
Size 250

	EP1	EP2
Voltage	12 V (±20 %)	24 V (±20 %)
Beginning of control at $V_{g\,max}$	900 mA	450 mA
End of control at $V_{g\,min}$	1400 mA	700 mA
Limiting current	2.2 A	1.0 A
Nominal resistance (at 20 °C)	2.4 Ω	12 Ω
Duty cycle	100 %	100 %
Type of protection see connector design page 28		

See also proportional pressure-reducing valve DRE 4K (RE 29181).

Note

The spring return feature in the control part is not a safety device

The control part can stick in an undefined position by internal contamination (contaminated hydraulic fluid, abrasion or residual contamination from system components). As a result, the control will no longer respond correctly to the operator's commands.

Check whether the application on your machine requires additional safety measures, in order to bring the driven actuator into a controlled and safe position (immediate stop). If necessary, make sure these are properly implemented.

EP – Proportional control electric

Schematic EP1, EP2
Sizes 28 to 160

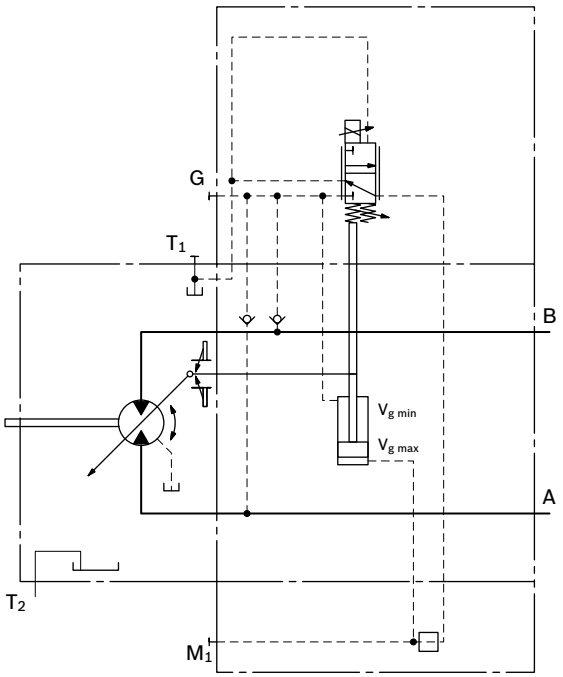

Schematic EP1, EP2
Size 250

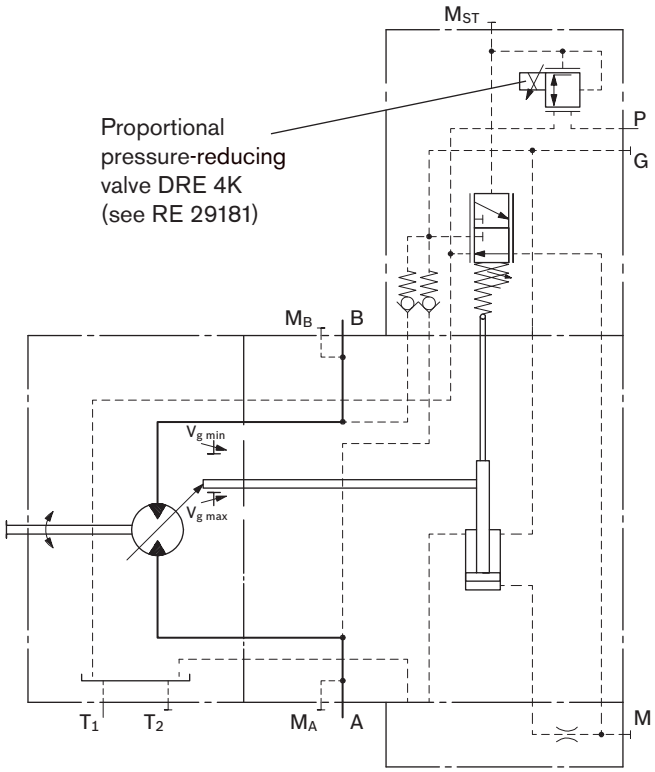

EP – Proportional control electric

EP.D
Pressure control, fixed setting

The pressure control overrides the EP control function. If the load torque or a reduction in motor swivel angle causes the system pressure to reach the setpoint of the pressure control, the motor will swivel towards a larger displacement.

The increase in the displacement and the resulting reduction in pressure cause the control deviation to decrease. With the increase in displacement the motor develops more torque, while the pressure remains constant.

Setting range of the pressure control valve
Sizes 28 to 160 _____ 80 to 400 bar
Size 250 _____ 80 to 350 to bar

Schematic EP.D
Sizes 28 to 160

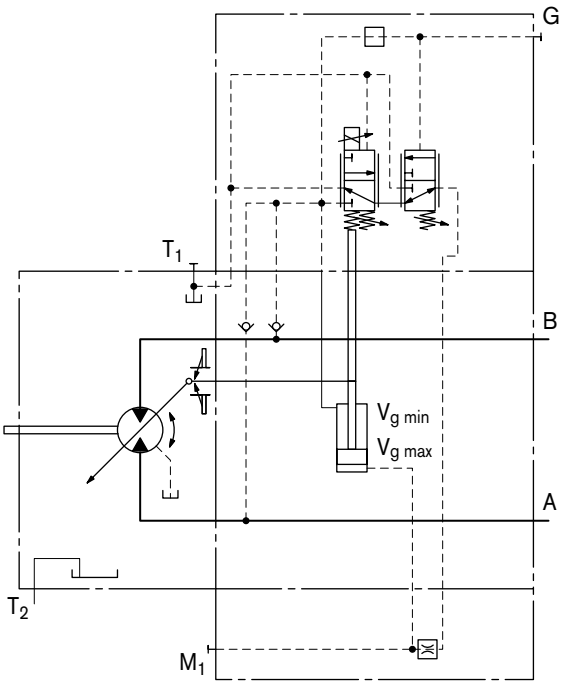

Schematic EP.D
Size 250

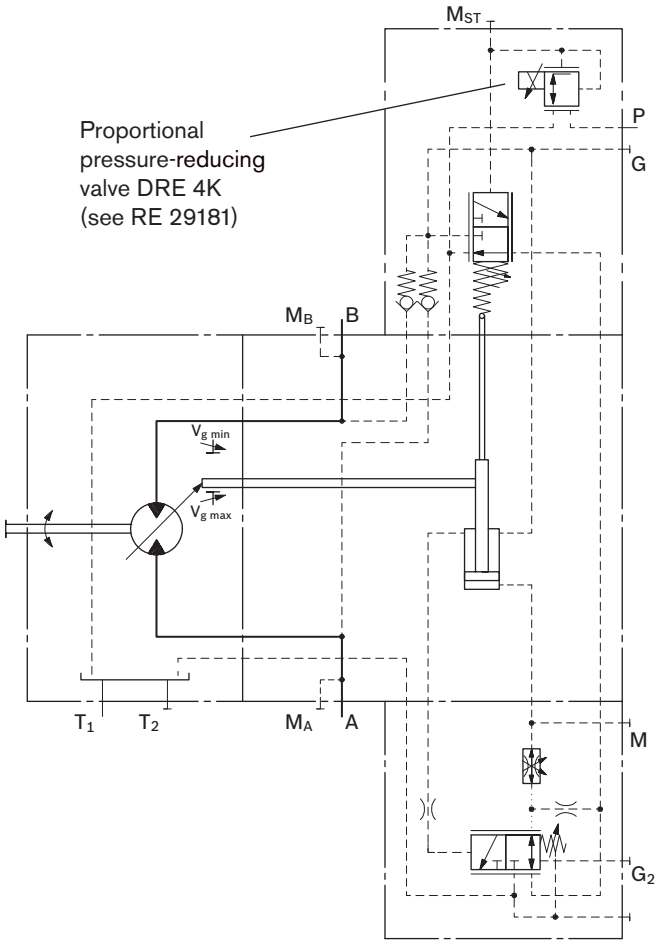

HZ – Two-point control hydraulic

The two-point hydraulic control allows the displacement to be set to either $V_{g\,min}$ or $V_{g\,max}$ by switching the pilot pressure at port X on or off.

– Position at $V_{g\,max}$ (without pilot pressure, maximum torque, minimum speed)

– Position at $V_{g\,min}$ (with pilot pressure > 10 bar activated, minimum torque, maximum permissible speed)

Characteristic HZ

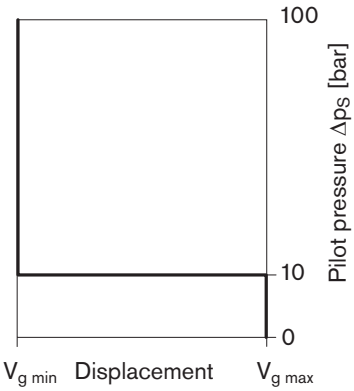

Note

– Maximum permissible pilot pressure: 100 bar

– The control oil is internally taken out of the high-pressure side of the motor (A or B). For reliable control, an operating pressure of at least 30 bar is required in A (B). If a control operation is performed at an operating pressure < 30 bar, an auxiliary pressure of at least 30 bar must be applied at port G via an external check valve. For lower pressures, please contact us.
Please note that pressures up to 450 bar can occur at port G.

– A leakage flow of maximum 0.3 L/min is present at port X (operating pressure > pilot pressure). To avoid a build-up of pilot pressure, pressure is to be relieved from port X to the reservoir.

Schematic HZ3
Sizes 55 to 107

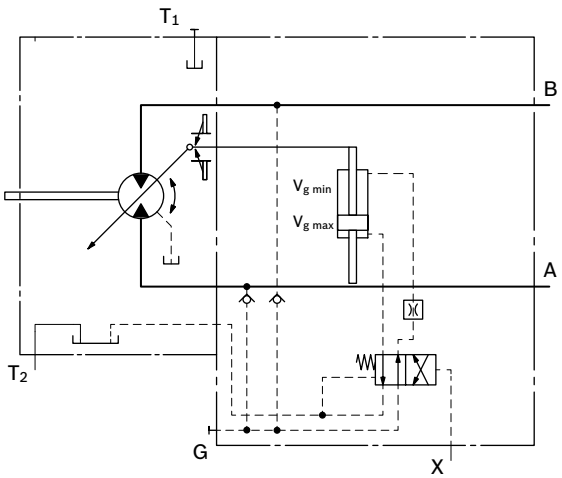

Size 160
With integrated counterbalance valve BVI, see page 37

Schematic HZ1
Sizes 28, 160

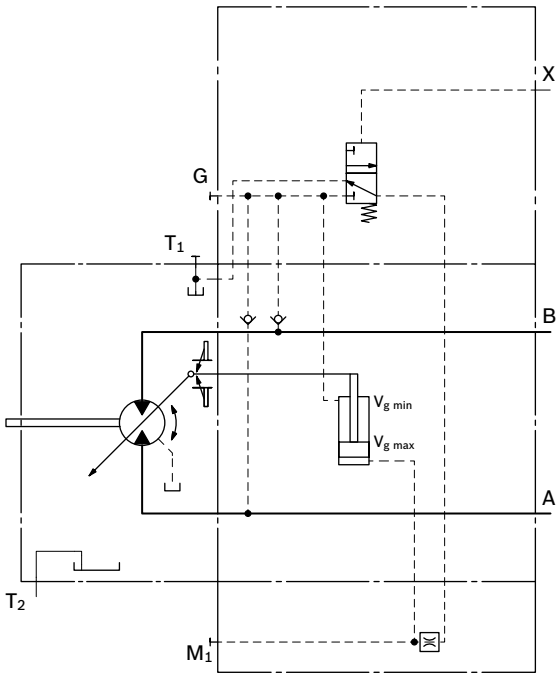

Schematic HZ
Size 250

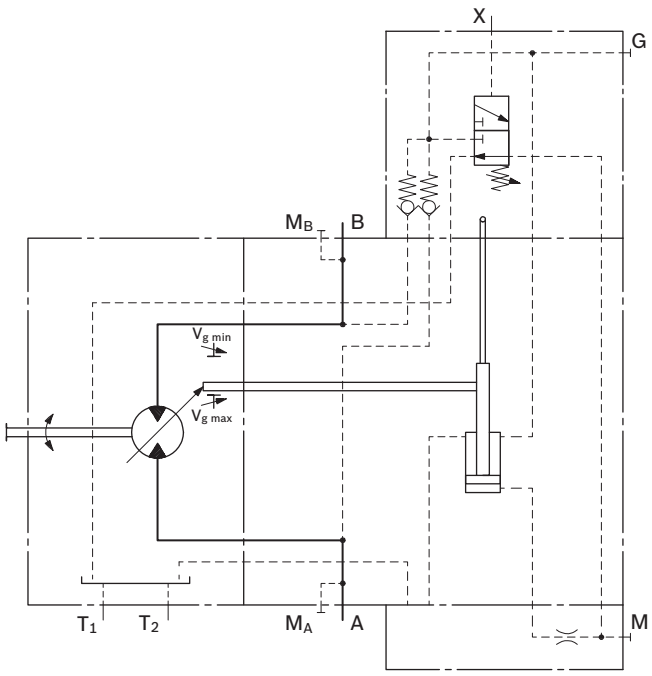

EZ – Two-point control electric

The two-point electric control with switching solenoid (sizes 28 to 160) or control valve (size 250) allows the displacement to be set to either $V_{g\,min}$ or $V_{g\,max}$ by switching the electric current at the switching solenoid or control valve on or off.

Note

The control oil is internally taken out of the high-pressure side of the motor (A or B). For reliable control, an operating pressure of at least 30 bar is required in A (B). If a control operation is performed at an operating pressure < 30 bar, an auxiliary pressure of at least 30 bar must be applied at port G via an external check valve. For lower pressures, please contact us.
Please note that pressures up to 450 bar can occur at port G.

Technical data, solenoid with Ø37
Sizes 28, 160

	EZ1	EZ2
Voltage	12 V (±20 %)	24 V (±20 %)
Displacement $V_{g\,max}$	de-energized	de-energized
Displacement $V_{g\,min}$	energized	energized
Nominal resistance (at 20 °C)	5.5 Ω	21.7 Ω
Nominal power	26.2 W	26.5 W
Minimum required current	1.32 A	0.67 A
Duty cycle	100 %	100 %
Type of protection see connector design page 28		

Technical data, solenoid with Ø45
Sizes 55 to 107

	EZ3	EZ4
Voltage	12 V (±20 %)	24 V (±20 %)
Displacement $V_{g\,max}$	de-energized	de-energized
Displacement $V_{g\,min}$	energized	energized
Nominal resistance (at 20 °C)	4.8 Ω	19.2 Ω
Nominal power	30 W	30W
Minimum required current	1.5 A	0.75 A
Duty cycle	100 %	100 %
Type of protection see connector design page 28		

Technical data, control valve
Size 250

	EZ1	EZ2
Voltage	12 V (±20 %)	24 V (±20 %)
Displacement $V_{g\,max}$	de-energized	de-energized
Displacement $V_{g\,min}$	energized	energized
Nominal resistance (at 20 °C)	6 Ω	23 Ω
Nominal power	26 W	26W
Minimum required current	2 A	1.04 A
Duty cycle	100 %	100 %
Type of protection see connector design page 28		

Schematic EZ1, EZ2
Sizes 28, 160

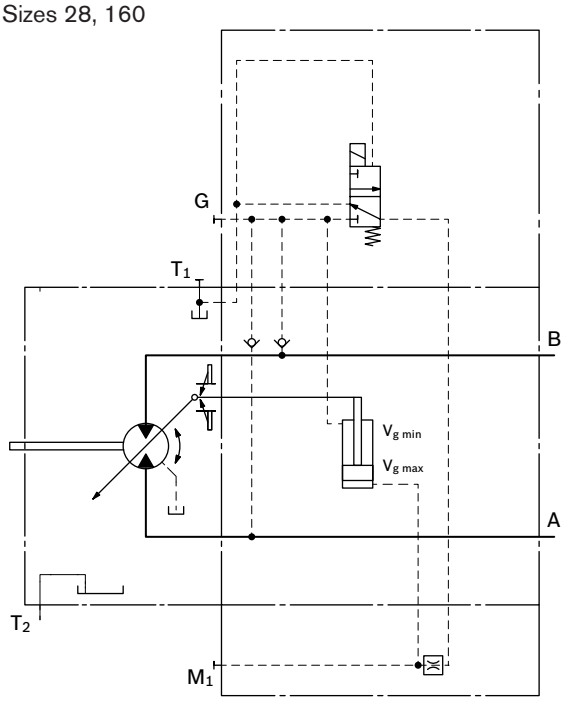

Schematic EZ3, EZ4
Sizes 55 to 107

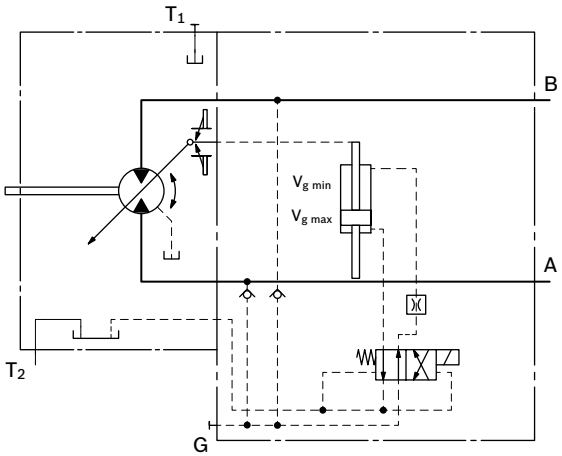

Schematic EZ1, EZ2
Size 250

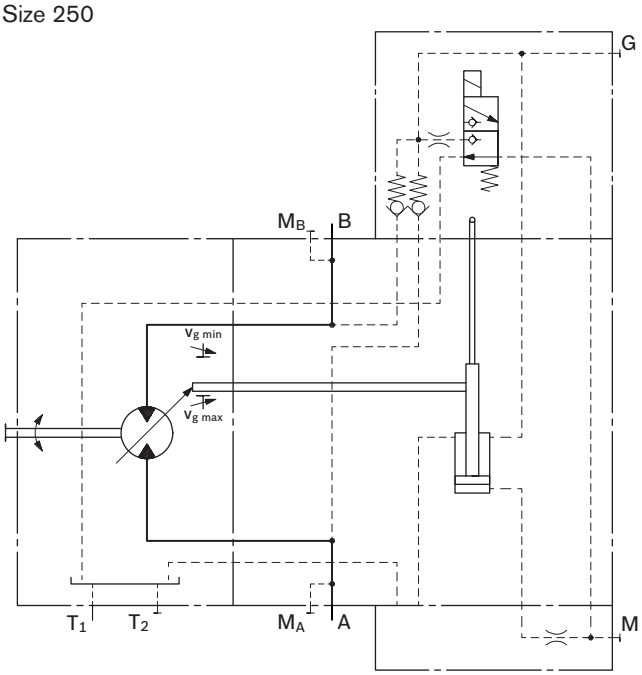

HA – Automatic control high-pressure related

The automatic high-pressure related control adjusts the displacement automatically depending on the operating pressure.

The displacement of the A6VE motor with HA control is $V_{g\,min}$ (maximum speed and minimum torque). The control unit measures internally the operating pressure at A or B (no control line required) and upon reaching the beginning of control, the controller swivels the motor from $V_{g\,min}$ to $V_{g\,max}$ with increase of pressure. The displacement is modulated between $V_{g\,min}$ and $V_{g\,max}$, thereby depending on load conditions.

– Beginning of control at $V_{g\,min}$ (minimum torque, maximum speed)

– End of control at $V_{g\,max}$ (maximum torque, minimum speed)

Note

– For safety reasons, winch drives are not permissible with beginning of control at $V_{g\,min}$ (standard for HA).

– The control oil is internally taken out of the high-pressure side of the motor (A or B). For reliable control, an operating pressure of at least 30 bar is required in A (B). If a control operation is performed at an operating pressure < 30 bar, an auxiliary pressure of at least 30 bar must be applied at port G via an external check valve. For lower pressures, please contact us.
Please note that pressures up to 450 bar can occur at port G.

– The beginning of control and the HA characteristic are influenced by the case pressure. An increase in case pressure causes an increase in the beginning of control (see page 5) and thus a parallel shift of the characteristic. Only for HA1T (sizes 28 to 160) and HA1, HA2, HA3, HA.T, (size 250).

– A leakage flow of maximum 0.3 L/min is present at port X (operating pressure > pilot pressure). To avoid a build-up of pilot pressure, pressure is to be relieved from port X to the reservoir. **Only for control HA.T**.

HA – Automatic control high-pressure related

HA1, HA3
With minimum pressure increase

An operating pressure increase of $\Delta p \leq$ approx. 10 bar results in an increase in displacement from 0 cm^3 to $V_{g\,max}$ (sizes 28 to 160) or from 0.2 $V_{g\,max}$ to $V_{g\,max}$ (size 250).

Beginning of control, setting range
Sizes 28 to 160 _____ 80 to 350 bar
Size 250 _____ 80 to 340 bar

Please state the desired beginning of control in plain text when ordering, e. g.: beginning of control at 300 bar.

Characteristic HA1, HA3

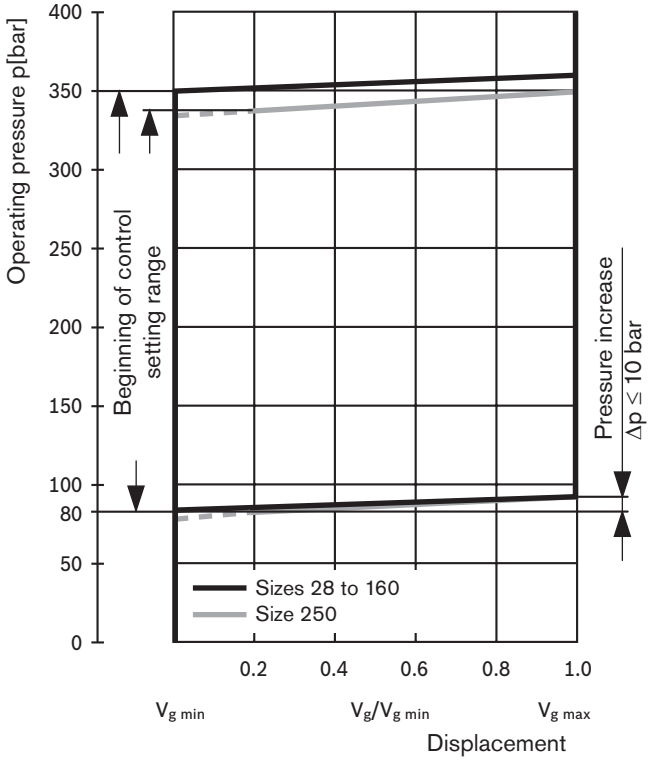

Schematic HA1
Sizes 28 to 160

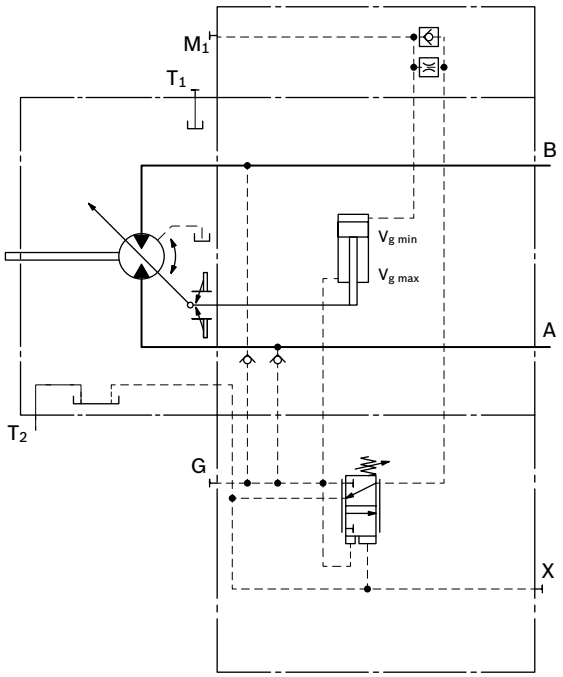

Size 250

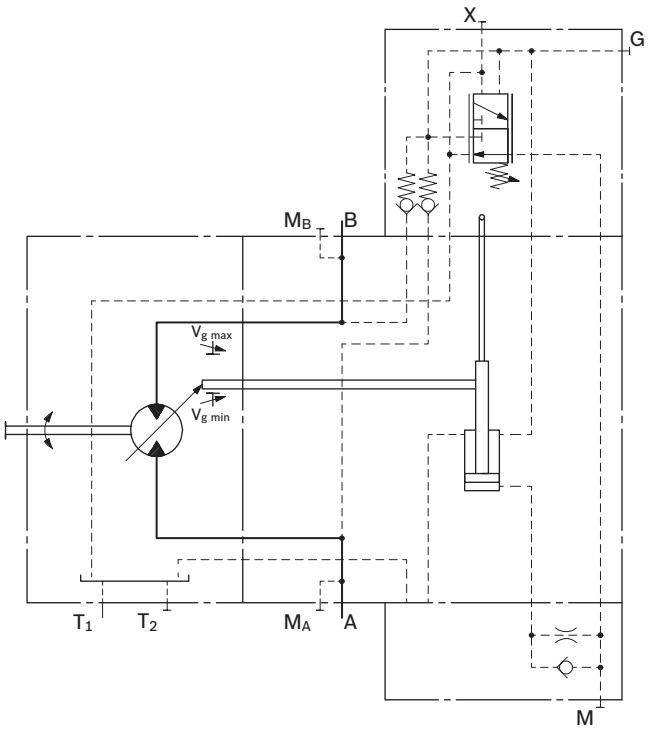

Schematic HA3
Sizes 55 to 160
With integrated counterbalance valve BVI, see page 37

HA – Automatic control high-pressure related

HA2
With pressure increase

An operating pressure increase of Δp = approx. 100 bar results in an increase in displacement from 0 cm^3 to $V_{g\,max}$ (sizes 28 to 160) or from 0.2 $V_{g\,max}$ to $V_{g\,max}$ (size 250).

Beginning of control, setting range
Sizes 28 to 160 _____ 80 to 350 bar
Size 250 _____ 80 to 250 bar

Please state the desired beginning of control in plain text when ordering, e. g.: beginning of control at 200 bar.

Characteristic HA2

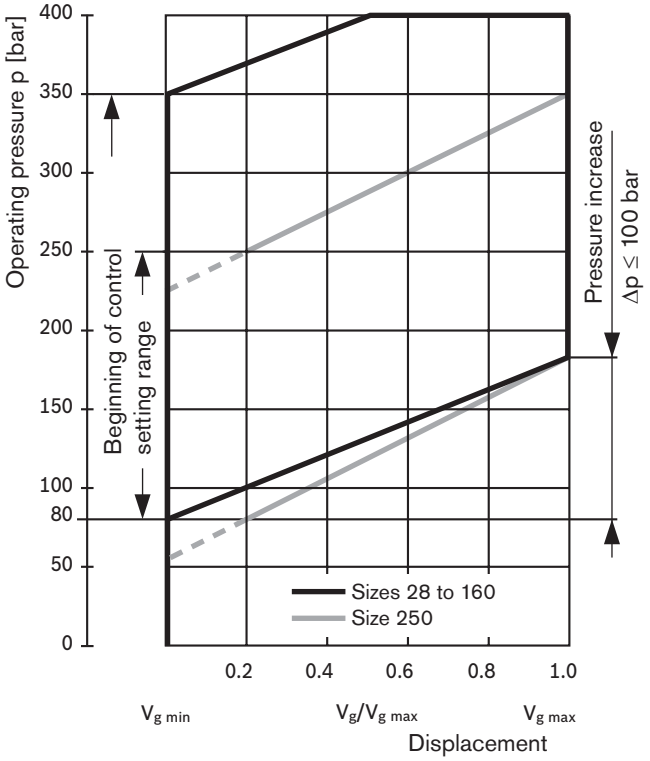

Schematic HA2
Sizes 28 to 160

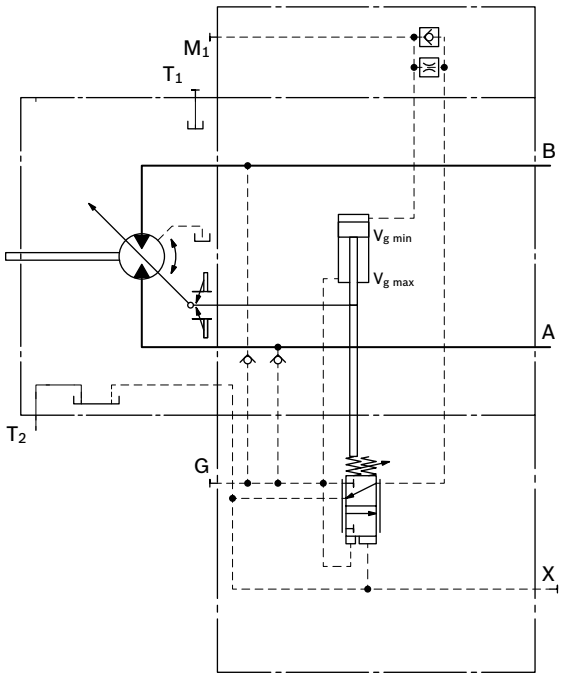

Size 250

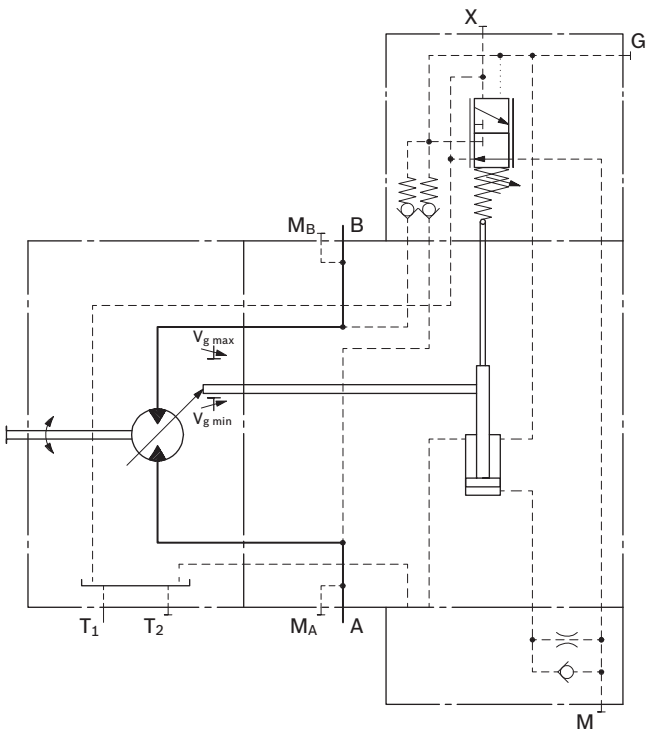

HA – Automatic control high-pressure related

HA.T
Override hydraulic remove control, proportional

With the HA.T control, the beginning of control can be influenced by applying a pilot pressure to port X.

For each 1 bar of pilot pressure increase, the beginning of control is reduced by 17 bar (sizes 28 to 160) or 8 bar (size 250).

Example (sizes 28 to 160):

Beginning of control setting	300 bar	300 bar
Pilot pressure at port X	0 bar	10 bar
Beginning of control at	300 bar	130 bar

Note
Maximum permissible pilot pressure 100 bar.

Schematic HA1.T
Sizes 28 to 160

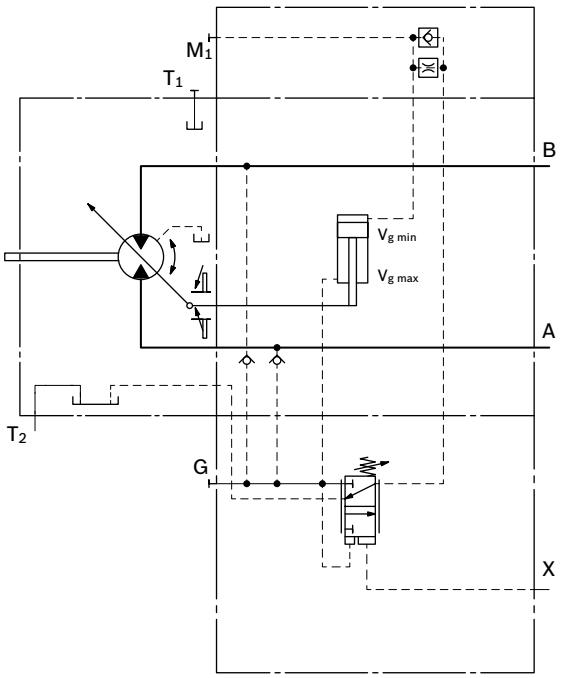

Schematic HA1.T
Size 250

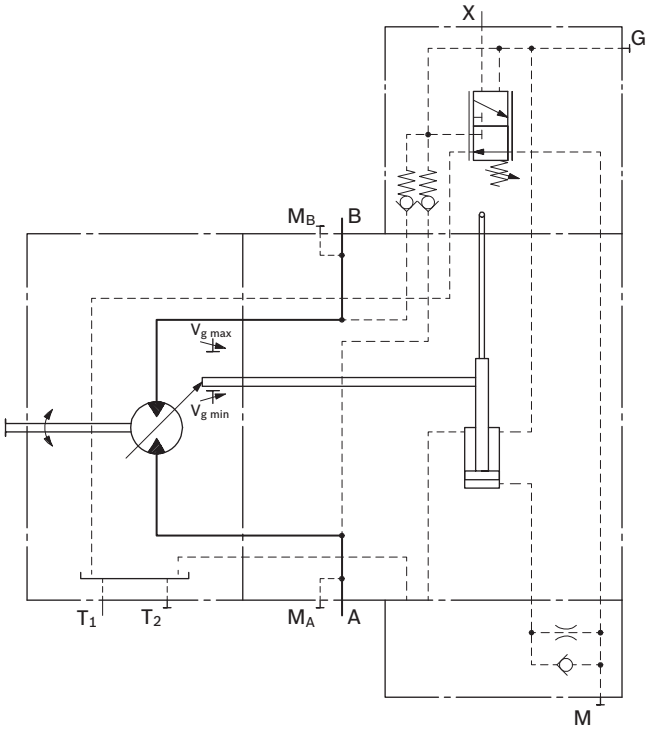

Schematic HA2.T
Sizes 28 to 160

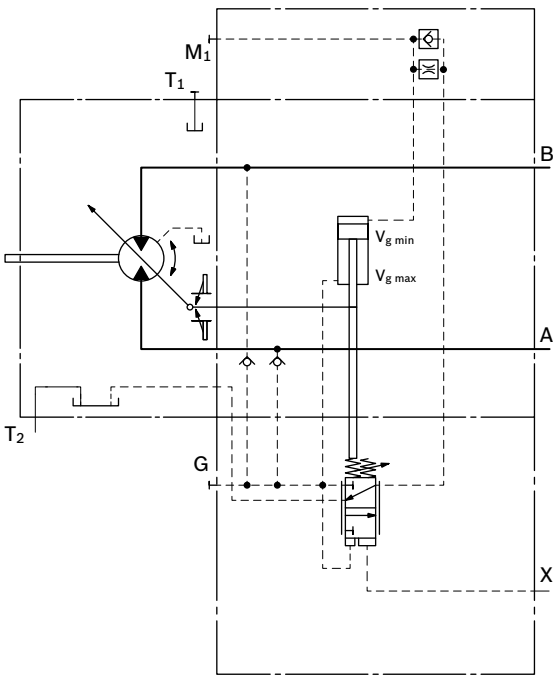

DA – Automatic control speed-related

The variable motor A6VE with automatic speed-related control, is intended for use in hydrostatic travel drives in combination with the variable pump A4VG with DA control.

A drive-speed-related pilot pressure signal is generated by the A4VG variable pump, and that signal, together with the operating pressure, regulates the swivel angle of the hydraulic motor.

Increasing pump speed, i.e. increasing pilot pressure, causes the motor to swivel to a smaller displacement (lower torque, higher speed), depending on the operating pressure.

If the operating pressure exceeds the pressure setpoint set on the controller, the variable motor swivels to a larger displacement (higher torque, lower speed).

Pressure ratio p_{St}/p_{HD}: 3/100, 5/100

DA closed loop control is only suitable for certain types of drive systems and requires review of the engine and vehicle parameters to ensure that the motor is used correctly and that machine operation is safe and efficient. We recommend that all DA applications be reviewed by a Bosch Rexroth application engineer.

Note

The beginning of control and the DA characteristic are influenced by case pressure. An increase in case pressure causes a decrease in the beginning of control (see page 5) and thus a parallel shift of the characteristic.

DA
Hydraulic travel direction valve

Dependent on the direction of rotation (travel direction), the travel direction valve is switched by using pilot pressures connections X_1 or X_2.

Direction of rotation	Operating pressure in	Pilot pressure in
cw	A	X_1
ccw	B	X_2

Schematic DA

Size 250

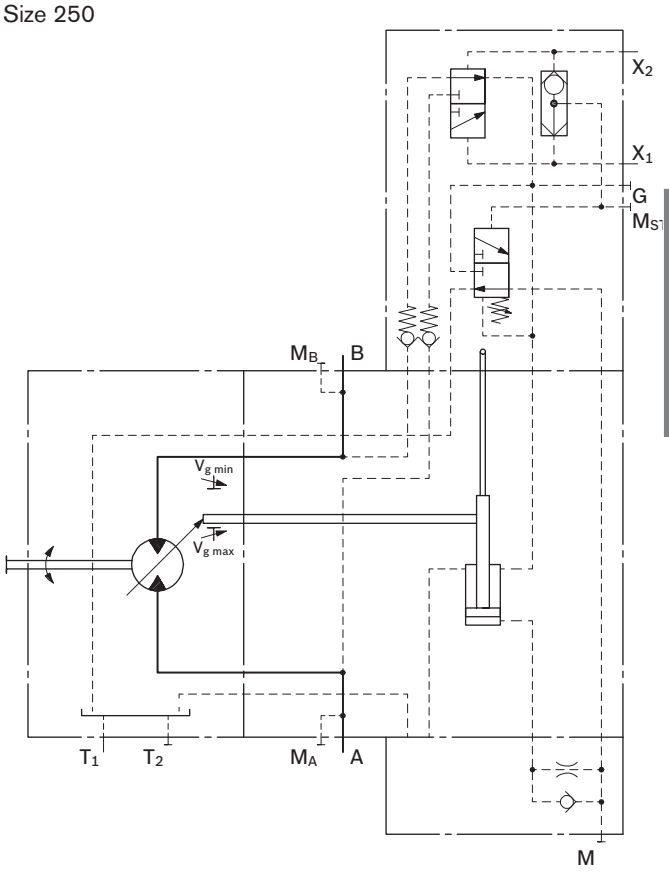

DA – Automatic control speed-related

DA3
Electric travel direction valve + electric $V_{g\ max}$-circuit

The travel direction valve is either spring offset or switched by energizing switching solenoid a, depending on the direction of rotation (travel direction).

When the switching solenoid b is energized, the DA control is overridden and the motor swivels to maximum displacement (high torque, lower speed) (electric $V_{g\ max}$-circuit).

Technical data, solenoid a with Ø37
(travel direction valve)

		DA3
Voltage		24 V (±20 %)
Direction of rotation	Operating pressure in	
ccw	B	de-energized
cw	A	energized
Nominal resistance (at 20 °C)		21.7 Ω
Nominal power		26.5 W
Minimum required current		0.67 A
Duty cycle		100 %
Type of protection see connector design page 28		

Technical data, solenoid b with Ø37
(electric override)

	DA3,
Voltage	24 V (±20 %)
No override	de-energized
Displacement $V_{g\ max}$	energized
Nominal resistance (at 20 °C)	21.7 Ω
Nominal power	26.5 W
Minimum required current	0.67 A
Duty cycle	100 %
Type of protection see connector design page 28	

Schematic DA3
Sizes 28 to 160

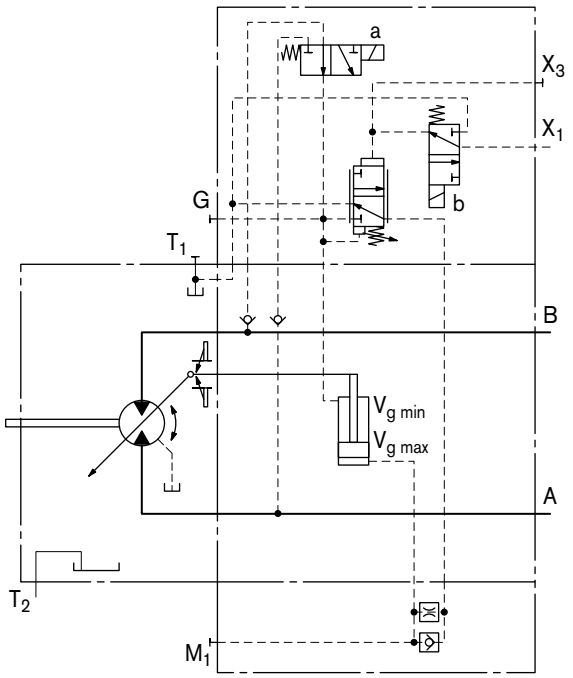

Electric travel direction valve (for DA)

Application in travel drives in closed circuits. The travel direction valve of the motor is actuated by an electric signal that also switches the swivel direction of the travel drive pump (e. g. A4VG with DA control valve).

If the pump in the closed circuit is switched to the neutral position or into reverse, the vehicle may experience jerky deceleration or braking, depending on the vehicle's mass and current travel speed.

When the travel direction valve of the pump (e. g. 4/3-directional valve of the DA-control) is switched to

– the neutral position,
  the electric circuitry causes the previous signal on the travel direction valve on the motor to be retained.

– reversing,
  the electric circuitry causes the travel direction valve on the motor to switch to the other travel direction following a time delay (approx. 0.8 s) with respect to the pump.

As a result, jerky deceleration or braking is prevented in both cases.

Schematic - electric travel direction valve

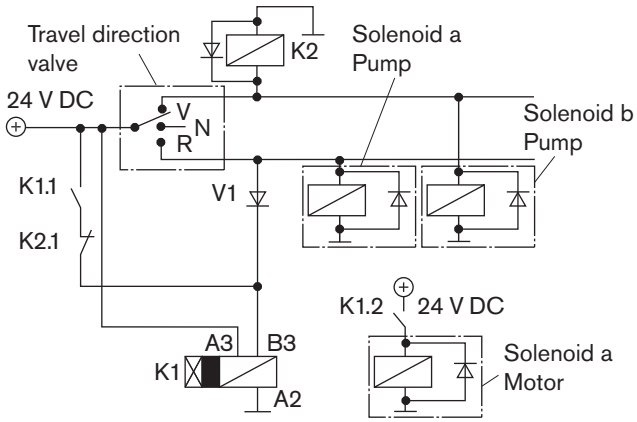

Note
The shown diodes and relays are not included in the delivery of the motor.

DA3 control **(see page 22)**

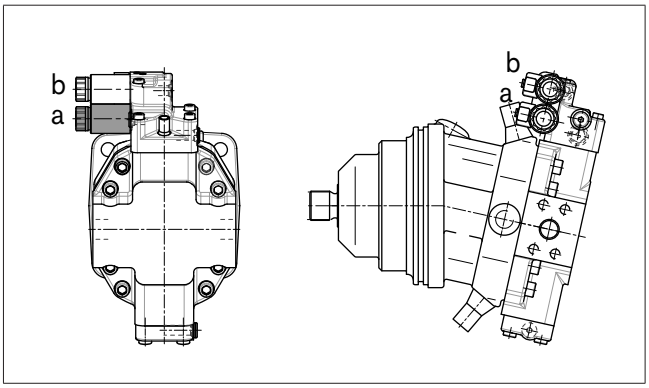

Dimensions

Before finalizing your design, request a binding installation drawing. Dimensions in mm.

HD1, HD2 – Proportional control hydraulic

Port plate 02 – SAE flange port A and B at side, opposite

For dimensions of control devices, see data sheet for variable motor A6VM (RE 91604)

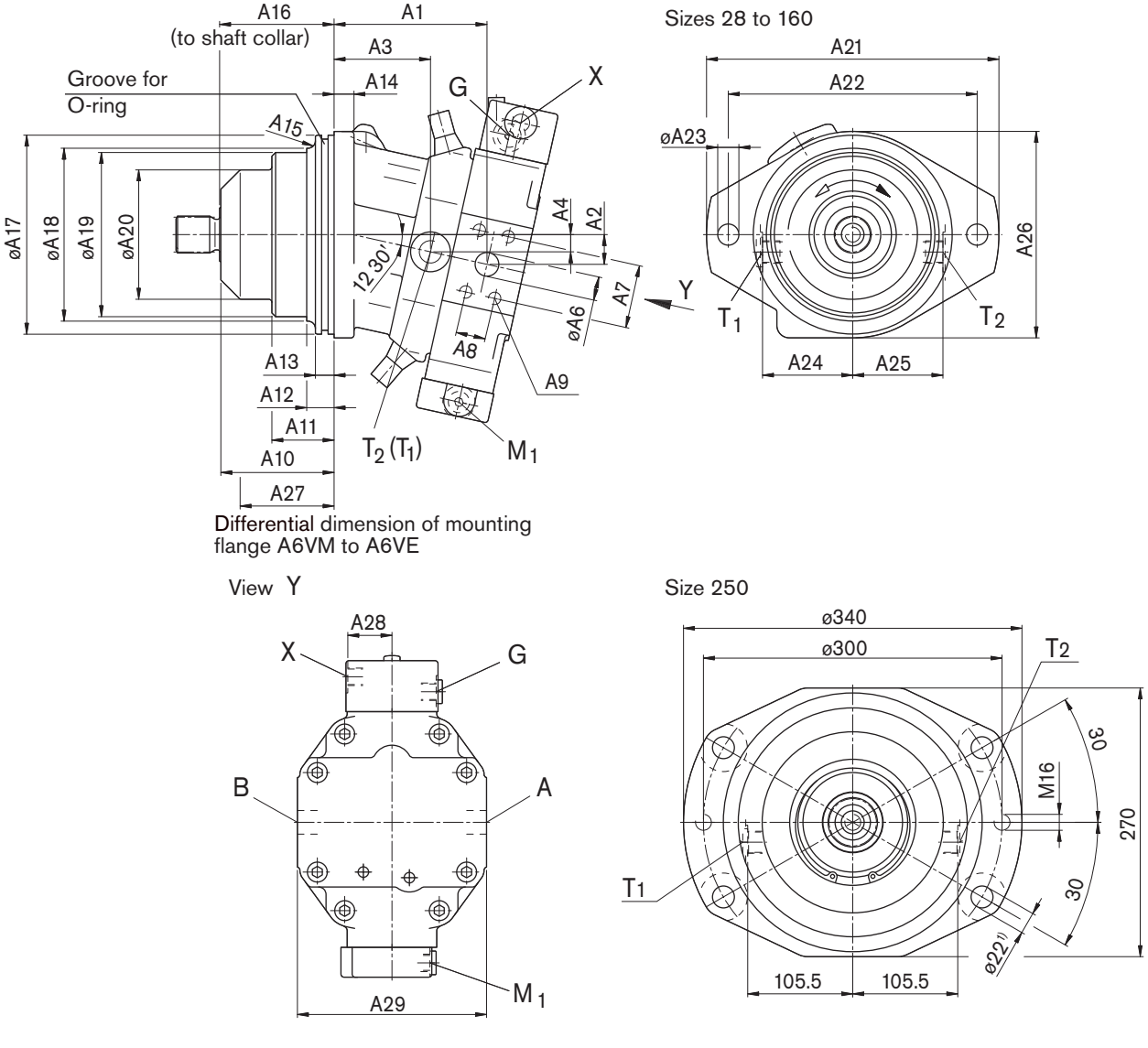

Ports

Size	Service line port A, B SAE J518	Drain port T_1; T_2 [2] DIN 3852 [3]
28	3/4 in	M18 x 1.5; 12 deep
55	3/4 in	M18 x 1.5; 12 deep
80	1 in	M18 x 1.5; 12 deep
107	1 in	M18 x 1.5; 12 deep
160	1 1/4 in	M26 x 1.5; 16 deep
250	1 1/4 in	M22 x 1.5; 14 deep

1) Hole ø22 with spot face ø48; 2 deep

2) 1x plugged

3) Observe the general instructions on page 40 for the maximum tightening torques.

For further ports, see variable motor A6VM (RE 91604)!

Dimensions

Before finalizing your design, request a binding installation drawing. Dimensions in mm.

Standard flange L (sizes 28 to 160), **M** (size 250)

NG	A1	A2	A3	A4	øA6	A7	A8	A9 (DIN 13)[2]	A10	A11	A12	A13	A14	A15
28	91	20	47	10	ø19	50.8	23.8	M10 x 1.5; 17 deep	88	54	–	15	14	R10
55	123	24	77	14	ø19	50.8	23.8	M10 x 1.5; 17 deep	91	50	22	15	16	R6
80	129	28	78	16	ø25	57.2	27.8	M12 x 1.75; 17 deep	109.5	65	30	15	18	R10
107	137	30	84	18	ø25	57.2	27.8	M12 x 1.75; 17 deep	121.8	72	35	15	18	R12
160	171	34	109	20	ø32	66.7	31.8	M14 x 2; 19 deep	122	67	29	15	20	R5
250	204	44	103	20	ø32	66.7	31.8	M14 x 2; 19 deep	131.5	–	–	14	25[1]	–

NG	A16[3]	A17	A18	A19	A20	A21	A22	øA23	A24	A25	A26	A27	A28	A29	O-ring[4]
28	89	$135_{-0.025}$	110	–	86	188	160	ø13.5	62.5	62.5	142	64	35.5	132	126x4
55	92	$160_{-0.025}$	139	132	104	235	200	ø17	72.5	72.5	166	59	35.5	152	150x4
80	110.5	$190_{-0.029}$	151	143	116	260	224	ø21	78.5	78.5	198	79	35.5	164	182x4
107	122.8	$200_{-0.029}$	168	160	132	286	250	ø21	86.5	86.5	210	82	40.5	180	192x4
160	123	$200_{-0.029}$	188	180	146	286	250	ø21	98.5	98.5	210	83	40.5	204	192x4
250	133.5	$260_{-0.081}$	230	–	–	–	–	–	–	–	–	83.5	48.5	224	250x5

Adapter flange U (size 107)

NG	A1	A2	A3	A4	A5	A6	A7	A8	A9 (DIN 13)[2]	A10	A11	A12	A13	A14
107	150	30	96	18	15.5	25	57.2	27.8	M12 x 1.75; 17 deep	109.5	59.7	22.7	18	15

NG	A15	A16	A17	A18	A19	A20	A21	A22	A23	A24	A25	A26	A27	A28	A29	O-ring[4]
107	R8	110.5	$190_{-0.025}$	168	160	132	260	224	22	86.5	86.5	198	91.5	13.8	70	182x4

Drive shafts

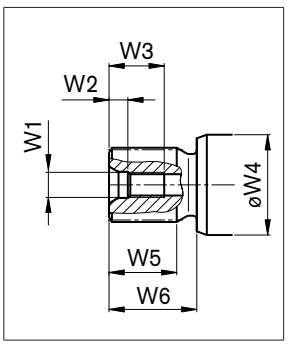

NG	Splined shaft DIN 5480	W1[2)5]	W2	W3	øW4	W5	W6
28	**A** (W30x2x14x9g)	M10 x 1.5	7.5	22	ø35	27	35
55	**Z** (W30x2x14x9g)	M12 x 1.75	9.5	28	ø45	27	35
80	**A** (W40x2x18x9g)	M16 x 2	12	36	ø50	37	45
107	**Z** (W40x2x18x9g)	M12 x 1.75	9.5	28	ø60	37	45
160	**A** (W50x2x24x9g)	M16 x 2	12	36	ø70	44	55
250	**Z** (W50x2x24x9g)	M16 x 2	12	36	ø60	49	58

1) Hole ø22 with spot face ø48; 2 deep
2) Observe the general instructions on page 40 for the maximum tightening torques.
3) To shaft collar
4) The O-ring is not included in the delivery contents
5) Center bore according to DIN 332 (thread according to DIN 13)

Dimensions

Before finalizing your design, request a binding installation drawing. Dimensions in mm.

HA3 – Automatic control high-pressure related

Port plate 22 – SAE flange port A and B at bottom, with integrated counterbalance valve

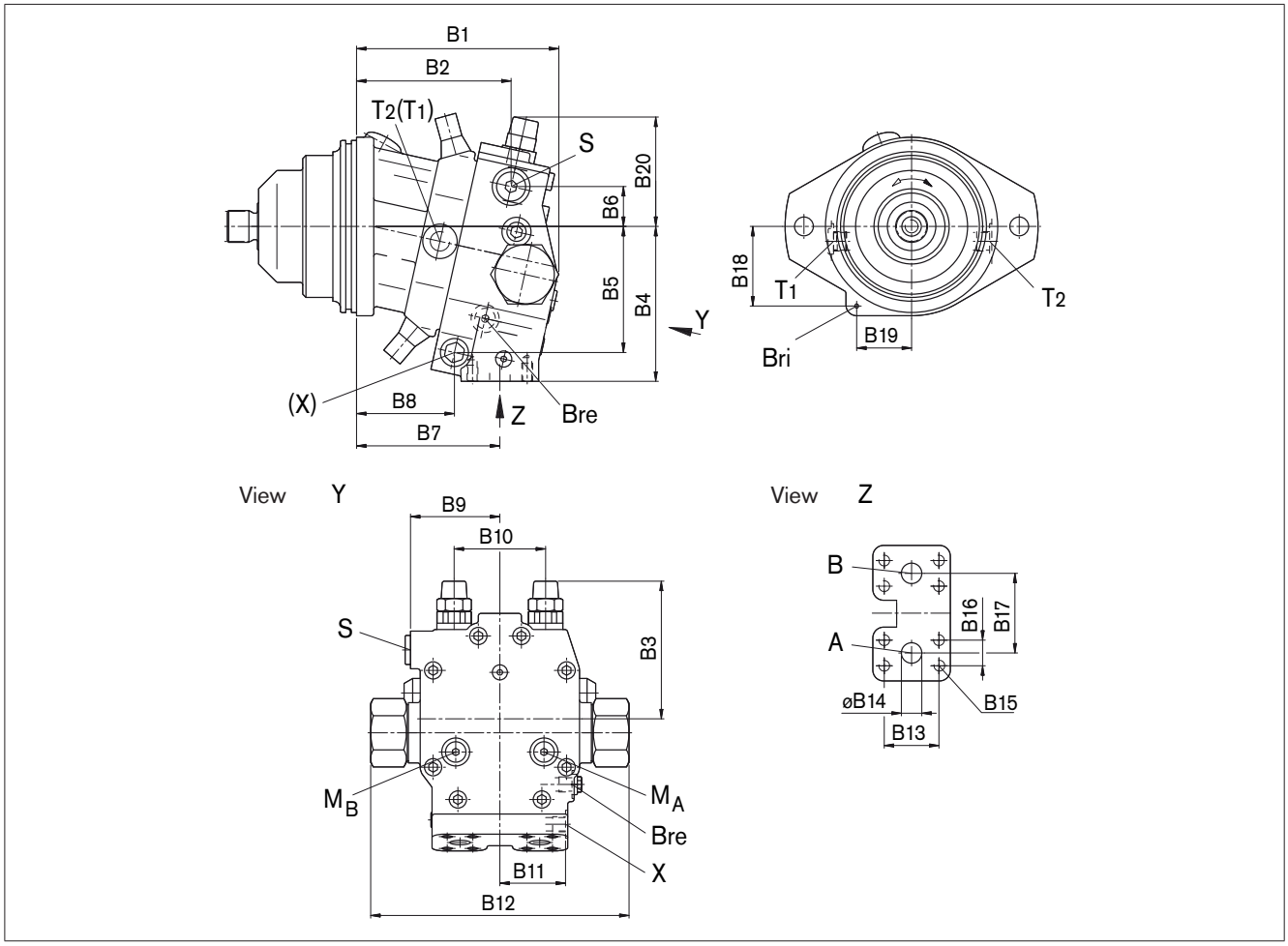

Ports

NG	B1	B2	B3	B4	B5	B6	B7	B8	B9	B10	B11	B12	B13	B14	B15 (DIN 13)[2]	B16	B17
55	192	144	127	144	117	37	133	91	83	85	64	259	50.8	19	M10 x 1.5; 17 deep	23.8	80
80	198	150	136	162	132	40	138	93	83	90	69	259	57.2	25	M12 x 1.75; 17 deep	27.8	86
107	202	161	139	171.5	143	40	144	99	85	96	72	259	57.2	25	M12 x 1.75; 17 deep	27.8	86
160	240	195	152	197	162	47	177	128	102	108	78	259	66.7	32	M14 x 2; 19 deep	31.8	94

NG	B18	B19	B20	Service line port A, B SAE J518	Drain port T_1; T_2[1] DIN 3852[2]	Infeed S DIN 3852[2]
55	74	51	102	3/4 in	M18 x 1.5; 12 deep	M22 x 1.5; 14 deep
80	90	53	114	1 in	M18 x 1.5; 12 deep	M22 x 1.5; 14 deep
107	96	58	122	1 in	M18 x 1.5; 12 deep	M22 x 1.5; 14 deep
160	94	65	136	1 1/4 in	M26 x 1.5; 16 deep	M27 x 2; 16 deep

1) 1x plugged

2) Observe the general instructions on page 40 for the maximum tightening torques.

Note:
Port plate HZ3 and HA3 are not identical!

Dimensions

Before finalizing your design, request a binding installation drawing. Dimensions in mm.

Ports

Designation	Port for	Standard[5]	Size[1]	Maximum pressure [bar][2]	State[8]
X	Pilot signal (open with HZ and HA3T, plugged with HA3)	ISO 6149	M14 x 1.5; 11.5 deep	100	O
M_A, M_B	Measuring stroking chamber	DIN 3852	M14 x 1.5; 11.5 deep	420	X
Bre	Brake release, external	DIN 3852	M14 x 1.5; 11.5 deep	30	O/X[6]
Bri	Brake release, internal (not provided on versions with flange U)	–	ø4	30	X/O[7]

1) Observe the general instructions on page 40 for the maximum tightening torques.
2) Momentary pressure spikes may occur depending on the application. Keep this in mind when selecting measuring devices and fittings.
3) Only dimensions according to SAE J518, metric fastening thread is a deviation from standard.
4) Depending on installation position, T_1 or T_2 must be connected (see also installation instructions on page 39).
5) The spot face can be deeper than specified in the appropriate standard.
6) Must be connected for external piping. Is plugged with internal ducting.
7) Is plugged with external ducting. Must be connected with internal piping.
8) O = Must be connected (plugged on delivery)
X = Plugged (in normal operation)

Connector for solenoids

Before finalizing your design, request a binding installation drawing. Dimensions in mm.

DEUTSCH DT04-2P-EP04

Sizes 28 to 160

Molded, 2-pin, without bidirectional suppressor diode

There is the following type of protection with mounted mating connector:

IP67 _____ DIN/EN 60529

and IP69K _____ DIN 40050-9

Circuit symbol

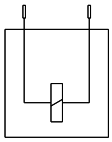

Mating connector

DEUTSCH DT06-2S-EP04
Bosch Rexroth Mat. No. R902601804

Consisting of:	DT designation
– 1 housing	DT06-2S-EP04
– 1 wedge	W2S
– 2 sockets	0462-201-16141

The mating connector is not included in the delivery contents. This can be supplied by Bosch Rexroth on request.

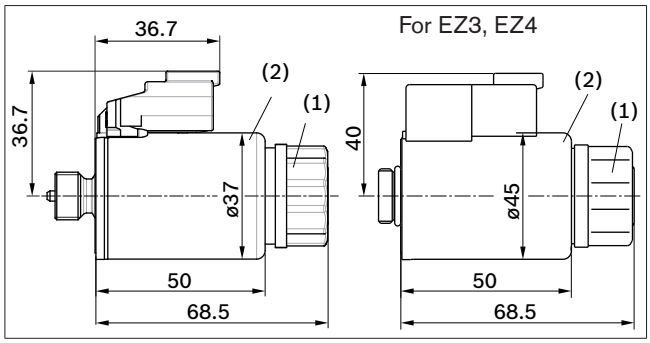

HIRSCHMANN DIN EN 175 301-803-A/ISO 4400

Size 250

Without bidirectional suppressor diode

There is the following type of protection with mounted mating connector:

IP65 _____ DIN/EN 60529

The seal ring in the cable fitting is suitable for line diameters of 4.5 mm to 10 mm.

The HIRSCHMANN connector is included in the delivery contents of the motor.

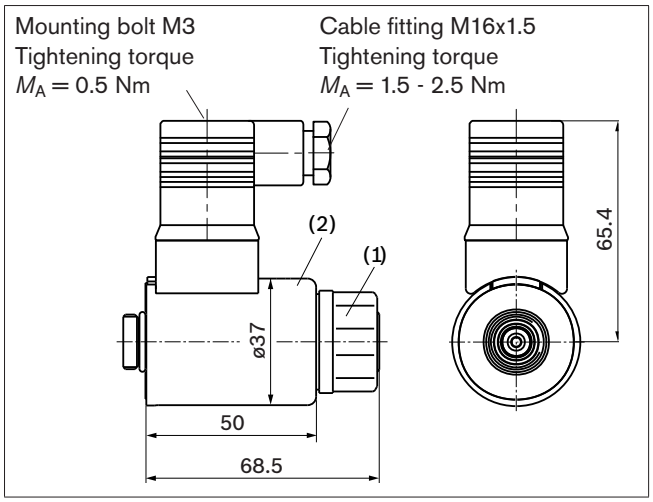

Changing connector orientation

If necessary, you can change the connector orientation by turning the solenoid housing.

To do this, proceed as follows:

1. Loosen the mounting nut (1) of the solenoid. To do this, turn the mounting nut (1) one turn counter-clockwise.
2. Turn the solenoid body (2) to the desired orientation.
3. Retighten the mounting nut. Tightening torque: 5+1 Nm. (WAF26, 12-sided DIN 3124)

On delivery, the connector orientation may differ from that shown in the brochure or drawing.

Flushing and boost pressure valve

The flushing and boost pressure valve is used to remove heat from the hydraulic circuit.

In an open circuit, it is used only for flushing the housing.

In a closed circuit, it ensures a minimum boost pressure level in addition to the case flushing.

Hydraulic fluid is directed from the respective low pressure side into the motor housing. This is then fed into the reservoir, together with the case drain fluid. The hydraulic fluid, removed out of the closed circuit must be replaced by cooled hydraulic fluid from the boost pump.

The valve is mounted onto the port plate or integrated (depending on the control type and size).

Cracking pressure of pressure retaining valve
(observe when setting the primary valve)
fixed setting _____ 16 bar

Switching pressure of flushing piston Δp _____ 8±1 bar

Flushing flow q_v

Orifices can be used to set the flushing flows as required.
Following parameters are based on:
$\Delta p_{ND} = p_{ND} - p_G = 25$ bar and $\nu = 10$ mm²/s
(p_{ND} = low pressure, p_G = case pressure)

Size	Flushing flow q_V [L/min]	Mat. No. of orifice
28, 55	3.5	R909651766
80	5	R909419695
107	8	R909419696
160	10	R909419697
250	10	R909419697

With sizes 28 to 160, orifices can be supplied for flushing flows from 3.5 to - 10 L/min. For other flushing flows, please state the required flushing flow when ordering. The flushing flow without orifice is approx. 12 to 14 L at low pressure $\Delta p_{ND} = 25$ bar.

Schematic EP
Sizes 28 to 160

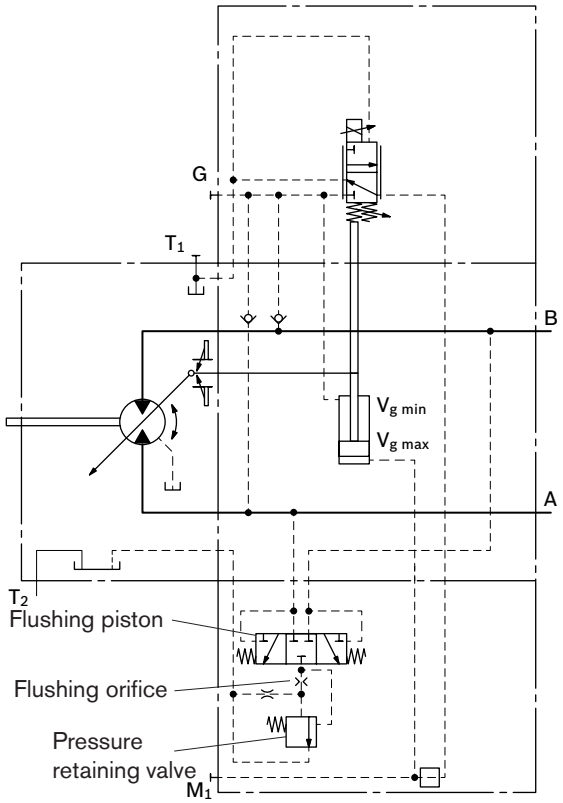

Schematic
Size 250

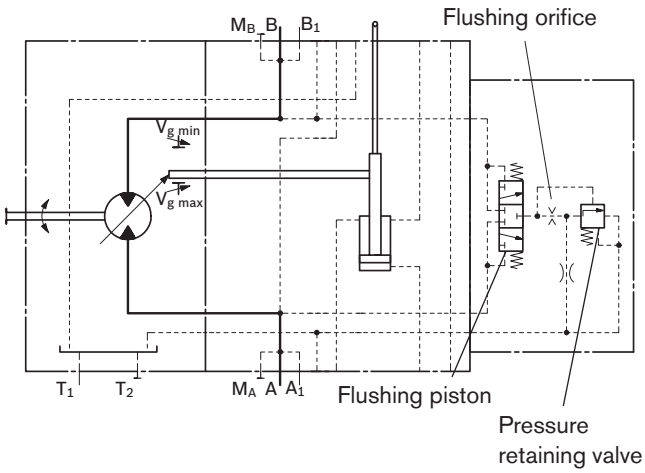

Flushing and boost pressure valve

Before finalizing your design, request a binding installation drawing. Dimensions in mm.

Dimensions

Sizes 28 to 160

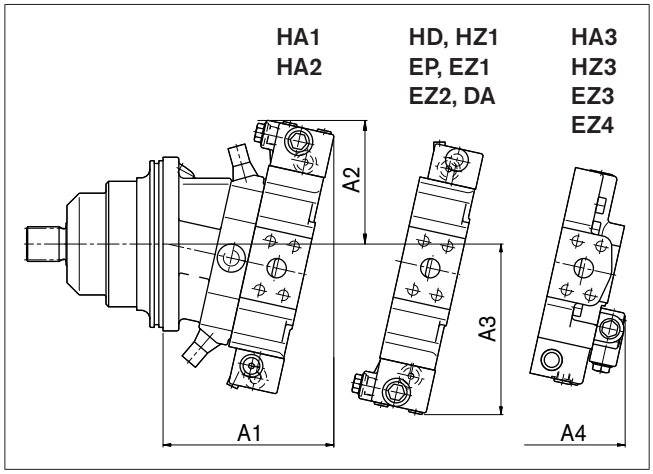

NG	A1	A2	A3	A4
28	152	125	161	–
55	182	133	176	176
80	194	141	192	176
107 (L flange)	204	143	202	186
107 (U flange)	217	143	202	199
160	245	154	220	–

Size 250

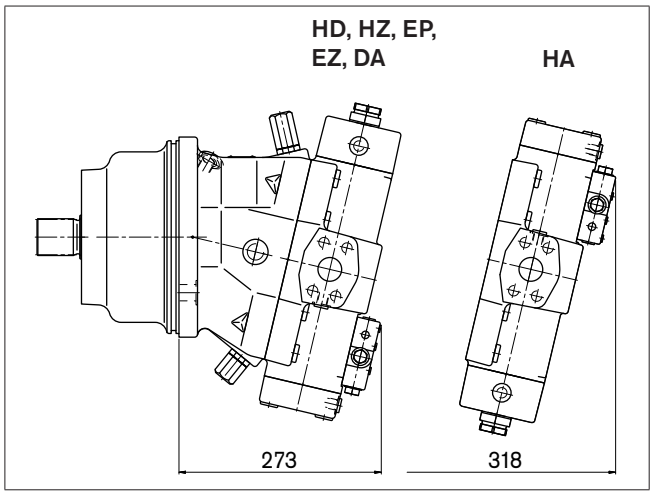

Counterbalance valve BVD and BVE

Before finalizing your design, request a binding installation drawing. Dimensions in mm.

Function

Travel drive/winch counterbalance valves are designed to reduce the danger of overspeeding and cavitation of axial piston motors in open circuits. Cavitation occurs if the motor speed is greater than it should be for the given input flow while braking, travelling downhill, or lowering a load.

If the inlet pressure drops, the counterbalance spool throttles the return flow and brakes the motor until the inlet pressure returns to approx. 20 bar.

Note

– BVD available for sizes 55 to 160 and BVE available for sizes 107 and 160.

– The counterbalance valve must be ordered additionally. We recommend ordering the counterbalance valve and the motor as a set. Ordering example: A6VE80HA1T/63W–VAL38800A + BVD20F27S/41B–V03K16D0400S12

– For safety reasons, controls with beginning of control at $V_{g\ min}$ (e. g. HA) are not permissible for winch drives!

– The counterbalance valve does not replace the mechanical service brake and park brake.

– Observe the detailed notes on the BVD counterbalance valve in RE 95522 and BVE counterbalance valve in RE 95525

– For the design of the brake release valve, we must know for the mechanical park brake:

- the pressure at the start of opening
- the volume of the counterbalance spool between minimum stroke (brake closed) and maximum stroke (brake released with 21 bar)
- the required closing time for a warm device (oil viscosity approx. 15 mm^2/s)

Travel drive counterbalance valve BVD...F

Application option

– Travel drive on wheeled excavators

Example schematic for travel drive for wheeled excavators
A6VE80HA1T/63W–VAL38800A + BVD20F27S/41B–V03K16D0400S12

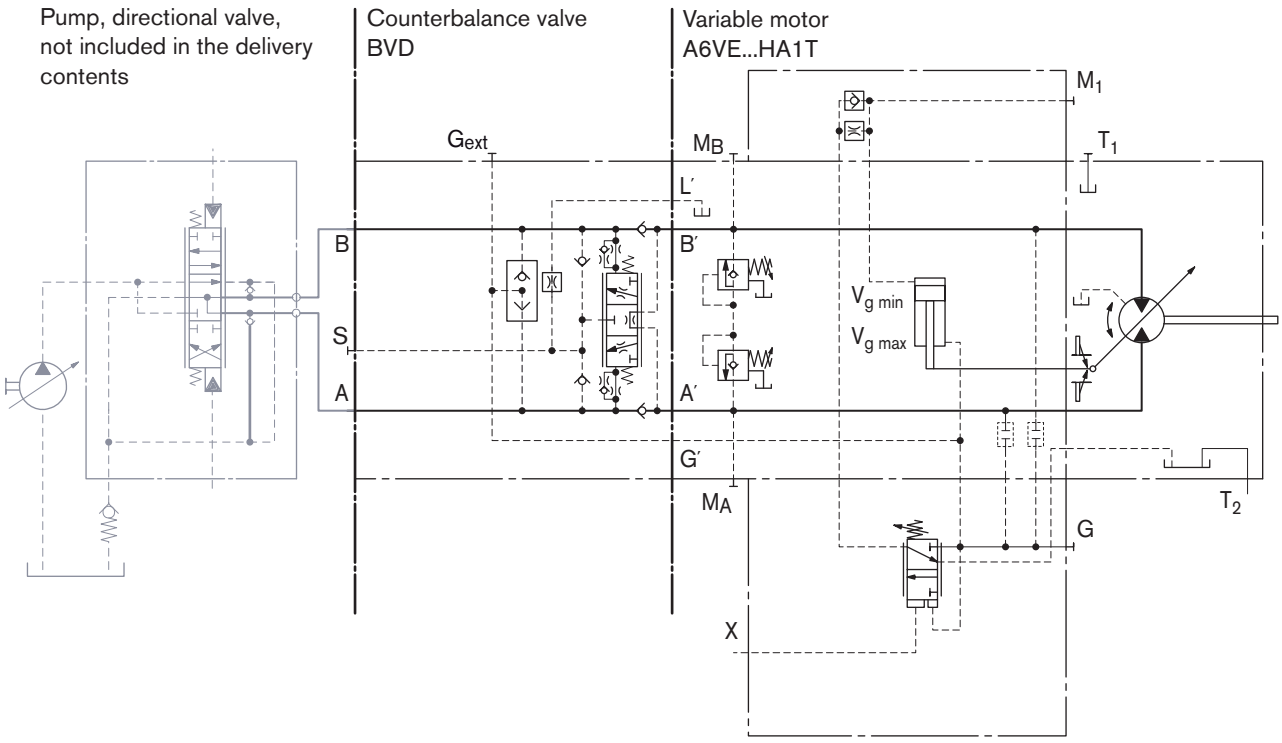

Counterbalance valve BVD and BVE

Before finalizing your design, request a binding installation drawing. Dimensions in mm.

Winch counterbalance valve BVD...W and BVE

Application options

– Winch drive in cranes (BVD and BVE)

– Track drive in excavator crawlers (BVD)

Example schematic for winch drive in cranes
A6VE80HD1D/63W–VAL38800B + BVE25W38S/51ND-V100K00D4599T30S00-0

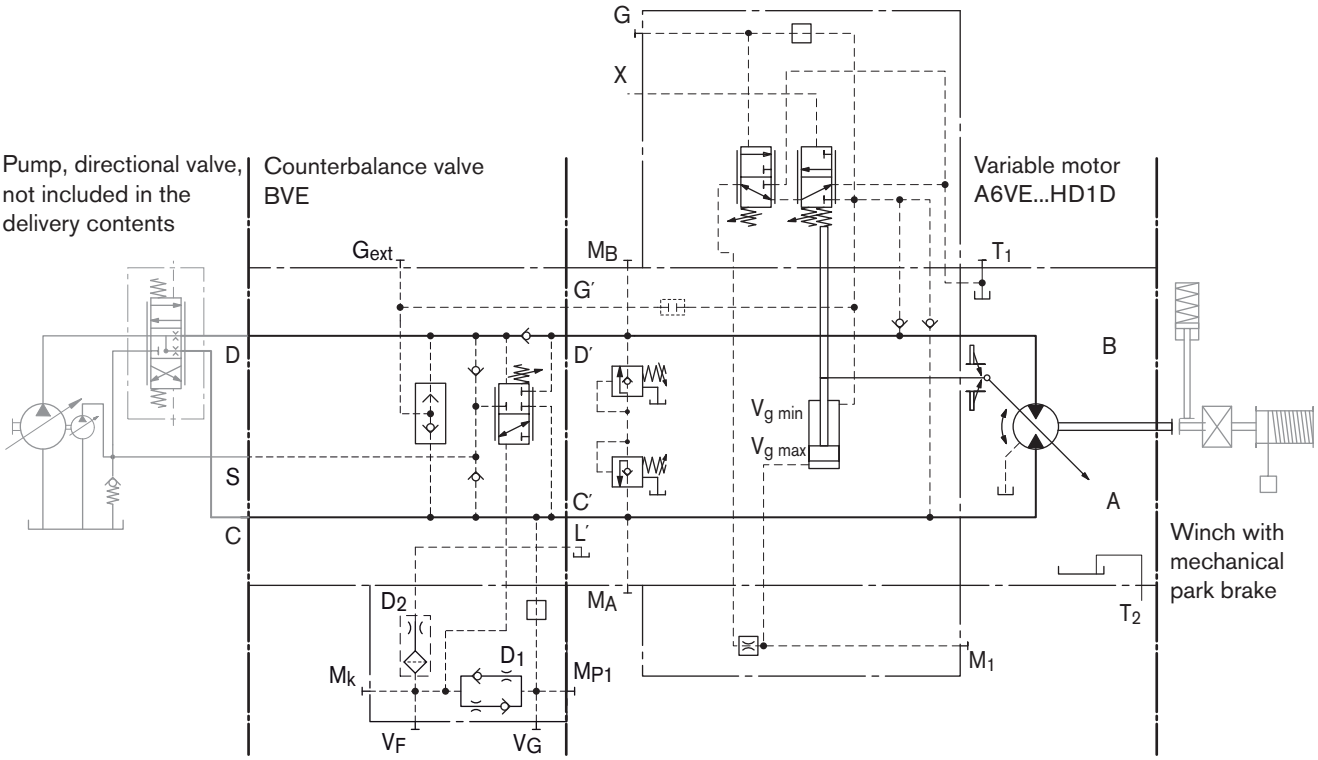

Permissible input flow or pressure in operation with DBV and BVD/BVE

Motor	Without valve		Restricted values in operation with DBV and BVD/BVE							
			DBV				BVD/BVE			
NG	p_{nom}/p_{max} [bar]	$q_{V\ max}$ [L/min]	NG	p_{nom}/p_{max} [bar]	q_V [L/min]	Code	NG	p_{nom}/p_{max} [bar]	q_V [L/min]	Code
55	400/450	244	22	350/420	240	380	20 (BVD)	350/420	220	388
80		312								
107		380	32		400	370				378
107		380				380	25 (BVD/BVE)		320	388
160		496								
250	350/400	675	On request							

DBV _____ pressure-relief valve

BVD _____ counterbalance valve, double-acting

BVE _____ counterbalance valve, one-sided

Counterbalance valve BVD and BVE

Before finalizing your design, request a binding installation drawing. Dimensions in mm.

Dimensions

A6VE...HA1/2

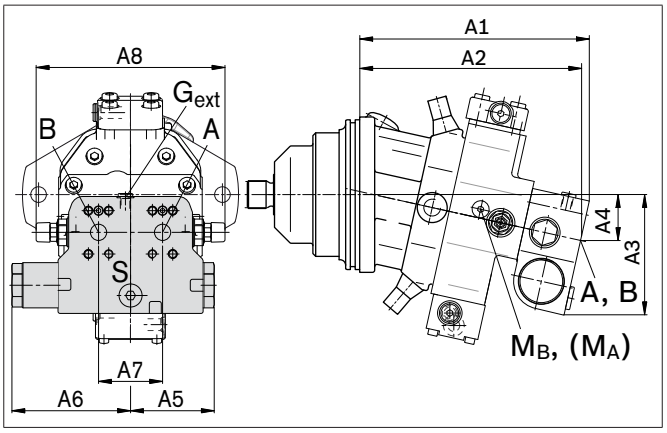

A6VE...HD or EP[1)]

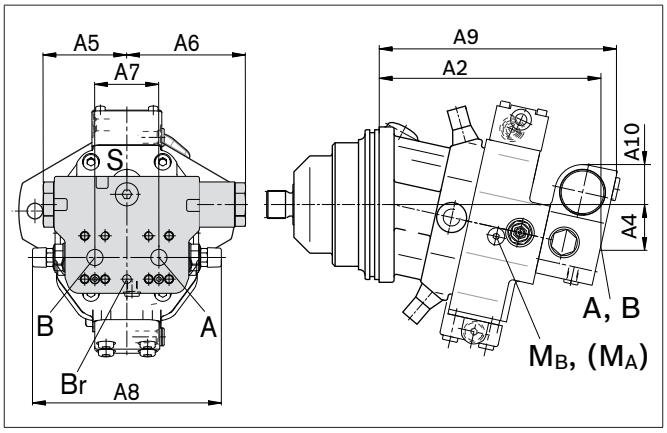

A6VE	Counterbalance valve											
NG...plate	Type	Ports	Dimensions									
		A, B	A1	A2	A3	A4	A5	A6	A7	A8	A9	A10
55...38	BVD20...17	3/4 in	252	243	143	50	98	139	75	222	267	50
80...38	BVD20...27	1 in	261	252	148	55	98	139	75	222	276	46
107...37	BVD20...28	1 in	280	271	152	59	98	139	84	234	295	41
107...38	BVD25...38	1 1/4 in	298	288	165	63	120.5	175	84	238	311	56
160...38	BVD25...38	1 1/4 in	334	324	170	68	120.5	175	84	238	349	51
107...38	BVE25...38	1 1/4 in	298	288	171	63	137	214	84	238	315	63
160...38	BVE25...38	1 1/4 in	334	324	176	68	137	214	84	238	349	59

Ports

Designation	Port for	Version	A6VE Plate	Standard	Size[2)]	Maximum pressure [bar][3)]	State[5)]
A, B	Service line			SAE J518	see table above	420	O
S	Infeed	BVD20		DIN 3852[4)]	M22 x 1.5; 14 deep	30	X
		BVD25, BVE25		DIN 3852[4)]	M27 x 2; 16 deep	30	X
Br	Brake release, reduced high-pressure	L	7	DIN 3852[4)]	M12 x 1.5; 12.5 deep	30	O
			8	DIN 3852[4)]	M12 x 1.5; 12 deep	30	O
G_{ext}	Brake release, high-pressure	S		DIN 3852[4)]	M12 x 1.5; 12.5 deep	420	X
M_A, M_B	Measuring pressure A and B			ISO 6149[4)]	M18 x 1.5; 14.5 deep	420	X

1) At the mounting version for the controls HD and EP, the cast-in port designations A and B on the counterbalance valve BVD do not correspond with the connection drawing of the A6VE motor.
The designation of the ports on the installation drawing of the motor is binding!

2) Observe the general instructions on page 40 for the maximum tightening torques.

3) Momentary pressure spikes may occur depending on the application. Keep this in mind when selecting measuring devices and fittings.

4) The spot face can be deeper than specified in the appropriate standard.

5) O = Must be connected (plugged on delivery)
X = Plugged (in normal operation)

Counterbalance valve BVD and BVE

Before finalizing your design, request a binding installation drawing. Dimensions in mm.

Mounting the counterbalance valve

When delivered, the counterbalance valve is mounted to the motor with two tacking screws (transport protection). The tacking screws may not be removed while mounting the service lines. If the counterbalance valve and motor are delivered separately, the counterbalance valve must first be mounted to the motor port plate using the provided tacking screws. The counterbalance valve is finally mounted to the motor by screwing on the SAE flange with the following screws:

6 screws (**1, 2, 3, 4, 5, 8**) _____ length B1+B2+B3
2 screws (**6, 7**) _____ length B3+B4

Tighten the screws in two steps in the specified sequence from 1 to 8 (see following scheme).

In the first step, the screws must be tightened with half the tightening torque, and in the second step with the maximum tightening torque (see following table).

Thread	Strength class	Tightening torque [Nm]
M6 x 1 (tacking screw)	10.9	15.5
M10 x 1.5	10.9	75
M12 x 1.75	10.9	130
M14 x 2	10.9	205

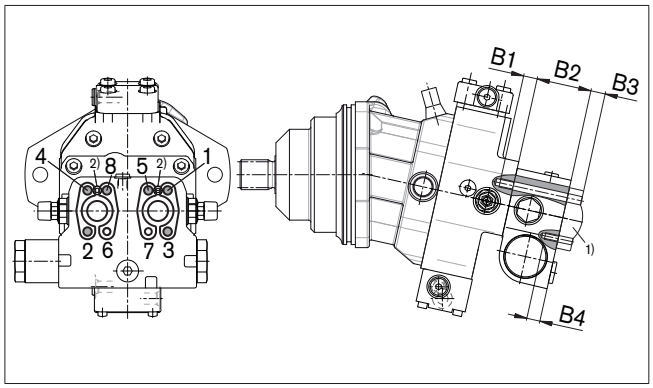

1) SAE flange
2) Tacking screw (M6 x 1, length = B1 + B2, DIN 912)

NG...plate	55...38	80...38, 107...37	107...38, 160...38
B1[3)]	M10 x 1.5 17 deep	M12 x 1.75 15 deep	M14 x 2 19 deep
B2	68	68	85
B3	customer-specific		
B4	M10 x 1.5 15 deep	M12 x 1.75 16 deep	M14 x 2 19 deep

3) Minimum required thread reach 1 x Ø-thread

Counterbalance valve integrated BVI

Before finalizing your design, request a binding installation drawing. Dimensions in mm.

Function

The integrated counterbalance valve is designed to reduce the danger of overspeeding and cavitation of axial piston motors in open circuits. Cavitation occurs if the motor speed is greater than it should be for the given input flow while braking or traveling downhill.

Note

– The integrated counterbalance valve must be ordered additionally, see ordering code below.

– The counterbalance valve does not replace the mechanical service brake and park brake.

– For the design of the brake release valve, we must know for the mechanical park brake:

- the pressure at the start of opening
- the volume of the counterbalance spool between minimum stroke (brake closed) and maximum stroke (brake released with 21 bar)
- the required closing time for a warm device (oil viscosity approx. 15 mm^2/s)

Application options

– Track drive in excavator crawlers

Ordering code

BVI			00		–	
01	02	03	04	05		06

Counterbalance valve

01	Counterbalance valve integrated	**BVI**

	Brake piston version	qv [L/min]	Material number	
02	Volume preselected	≤ 150	R902038832	**51**
		= 150 – 210	R902038936	**52**
		= 210 – 270	R902038833	**53**
		= 270 – 330	R902038834	**54**
		= 330 – 400	R902038835	**55**
		≥ 400	R902038836	**56**

	Throttle mounting	Material number	
03	Constant throttle	R909432302	**0008**
	Throttle pin	R909651165	**0603**

Check valve

04	Without residual opening	**00**

Brake release valve

05	With brake release valve (standard with HZ)	Without disable function	**1**
	With brake release valve (standard with HA)	With disable function	**2**

Standard / special version

06	Standard version	**0**
	Special version	**S**

Counterbalance valve integrated BVI

Table of values

Operating pressure	nominal pressure	p	bar	350
	peak pressure	p	bar	420
Flow, maximum		$q_{v\ max}$	L/min	400
Counterbalance spool	start of opening	p	bar	12
	fully open	p	bar	26
Pressure-reducing valve for brake release (fixed setting)	control pressure	p	bar	21^{+4}
	beginning of control	p	bar	10^{+4}

Comparison between port plates 02 and 22

Maximum permissible input flow with restricted nominal pressure 350 bar, maximum pressure 420 bar

	Without restrictions standard plate (02)		**Restricted values plate with integrated counterbalance valve (22)**		
Motor NG	**p_{nom}/p_{max} [bar]**	**$q_{V\ max}$ [L/min]**	**Code**	**p_{nom}/p_{max} [bar]**	**with BVI + DBV q_V [L/min]**
55	400/450	276	22	350/420	240
80		332			
107		410			
160		533			400

Infeed characteristic M22 x 1.5

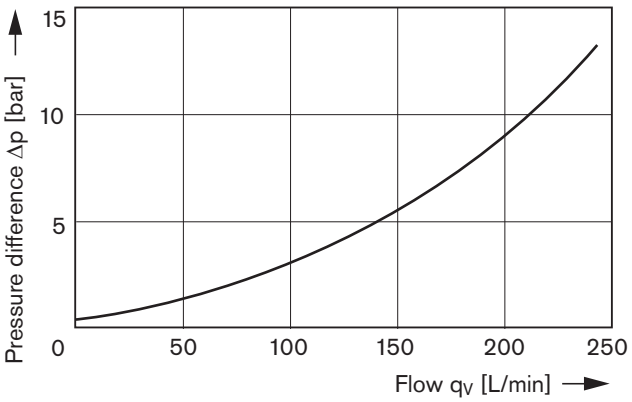

Infeed characteristic M27 x 2

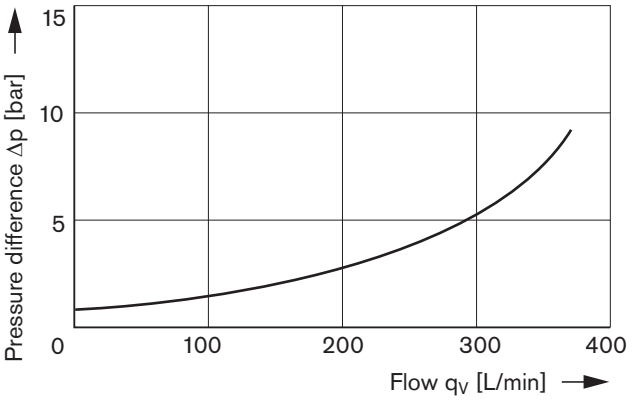

Counterbalance valve integrated BVI

Schematic HZ3

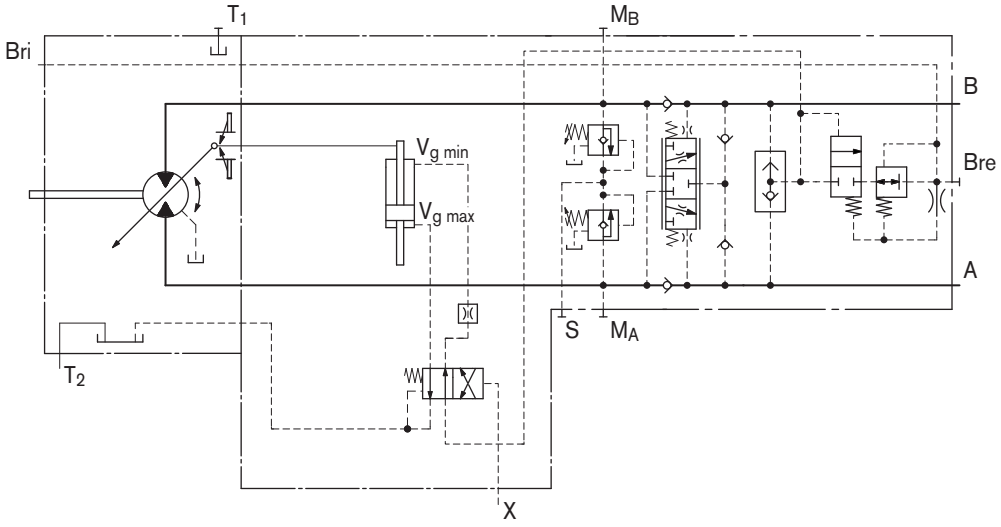

Schematic HA3

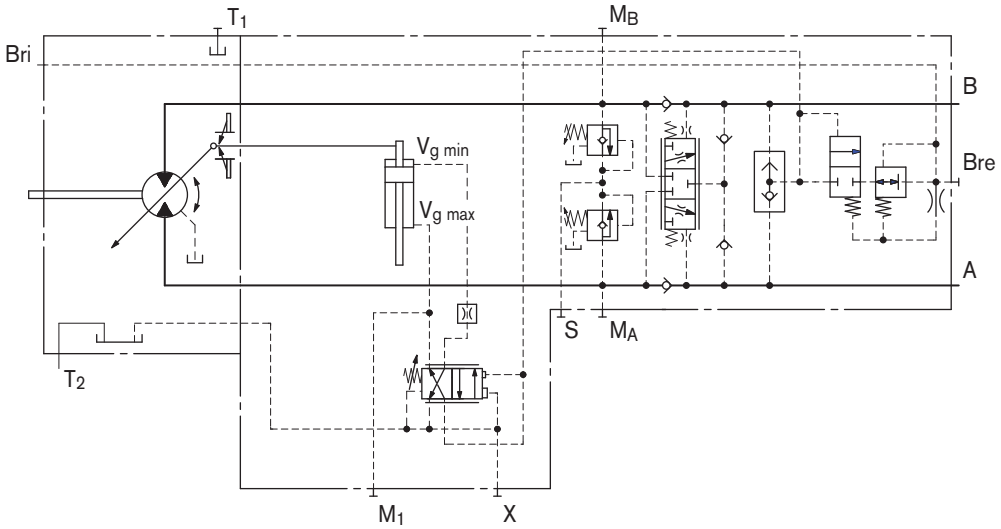

Schematic HA3.T

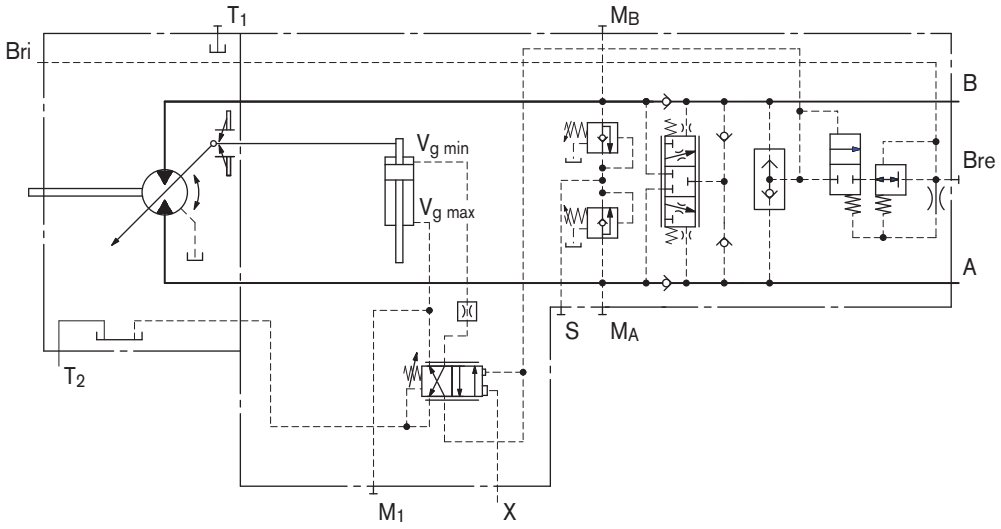

Speed sensor

Before finalizing your design, request a binding installation drawing. Dimensions in mm.

Version A6VE...U ("prepared for speed spensor", i.e. without sensor) is equipped with a toothed ring on the rotary group.

On deliveries "prepared for speed sensor", the port is plugged with a pressure-resistant cover.

With the speed sensor DSA mounted, a signal proportional to motor speed can be generated. The sensor measures the speed and direction of rotation.

Ordering code, technical data, dimensions and details on the connector, plus safety instructions about the sensor can be found in the relevant data sheet (DSA – RE 95133).

The sensor is mounted on the port provided for this purpose with a mounting bolt.

We recommend ordering the A6VE variable motor complete with installed sensor.

Schematic

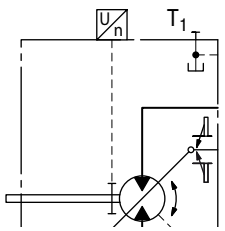

Dimensions

Version "V" with mounted speed sensor

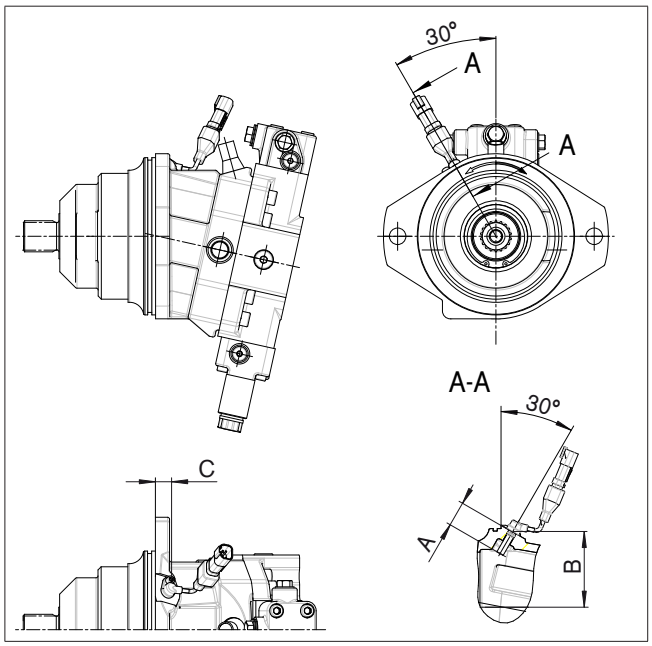

NG	55	80	107	160	250
Number of teeth	54	58	67	75	86
A	32	32	32	32	on request
B	83.3	87.3	96.3	104.3	on request
C	26	16.5	14.2	28.5	on request

Installation instructions

General

During commissioning and operation, the axial piston unit must be filled with hydraulic fluid and air bled. This must also be observed following a relatively long standstill as the axial piston unit may drain back to the reservoir via the hydraulic lines.

The case drain fluid in the motor housing must be directed to the reservoir via the highest available drain port (T_1, T_2).

For combinations of multiple units, make sure that the respective case pressure in each unit is not exceeded. In the event of pressure differences at the drain ports of the units, the shared drain line must be changed so that the minimum permissible case pressure of all connected units is not exceeded in any situation. If this is not possible, separate drain lines must be laid if necessary.

To achieve favorable noise values, decouple all connecting lines using elastic elements and avoid above-reservoir installation.

In all operating conditions, the drain line must flow into the reservoir below the minimum fluid level.

Installation position

See the following examples 1 to 6.
Further installation positions are possible upon request.

Recommended installation positions: 1 and 2.

Note
In certain installation conditions, an influence on the control characteristics can be expected. Gravity, dead weight and case pressure can cause minor shifts in control characteristics and changes in response time.

Installation position	Air bleed	Filling
1	–	T_2, T_1
2	–	T_2, T_1
3	–	T_2, T_1
4	L_1	T_2, T_1 (L_1)
5	L_1	T_2, T_1 (L_1)
6	L_1	T_2, T_1 (L_1)

L_1	Filling / air bleed
T_1, T_2	Drain port
$h_{t\,min}$	Minimum required immersion depth (200 mm)
h_{min}	Minimum required spacing to reservoir bottom (100 mm)

Below-reservoir installation (standard)

Below-reservoir installation means that the axial piston unit is installed outside of the reservoir below the minimum fluid level.

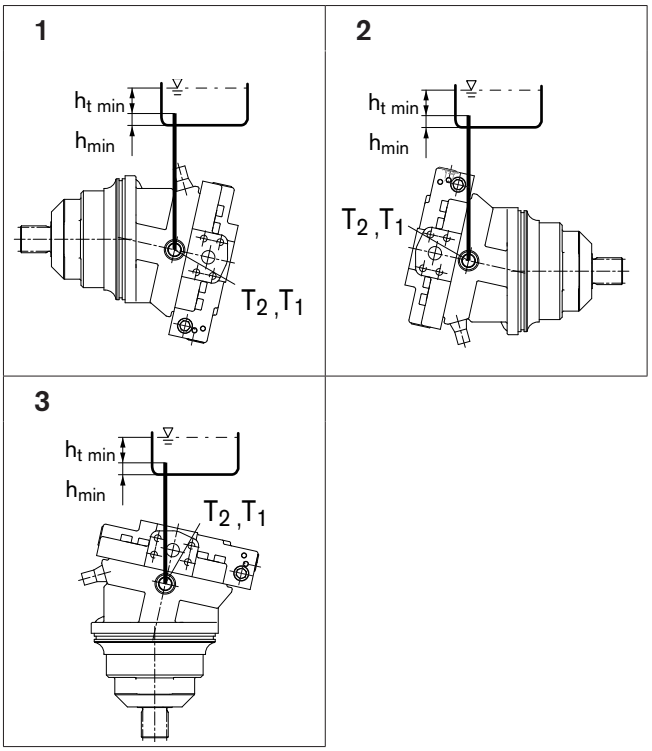

Above-reservoir installation

Above-reservoir installation means that the axial piston unit is installed above the minimum fluid level of the reservoir.

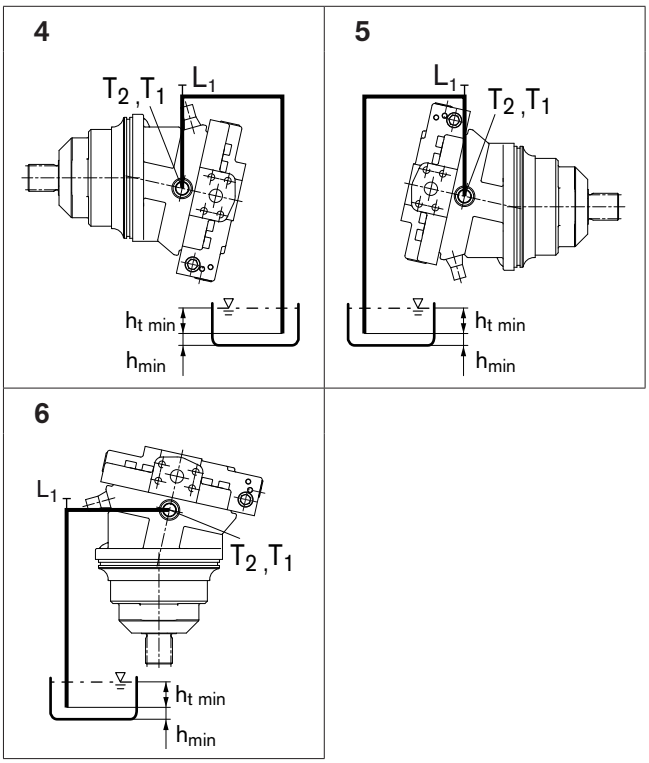

General instructions

– The motor A6VE is designed to be used in open and closed circuits.

– The project planning, installation and commissioning of the axial piston unit requires the involvement of qualified personnel.

– Before using the axial piston unit, please read the corresponding instruction manual completely and thoroughly. If necessary, these can be requested from Bosch Rexroth.

– During and shortly after operation, there is a risk of burns on the axial piston unit and especially on the solenoids. Take appropriate safety measures (e. g. by wearing protective clothing).

– Depending on the operating conditions of the axial piston unit (operating pressure, fluid temperature), the characteristic may shift.

– Service line ports:

  - The ports and fastening threads are designed for the specified maximum pressure. The machine or system manufacturer must ensure that the connecting elements and lines correspond to the specified application conditions (pressure, flow, hydraulic fluid, temperature) with the necessary safety factors.

  - The service line ports and function ports can only be used to accommodate hydraulic lines.

– The data and notes contained herein must be adhered to.

– The product is not approved as a component for the safety concept of a general machine according to ISO 13849.

– The following tightening torques apply:

  - Fittings:
    Observe the manufacturer's instruction regarding tightening torques for the fittings used.

  - Mounting bolts:
    For mounting bolts with metric ISO threads according to DIN 13, we recommend checking the tightening torque in individual cases in accordance with VDI 2230.

  - Female threads in the axial piston unit:
    The maximum permissible tightening torques $M_{G\ max}$ are maximum values for the female threads and must not be exceeded. For values, see the following table.

  - Threaded plugs:
    For the metallic threaded plugs supplied with the axial piston unit, the required tightening torques of threaded plugs M_V apply. For values, see the following table.

Ports Standard	Size of thread	Maximum permissible tightening torque of the female threads $M_{G\ max}$	Required tightening torque of the threaded plugs M_V[1)]	WAF hexagon socket of the threaded plugs
DIN 3852	M12 x 1.5	50 Nm	25 Nm[2)]	6 mm
	M14 x 1.5	80 Nm	35 Nm	6 mm
	M16 x 1.5	100 Nm	50 Nm	8 mm
	M18 x 1.5	140 Nm	60 Nm	8 mm
	M22 x 1.5	210 Nm	80 Nm	10 mm
	M26 x 1.5	230 Nm	120 Nm	12 mm
	M27 x 2	330 Nm	135 Nm	12 mm
	M33 x 2	540 Nm	225 Nm	17 mm
	M42 x 2	720 Nm	360 Nm	22 mm

1) The tightening torques apply for screws in the "dry" state as received on delivery and in the "lightly oiled" state for installation.

2) In the "lightly oiled" state, the M_V is reduced to 17 Nm for M12 x 1.5.

Variable plug-in motor
A6VE Series 65

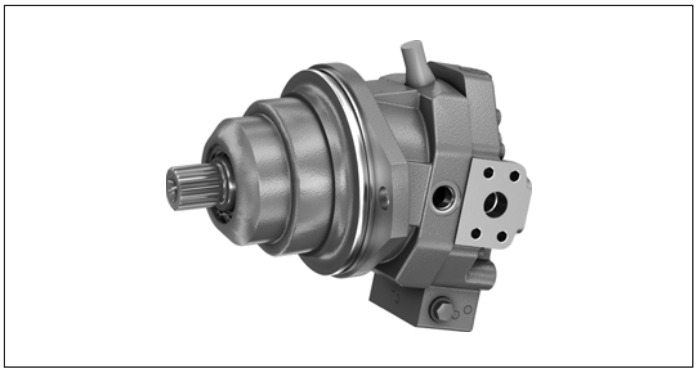

- High pressure motor for integration in mechanical gearbox
- Sizes 55 to 200
- Nominal pressure 400 bar
- Maximum pressure 450 bar
- Open and closed circuits

Features

- Space-saving construction due to recessed mounting flange
- Easy to install. Simply plug into the mechanical gearbox.
- Wide control range (can be swiveled to zero)
- Approved for very high rotational speeds
- High torque
- Optional with flushing and boost-pressure valve mounted
- Optional with integrated or mounted counterbalance valve
- Bent-axis design

Contents

Type code	2
Hydraulic fluids	5
Flow direction	6
Working pressure range	7
Technical data	8
HP – Proportional hydraulic control	10
EP – Proportional control, electric	13
HZ – Two-point control, hydraulic	15
EZ – Two-point control, electric	16
HA – Automatic high-pressure related control	17
Dimensions Sizes 55 to 160	20
Dimensions Size 215	22
Connector for solenoids	24
Flushing and boost-pressure valve	25
BVD and BVE counterbalance valves	27
Integrated BVI counterbalance valve	30
Speed sensor	35
Setting range for displacement	36
Installation instructions	38
Project planning notes	40
Safety instructions	41

RE 91 15/05.2012, Bosch Rexroth AG

Type code

01	02	03	04	05	06	07	08	09	10		11	12	13	14	15	16	17	18	19	20		21
A6V	**E**					**0**	**0**			**/**	**65**	**M**	**W**	**V**	**0**						**–**	

Axial piston unit

01	Bent-axis design, variable, nominal pressure 400 bar, maximum pressure 450 bar	**A6V**

Operating mode

02	Plug-in motor	**E**

Size (NG)

03	Geometric displacement, see “Technical data” on page 8	**055**	**080**	**107**	**160**	**200**	

Control device				**055**	**080**	**107**	**160**	**200**	
04	Proportional control Hydraulic	positive control	Δp_{St} = 10 bar	●	●	●	●	●	**HP1**
			Δp_{St} = 25 bar	●	●	●	●	●	**HP2**
		negative control	Δp_{St} = 10 bar	●	●	●	●	●	**HP5**
			Δp_{St} = 25 bar	●	●	●	●	●	**HP6**
	Proportional control electrical	positive control	U = 12 V	●	●	●	●	●	**EP1**
			U = 24 V	●	●	●	●	●	**EP2**
		negative control	U = 12 V	●	●	●	●	●	**EP5**
			U = 24 V	●	●	●	●	●	**EP6**
	Two-point control	negative control		–	–	–	●	●	**HZ5**
	Hydraulic			●	●	●	●[1]	–	**HZ7**
	Two-point control electrical	negative control	U = 12 V	–	–	–	●	●	**EZ5**
			U = 24 V	–	–	–	●	●	**EZ6**
			U = 12 V	●	●	●	–	–	**EZ7**
			U = 24 V	●	●	●	–	–	**EZ8**
	Automatic control High pressure dependent, positive control	with minimum pressure increase	Δp ≤ approx. 10 bar	●	●	●	●	●	**HA1**
		with pressure increase	Δp = 100 bar	●	●	●	●	●	**HA2**
		with minimum pressure increase	Δp ≤ approx. 10 bar	○	○	●	●	–	**HA3**[1]

Pressure control/override		**055**	**080**	**107**	**160**	**200**	
05	Without pressure control/override	●	●	●	●	●	**00**
	Pressure control fixed setting, only for HP5, HP6, EP5 and EP6	●	●	●	●	●	**D1**
	Override of the HA1, HA2, and HA3 controls, hydraulic remote controlled, proportional	●	●	●	●	●	**T3**

Connector for solenoids[2] (see page 24)

06	Without connector (without solenoid, only for hydraulic control)	**0**
	DEUTSCH - molded connector, 2-pin, without suppressor diode	**P**

Additional function 1

07	Without additional function	**0**

Additional function 2

08	Without additional function	**0**

● = Available ○ = On request – = Not available

1) Only possible in conjunction with port plate 6 (integrated counterbalance valve)

2) Connectors for other electric components may deviate

01	02	03	04	05	06	07	08	09	10		11	12	13	14	15	16	17	18	19	20		21
A6V	**E**					**0**	**0**			**/**	**65**	**M**	**W**	**V**	**0**						**–**	

Response time damping (for selection, see control)

09	Without damping (standard with HP and EP)		**0**
	Damping	HP, EP, HP5,6D. and EP5,6D., HZ, EZ, HA with BVD/BVE counterbalance valves	**1**
		One-sided in inlet to large stroking chamber (HA)	**4**

Setting range for displacement[3)]

10	$V_{g\,max}$-setting screw	$V_{g\,min}$-setting screw	**055**	**080**	**107**	**160**	**200**	
	No setting screw	short (0-adjustable)	●	●	●	●	●	**A**
		medium	●	●	●	●	●	**B**
		long	●	●	●	●	●	**C**
		extra long	–	–	●	●	●	**D**
	short	short (0-adjustable)	●	●	●	●	●	**E**
		medium	●	●	●	●	●	**F**
		long	●	●	●	●	●	**G**
		extra long	–	–	●	●	●	**H**
	medium	short (0-adjustable)	●	●	●	●	●	**J**
		medium	●	●	●	●	●	**K**
		long	●	●	●	●	●	**L**
		extra long	–	–	●	●	●	**M**

Series

11	Series 6, index 5	**65**

Version of port and fastening threads

12	Metric, port thread with O-ring seal according to ISO 6149	**M**

Direction of rotation

13	Viewed on drive shaft, bidirectional	**W**

Sealing material

14	FKM (fluoroelastomer)	**V**

Drive shaft bearing

15	Standard bearing	**0**

Mounting flange			**055**	**080**	**107**	**160**	**200**	
16	ISO 3019-2	160-2	●	–	–	–	–	**P2**
		190-2	–	●	–	–	–	**Y2**
		200-2	–	–	●	●	–	**S2**
		260-4	–	–	–	–	●	**Z2**

Drive shaft			**055**	**080**	**107**	**160**	**200**	
17	Splined shaft DIN 5480	W30×2×14×9g	●	–	–	–	–	**Z6**
		W35×2×16×9g	●	●	–	–	–	**Z8**
		W40×2×18×9g	–	●	●	–	–	**Z9**
		W45×2×21×9g	–	–	●	●	–	**A1**
		W50×2×24×9g	–	–	–	●	●	**A2**

● = Available ○ = On request – = Not available

3) The adjustment values for the setting screws can be found in the table (page 36).

Type code

01	02	03	04	05	06	07	08	09	10		11	12	13	14	15	16	17	18	19	20		21
A6V	**E**					**0**	**0**			**/**	**65**	**M**	**W**	**V**	**0**						**–**	

Working port			055	080	107	160	200	
18	SAE working ports **A** and **B** at rear		●	●	●	●	●	**1**
	SAE working ports **A** and **B** lateral, opposite		●	●	●	●	●	**2**
	SAE working ports **A** and **B** at bottom only with integrated BVI counterbalance valve[4]		○	○	●	●	–	**6**
	Port plate with 1-level pressure relief valves for mounting a counterbalance valve[5]	BVD20	●	●	●	–	–	**7**
		BVD25, BVE25	–	–	●	●	●	**8**

Valve (see page 25 to 34)			055	080	107	160	200	
19	Without valve		●	●	●	●	●	**0**
	With BVD/BVE counterbalance valves mounted[6]		●	●	●	●	●	**W**
	Integrated brake release valve (only with port plate 6)	For external piping	○	○	●	●	–	**Y**
		for internal ducting	○	○	●	●	–	**Z**
	With flushing and boost-pressure valve mounted, flushing on both sides Flushing flow when: $\Delta p = p_{ND} - p_G = 25$ bar and $\nu = 10$ mm²/s (p_{ND} = low pressure, p_G = case pressure) Only possible with port plates 1 and 2	**Flushing flow q_v [l/min]**						
		3.5	●	●	●	–	–	**A**
		5	●	●	●	–	–	**B**
		8	●	●	●	●	●	**C**
		10	●	●	●	●	●	**D**
		14	●	●	●	–	–	**F**
		15	–	–	–	●[7]	●[7]	**G**
		18	–	–	●[7]	●[7]	●[7]	**I**
		21	–	–	●[7]	●[7]	●[7]	**J**
		27	–	–	●[7]	●[7]	●[7]	**K**
		31	–	–	●[7]	●[7]	●[7]	**L**
		37	–	–	–	●[7]	●[7]	**M**

Speed sensor (see page 35)		055	080	107	160	200	
20	Without speed sensor	●	●	●	●	●	**0**
	Prepared with DSA speed sensor	●	●	●	●	●	**U**
	With DSA speed sensor mounted[8]	●	●	●	●	●	**V**

Standard / special version		
21	Standard version	**0**
	Standard version with installation variants, e.g. **T** ports open and closed contrary to standard	**Y**
	Special version	**S**

● = Available ○ = On request – = Not available

Notice

▶ Note the project planning notes on page 40.

4) Only for HZ7 and HA3. Supplement specification for integrated BVI counterbalance valve, see separate type code on page 30. Note the restrictions described on page 31.

5) Possible only in combination with HP, EP and HA control Note the restrictions described on page 27.

6) Type code for counterbalance valve to be quoted separately in accordance with data sheet 95522 – BVD or 95525 – BVE). Note the restrictions described on pages 27 and 30.

7) Not for EZ7, EZ8, HZ7 and HA3

8) Specify the type code separately for sensor in accordance with data sheet 95133 – DSA and observe the requirements for the electronics.

Hydraulic fluids

The A6VE variable motor is designed for operation with HLP mineral oil according to DIN 51524. Application instructions and requirements for hydraulic fluids should be taken from the following data sheets before the start of project planning:

- 90220: Hydraulic fluids based on mineral oils and related hydrocarbons
- 90221: Environmentally acceptable hydraulic fluids
- 90222: Fire-resistant, water-free hydraulic fluids (HFDR/HFDU)
- 90223: Fire-resistant, water-containing hydraulic fluids (HFC, HFB)
- 90225: Axial piston units for operation with water-free and water-containing fire-resistant hydraulic fluids (HFDR, HFDU, HFB, HFC).

The variable motor A6VE is not suitable for operation with HFA hydraulic fluid. If operating with HFB-, HFC- and HFD or environmentally acceptable hydraulic fluids, the limitations regarding technical data or other seals must be observed.

Notes on selection of hydraulic fluid

The hydraulic fluid should be selected such that the operating viscosity in the operating temperature range is within the optimum range (v_{opt} see selection diagram).

Notice

At no point of the component may the temperature be higher than 115 °C. The temperature difference specified in the table is to be taken into account when determining the viscosity in the bearing.

If the above conditions cannot be met due to extreme operating parameters,

we recommend the use of a flushing and boost-pressure valve (see page 25).

3

Viscosity and temperature of hydraulic fluids

	Viscosity	Temperature	Comment
Cold start[1)]	$v_{max} \leq 1600$ mm²/s	$\theta_{St} \geq$ -40 °C	$t \leq 3$ min, $n \leq 1000$ min^{-1}, without load $p \leq 50$ bar
Permissible temperature difference		$\Delta T \leq 25$ K	between axial piston unit and hydraulic fluid in the system
Warm-up phase	$v =$ 1600 to 400 mm²/s	$\theta =$ -40 °C to -25 °C	At $p \leq 0.7 \times p_{nom}$, $n \leq 0.5 \times n_{nom}$ and $t \leq 15$ min
Continuous operation	$v =$ 400 to 10 mm²/s		this corresponds, for VG 46 for example, to a temperature range of +5 °C to +85 °C (see selection diagram)
		$\theta =$ -25 °C to +103 °C	measured at port **T** Observe the permissible temperature range of the shaft seal (ΔT = approx. 12 K between bearing/shaft seal and port **T**)
	$v_{opt} =$ 36 to 16 mm²/s		Range of optimum operating viscosity and efficiency
Short-term operation	$v_{min} \geq$ 7 mm²/s		$t < 3$ min, $p < 0.3 \times p_{nom}$

1) For application cases below -25 °C, an NBR shaft seal is required (permissible temperature range -40 °C to +90 °C).

▼ **Selection diagram**

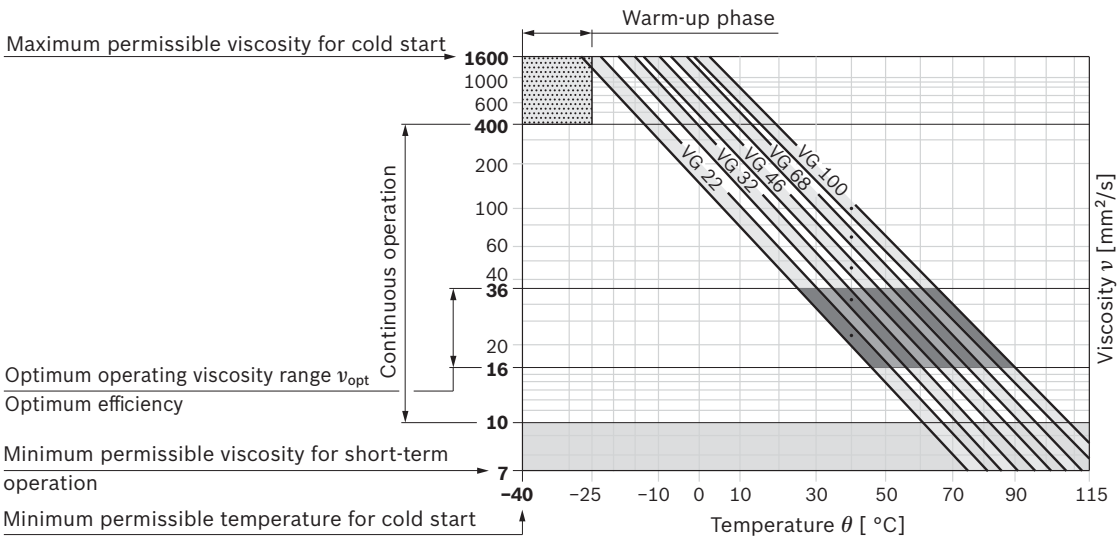

RE 91 15/05.2012, Bosch Rexroth AG

Filtration of the hydraulic fluid

Finer filtration improves the cleanliness level of the hydraulic fluid, which increases the service life of the axial piston unit.

A cleanliness level of at least 20/18/15 is to be maintained according to ISO 4406.

At very high hydraulic fluid temperatures (90 °C to maximum 103 °C, measured at port **T**), a cleanliness level of at least 19/17/14 according to ISO 4406 is necessary.

Effect of case pressure on beginning of control

An increase in the case pressure leads to an increase in the beginning of control for the HP and HA.T3 controls.

For EP and HA control, an increase in case pressure has no effect on the beginning of control.

The factory setting for the beginning of control is made at p_{abs} = 2 bar case pressure.

Flow direction

Direction of rotation, viewed on drive shaft	
clockwise	counter-clockwise
A to **B**	**B** to **A**

Shaft seal

Permissible pressure loading

The service life of the shaft seal is influenced by the rotational speed of the axial piston unit and the leakage pressure in the housing (case pressure). Momentary (t < 0.1 s) pressure peaks of up to 10 bar are permitted. The service life of the shaft seal decreases with increasing frequency of pressure peaks and increasing mean differential pressure. The case pressure must be equal to or higher than the ambient pressure.

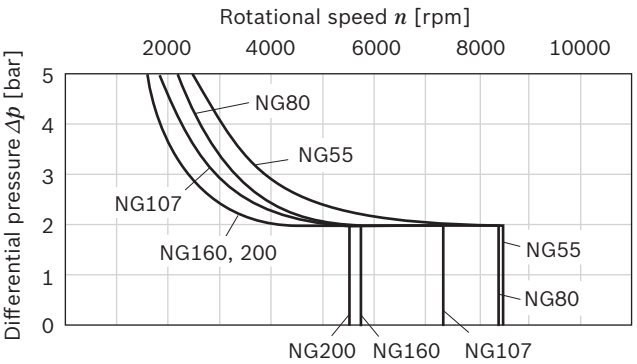

The FKM shaft seal ring may be used for leakage temperatures from -25 °C to +115 °C. For application cases below -25 °C, an NBR shaft seal is required (permissible temperature range: -40 °C to +90 °C).

Working pressure range

Pressure at working port A or B		Definition
Nominal pressure p_{nom}	400 bar	The nominal pressure corresponds to the maximum design pressure.
Maximum pressure p_{max}	450 bar	The maximum pressure corresponds to the maximum working pressure within the single operating period. The sum of the single operating periods must not exceed the total operating period.
Single operating period	10 s	
Total operating period	300 h	
Minimum pressure (high-pressure side)	25 bar	Minimum pressure at the high-pressure side (**A** or **B**) required to prevent damage to the axial piston unit.
Minimum pressure – operation as a pump (inlet)	See diagram below	To avoid damage to the axial piston motor during operation as a pump (change of the high-pressure side at constant direction of rotation, e.g. during braking processes) a minimum pressure has to be ensured at the working port (inlet). The minimum required pressure is dependent on the rotational speed and displacement of the axial piston unit (see characteristic curve).
Summation pressure p_{Su} (pressure **A** + pressure **B**)	700 bar	The summation pressure is the sum of the pressures at the working ports (**A** and **B**).
Rate of pressure change $R_{A\,max}$		Maximum permissible speed of pressure build-up and reduction during a pressure change across the entire pressure range.
with built-in pressure relief valve	9000 bar/s	
without pressure relief valve	16000 bar/s	

▼ **Rate of pressure change $R_{A\,max}$**

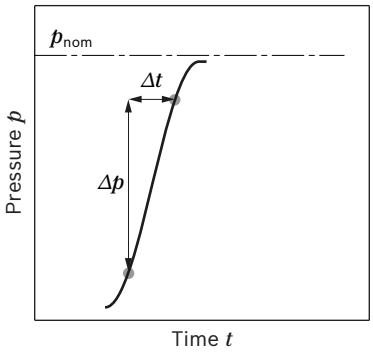

▼ **Pressure definition**

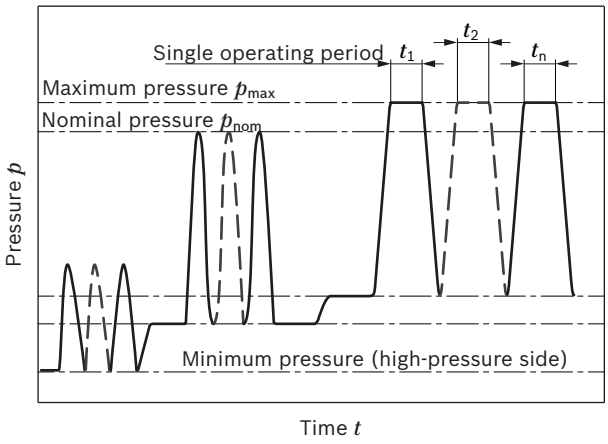

Total operating period = $t_1 + t_2 + ... + t_n$

▼ **Minimum pressure – operation as a pump (inlet)**

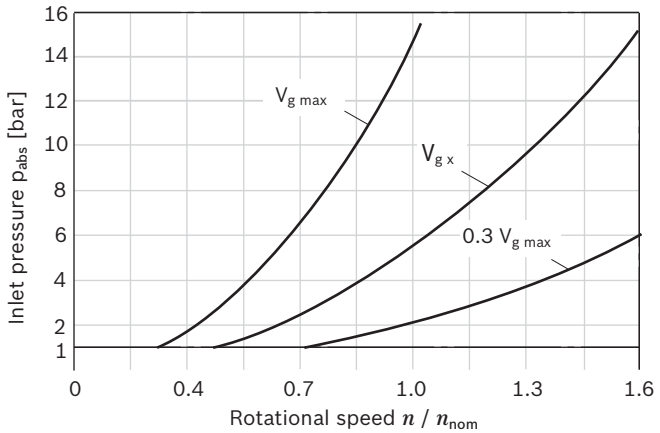

This diagram is only valid for the optimum viscosity range of n_{opt} = 36 to 16 mm²/s.
If the above mentioned conditions cannot be ensured please contact us.

Notice
Working pressure range valid when using hydraulic fluids based on mineral oils. Values for other hydraulic fluids, please contact us.

Technical data

Size		NG		55	80	107	160	200
Displacement geometric, per revolution		$V_{g\,max}$	cm³	54.8	80	107	160	200
		$V_{g\,min}$	cm³	0	0	0	0	0
		$V_{g\,x}$	cm³	35	51	68	61	76
Maximum rotational speed[1] (observing the maximum permissible inlet flow)	at $V_{g\,max}$	n_{nom}	rpm	4450	3900	3550	3100	2900
	where $V_g < V_{g\,x}$ (see diagram)	n_{max}	rpm	7000	6150	5600	4900	4600
	where $V_{g\,0}$	n_{max}	rpm	8350	7350	6300	5500	5100
Inlet flow[2]	at n_{nom} and $V_{g\,max}$	$q_{v\,max}$	l/min	244	312	380	496	580
Torque[3]	at $V_{g\,max}$ and Δp = 400 bar	T	Nm	349	509	681	1019	1273
Rotary stiffness	$V_{g\,max}$ to $V_g/2$	c_{min}	kNm/rad	10	16	21	35	44
	$V_g/2$ to 0 (interpolated)	c_{min}	kNm/rad	32	48	65	105	130
Moment of inertia for rotary group		J_{TW}	kgm²	0.0042	0.008	0.0127	0.0253	0.0353
Maximum angular acceleration		α	rad/s²	31500	24000	19000	11000	11000
Case volume		V	l	0.75	1.2	1.5	2.4	3.0
Weight approx.	Port plate 1, 2, 7, and 8	m	kg	28	36	46	62	78
	Port plate 6	m	kg	37	45	52	70	–

▼ **Permissible displacement in relation to rotational speed**

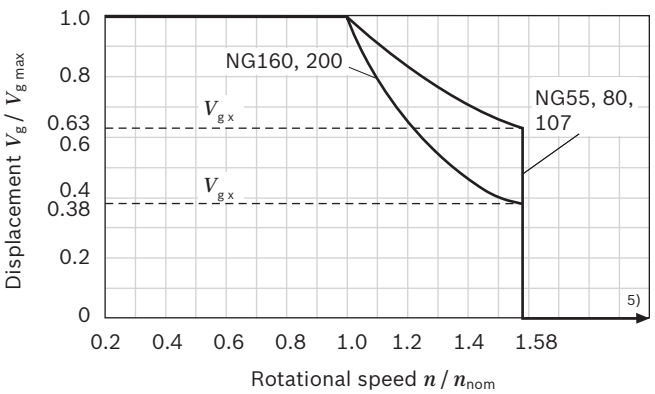

Notice

- Theoretical values, without efficiency and tolerances; values rounded
- Operation above the maximum values or below the minimum values may result in a loss of function, a reduced service life or in the destruction of the axial piston unit. Other permissible limit values, such as speed variation, reduced angular acceleration as a function of the frequency and the permissible angular acceleration at start (lower than the maximum angular acceleration) can be found in data sheet 90261.

Determining the operating characteristics				
Inlet flow	q_v	= $\frac{V_g \times n}{1000 \times \eta_v}$		[l/min]
Rotational speed	n	= $\frac{q_v \times 1000 \times \eta_v}{V_g}$		[rpm]
Torque	T	= $\frac{V_g \times \Delta p \times \eta_{hm}}{20 \times \pi}$		[Nm]
Power	P	= $\frac{2 \pi \times T \times n}{60000}$	= $\frac{q_v \times \Delta p \times \eta_t}{600}$	[kW]

Key

V_g Displacement per revolution [cm³]
Δp Differential pressure [bar]
n Rotational speed [rpm]
η_v Volumetric efficiency
η_{hm} Hydraulic-mechanical efficiency
η_t Total efficiency ($\eta_t = \eta_v \times \eta_{hm}$)

1) The values are applicable:
   – for the optimum viscosity range from v_{opt} = 36 to 16 mm²/s
   – with hydraulic fluid based on mineral oils
2) Observe limitation of input flow due to counterbalance valve (page 27).
3) Torque without radial force, with radial force see page 9.
4) Values in this range on request

Permissible radial and axial forces of the drive shafts

Size	NG		55		80		107		160		200
Drive shaft			W30	W35	W35	W40	W40	W45	W45	W50	W50
Maximum radial force[1] at distance a (from shaft collar) 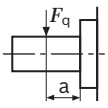	$F_{q\ max}$	N	7581	8069	10867	10283	13758	12215	18278	16435	20532
	a	mm	17.5	20.0	20.0	22.5	22.5	25.0	25.0	27.5	27.5
Maximum torque at $F_{q\ max}$	$T_{q\ max}$	Nm	281	349	470	509	681	681	1019	1019	1273
Maximum differential pressure at V_{gmax} and $F_{q\ max}$	$\Delta p_{q\ max}$	bar	322	400	369	400	400	400	400	400	400
Maximum axial force, at standstill or depressurized operation 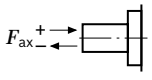	+ $F_{ax\ max}$	N	0	0	0	0	0	0	0	0	0
	– $F_{ax\ max}$	N	500	500	710	710	900	900	1120	1120	1250
Permissible axial force per bar working pressure	+ $F_{ax\ perm/bar}$	N/bar	7.5	7.5	9.6	9.6	11.3	11.3	15.1	15.1	17.0

Effect of radial force F_q on the service life of bearings

By selecting a suitable direction of radial force F_q, the load on the bearings, caused by the internal rotary group forces can be reduced, thus optimizing the service life of the bearings. Recommended position of mating gear is dependent on direction of rotation. Examples:

▼ **Toothed gear output drive**

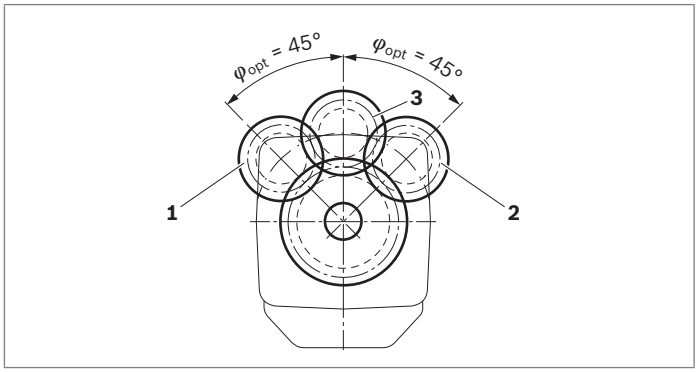

1 "Counter-clockwise" rotation, pressure at port **B**
2 "Clockwise" rotation, pressure at port **A**
3 Bidirectional direction of rotation

Notice

- The values given are maximum values and do not apply to continuous operation.
- The permissible axial force in direction $-F_{ax}$ is to be avoided as the lifetime of the bearing is reduced.
- Special requirements apply in the case of belt drives. Please contact us.

1) With intermittent operation

HP – Proportional hydraulic control

The proportional hydraulic control provides infinite adjustment of the displacement. The control is proportional to the pilot pressure at port **X**.

HP1, HP2 positive control

- Beginning of control at $V_{g\,min}$ (minimum torque, maximum permissible rotational speed at minimum pilot pressure)
- End of control at $V_{g\,max}$ (maximum torque, minimum rotational speed at maximum pilot pressure)

HP5, HP6 negative control

- Beginning of control at $V_{g\,max}$ (maximum torque, minimum rotational speed at minimum pilot pressure).
- End of control at $V_{g\,min}$ (minimum torque, maximum permissible rotational speed, at maximum pilot pressure).

Notice

- Maximum permissible pilot pressure: p_{St} = 100 bar
- The control oil is internally taken out of the high pressure side of the motor (**A** or **B**). For reliable control, a working pressure of at least 30 bar is required in **A** (**B**). If a control operation is performed at a working pressure < 30 bar, an auxiliary pressure of at least 30 bar must be applied at port **G** using an external check valve. For lower pressures, please contact us.
  Bear in mind that pressures up to 450 bar can occur at port **G**.
- Specify the desired beginning of control in plain text when ordering, e.g. beginning of control at 10 bar.
- The beginning of control and the HP characteristic curve are influenced by the case pressure. An increase in the case pressure causes an increase in the beginning of control (see page 6) and thus a parallel displacement of the characteristic curve.
- A leakage flow of maximum 0.3 l/min can occur at port **X** due to internal leakage (working pressure > pilot pressure). The control is to be suitably configured to avoid an independent build-up of pilot pressure.

Response time damping

The response time damping impacts the pivot behavior of the motor and consequently the machine response speed.

Standard for sizes 55 to 200

HP without damping.

HP.D with throttle pin on both sides, symmetrical (see table)

Optional for sizes 55 to 200

HP with throttle pin on both sides, symmetrical (see table)

▼ **Throttle pin overview**

Size	55	80	107	160	200
Groove size [mm]	0.45	0.45	0.55	0.55	0.65

HP1, HP5 – pilot pressure increase Δp_{St} = 10 bar

HP1 positive control

A pilot pressure increase of 10 bar at port X results in an increase in displacement from $V_{g\,min}$ to $V_{g\,max}$.

HP5 negative control

A pilot pressure increase of 10 bar at port **X** results in a decrease in displacement from $V_{g\,max}$ to $V_{g\,min}$.

Beginning of control, setting range 2 to 20 bar

Standard setting: beginning of control at 3 bar (end of control at 13 bar)

▼ **Characteristic curve**

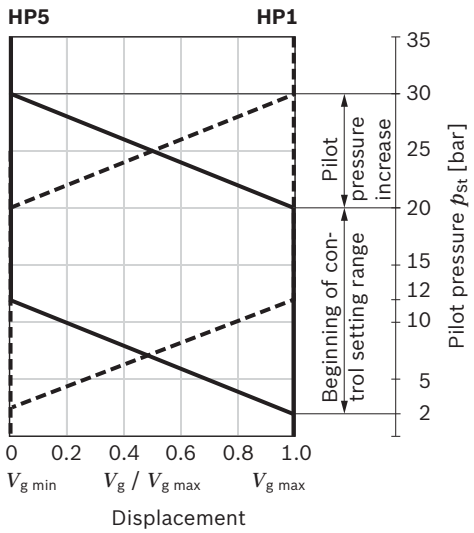

HP2, HP6 pilot pressure increase Δp_{St} = 25 bar

HP2 positive control

A pilot pressure increase of 25 bar at port **X** results in an increase in displacement from $V_{g\,min}$ to $V_{g\,max}$.

HP6 negative control

A pilot pressure increase of 25 bar at port **X** results in a decrease in displacement from $V_{g\,max}$ to $V_{g\,min}$.

Beginning of control, setting range 5 to 35 bar

Standard setting:

beginning of control at 10 bar (end of control at 35 bar)

▼ **Characteristic curve**

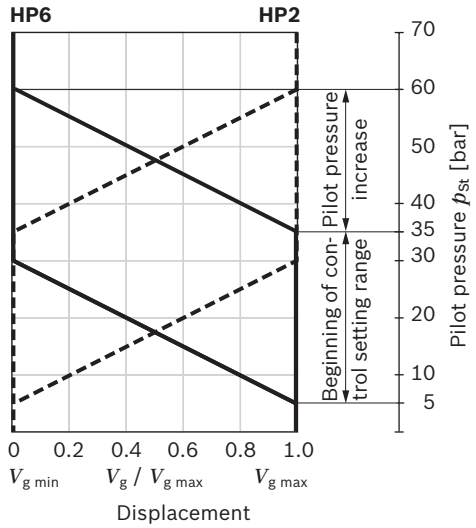

▼ **Circuit diagram HP1, HP2 (positive control)**

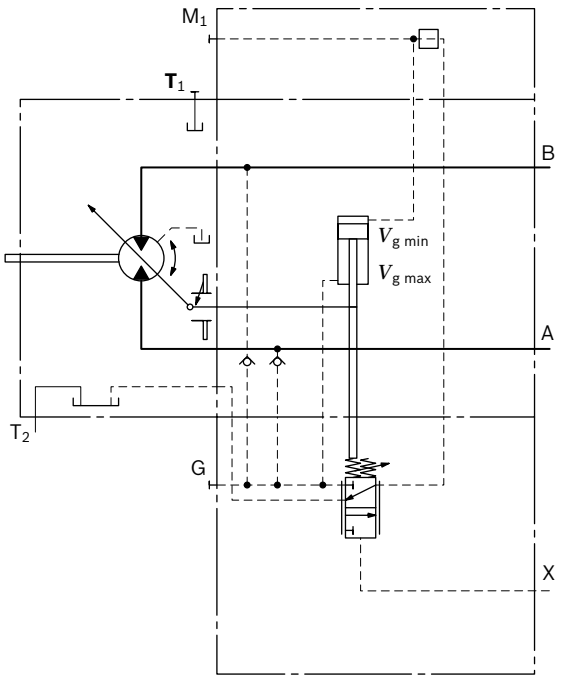

▼ **Circuit diagram HP5, HP6 (negative control)**

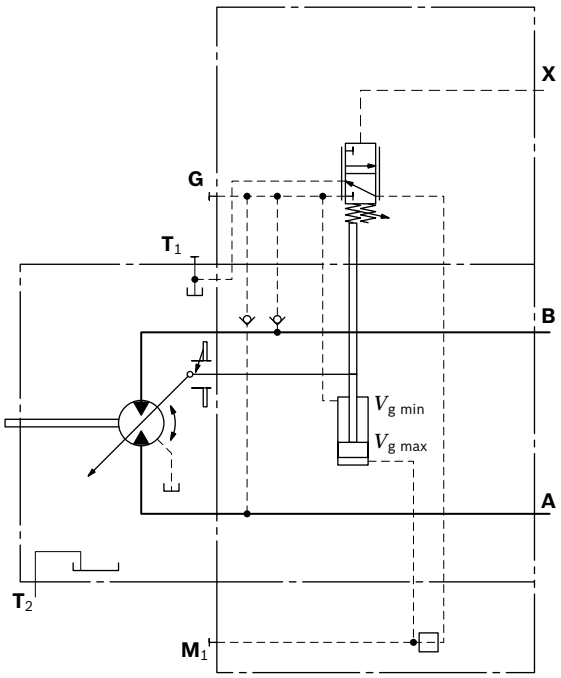

3

HP – Proportional hydraulic control

HP5D1, HP6D1 Pressure control, fixed setting

The pressure control overrides the HP control function. If the load torque or a reduction in motor swivel angle causes the system pressure to reach the setpoint value of the pressure control, the motor will swivel towards a larger angle.

The increase in displacement and the resulting reduction in pressure cause the control deviation to decrease. With the increase in displacement the motor develops more torque, while the pressure remains constant.

Setting range of the pressure control valve 80 to 400 bar

▼ **Circuit diagram HP5D1, HP6D1 (negative control)**

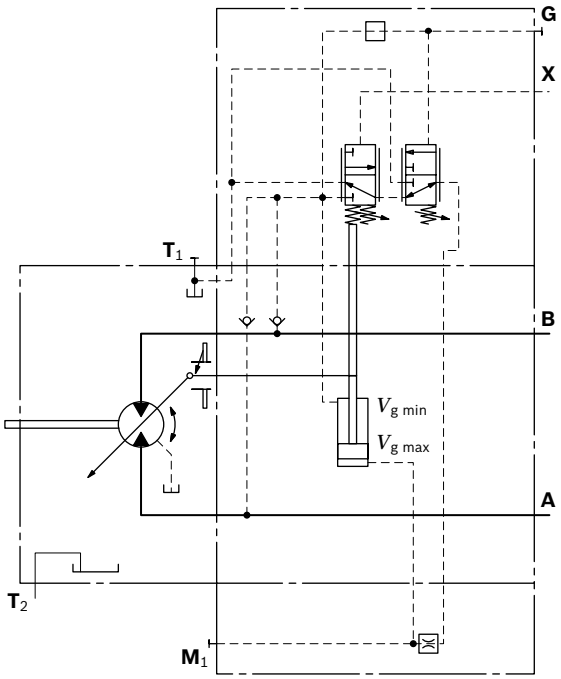

EP – Proportional control, electric

The proportional electric control provides infinite adjustment of the displacement. Control is proportional to the electric control current applied to the solenoid.

EP1, EP2 positive control

- Beginning of control at $V_{g\,min}$ (minimum torque, maximum permissible rotational speed at minimum control current)
- End of control at $V_{g\,max}$ (maximum torque, minimum rotational speed at maximum control current)

EP5, EP6 negative control

- Beginning of control at $V_{g\,max}$ (maximum torque, minimum rotational speed at minimum control current)
- End of control at $V_{g\,min}$ (minimum torque, maximum permissible rotational speed at maximum control current)

▼ **Characteristic curve**

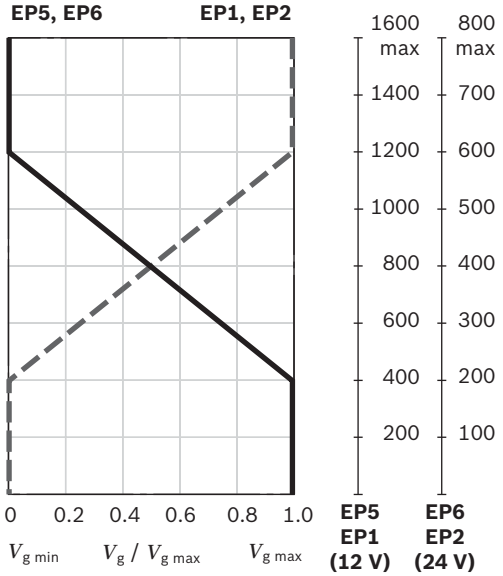

Notice

The control oil is internally taken out of the high pressure side of the motor (**A** or **B**). For reliable control, a working pressure of at least 30 bar is required in **A** (**B**). If a control operation is performed at a working pressure < 30 bar, an auxiliary pressure of at least 30 bar must be applied at port **G** using an external check valve. For lower pressures, please contact us.

Bear in mind that pressures up to 450 bar can occur at port **G**.

Response time damping

The response time damping impacts the pivot behavior of the motor and consequently the machine response speed.

Standard for sizes 55 to 200

EP without damping.

EP.D with throttle pin on both sides, symmetrical (see table)

Optional for sizes 55 to 200

EP with throttle pin on both sides, symmetrical (see table)

▼ **Throttle pin overview**

Size	55	80	107	160	200
Groove size [mm]	0.45	0.45	0.55	0.55	0.65

Technical data, solenoid	EP1, EP5	EP2, EP6
Voltage	12 V (±20%)	24 V (±20%)
Control current		
Beginning of control	400 mA	200 mA
End of control	1200 mA	600 mA
Current limit	1.54 A	0.77 A
Nominal resistance (at 20 °C)	5.5 Ω	22.7 Ω
Dither		
Frequency	100 Hz	100 Hz
Minimum oscillation range[1)]	240 mA	120 mA
Duty cycle	100%	100%
Type of protection: see connector version page 24		

Various BODAS controllers with application software and amplifiers are available for controlling the proportional solenoids.

Further information can also be found on the internet at www.boschrexroth.de/mobilelektronik.

1) Minimum required oscillation range of the control current $\Delta I_{p\text{-}p}$ (peak to peak) within the respective control range (start of control to end of control)

▼ **Circuit diagram EP1, EP2 (positive control)**

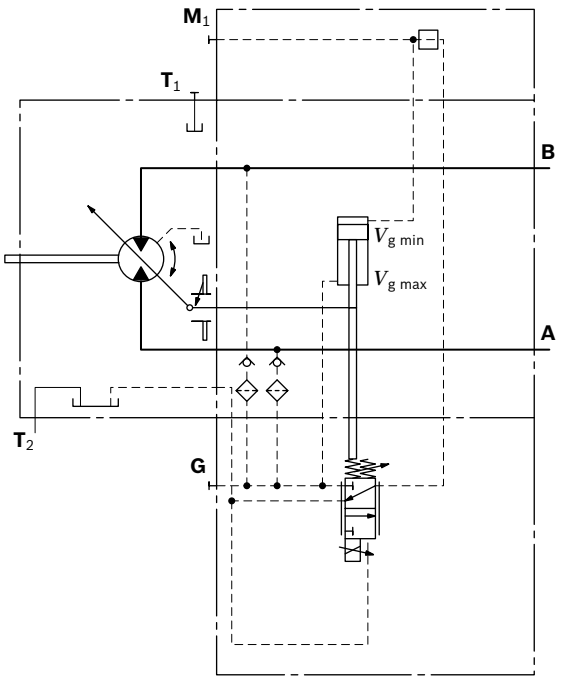

▼ **Circuit diagram EP5, EP6 (negative control)**

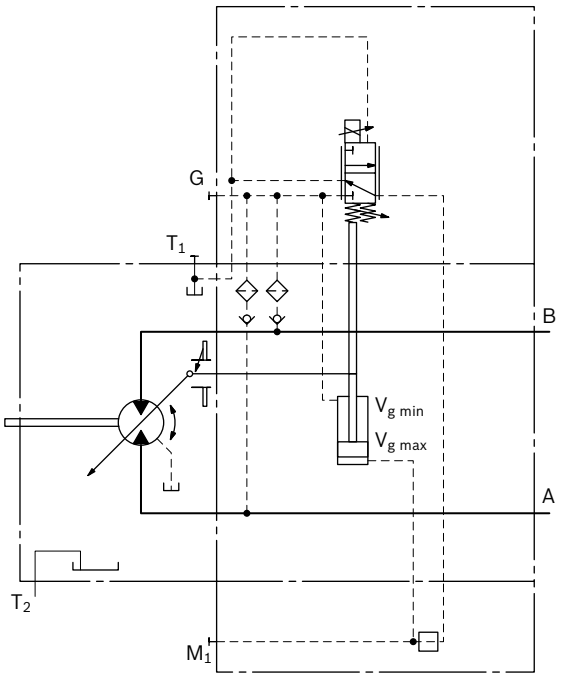

EP5D1, EP6D1 Pressure control, fixed setting

The pressure control overrides the EP control function. If the load torque or a reduction in motor swivel angle causes the system pressure to reach the setpoint value of the pressure control, the motor will swivel towards a larger angle.

The increase in displacement and the resulting reduction in pressure cause the control deviation to decrease. With the increase in displacement the motor develops more torque, while the pressure remains constant.

Setting range of the pressure control valve 80 to 400 bar

▼ **Circuit diagram EP5D1, EP6D1 (negative control)**

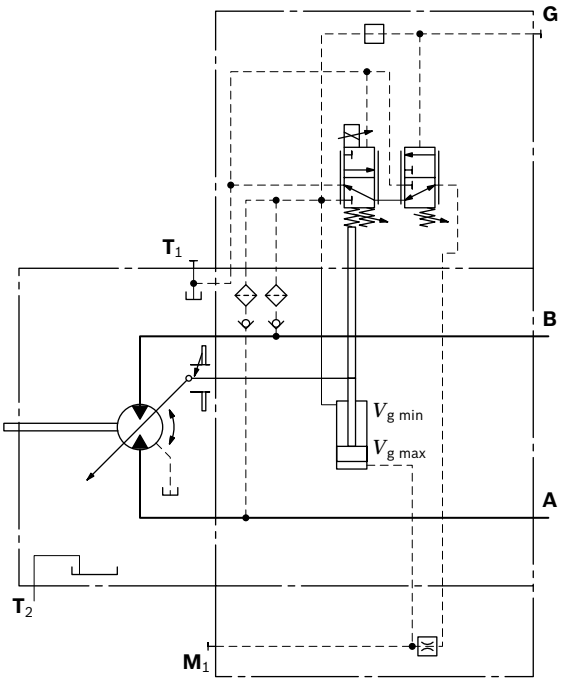

HZ – Two-point control, hydraulic

The two-point hydraulic control allows the displacement to be set to either $V_{g\,min}$ or $V_{g\,max}$ by switching the pilot pressure at port **X** on or off.

HZ5, HZ7 negative control

- Position at $V_{g\,max}$ (without pilot pressure, maximum torque, minimum rotational speed)
- Position at V_g min (with pilot pressure > 15 bar activated, minimum torque, maximum permissible rotational speed)

▼ **Characteristic curve HZ5, HZ7**

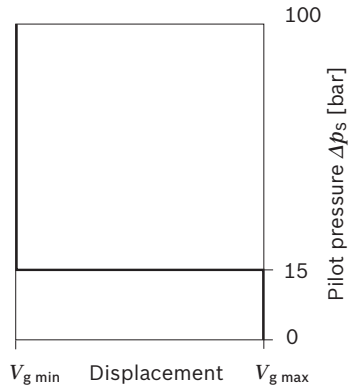

Notice

- Maximum permissible pilot pressure: 100 bar
- The control oil is internally taken out of the high pressure side of the motor (**A** or **B**). For reliable control, a working pressure of at least 30 bar required in **A** (**B**). If a control operation is performed at a working pressure < 30 bar, an auxiliary pressure of at least 30 bar must be applied at port **G** using an external check valve. For lower pressures, please contact us. Bear in mind that pressures up to 450 bar can occur at port **G**.
- A leakage flow of maximum 0.3 l/min occurs at port **X** (working pressure > pilot pressure). To avoid a build-up of pilot pressure, pressure must be relieved from port **X** to the reservoir.

Response time damping

The response time damping impacts the pivot behavior of the motor and consequently the machine response speed.

Standard for sizes 160 and 200

HZ5 with throttle pin on both sides, symmetrical (see table)

Standard for sizes 107 and 160 with BVI

HZ7 with throttle pin on both sides 0.30, symmetrical

Standard for sizes 55 to 107

HZ7 (synchronous piston) with throttle pin on both sides, symmetrical (see table)

▼ **Throttle pin overview**

Size	55	80	107	160	200
Groove size [mm]	0.30	0.30	0.30	0.55	0.65

▼ **Circuit diagram HZ5 (negative control) sizes 160 and 200**

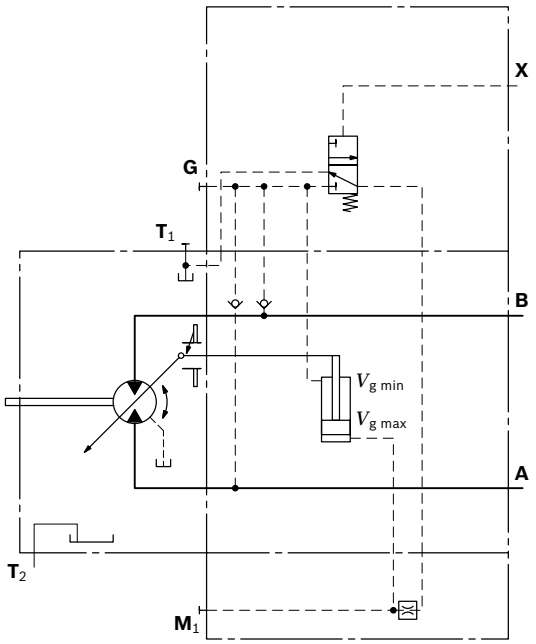

▼ **Circuit diagram HZ7 (negative control) size 55 to 107**

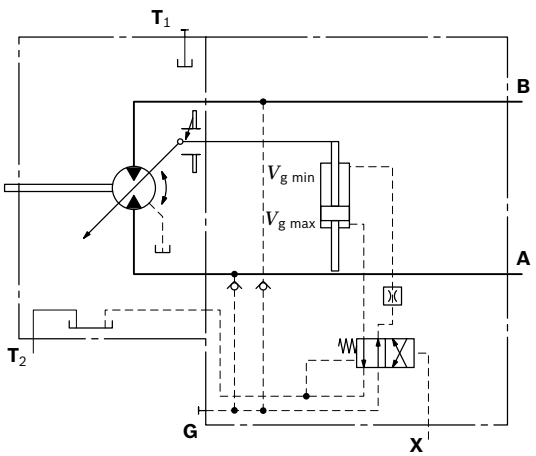

EZ – Two-point control, electric

The two-point electric control allows the displacement to be set to either $V_{g\,min}$ or $V_{g\,max}$ by switching the electric current to a switching solenoid on or off.

Notice

The control oil is internally taken out of the high pressure side of the motor (**A** or **B**). For reliable control, a working pressure of at least 30 bar is required in **A** (**B**). If a control operation is performed at a working pressure < 30 bar, an auxiliary pressure of at least 30 bar must be applied at port **G** using an external check valve. For lower pressures, please contact us.

Bear in mind that pressures up to 450 bar can occur at port **G**.

Response time damping

The response time damping impacts the pivot behavior of the motor and consequently the machine response speed.

Standard for sizes 160 and 200

EZ5, EZ6 with throttle pin on both sides, symmetrical (see table)

Standard for sizes 55 to 107

EZ7, EZ8 (synchronous piston) with throttle pin on both sides, symmetrical (see table)

▼ **Throttle pin overview**

Size	55	80	107	160	200
Groove size [mm]	0.30	0.30	0.30	0.55	0.65

Sizes 160 and 200

Technical data, solenoid with Ø37	EZ5	EZ6
Voltage	12 V (±20%)	24 V (±20%)
Position $V_{g\,max}$	de-energized	de-energized
Position $V_{g\,min}$	Current Switched on	Current Switched on
Nominal resistance (at 20 °C)	5.5 Ω	21.7 Ω
Nominal power	26.2 W	26.5 W
Minimum active current required	1.32 A	0.67 A
Duty cycle	100%	100%
Type of protection: see connector version page 24		

▼ **Circuit diagram EZ5, EZ6 (negative control)**

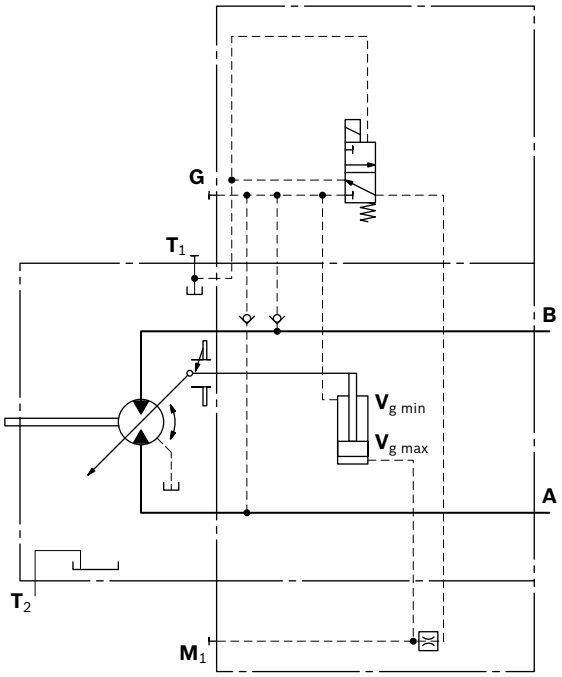

Sizes 55 to 107

Technical data, solenoid with Ø45	EZ7	EZ8
Voltage	12 V (±20%)	24 V (±20%)
Position $V_{g\,max}$	de-energized	de-energized
Position $V_{g\,min}$	energized	energized
Nominal resistance (at 20 °C)	4.8 Ω	19.2 Ω
Nominal power	30 W	30 W
Minimum active current required	1.5 A	0.75 A
Duty cycle	100%	100%
Type of protection: see connector version page 24		

▼ **Circuit diagram EZ7, EZ8 (negative control)**

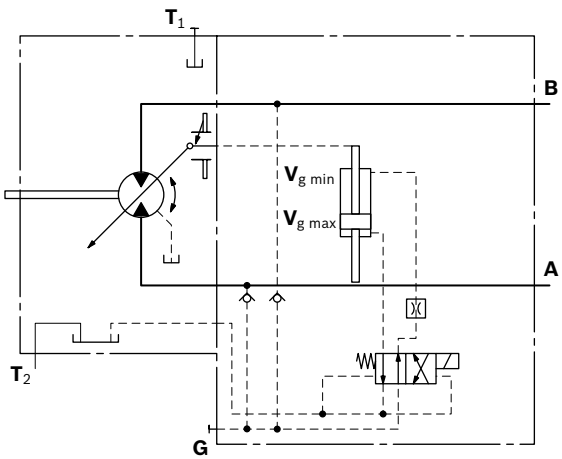

HA – Automatic high-pressure related control

The automatic high-pressure related control adjusts the displacement automatically depending on the working pressure.
The beginning of control of the A6VE motor with HA control is $V_{g\,min}$ (maximum rotational speed and minimum torque). The control device measures internally the working pressure at **A** or **B** (no control line required) and upon reaching the beginning of control, the controller swivels the motor from $V_{g\,min}$ to $V_{g\,max}$. The displacement is modulated between $V_{g\,min}$ and $V_{g\,max}$ depending on the load.

HA1, HA2, HA3 positive control

- Beginning of control at $V_{g\,min}$ (minimum torque, maximum rotational speed)
- End of control at $V_{g\,max}$ (maximum torque, minimum rotational speed)

Notice

- For safety reasons, winch drives are not permissible with beginning of control at $V_{g\,min}$ (standard for HA).
- The control oil is internally taken out of the high pressure side of the motor (**A** or **B**). For reliable control, a working pressure of at least 30 bar is required in **A** (**B**). If a control operation is performed at a working pressure < 30 bar, an auxiliary pressure of at least 30 bar must be applied at port **G** using an external check valve. For lower pressures, please contact us.
  Bear in mind that pressures up to 450 bar can occur at port **G**.
- The beginning of control and the HA.T3 characteristic curve are influenced by case pressure. An increase in the case pressure causes an increase in the beginning of control (see page 6) and thus a parallel displacement of the characteristic curve.
- A leakage flow of maximum 0.3 l/min occurs at port **X** (working pressure > pilot pressure). To avoid a build-up of pilot pressure, pressure must be relieved from port **X** to the reservoir. Only for HA.T control.

Response time damping

The response time damping impacts the pivot behavior of the motor and consequently the machine response speed.

Standard for sizes 55 to 200

HA1,2 with one-sided throttle pin, throttling occurs from $V_{g\,min}$ to $V_{g\,max}$. (see table) HA3 and HA3T3 with BVI and throttle pin on both sides, 0.30, symmetrical

▼ **Throttle pin overview**

Size	55	80	107	160	200
Groove size [mm]	0.45	0.45	0.55	0.55	0.65

Standard for sizes 55 to 200

HA with BVD or BVE counterbalance valves with throttle screw (see table)

▼ **Throttle screw**

Size	55	80	107	160	200
Diameter [mm]	0.80	0.80	0.80	0.80	0.80

HA1, HA3 with minimum pressure increase, positive control

A working pressure increase of Δp ≤ approx. 10 bar results in an increase in displacement from $V_{g\,min}$ to $V_{g\,max}$.
Beginning of control, setting range 80 to 350 bar
Specify the desired beginning of control in plain text when ordering, e.g. beginning of control at 300 bar.

▼ **Characteristic curve HA1, HA3**

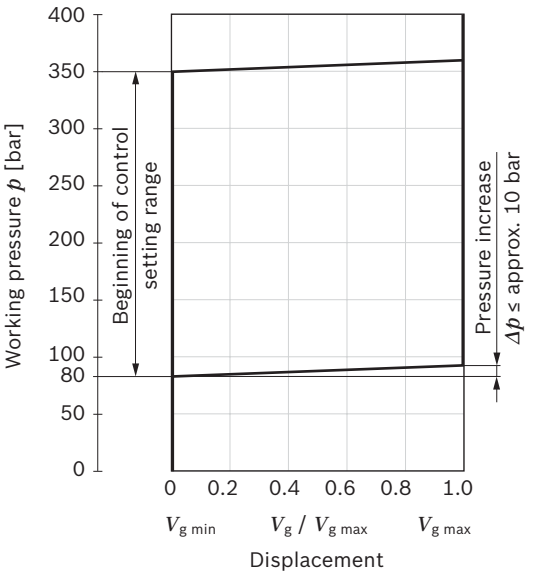

▼ **Circuit diagram HA1**

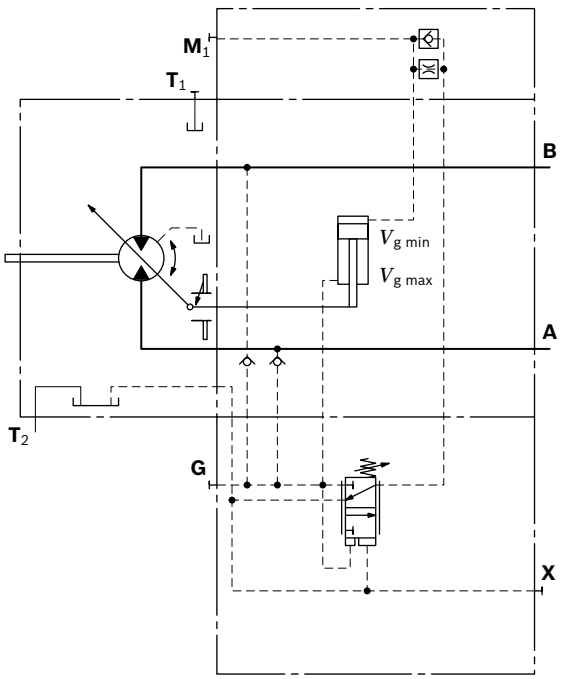

▼ **Circuit diagram HA3**

With integrated BVI counterbalance valve, see page 32

HA2 with pressure increase, positive control

A working pressure increase of Δp ≤ approx. 100 bar results in an increase in displacement from $V_{g\,min}$ to $V_{g\,max}$.
Beginning of control, setting range 80 to 350 bar
Specify the desired beginning of control in plain text when ordering, e.g. beginning of control at 200 bar.

▼ **Characteristic curve HA2**

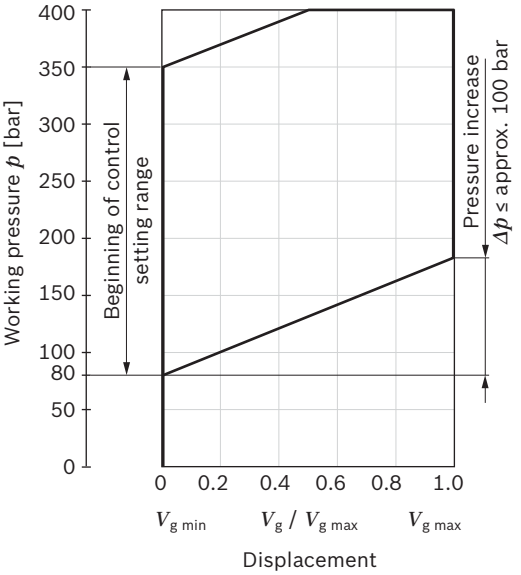

▼ **Circuit diagram HA2**

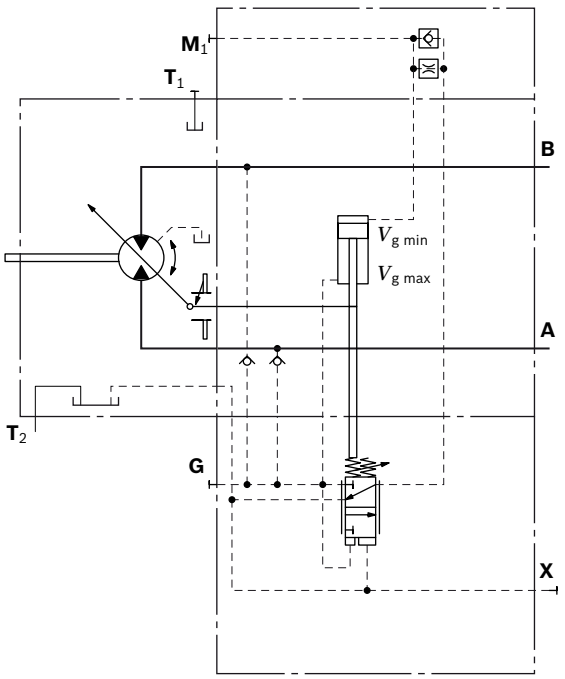

HA.T3 override, hydraulic, remote controlled, proportional

With the HA.T3 control, the beginning of control can be influenced by applying a pilot pressure to port **X**.
For each 1 bar of pilot pressure increase, the beginning of control is reduced by 17 bar.

Beginning of control setting	300 bar	300 bar
Pilot pressure at port **X**	0 bar	10 bar
Beginning of control at	300 bar	130 bar

Notice

Maximum permissible pilot pressure 100 bar.

▼ **Circuit diagram HA1T3**

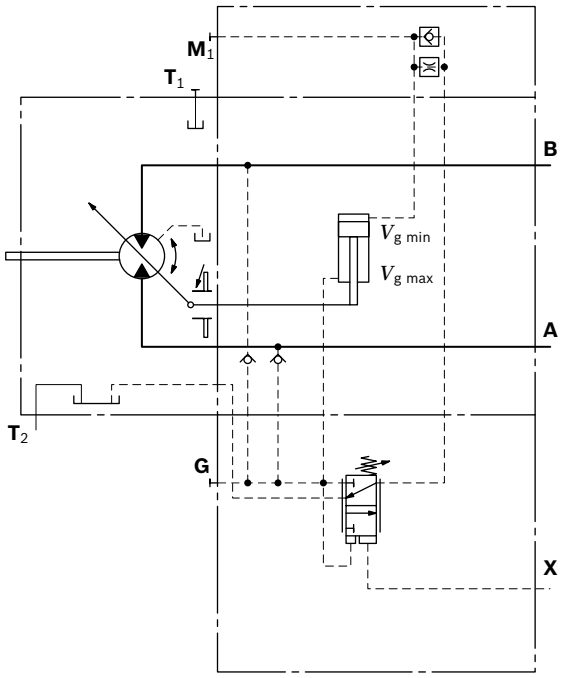

▼ **Circuit diagram HA2T3**

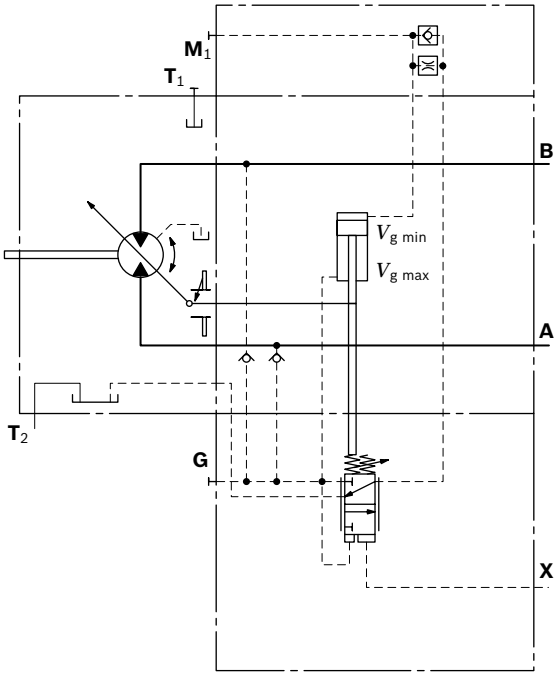

▼ **Circuit diagram HA3T3**

With integrated BVI counterbalance valve, see page 32

Dimensions

Sizes 55 to 160

HZ7 – Two-point control, hydraulic

Port plate 2 — SAE working ports **A** and **B** lateral, opposing

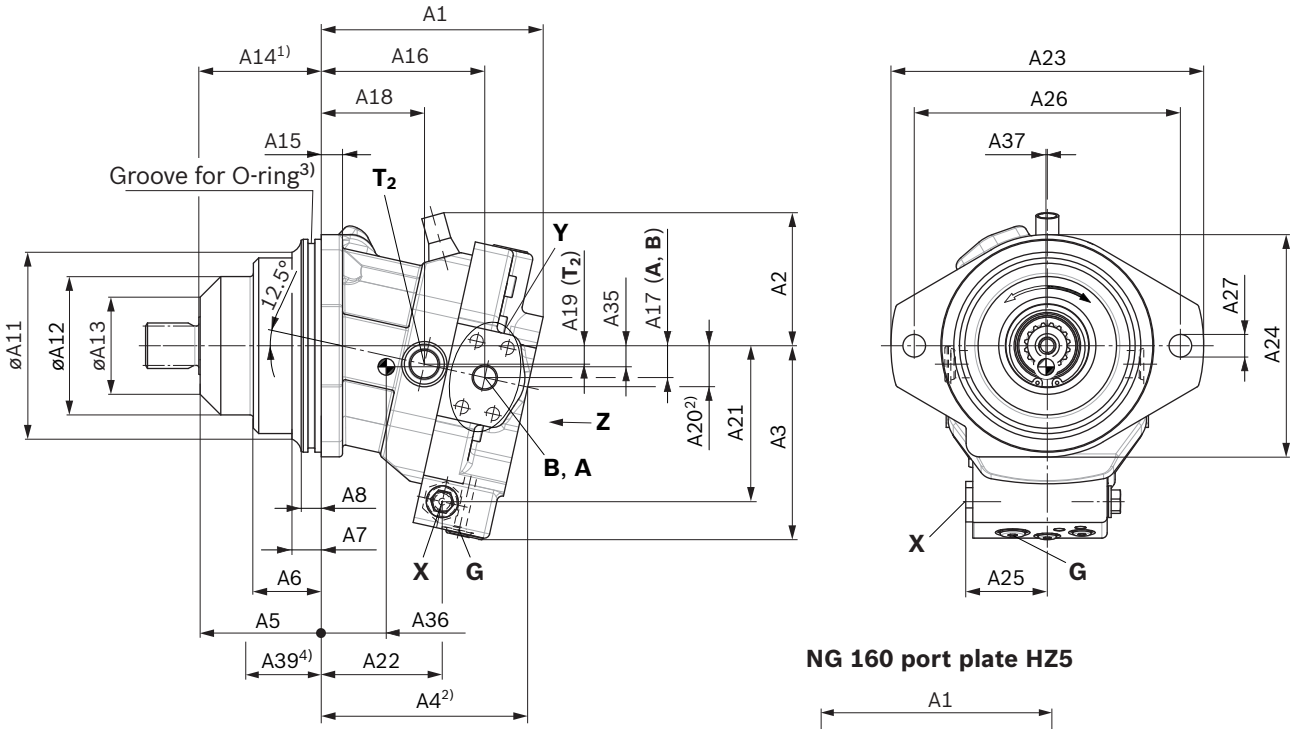

NG 160 port plate HZ5

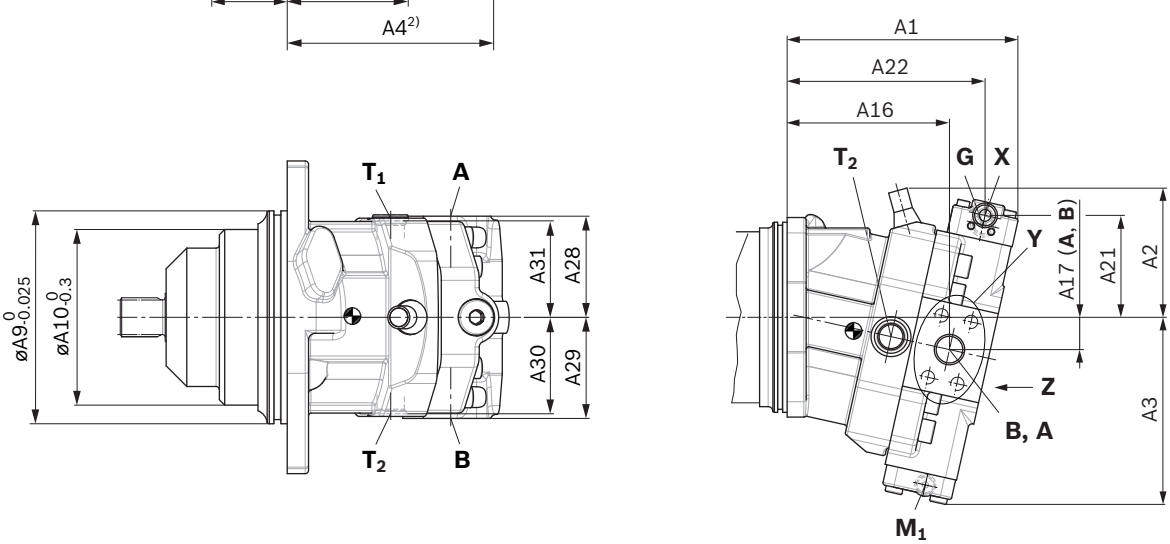

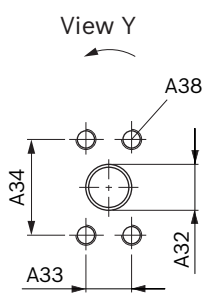

Center of gravity

1) To shaft collar
2) Port plate 1 — SAE working ports **A** and **B** at rear
3) The O-ring is not included in the scope of delivery
4) Difference in dimension of mounting flange A6VM to A6VE

Notice

Dimensions of the control devices, see data sheet RD 91610.

NG	A1	A2	A3	A4	A5	A6	A7	A8	øA9	øA10	øA11	øA12	øA13	A14	A15	A16
55	167	100	146	153	91	51	22	15	160	132	140.5	104	73	92	16	123
80	176	114	161	164	109.5	65	30	15	190	143	151	116	88	110.5	18	129
107	187	121	172	175	121.8	73	35	15	200	160	168	132	90	122.8	18	137
160	243	133	197	212	122	67	29	15	200	180	188	146	100	123	20	171

NG	A17	A18	A19	A20	A21	A22	A23	A24	A25	A26	A27	A28	A29	A30	A31	A32
55	24	77	14	30	117	91	235	166	57	200	17	76	76	73	73	19
80	28	78	16	35	132	93	260	198	57	224	21	82	82	78.5	78.5	25
107	30	82	17	38	143	99	286	210	61	250	21	90	90	86.5	86.5	25
160	34	109	20	43	107	208	286	210	40.5	250	21	102	102	98.5	98.5	32

NG	A33	A34	A35	A36	A37	A38	A39	O-ring
55	23.8	50.8	15.8	48.8	1	M10 x 1.5; 17 deep	60	150 × 4
80	27.8	57.2	15.9	44.2	0.6	M12 × 1.75; 17 deep	78.5	182 × 4
107	27.8	57.2	15.2	42.9	0.5	M12 × 1.75; 17 deep	83	192 × 4
160	31.8	66.7	14.3	69.9	0.5	M14 x 2; 19 deep	83	192 × 4

▼ **Drive shaft**

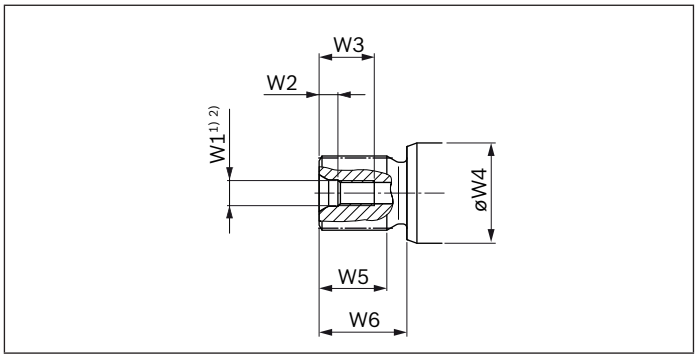

NG	Splined shaft DIN 5480	W1	W2	W3	øW4	W5	W6
55	**Z6 –** W30×2×14×9g	M12×1.75	9.5	28	45	27	35
55	**Z8 –** W35×2×16×9g	M12×1.75	9.5	28	45	32	40
80	**Z8 –** W35×2×16×9g	M12×1.75	9.5	28	50	32	40
80	**Z9 –** W40×2×18×9g	M16×2	12	36	50	37	45
107	**Z9 –** W40×2×18×9g	M12×1.75	9.5	28	60	37	45
107	**A1 –** W45×2×21×9g	M16×2	12	36	60	42	50
160	**A1 –** W45×2×21×9g	M16×2	12	36	70	42	50
160	**A2 –** W50×2×24×9g	M16×2	12	36	70	44	55
200	**A2 –** W50×2×24×9g	M16×2	12	36	70	44	55

1) For notes on tightening torques, see the instruction manual.
2) Center bore according to DIN 332 (thread according to DIN 13)

Dimensions

Sizes 200

HZ5 – Two-point control, hydraulic

Port plate 2 — SAE working ports **A** and **B** lateral, opposing

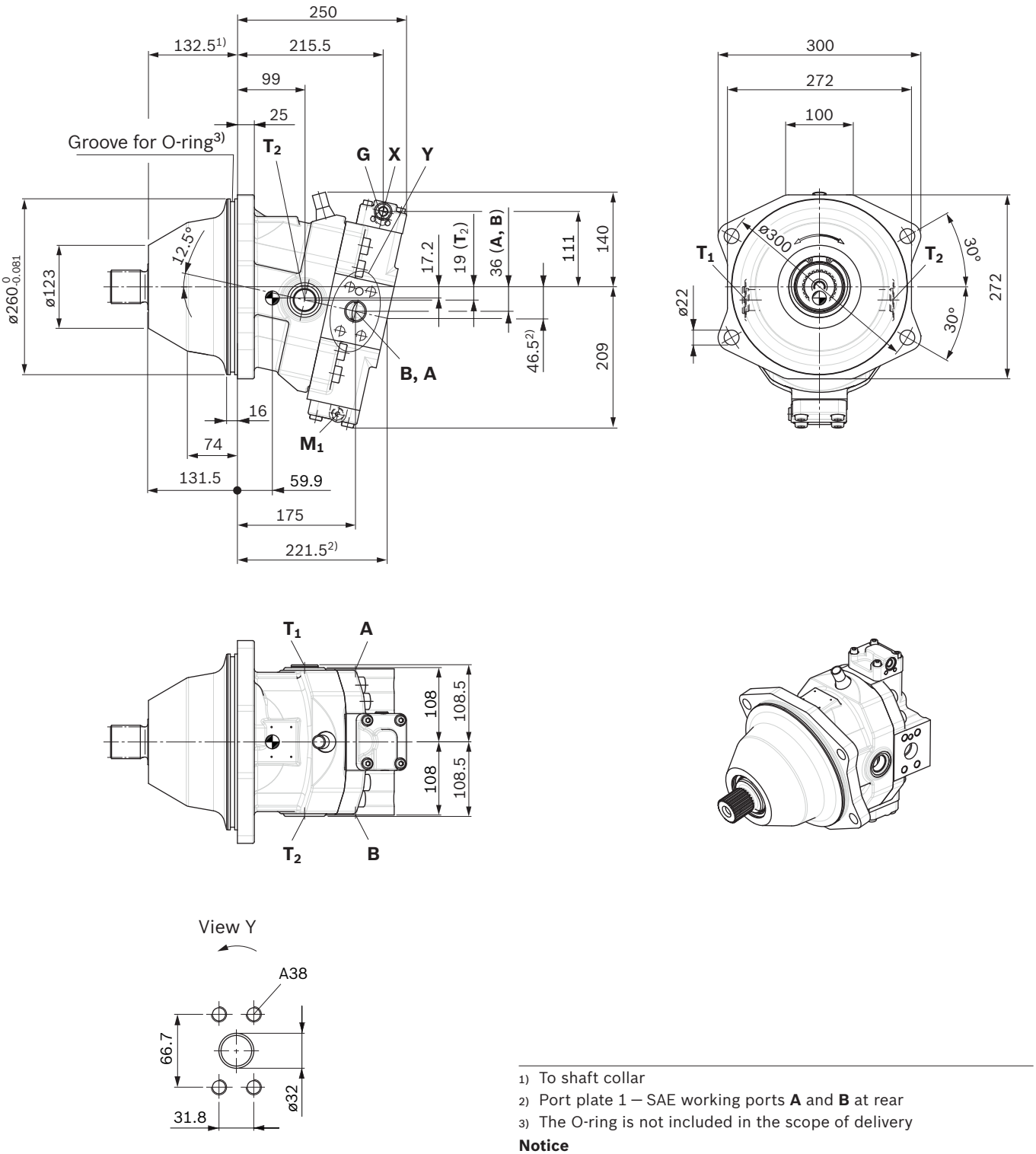

Center of gravity

1) To shaft collar
2) Port plate 1 — SAE working ports **A** and **B** at rear
3) The O-ring is not included in the scope of delivery

Notice

Dimensions of the control devices, see data sheet 91610.

▼ **Location of the working ports on the port plates** (view **Z**)

2 SAE working ports **A** and **B** lateral, opposite

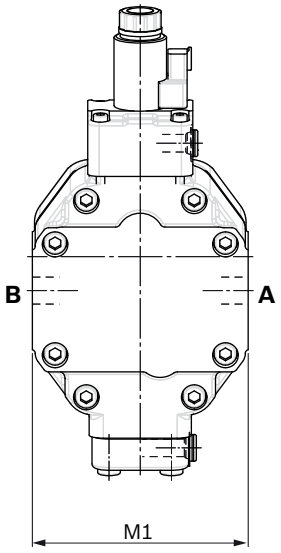

1 SAE working ports **A** and **B** at rear

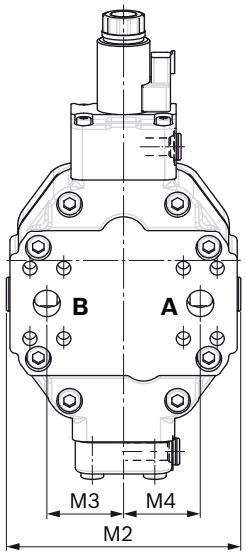

2 SAE working ports **A** and **B** lateral, opposite, only HZ7, EZ7/8 (NG55 to 107)

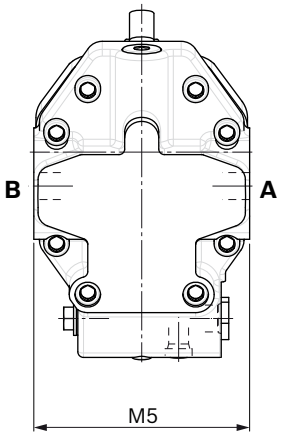

1 SAE working ports **A** and **B** at rear, only HZ7, EZ7/8 (NG55 to 107)

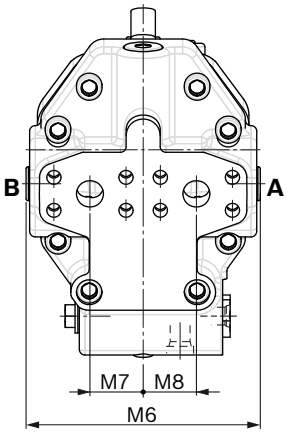

NG	M1	M2	M3	M4	M5	M6	M7	M8
55	152	165	54	54	152	165	37.5	37.5
80	164	177	54	54	164	177	42	42
107	180	193	65	65	180	193	42	42
160	204	226	76	76	–	–	–	–
200	216	235	82	82	–	–	–	–

NG	Ports A, B		T_1, T_2	G	**X** (HA1, HA2)	**X** (HP, HZ, HA1T/2T)	M_1	
55	3/4 in	M10 x 1.5; 17 deep	M22 × 1.5; 15.5 deep	M14 x 1.5; 11.5 deep	M14 x 1.5; 11.5 deep	M14 x 1.5; 11.5 deep		–
80	1 in	M12 × 1.75; 17 deep	M22 × 1.5; 15.5 deep	M14 x 1.5; 11.5 deep	M14 x 1.5; 11.5 deep	M14 x 1.5; 11.5 deep		–
107	1 in	M12 × 1.75; 17 deep	M22 × 1.5; 15.5 deep	M14 x 1.5; 11.5 deep	M14 x 1.5; 11.5 deep	M14 x 1.5; 11.5 deep		–
160	1 1/4 in	M14 x 2; 19 deep	M27 x 2; 19 deep	M14 x 1.5; 11.5 deep	M14 x 1.5; 11.5 deep	M14 x 1.5; 11.5 deep	M14 × 1.5; 11.5 deep	
200	1 1/4 in	M14 x 2; 19 deep	M33 × 2; 19 deep	M14 x 1.5; 11.5 deep	M14 x 1.5; 11.5 deep	M14 x 1.5; 11.5 deep	M14 x 1.5; 11.5 deep	

Ports		Standard	p_{max} [bar][1]	State[5]
A, B	Working port fastening thread	SAE J518 DIN 13[2]	450	O
T_1, T_2	Drain port	ISO 6149[4]	3	X/O (T_2)[3]
G	Synchronous control	ISO 6149[4]	450	X
X (HA1, HA2)	Pilot signal	ISO 6149[4]	3	X
X (HP, HZ, HA1T/2T)	Pilot signal	ISO 6149[4]	100	O
M_1	Stroking chamber measurement	ISO 6149[4]	450	X

1) Depending on the application, momentary pressure peaks can occur. Keep this in mind when selecting measuring devices and fittings.
2) Only dimensions according to SAE J518, metric fastening thread is a deviation from the standard
3) Depending on installation position, T_1 or T_2 must be connected (see also installation instructions on page 38).
4) The countersink can be deeper than as specified in the standard.
5) O = Must be connected (plugged when delivered)
X = Plugged (in normal operation)

Connector for solenoids

DEUTSCH DT04-2P-EP04

Molded connector, 2-pin, without bidirectional suppressor diode

The following type of protection results with the installed mating connector:

- IP67 (DIN/EN 60529) and
- IP69K (DIN 40050-9)

▼ **Circuit symbol**

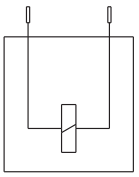

▼ **Mating connector DEUTSCH DT06-2S-EP04**

Consisting of	DT designation
1 housing	DT06-2S-EP04
1 wedge	W2S
2 sockets	0462-201-16141

The mating connector is not included in the scope of delivery. This can be supplied by Bosch Rexroth on request (material number R902601804).

Notice

- If necessary, you can change the position of the connector by turning the solenoid.
- The procedure is defined in the instruction manual.

Flushing and boost-pressure valve

The flushing and boost-pressure valve is used to remove heat from the hydraulic circuit.
In a closed circuit, it is used for flushing the case and safeguarding the minimum boost pressure.
Hydraulic fluid is directed from the respective low pressure side into the motor housing. This is then fed into the reservoir, together with the leakage. In the closed circuit, the removed hydraulic fluid must be replaced by cooled hydraulic fluid supplied by the boost pump.
The valve is mounted on the port plate or integrated (depending on the control type and size).

Cracking pressure of pressure retaining valve
(observe when setting the primary valve)

- Size 55 to 200, fixed setting 16 bar

Switching pressure of flushing spool Δp

- Size 55 to 107 (small flushing valve) 8 ± 1 bar
- Size 107 to 200 (medium and large flushing valve) 17.5 ± 1.5 bar

Flushing flow q_v
Orifices can be used to adjust the flushing flows as required. The following parameters are based on:
$\Delta p_{ND} = p_{ND} - p_G$ = 25 bar and ν = 10 mm²/s
(p_{ND} = low pressure, p_G = case pressure)

Small flushing valve for sizes 55 to 107

Material number of orifice	ø [mm]	q_v [l/min]	Code
R909651766	1.2	3.5	A
R909419695	1.4	5	B
R909419696	1.8	8	C
R909419697	2.0	10	D
R909444361	2.4	14	F

Medium flushing valve for size 107

Material number of orifice	ø [mm]	q_v [l/min]	Code
R909431310	2.8	18	I
R902138235	3.1	21	J
R909435172	3.5	27	K
R909449967	5.0	31	L

Large flushing valve for sizes 160 and 200

Material number of orifice	ø [mm]	q_v [l/min]	Code
R909449998	1.8	8	C
R909431308	2.0	10	D
R909431309	2.5	15	G
R909431310	2.8	18	I
R902138235	3.1	21	J
R909435172	3.5	27	K
R909436622	4.0	31	L
R909449967	5.0	37	M

▼ **Circuit diagram EP**

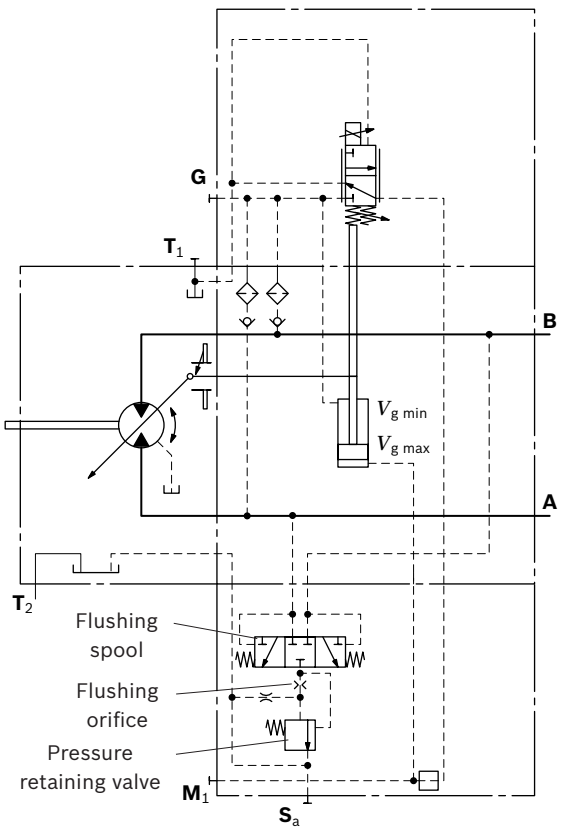

Notice

- Port **S_a** only for sizes 160 and 200
- For a flushing flow of 35 l/min, it is recommended that port **S_a** be connected in order to prevent an increase in case pressure. An increased case pressure reduces the flushing flow.

▼ **Dimensions of sizes 55 to 107 (small flushing valve)**

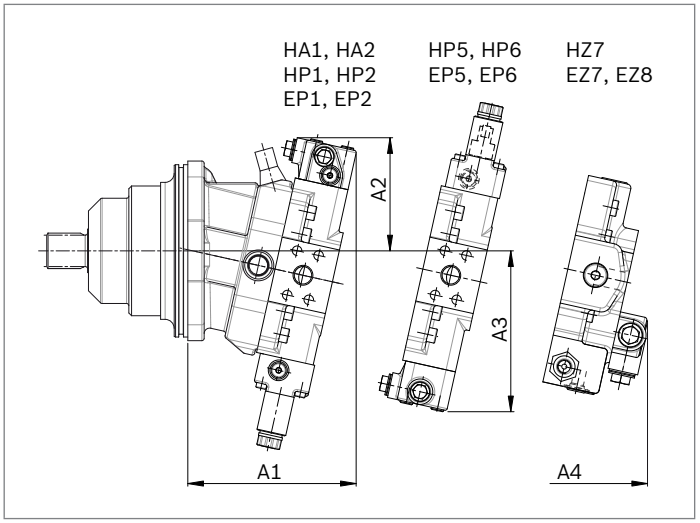

NG	A1	A2	A3	A4
55	183	137	183	176
80	195	142	194	176
107	204	143	202	186

▼ **Dimensions of size 107 (medium flushing valve)**

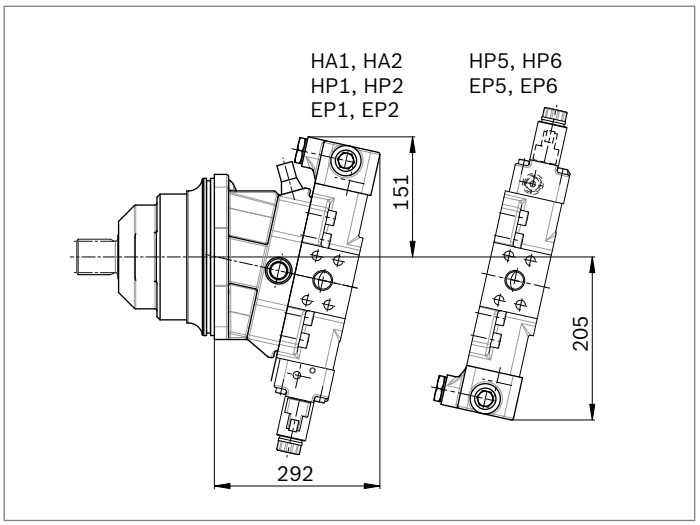

▼ **Dimensions of sizes 160 and 200 (large flushing valve)**

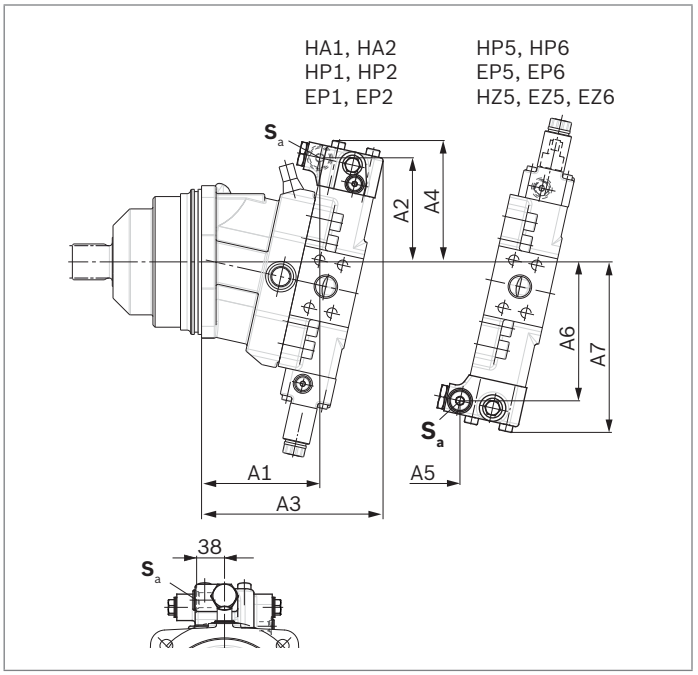

NG	A1	A2	A3	A4	A5	A6	A7	S_a[1)]
160	163	142	249	165	89	190	233	M22 × 1.5; 15.5 deep
200	170	148	256	172	93	201	244	M22 × 1.5; 15.5 deep

1) ISO 6149, ports plugged (in normal operation). For notes on tightening torques, see instruction manual.
The countersink can be deeper than as specified in the standard.

BVD and BVE counterbalance valves

Function

Counterbalance valves for travel drives and winches should reduce the danger of overspeed and cavitation in open circuits of axial piston motors. Cavitation occurs if, during braking, when going downhill or during the load-lowering process, the motor speed is greater than it should be for the given inlet flow and thus the supply pressure collapses. If the supply pressure falls below the value specified for the relevant counterbalance valve, the counterbalance spool moves into the closed position. The cross-sectional area of the counterbalance valve return duct is then reduced, creating a bottleneck in the return flow of the hydraulic fluid. The pressure increases and brakes the motor until the rotational speed of the motor reaches the specified value for the given inlet flow.

Notice

- BVD available for sizes 55 to 200 and BVE available for sizes 107 to 200.
- The counterbalance valve must be ordered additionally. We recommend ordering the counterbalance valve and the motor as a set.
  Order example: A6VE080HA1T30004A/65MWV0Y2Z 97W0-0 + BVD20F27S/41B–V03K16D0400S12
- For safety reasons, controls with beginning of control at $V_{g\ min}$ (e.g. HA) are not permissible for winch drives!
- Counterbalance valves must be optimized during prototype commissioning to prevent unacceptable operating conditions and compliance with the specification must be verified.
- The counterbalance valve does not replace the mechanical service brake and holding brake.
- Observe the detailed notes on the BVD counterbalance valve in RE 95522 and BVE counterbalance valve in RE 95525.
- For the design of the brake release valve, we require the following data for the mechanical holding brake:
  - the cracking pressure
  - the volume of the counterbalance spool between minimum stroke (brake closed) and maximum stroke (brake released with 21 bar)
  - the required closing time for a warm device (oil viscosity approx. 15 mm²/s)

Permissible inlet flow or pressure when using pressure relief valve and BVD/BVE

Motor	Without valve		Limited values when using pressure relief valve and BVD/BVE							
			DBV[1]				BVD[2]/BVE[3]			
NG	p_{nom}/p_{max} [bar]	$q_{V\ max}$ [l/min]	NG	p_{nom}/p_{max} [bar]	q_V [l/min]	Code	NG	p_{nom}/p_{max} [bar]	q_V [l/min]	Code
55	400 /450	276	22	350 /420	240	7	20(BVD)	350 /420	220	7W
80		332								
107		410	32		400					
107		410				8	25 (BVD/ BVE)		320	8W
160		533								
200		628	On request							

Mounting of the counterbalance valve

When delivered, the counterbalance valve is fastened to the motor with two tacking screws (transport lock). The tacking screws may not be removed while mounting the working lines! If the counterbalance valve and motor are delivered separately, the counterbalance valve must first be fastened to the motor port plate using the provided tacking screws.

The counterbalance valve is finally mounted to the motor by fitting the SAE flange
The screws to be used and the instructions for mounting can be found in the instruction manual.

1) Pressure relief valve
2) Counterbalance valve, dual action
3) Counterbalance valve, single action

Counterbalance valve for travel drive BVD...F

Application option

- Travel drives for wheeled excavators (BVD and BVE)

▼ **Example circuit diagram for travel drive on wheeled excavators**

A6VE080HA1T30004A/65MWV0Y2Z97W0-0 + BVD20F27S/41B–V03K16D0400S12

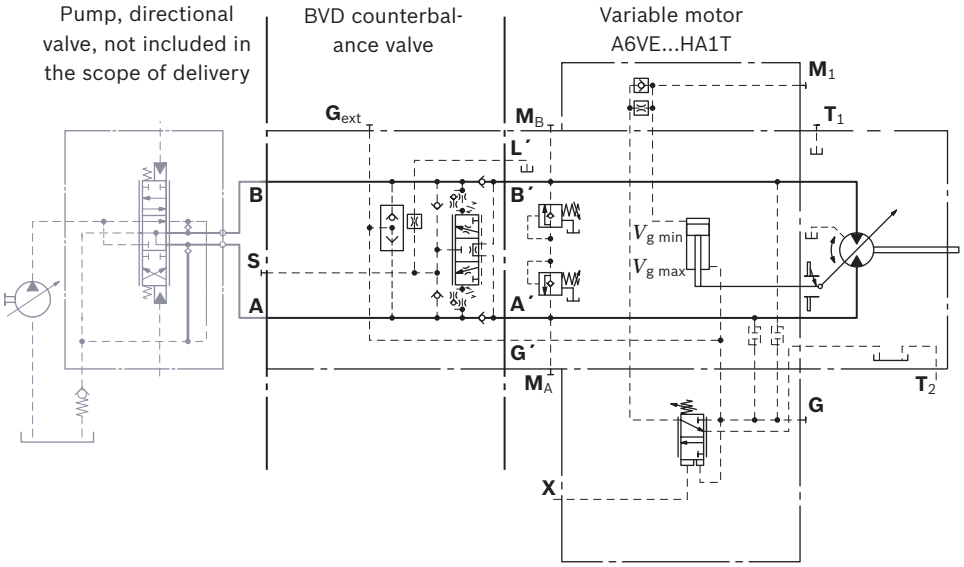

Counterbalance valve for winches and track drives BVD...W and BVE

Application option

- Winch drives for cranes (BVD and BVE)
- Track drives for tracked excavators (BVD)

▼ **Example circuit diagram for winch drive in cranes**

A6VE080HP5D10001A/65MWV0Y2Z97W0-0 + BVE25W38S/51ND-V100K00D4599T30S00-0

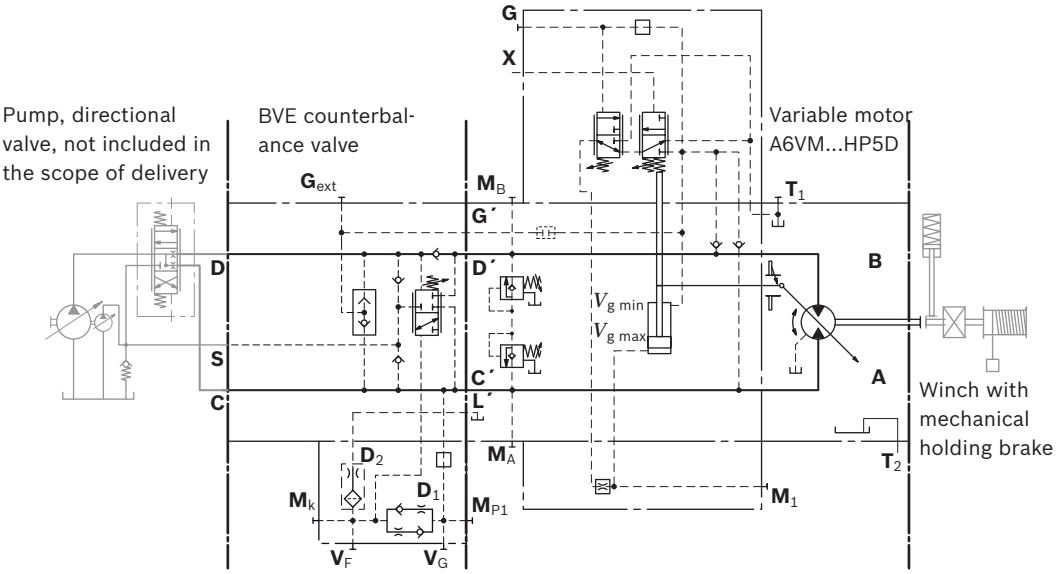

Counterbalance valve dimensions

▼ **A6VE...HA, HP1, HP2 and EP1, EP2**

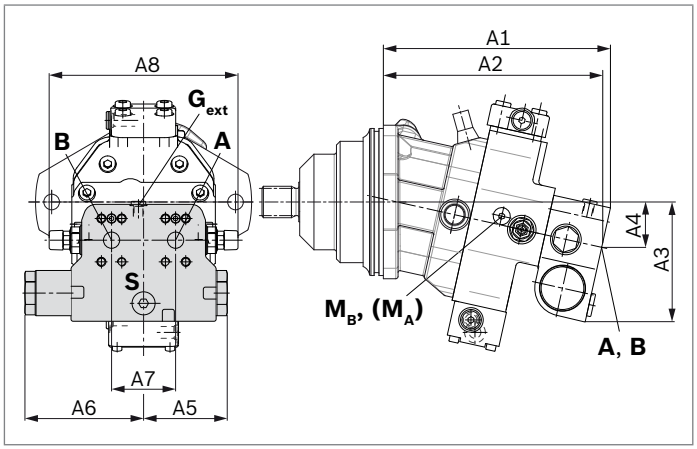

▼ **A6VE...HP5, HP6 and EP5, EP6**[1)]

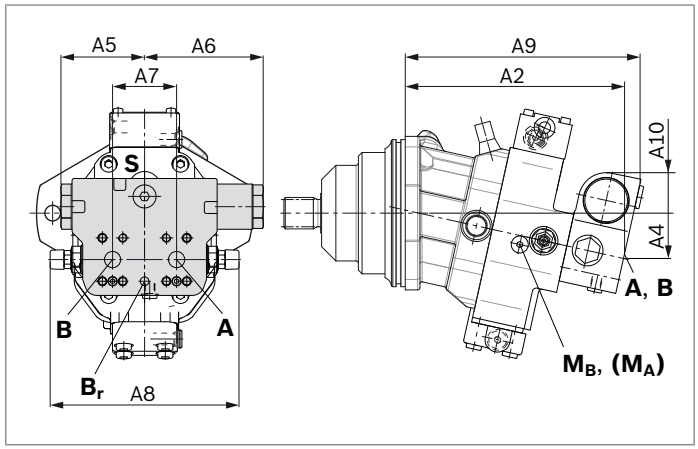

A6VE	Counterbalance valve											
NG...plate	Type	Ports	Dimensions									
		A, B	A1	A2	A3	A4	A5	A6	A7	A8	A9	A10
55...7	BVD20...17	3/4 in	252	243	143	50	98	139	75	222	267	50
80...7	BVD20...27	1 in	261	252	148	55	98	139	75	222	276	46
107...7	BVD20...28	1 in	280	271	152	59	98	139	84	234	295	41
107...8	BVD25...38	1 1/4 in	298	288	165	63	120.5	175	84	238	311	56
160...8	BVD25...38	1 1/4 in	334	324	170	68	120.5	175	84	238	349	51
107...8	BVE25...38	1 1/4 in	298	288	171	63	137	214	84	238	315	63
160...8	BVE25...38	1 1/4 in	334	325	176	68	137	214	84	238	349	59
200...8	BVD25...38	1 1/4 in	356	346	176	74	120.5	175	84	299	370	46
200...8	BVE25...38	1 1/4 in	356	346	182	74	137	214	84	299	370	52

Ports		Version	A6VM plate	Standard	Size	P_{max} [bar][2)]	State[4)]
A, **B**	Working line			SAE J518	see table above	420	O
S	Infeed	BVD20		DIN 3852[3)]	M22 × 1.5; 14 deep	30	X
		BVD25, BVE25		DIN 3852[3)]	M27 x 2; 16 deep	30	X
Br	Brake release, reduced high pressure	L	7	DIN 3852[3)]	M12 × 1.5; 12.5 deep	30	O
			8	DIN 3852[3)]	M12 × 1.5; 12 deep	30	O
G_{ext}	Brake release, high pressure	S		DIN 3852[3)]	M12 × 1.5; 12.5 deep	420	X
M_A, M_B	Pressure measurement A and B			ISO 6149[3)]	M18 x 1.5; 14.5 deep	420	X

1) At the mounting version for the controls HP5, HP6 and EP5, EP6, the cast-in port designation **A** and **B** on the BVD/BVE counterbalance valve do not correspond with the connection designation of the A6VE motor.
The designation of the ports on the installation drawing of the motor is binding!

2) Depending on the application, momentary pressure peaks can occur. Keep this in mind when selecting measuring devices and fittings.

3) The countersink can be deeper than as specified in the standard.

4) O = Must be connected (plugged on delivery)
X = Plugged (in normal operation)

Integrated BVI counterbalance valve

Function

The integrated counterbalance valves for track drives in excavator crawlers should reduce the danger of overspeed and cavitation of axial piston motors in open circuits. Cavitation occurs if, during braking or driving downhill, the rotational speed of the motor is greater than it should be for the given inlet flow, causing the supply pressure to fall sharply.

If the supply pressure falls below the value specified for the relevant counterbalance valve, the counterbalance spool moves into the closed position. The cross-sectional area of the counterbalance valve return duct is then reduced, creating a bottleneck in the return flow of the hydraulic fluid. The pressure increases and brakes the motor until the rotational speed of the motor reaches the specified value for the given inlet flow.

Notice

- BVI available for sizes 107 and 160.
- The counterbalance valve must be ordered additionally. Order example: A6VE107HA3T30004A/65MWV0S2Z 96Y0-0 + BVI510008001-0
- Counterbalance valves must be optimized during prototype commissioning to prevent unacceptable operating conditions and compliance with the specification must be verified.
- The counterbalance valve does not replace the mechanical service brake and holding brake.
- For the design of the brake release valve, we require the following data for the mechanical holding brake:
  - the cracking pressure
  - the volume of the counterbalance spool between minimum stroke (brake closed) and maximum stroke (brake released with 21 bar)
  - the required closing time for a warm device (oil viscosity approx. 15 mm^2/s)

Type code

01	02	03	04	05		06
BVI					**–**	

Counterbalance valve

01	Counterbalance valve integrated	**BVI**

Brake piston version		q_v **[l/min]**	**Material number**	
02	Volume preselection	≤ 150	R902038832	**51**
		= 150 – 210	R902038936	**52**
		= 210 – 270	R902038833	**53**
		= 270 – 330	R902038834	**54**
		= 330 – 400	R902038835	**55**
		≥ 400	R902038836	**56**

Throttle mounting

03	Constant throttle	R909432302	**0008**
	Throttle pin	R909651165	**0603**

Check valve

04	Without residual opening	**00**

Brake release valve

05	With brake release valve (standard HZ)	without disable function	**1**
	With brake release valve (standard HA)	with disable function	**2**

Standard / special version

06	Standard version	**0**
	Special version	**S**

Technical data

Working pressure	Nominal pressure	p	350 bar
	Maximum pressure	p	420 bar
Volume flow, maximum		$q_{v\,max}$	400 l/min
Counterbalance spool	Start of opening	p	12 bar
	Fully open	p	26 bar
Pressure reducing valve for brake release (fixed setting)	Control pressure	p	21^{+4} bar
	Beginning of control	p	10^{+4} bar

Permissible inlet flow or pressure when using pressure relief valve and BVI

Motor NG	No restriction Standard plate (1 + 2)		Limited values Plate with integrated counterbalance valve (6)	
				BVI + DBV
	p_{nom}/p_{max} [bar]	$q_{V\,max}$ [l/min]	p_{nom}/p_{max} [bar]	q_V [l/min]
107	400 /450	410	350 /420	240
160		533		400

▼ **Infeed characteristic curve M22 × 1.5**

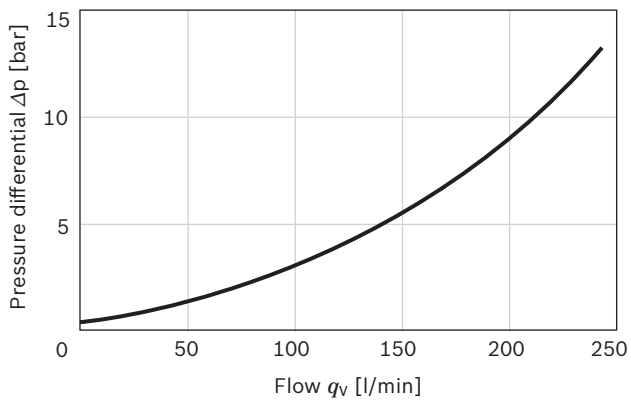

▼ **Infeed characteristic curve M27 × 2**

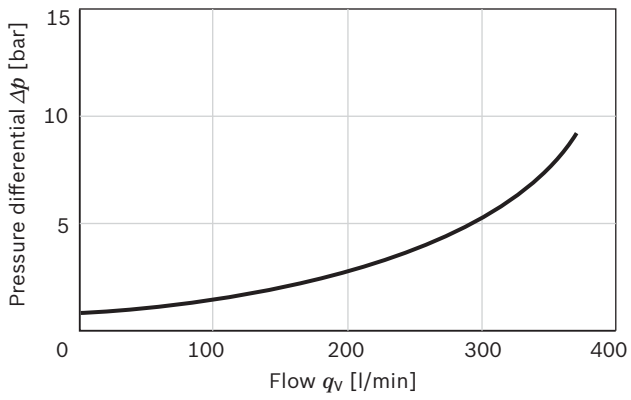

▼ **Circuit diagram HZ7**

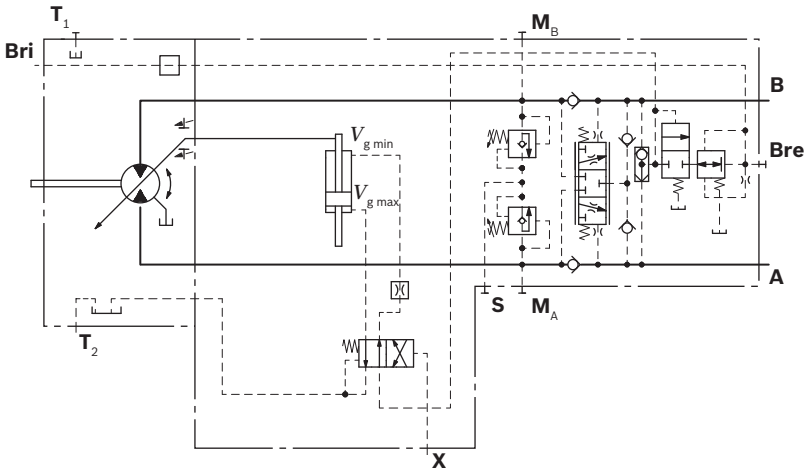

▼ **Circuit diagram HA3**

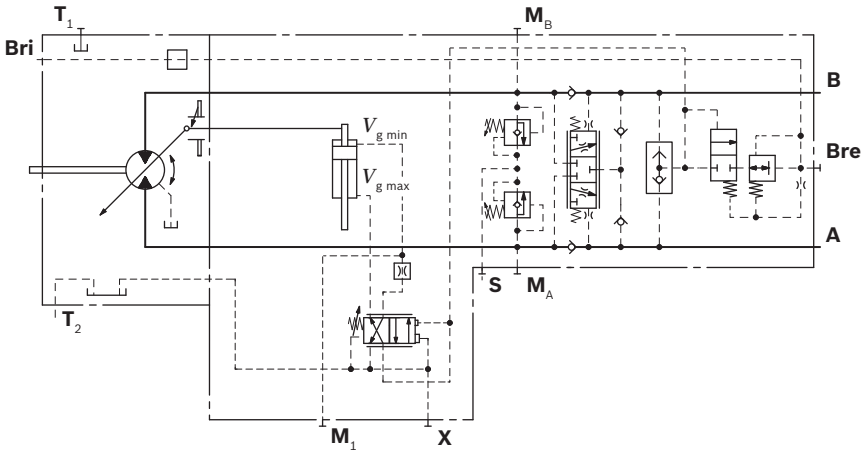

▼ **Circuit diagram HA3T3**

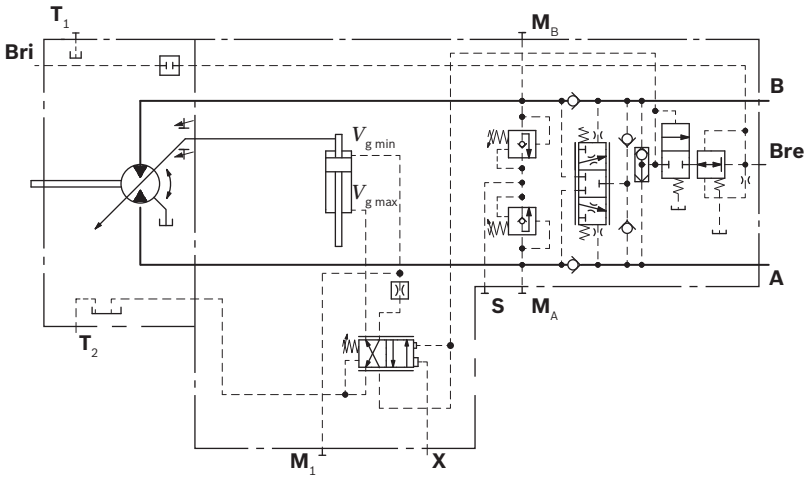

Integrated BVI counterbalance valve dimensions

HZ7 – Two-point control, hydraulic

Port plate 6, with integrated BVI counterbalance valve — SAE working ports **A** and **B** at bottom

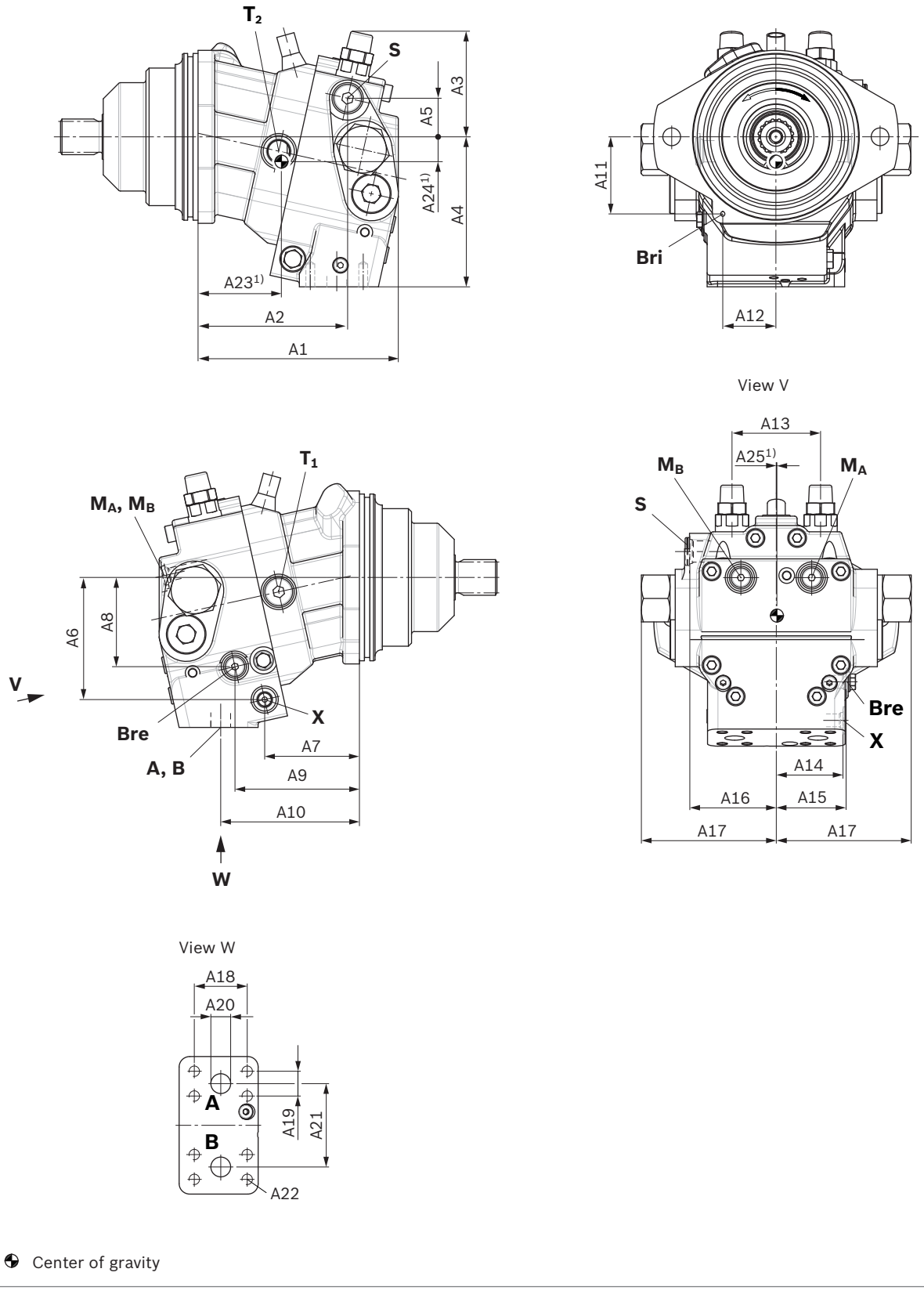

Center of gravity

A6VE NG...plate	Port	Dimensions												
	A, B[1]	A1	A2	A3	A4	A5	A6	A7	A8	A9	A10	A11	A12	A13
107...6	1 in	204	161	122	172	40	143	99	98	131	144	96	58	96
160...6	1 1/4 in	240	195	136	197	47	162	128	113	161	177	94	65	108

A6VE NG...plate	Port	Dimensions											
	A, B	A14	A15	A16	A17	A18	øA19	A20	A21	A22 (DIN 13)	A23	A24	A25
107...6	1 in	70	74	85	129.5	57.2	27.8	25	86	M12 × 1.75; 17 deep	68	24.4	0.3
160...6	1 1/4 in	78	85	101.5	129.5	66.7	31.8	32	94	M14 × 2; 19 deep	91.7	28.8	0.5

Port	Working line SAE J518[1]	Reservoir line ISO 6149[4]	Pilot signal	Infeed ISO 6149[4]	Stroking chamber measurement	Stroking chamber measurement
NG	A, B	T_1, T_2	X	S	M_A, M_B	M_1 only for HA3
107	see table above	M22 × 1.5; 15.5 deep	M14 x 1.5; 11.5 deep	M22 × 1.5; 15.5 deep	M14 x 1.5; 11.5 deep	M10 x 1; 10 deep
160		M27 x 2; 19 deep	M14 x 1.5; 11.5 deep	M27 x 2; 19 deep	M14 x 1.5; 11.5 deep	M10 x 1; 10 deep
p_{max} [bar][2]	420	3	100	30	420	420
State[5]	O	X/O (T_2)[3]	O	X	X	X

Port	Brake release, external ISO 6149[4]	Brake release, internal
NG	Bre	Bri
107	M14 x 1.5; 11.5 deep	ø4
160	M14 x 1.5; 11.5 deep	ø4
p_{max} [bar][2]	30	30
State[5]	O/X[6]	X/O[7]

1) Only dimensions according to SAE J518, metric fastening thread is a deviation from the standard
2) Depending on the application, momentary pressure peaks can occur. Keep this in mind when selecting measuring devices and fittings.
3) Depending on installation position, T_1 or T_2 must be connected (see also installation instructions on page 38).
4) The countersink can be deeper than as specified in the standard.
5) O = Must be connected (plugged when delivered)
X = Plugged (in normal operation)
6) Must be connected for external piping. Is plugged for internal channel routing.
7) Is plugged for external channel routing. Must be connected for internal piping.

Speed sensor

The A6VE...U version (“prepared for speed sensor”, i.e. without sensor) is equipped with a spline on the rotary group.
A signal proportional to the rotational speed of the motor can be generated with the mounted DSA speed sensor.
The DSA sensor registers the rotational speed and direction of rotation.
Type code, technical data, dimensions and parameters for the connector, plus safety instructions about the sensor can be found in the relevant data sheet 95133 – DSA. The sensor is mounted on the port provided specially for this with a mounting bolt. On deliveries without sensor, the port is plugged with a pressure-resistant cover.
We recommend ordering the A6VE variable motor complete with mounted sensor.

▼ **Circuit diagram EP**

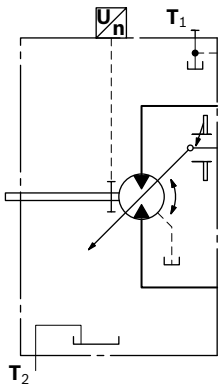

▼ **Dimensions**

Version “V” with mounted speed sensor

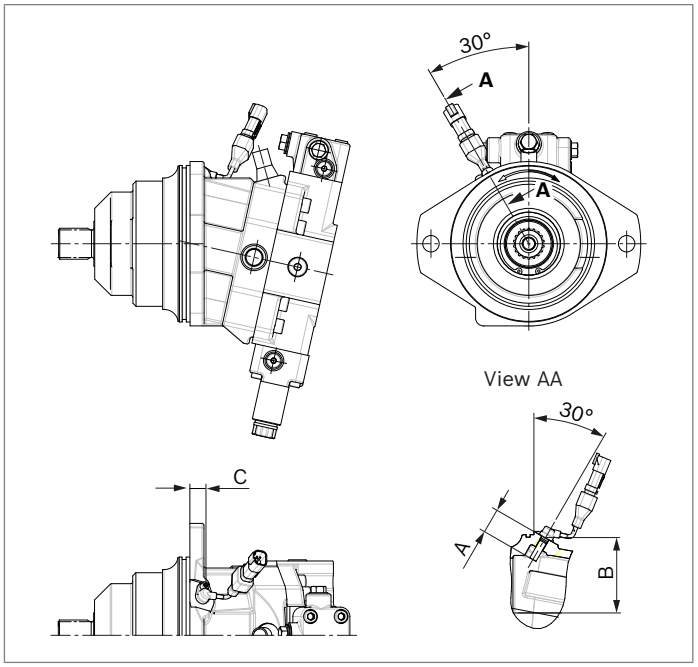

Size		55	80	107	160	200
Number of teeth		54	58	67	75	80
A	Insertion depth (tolerance -0.25)	32	32	32	32	32
B	Contact surface	83.3	87.3	96.3	104.3	109.2
C		26	16.5	14.2	28.5	22.7

Setting range for displacement

	55				80				107			
	$V_{g\,max}$ (cm³/rev)		$V_{g\,min}$ (cm³/rev)		$V_{g\,max}$ (cm³/rev)		$V_{g\,min}$ (cm³/rev)		$V_{g\,max}$ (cm³/rev)		$V_{g\,min}$ (cm³/rev)	
	from	to	from	to	from	to	from	to	from	to	from	to
A	54.8	54.8	0.0	13.3	80.0	80.0	0.0	23.0	107.0	107.0	0.0	22.2
	without screw		M10 × 60 R909154690		without screw		M12 × 70 R909085976		without screw		M12 × 70 R909085976	
B	54.8	54.8	> 13.3	27.0	80.0	80.0	> 23.0	41.0	107.0	107.0	> 22.0	43.8
	without screw		M10 × 70 R909153779		without screw		M12 × 80 R909153075		without screw		M12 × 80 R909153075	
C	54.8	54.8	> 27.0	38.0	80.0	80.0	> 41.0	56.0	107.0	107.0	> 43.8	65.5
	without screw		M10 × 80 R909154058		without screw		M12 × 90 R909154041		without screw		M12 × 90 R909154041	
D	x		x		x		x		107.0	107.0	> 65.5	75.0
									without screw		M12 × 100 R909153975	
E	< 54.8	42.0	0.0	13.0	< 80.0	58.0	0.0	23.0	< 107.0	86.0	0.0	22.2
	M10 × 60 R909154690		M10 × 60 R909154690		M12 × 70 R909085976		M12 × 70 R909085976		M12 × 70 R909085976		M12 × 70 R909085976	
F	< 54.8	42.0	> 13.3	27.0	< 80.0	58.0	> 25.0	41.0	< 107.0	86.0	> 22.2	43.8
	M10 × 60 R909154690		M10 × 70 R909153779		M12 × 70 R909085976		M12 × 80 R909153075		M12 × 70 R909085976		M12 × 80 R909153075	
G	< 54.8	42.0	> 27.0	38.0	< 80.0	58.0	> 41.0	56.0	< 107.0	86.0	> 43.8	65.5
	M10 × 60 R909154690		M10 × 80 R909154058		M12 × 70 R909085976		M12 × 90 R909154041		M12 × 70 R909085976		M12 × 90 R909154041	
H	x		x		x		x		< 107.0	86.0	> 65.5	75.0
									M12 × 70 R909085976		M12 × 100 R909153975	
J	< 42.0	29.0	0.0	13.3	< 58.0	41.0	0.0	23.0	< 86.0	64.0	0.0	22.2
	M10 × 70 R909153779		M10 × 60 R909154690		M12 × 80 R909153075		M12 × 70 R909085976		M12 × 80 R909153075		M12 × 70 R909085976	
K	< 42.0	29.0	> 13.3	27.0	< 58.0	41.0	> 23.0	41.0	< 86.0	64.0	> 22.2	43.8
	M10 × 70 R909153779		M10 × 70 R909153779		M12 × 80 R909153075		M12 × 80 R909153075		M12 × 80 R909153075		M12 × 80 R909153075	
L	< 42.0	29.0	> 27.0	38.0	< 58.0	41.0	> 41.0	56.0	< 86.0	64.0	> 43.8	65.5
	M10 × 70 R909153779		M10 × 80 R909154058		M12 × 80 R909153075		M12 × 90 R909154041		M12 × 80 R909153075		M12 × 90 R909154041	
M	x		x		x		x		< 86.0	64.0	> 65.5	75.0
									M12 × 80 R909153075		M12 × 100 R909153975	

Specify exact settings for $V_{g\,min}$ and $V_{g\,max}$ in plain text when ordering:

- $V_{g\,min}$ = ... cm³, $V_{g\,max}$ =...cm³

Theoretical, maximum setting:

- for $V_{g\,min}$ = 0.7 × $V_{g\,max}$
- for $V_{g\,max}$ = 0.3 × $V_{g\,max}$

Settings that are not listed in the table may lead to damage.
Please contact us.

	160				200			
	$V_{g\,max}$ (cm³/rev)		$V_{g\,min}$ (cm³/rev)		$V_{g\,max}$ (cm³/rev)		$V_{g\,min}$ (cm³/rev)	
	from	to	from	to	from	to	from	to
A	160.0	160.0	0.0	26.0	200.0	200.0	0.0	39.0
	without screw		M12 × 80 R909153075		without screw		M12 × 80 R909153075	
B	160.0	160.0	> 26.0	54.0	200.0	200.0	> 39.0	72.0
	without screw		M12 × 90 R909154041		without screw		M12 × 90 R909154041	
C	160.0	160.0	> 54.0	83.0	200.0	200.0	> 72.0	105.0
	without screw		M12 × 100 R909153975		without screw		M12 × 100 R909153975	
D	160.0	160.0	> 83.0	110.0	200.0	200.0	> 105.0	140.0
	without screw		M12 × 110 R909154212		without screw		M12 × 110 R909154212	
E	< 160.0	136.0	0.0	26.0	< 200.0	164.0	0.0	39.0
	M12 × 80 R909153075		M12 × 80 R909153075		M12 × 80 R909153075		M12 × 80 R909153075	
F	< 160.0	136.0	> 26.0	54.0	< 200.0	164.0	> 39.0	72.0
	M12 × 80 R909153075		M12 × 90 R909154041		M12 × 80 R909153075		M12 × 90 R909154041	
G	< 160.0	136.0	> 54.0	83.0	< 200.0	164.0	> 72.0	105.0
	M12 × 80 R909153075		M12 × 100 R909153975		M12 × 80 R909153075		M12 × 100 R909153975	
H	< 160.0	136.0	> 83.0	110.0	< 200.0	164.0	> 105.0	140.0
	M12 × 80 R909153075		M12 × 110 R909154212		M12 × 80 R909153075		M12 × 110 R909154212	
J	< 136.0	109.0	0.0	26.0	< 164.0	130.5	0.0	39.0
	M12 × 90 R909154041		M12 x 80 R909153075		M12 × 90 R909154041		M12 × 80 R909153075	
K	< 136.0	109.0	> 26.0	54.0	< 164.0	130.5	> 39.0	72.0
	M12 x 90 R909154041		M12 × 90 R909154041		M12 × 90 R909154041		M12 × 90 R909154041	
L	< 136.0	109.0	> 54.0	83.0	< 164.0	130.5	> 72.0	105.0
	M12 × 90 R909154041		M12 × 100 R909153975		M12 × 90 R909154041		M12 × 100 R909153975	
M	< 136.0	109.0	> 83.0	110.0	< 164.0	130.5	> 105.0	140.0
	M12 × 90 R909154041		M12 × 110 R909154212		M12 × 90 R909154041		M12 × 110 R909154212	

Specify exact settings for $V_{g\,min}$ and $V_{g\,max}$ in plain text when ordering:

- $V_{g\,min}$ = ... cm³, $V_{g\,max}$ =...cm³

Theoretical, maximum setting:

- for $V_{g\,min}$ = 0.7 × $V_{g\,max}$
- for $V_{g\,max}$ = 0.3 × $V_{g\,max}$

Settings that are not listed in the table may lead to damage.
Please contact us.

Installation instructions

The axial piston unit must be filled with hydraulic fluid and air bled during commissioning and operation. This must also be observed following a longer standstill as the axial piston unit may empty via the hydraulic lines.
The leakage in the housing area must be directed to the reservoir via the highest drain port (**T_1**, **T_2**).
For combinations of multiple units, make sure that the respective case pressure in each unit is not exceeded. In the event of pressure differences at the drain ports of the units, the shared drain line must be changed so that the maximum permissible case pressure of all connected units is not exceeded at any operational conditions. If this is not possible, separate drain lines must be laid.
To achieve favorable noise values, decouple all connecting lines using elastic elements and avoid above-reservoir installation.
In all operating conditions, the drain line must flow into the reservoir below the minimum fluid level.

Notice
In certain installation positions, an influence on the control or closed loop control can be expected. Gravity, dead weight and case pressure can cause minor characteristic shifts and changes in response time.

Key	
F	Filling / air bleeding
T_1, T_2	Drain port
$h_{t\,min}$	Minimum required immersion depth (200 mm)
h_{min}	Minimum required distance to reservoir bottom (100 mm)

Installation position
See the following examples **1** to **6**.
Further installation positions are available upon request.
Recommended installation position: **1** and **2**

Below-reservoir installation (standard)
Below-reservoir installation means that the axial piston unit is installed outside of the reservoir and below the minimum fluid level of the reservoir.

Installation position	Air bleed	Filling
1 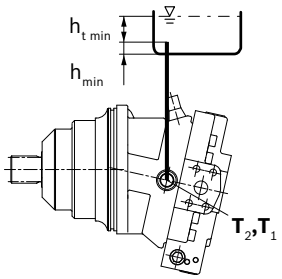		**T_2, T_1**
2 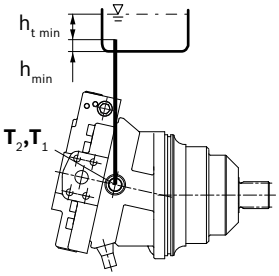		**T_2, T_1**
3 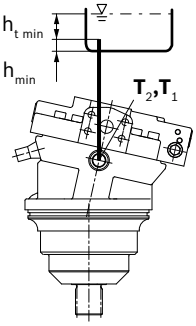		**T_2, T_1**

Above-reservoir installation

Above-reservoir installation means that the axial piston unit is installed above the minimum fluid level of the reservoir.

Installation position	Air bleed	Filling
4 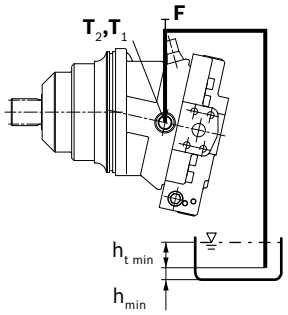	F	T2, T1 (F)
5 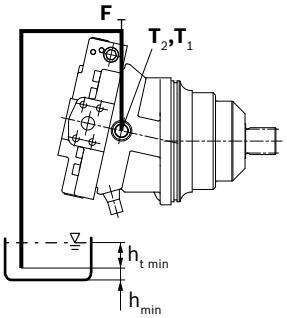	F	T2, T1 (F)
6 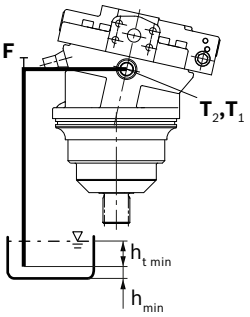	F	T2, T1 (F)

Notice

Port **F** is part of the external piping and must be provided on the customer side to make filling and air bleeding easier.

Project planning notes

- The motor A6VE is designed to be used in open and closed circuits.
- The project planning, installation and commissioning of the axial piston unit requires the involvement of qualified skilled personnel.
- Before using the axial piston unit, please read the corresponding instruction manual completely and thoroughly. If necessary, these can be requested from Bosch Rexroth.
- Before finalizing your design, please request a binding installation drawing.
- The specified data and notes contained herein must be observed.
- For safety reasons, controls with beginning of control at $V_{g\,min}$ (e.g. HA) are not permissible for winch drives, e.g. anchor winches.
- Depending on the operating conditions of the axial piston unit (working pressure, fluid temperature), the characteristic curve may shift.
- Preservation: Our axial piston units are supplied as standard with preservative protection for a maximum of 12 months. If longer preservative protection is required (maximum 24 months), please specify this in plain text when placing your order. The preservation periods apply under optimal storage conditions, details of which can be found in the data sheet 90312 or the instruction manual.
- Not all versions of the product are approved for use in a safety function according to ISO 13849. Please consult the responsible contact person at Bosch Rexroth if you require reliability parameters (e.g. $MTTF_d$) for functional safety.
- Depending on the type of control used, electromagnetic effects can be produced when using solenoids. When a direct current is applied, solenoids do not cause electromagnetic interference nor is their operation impaired by electromagnetic interference.
  Other behavior can result when a modulated direct current (e.g. PWM signal) is applied. Potential electromagnetic interference for persons (e.g. persons with a pacemaker) and other components must be tested by the machine manufacturer.
- Please note the details regarding the tightening torques of port threads and other threaded joints in the instruction manual.
- Working ports:
  - The ports and fastening threads are designed for the specified maximum pressure. The machine or system manufacturer must ensure that the connecting elements and lines correspond to the specified application conditions (pressure, flow, hydraulic fluid, temperature) with the necessary safety factors.
  - The working ports and function ports are only intended to accommodate hydraulic lines.

Safety instructions

- During and shortly after operation, there is a risk of getting burnt on the axial piston unit and especially on the solenoids. Take appropriate safety measures (e.g. by wearing protective clothing).
- Moving parts in control equipment (e.g. valve pistons) can, under certain circumstances get stuck in position as a result of contamination (e.g. impure hydraulic fluid, abrasion, or residual dirt from components). As a result, the hydraulic fluid flow and the build-up of torque in the axial piston unit can no longer respond correctly to the operator's specifications. Even the use of various filter elements (external or internal flow filter) will not rule out a fault but merely reduce the risk.
  The machine/system manufacturer must test whether remedial measures are needed on the machine for the application concerned in order to set the consumer being driven to a safe position (e.g. safe stop) and if necessary to ensure it is properly implemented.
- Moving parts in high-pressure relief valves may in certain circumstances become stuck in an undefined position due to contamination (e.g. contaminated hydraulic fluid). This can result in restriction or loss of the load holding function in lifting winches.
  The machine/system manufacturer must check whether additional measures are required on the machine for the relevant application in order to keep the load in a safe position and ensure they are properly implemented.
- When using the axial piston motor in winch drives, make certain that the technical limit values are not exceeded under all operating conditions. If the axial piston motor is extremely overloaded (e.g. if the maximum permissible rotational speeds are exceeded during weighing of the anchor while the ship is in motion), the rotary group may be damaged and, in the worst case, the axial piston motor may burst. The machine manufacturer / system manufacturer is to undertake additional measures, up to and including encapsulation.

RE 91615/05.2012, Bosch Rexroth AG

Variable plug-in motor
A6VE Series 71

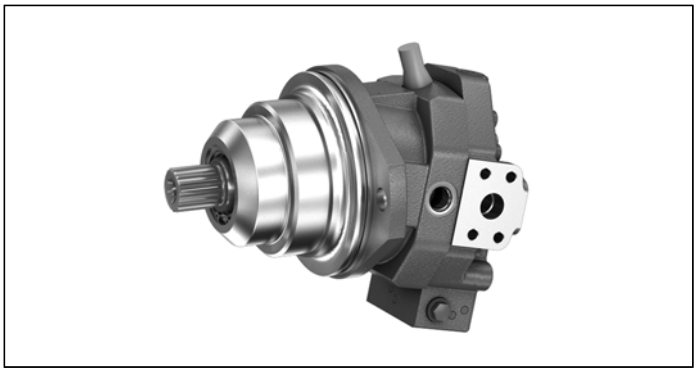

- High pressure motor for integration in mechanical gearbox
- Sizes 60 to 215
- Nominal pressure 450 bar
- Maximum pressure 500 bar
- Open and closed circuits

Features

- Space-saving construction due to recessed mounting flange
- Easy to install. Simply plug into the mechanical gearbox.
- Approved for very high rotational speeds
- High starting efficiency
- Excellent slow-running characteristics
- Wide control range (can be swiveled to zero)
- High torque
- Optional with flushing and boost-pressure valve mounted
- Optional with integrated or mounted counterbalance valve
- Bent-axis design

Contents

Type code	2
Hydraulic fluids	5
Flow direction	6
Working pressure range	7
Technical data	8
HP – Proportional hydraulic control	10
EP – Proportional control, electric	13
HZ – Two-point control, hydraulic	15
EZ – Two-point control, electric	16
HA – Automatic high-pressure related control	17
Dimensions Sizes 60 to 170	20
Dimensions Size 215	22
Connector for solenoids	24
Flushing and boost-pressure valve	25
BVD and BVE counterbalance valves	27
Integrated BVI counterbalance valve	30
Speed sensor	35
Setting range for displacement	36
Installation instructions	38
Project planning notes	40
Safety instructions	41

RE 91616/05.2012, Bosch Rexroth AG

Type code

01	02	03	04	05	06	07	08	09	10		11	12	13	14	15	16	17	18	19	20		21
A6V	**E**					**0**	**0**			**/**	**71**	**M**	**W**	**V**	**0**						**–**	

Axial piston unit

01	Bent-axis design, variable, nominal pressure 450 bar, maximum pressure 500 bar	**A6V**

Operating mode

02	Plug-in motor	**E**

Size (NG)

03	Geometric displacement, see “Technical data” on page 8	**060**	**085**	**115**	**170**	**215**	

Control device				**060**	**085**	**115**	**170**	**215**	
04	Proportional control, hydraulic	positive control	Δp_{St} = 10 bar	●	●	●	●	●	**HP1**
			Δp_{St} = 25 bar	●	●	●	●	●	**HP2**
		negative control	Δp_{St} = 10 bar	●	●	●	●	●	**HP5**
			Δp_{St} = 25 bar	●	●	●	●	●	**HP6**
	Proportional control, electric	positive control	U = 12 V	●	●	●	●	●	**EP1**
			U = 24 V	●	●	●	●	●	**EP2**
		negative control	U = 12 V	●	●	●	●	●	**EP5**
			U = 24 V	●	●	●	●	●	**EP6**
	Two-point control, hydraulic	negative control		–	–	–	●	●	**HZ5**
				●	●	●	●[1]	–	**HZ7**
	Two-point control, electric	negative control	U = 12 V	–	–	–	●	●	**EZ5**
			U = 24 V	–	–	–	●	●	**EZ6**
			U = 12 V	●	●	●	–	–	**EZ7**
			U = 24 V	●	●	●	–	–	**EZ8**
	Automatic control high-pressure related, positive control	with minimum pressure increase	Δp ≤ approx. 10 bar	●	●	●	●	●	**HA1**
		with pressure increase	Δp = 100 bar	●	●	●	●	●	**HA2**
		with minimum pressure increase	Δp ≤ approx. 10 bar	○	○	●	●	–	**HA3**[1]

Pressure control/override		**060**	**085**	**115**	**170**	**215**	
05	Without pressure control/override	●	●	●	●	●	**00**
	Pressure control fixed setting, only for HP5, HP6, EP5 and EP6	●	●	●	●	●	**D1**
	Override of the HA1 and HA2 controls, hydraulic remote controlled, proportional	●	●	●	●	●	**T3**

Connector for solenoids[2] (see page 24)

06	Without connector (without solenoid, only for hydraulic control)	**0**
	DEUTSCH - molded connector, 2-pin, without suppressor diode	**P**

Additional function 1

07	Without additional function	**0**

Additional function 2

08	Without additional function	**0**

● = Available ○ = On request – = Not available

1) Only possible in conjunction with port plate 6 (integrated counterbalance valve)

2) Connectors for other electric components may deviate

01	02	03	04	05	06	07	08	09	10		11	12	13	14	15	16	17	18	19	20		21
A6V	**E**					**0**	**0**			**/**	**71**	**M**	**W**	**V**	**0**						**–**	

Response time damping (for selection, see control)

09	Without damping (standard with HP and EP)		**0**
	Damping	HP, EP, HP5,6D. and EP5,6D., HZ, EZ, HA with BVD/BVE counterbalance valves	**1**
		One-sided in inlet to large stroking chamber (HA)	**4**

Setting range for displacement[3)]

10	$V_{g\,max}$-setting screw	$V_{g\,min}$-setting screw	**060**	**085**	**115**	**170**	**215**	
	No setting screw	short (0-adjustable)	●	●	●	●	●	**A**
		medium	●	●	●	●	●	**B**
		long	●	●	●	●	●	**C**
		extra long	–	–	●	●	●	**D**
	short	short (0-adjustable)	●	●	●	●	●	**E**
		medium	●	●	●	●	●	**F**
		long	●	●	●	●	●	**G**
		extra long	–	–	●	●	●	**H**
	medium	short (0-adjustable)	●	●	●	●	●	**J**
		medium	●	●	●	●	●	**K**
		long	●	●	●	●	●	**L**
		extra long	–	–	●	●	●	**M**

Series

11	Series 7, index 1	**71**

Version of port and fastening threads

12	Metric, port thread with O-ring seal according to ISO 6149	**M**

Direction of rotation

13	Viewed on drive shaft, bidirectional	**W**

Sealing material

14	FKM (fluoroelastomer)	**V**

Drive shaft bearing

15	Standard bearing	**0**

Mounting flange

			060	**085**	**115**	**170**	**215**	
16	ISO 3019-2	160-2	●	–	–	–	–	**P2**
		190-2	–	●	–	–	–	**Y2**
		200-2	–	–	●	●	–	**S2**
		260-4	–	–	–	–	●	**Z2**

Drive shaft

			060	**085**	**115**	**170**	**215**	
17	Splined shaft DIN 5480	W35×2×16×9g	●	–	–	–	–	**Z8**
		W40×2×18×9g	–	●	●	–	–	**Z9**
		W45×2×21×9g	–	–	–	●	–	**A1**
		W50×2×21×9g	–	–	–	–	●	**A2**

● = Available ○ = On request – = Not available

3) The adjustment values for the setting screws can be found in the table (page 36).

Type code

01	02	03	04	05	06	07	08	09	10		11	12	13	14	15	16	17	18	19	20		21
A6V	**E**	**8**				**0**	**0**			**/**	**71**	**M**	**W**	**V**	**0**						**–**	

Working port			**060**	**085**	**115**	**170**	**215**	
18	SAE working ports **A** and **B** at rear		●	●	●	●	●	**1**
	SAE working ports **A** and **B** lateral, opposite		●	●	●	●	●	**2**
	SAE working ports **A** and **B** at bottom only with integrated BVI counterbalance valve[4]		○	○	●	●	–	**6**
	Port plate with 1-level pressure relief valves for mounting a counterbalance valve[5]	BVD20	●	●	●	–	–	**7**
		BVD25, BVE25	–	–	●	●	●	**8**

Valve (see page 25 to 34)			**060**	**085**	**115**	**170**	**215**	
19	Without valve		●	●	●	●	●	**0**
	With BVD/BVE counterbalance valves mounted[6]		●	●	●	●	●	**W**
	Integrated brake release valve (only with port plate 6)	For external piping	○	○	●	●	–	**Y**
		for internal ducting	○	○	●	●	–	**Z**
	With flushing and boost-pressure valve mounted flushing on both sides Flushing flow when: $\Delta p = p_{ND} - p_G$ = 25 bar and v = 10 mm²/s (p_{ND} = low pressure, p_G = case pressure) Only possible with port plates 1 and 2	**Flushing flow q_v [l/min]**						
		3.5	●	●	●	–	–	**A**
		5	●	●	●	–	–	**B**
		8	●	●	●	●	●	**C**
		10	●	●	●	●	●	**D**
		14	●	●	●	–	–	**F**
		15	–	–	–	●[7]	●[7]	**G**
		18	–	–	●[7]	●[7]	●[7]	**I**
		21	–	–	●[7]	●[7]	●[7]	**J**
		27	–	–	●[7]	●[7]	●[7]	**K**
		31	–	–	●[7]	●[7]	●[7]	**L**
		37	–	–	–	●[7]	●[7]	**M**

Speed sensor (see page 35)		**060**	**085**	**115**	**170**	**215**	
20	Without speed sensor	●	●	●	●	●	**0**
	Prepared with DSA speed sensor	●	●	●	●	●	**U**
	With DSA speed sensor mounted[8]	●	●	●	●	●	**V**

Standard / special version		
21	Standard version	**0**
	Standard version with installation variants, e.g. **T** ports open and closed contrary to standard	**Y**
	Special version	**S**

● = Available ○ = On request – = Not available

Notice

▶ Note the project planning notes on page 40.

4) Only for HZ7 and HA3. Supplement specification for integrated BVI counterbalance valve, see separate type code on page 30. Note the restrictions described on page 31.

5) Possible only in combination with HP, EP and HA control Note the restrictions described on page 27.

6) Type code for counterbalance valve to be quoted separately in accordance with data sheet 95522 – BVD or 95525 – BVE Note the restrictions described on pages 27 and 30.

7) Not for EZ7, EZ8, HZ7 and HA3

8) Specify type code of sensor in accordance with data sheet 95133 – DSA separately and observe the requirements for the electronics.

Hydraulic fluids

The A6VE variable motor is designed for operation with HLP mineral oil according to DIN 51524. Application instructions and requirements for hydraulic fluids should be taken from the following data sheets before the start of project planning:

- 90220: Hydraulic fluids based on mineral oils and related hydrocarbons
- 90221: Environmentally acceptable hydraulic fluids
- 90222: Fire-resistant, water-free hydraulic fluids (HFDR/HFDU)
- 90223: Fire-resistant, water-containing hydraulic fluids (HFC, HFB)
- 90225: Axial piston units for operation with water-free and water-containing fire-resistant hydraulic fluids (HFDR, HFDU, HFB, HFC).

The variable motor A6VE is not suitable for operation with HFA hydraulic fluid. If operating with HFB-, HFC- and HFD or environmentally acceptable hydraulic fluids, the limitations regarding technical data or other seals must be observed.

Notes on selection of hydraulic fluid

The hydraulic fluid should be selected such that the operating viscosity in the operating temperature range is within the optimum range (v_{opt} see selection diagram).

Notice

At no point of the component may the temperature be higher than 115 °C. The temperature difference specified in the table is to be taken into account when determining the viscosity in the bearing.

If the above conditions cannot be maintained due to extreme operating parameters, we recommend the use of a flushing and boost-pressure valve (see page 25).

3

Viscosity and temperature of hydraulic fluids

	Viscosity	Temperature	Comment
Cold start[1)]	v_{max} ≤ 1600 mm²/s	θ_{St} ≥ -40 °C	t ≤ 3 min, n ≤ 1000 min^{-1}, without load p ≤ 50 bar
Permissible temperature difference		ΔT ≤ 25 K	between axial piston unit and hydraulic fluid in the system
Warm-up phase	v = 1600 to 400 mm²/s	θ = -40 °C to -25 °C	At p ≤ 0.7 × p_{nom}, n ≤ 0.5 × n_{nom} and t ≤ 15 min
Continuous operation	v = 400 to 10 mm²/s		this corresponds, for VG 46 for example, to a temperature range of +5 °C to +85 °C (see selection diagram)
		θ = -25 °C to +103 °C	measured at port **T** Observe the permissible temperature range of the shaft seal (ΔT = approx. 12 K between bearing/shaft seal and port **T**)
	v_{opt} = 36 to 16 mm²/s		Range of optimum operating viscosity and efficiency
Short-term operation	v_{min} ≥ 7 mm²/s		t < 3 min, p < 0.3 × p_{nom}

1) For application cases below -25 °C, an NBR shaft seal is required (permissible temperature range -40 °C to +90 °C)

▼ **Selection diagram**

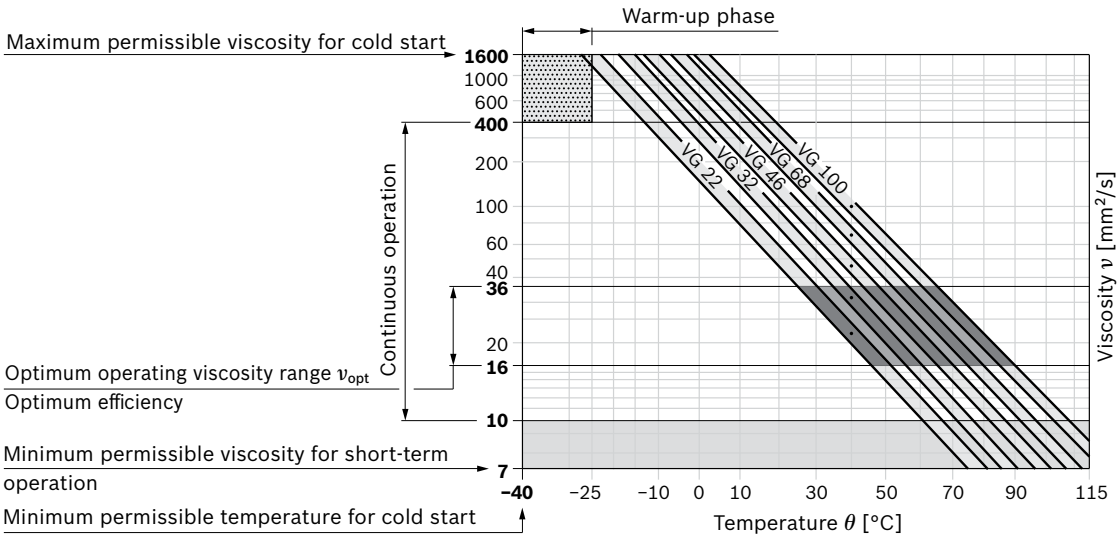

Filtration of the hydraulic fluid

Finer filtration improves the cleanliness level of the hydraulic fluid, which increases the service life of the axial piston unit.

A cleanliness level of at least 20/18/15 is to be maintained according to ISO 4406.

At very high hydraulic fluid temperatures (90 °C to maximum 103 °C, measured at port **T**), a cleanliness level of at least 19/17/14 according to ISO 4406 is necessary.

Effect of case pressure on beginning of control

An increase in the case pressure leads to an increase in the beginning of control for the HP and HA.T3 controls.

For EP and HA control, an increase in case pressure has no effect on the beginning of control.

The factory setting for the beginning of control is made at p_{abs} = 2 bar case pressure.

Flow direction

Direction of rotation, viewed on drive shaft	
clockwise	counter-clockwise
A to **B**	**B** to **A**

Shaft seal

Permissible pressure loading

The service life of the shaft seal is influenced by the rotational speed of the axial piston unit and the leakage pressure in the housing (case pressure). Momentary (t < 0.1 s) pressure peaks of up to 10 bar are permitted. The service life of the shaft seal decreases with increasing frequency of pressure peaks and increasing mean differential pressure. The case pressure must be equal to or higher than the ambient pressure.

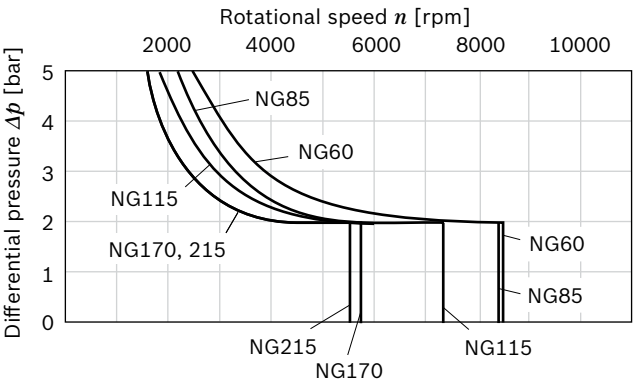

The FKM shaft seal ring may be used for leakage temperatures from -25 °C to +115 °C. For application cases below -25 °C, an NBR shaft seal is required (permissible temperature range: -40 °C to +90 °C).

Working pressure range

Pressure at working port A or B		Definition
Nominal pressure p_{nom}	450 bar	The nominal pressure corresponds to the maximum design pressure.
Maximum pressure p_{max}	500 bar	The maximum pressure corresponds to the maximum working pressure within the single operating period. The sum of the single operating periods must not exceed the total operating period.
Single operating period	10 s	
Total operating period	300 h	
Minimum pressure (high-pressure side)	25 bar	Minimum pressure at the high-pressure side (**A** or **B**) required to prevent damage to the axial piston unit.
Minimum pressure – operation as a pump (inlet)	See diagram below	To avoid damage to the axial piston motor during operation as a pump (change of the high-pressure side at constant direction of rotation, e.g. during braking processes) a minimum pressure has to be ensured at the working port (inlet). The minimum required pressure is dependent on the rotational speed and displacement of the axial piston unit (see characteristic curve).
Summation pressure p_{Su} (pressure **A** + pressure **B**)	700 bar	The summation pressure is the sum of the pressures at the working ports (**A** and **B**).
Rate of pressure change $R_{A\,max}$		Maximum permissible speed of pressure build-up and reduction during a pressure change across the entire pressure range.
with built-in pressure relief valve	9000 bar/s	
without pressure relief valve	16000 bar/s	

▼ **Rate of pressure change $R_{A\,max}$**

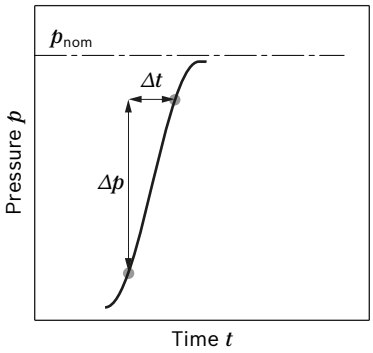

▼ **Pressure definition**

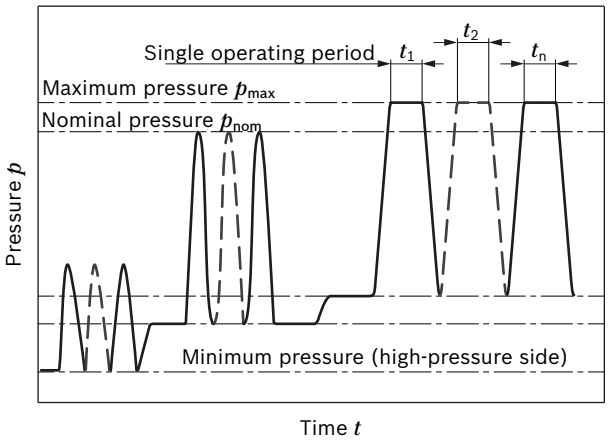

Total operating period = $t_1 + t_2 + ... + t_n$

▼ **Minimum pressure – operation as a pump (inlet)**

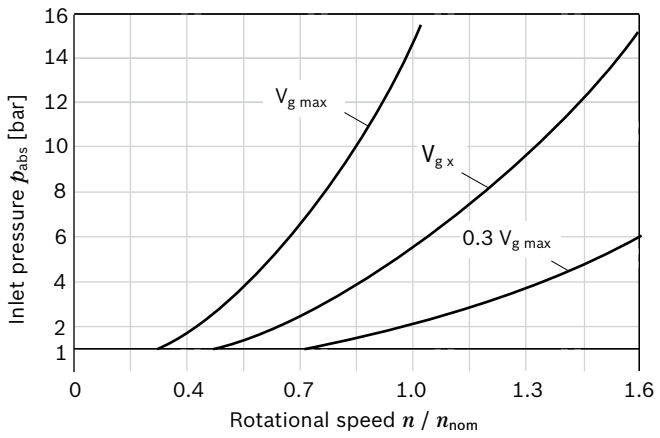

This diagram is only valid for the optimum viscosity range of n_{opt} = 36 to 16 mm²/s.
If the above mentioned conditions cannot be ensured please contact us.

Notice
Working pressure range valid when using hydraulic fluids based on mineral oils. Values for other hydraulic fluids, please contact us.

Technical data

Size		NG		60	85	115	170	215
Displacement geometric, per revolution		$V_{g\,max}$	cm³	62.0	85.2	115.6	171.8	216.5
		$V_{g\,min}$	cm³	0	0	0	0	0
		$V_{g\,x}$	cm³	37	51	69	65	130
Maximum rotational speed[1] (in compliance with maximum permissible inlet flow)	at $V_{g\,max}$	n_{nom}	rpm	4450	3900	3550	3100	2900
	where $V_g < V_{g\,x}$ (see diagram)	n_{max}	rpm	7200	6800	6150	4900	4800
	where $V_{g\,0}$	n_{max}	rpm	8400	8350	7350	5750	5500
Inlet flow[2]	at n_{nom} and $V_{g\,max}$	$q_{v\,max}$	l/min	275	332	410	533	628
Torque[3]	at $V_{g\,max}$ and Δp = 450 bar	T	Nm	444	610	828	1230	1550
Rotary stiffness	$V_{g\,max}$ to $V_g/2$	c_{min}	kNm/rad	15	22	37	52	70
	$V_g/2$ to 0 (interpolated)	c_{min}	kNm/rad	45	68	104	156	196
Moment of inertia for rotary group		J_{TW}	kgm²	0.0043	0.0072	0.0110	0.0213	0.0303
Maximum angular acceleration		α	rad/s²	21000	17500	15500	11000	10000
Case volume		V	l	0.8	1.0	1.5	2.3	3.0
Weight approx.	Without BVI	m	kg	28	36	46	62	78
	With BVI	m	kg	37	45	52	70	–

▼ **Permissible displacement in relation to rotational speed**

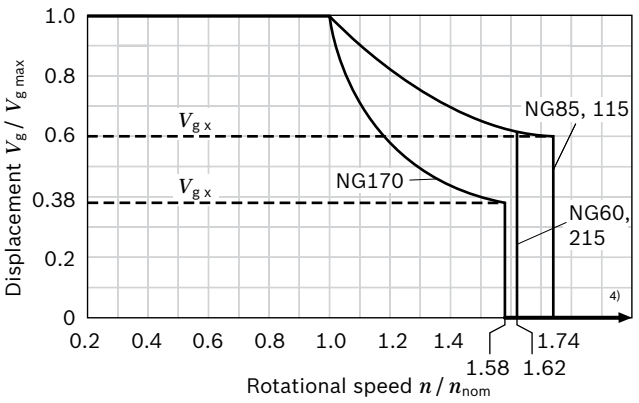

Notice

- Theoretical values, without efficiency and tolerances; values rounded
- Operation above the maximum values or below the minimum values may result in a loss of function, a reduced service life or in the destruction of the axial piston unit. Other permissible limit values, such as speed variation, reduced angular acceleration as a function of the frequency and the permissible angular acceleration at start (lower than the maximum angular acceleration) can be found in data sheet 90261.

Determining the operating characteristics				
Inlet flow	q_v	$= \frac{V_g \times n}{1000 \times \eta_v}$		[l/min]
Rotational speed	n	$= \frac{q_v \times 1000 \times \eta_v}{V_g}$		[rpm]
Torque	T	$= \frac{V_g \times \Delta p \times \eta_{hm}}{20 \times \pi}$		[Nm]
Power	P	$= \frac{2 \pi \times T \times n}{60000}$	$= \frac{q_v \times \Delta p \times \eta_t}{600}$	[kW]

Key

V_g	Displacement per revolution [cm³]
Δp	Differential pressure [bar]
n	Rotational speed [rpm]
η_v	Volumetric efficiency
η_{hm}	Hydraulic-mechanical efficiency
η_t	Total efficiency ($\eta_t = \eta_v \times \eta_{hm}$)

1) The values are applicable:
   – for the optimum viscosity range from v_{opt} = 36 to 16 mm²/s
   – with hydraulic fluid based on mineral oils
2) Observe limitation of input flow due to counterbalance valve (page 27).
3) Torque without radial force, with radial force see page 9.
4) Values in this range on request

Permissible radial and axial forces of the drive shafts

Size	NG		60	85	115	170	215
Drive shaft			W35	W40	W40	W45	W50
Maximum radial force[1)] at distance a (from shaft collar) 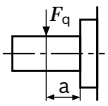	$F_{q\ max}$	N	10266	12323	16727	21220	25016
	a	mm	20.0	22.5	22.5	25.0	27.5
Maximum torque at $F_{q\ max}$	$T_{q\ max}$	Nm	444	610	828	1200	1550
Maximum differential pressure at V_{gmax} and $F_{q\ max}$	$\Delta p_{q\ max}$	bar	450	450	450	440	450
Maximum axial force, at standstill or depressurized operation 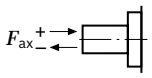	$+F_{ax\ max}$	N	0	0	0	0	0
	$-F_{ax\ max}$	N	500	710	900	1120	1250
Permissible axial force per bar working pressure	$+F_{ax\ perm/bar}$	N/bar	7.5	9.6	11.3	15.1	17.0

Effect of radial force F_q on the service life of bearings

By selecting a suitable direction of radial force F_q, the load on the bearings, caused by the internal rotary group forces can be reduced, thus optimizing the service life of the bearings. Recommended position of mating gear is dependent on direction of rotation. Examples:

▼ **Toothed gear output drive**

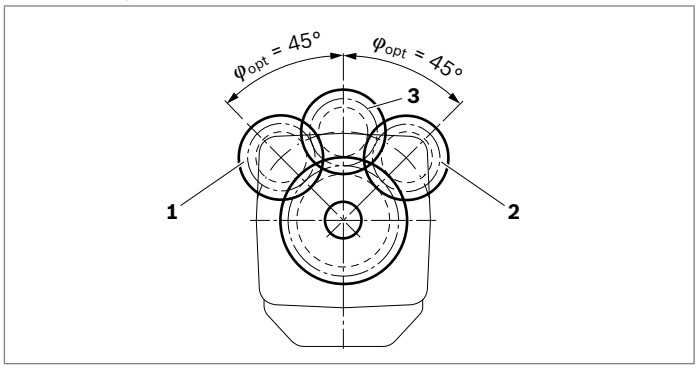

1 "Counter-clockwise" rotation, pressure at port **B**
2 "Clockwise" rotation, pressure at port **A**
3 Bidirectional direction of rotation

Notice

- The values given are maximum values and do not apply to continuous operation.
- The permissible axial force in direction $-F_{ax}$ is to be avoided as the lifetime of the bearing is reduced.
- Special requirements apply in the case of belt drives. Please contact us.

1) With intermittent operation

HP – Proportional hydraulic control

The proportional hydraulic control provides infinite adjustment of the displacement. The control is proportional to the pilot pressure at port **X**.

HP1, HP2 positive control

- Beginning of control at $V_{g\,min}$ (minimum torque, maximum permissible rotational speed at minimum pilot pressure)
- End of control at $V_{g\,max}$ (maximum torque, minimum rotational speed at maximum pilot pressure)

HP5, HP6 negative control

- Beginning of control at $V_{g\,max}$ (maximum torque, minimum rotational speed at minimum pilot pressure).
- End of control at $V_{g\,min}$ (minimum torque, maximum permissible rotational speed, at maximum pilot pressure).

Notice

- Maximum permissible pilot pressure: p_{St} = 100 bar
- The control oil is internally taken out of the high pressure side of the motor (**A** or **B**). For reliable control, a working pressure of at least 30 bar is necessary in **A** (**B**). If a control operation is performed at a working pressure < 30 bar, an auxiliary pressure of at least 30 bar must be applied at port **G** using an external check valve. For lower pressures, please contact us.
  Bear in mind that pressures up to 500 bar can occur at port **G**.
- Specify the desired beginning of control in plain text when ordering, e.g. beginning of control at 10 bar.
- The beginning of control and the HP characteristic curve are influenced by the case pressure. An increase in the case pressure causes an increase in the beginning of control (see page 6) and thus a parallel displacement of the characteristic curve.
- A leakage flow of maximum 0.3 l/min can occur at port **X** due to internal leakage (working pressure > pilot pressure). The control is to be suitably configured to avoid an independent build-up of pilot pressure.

Response time damping

The response time damping impacts the pivot behavior of the motor and consequently the machine response speed.

Standard for sizes 60 to 215

HP without damping.

HP.D with throttle pin on both sides, symmetrical (see table)

Optional for sizes 60 to 215

HP with throttle pin on both sides, symmetrical (see table)

▼ **Throttle pin overview**

Size	060	085	115	170	215
Groove size [mm]	0.45	0.45	0.55	0.55	0.65

HP1, HP5 – pilot pressure increase Δp_{St} = 10 bar

HP1 positive control

A pilot pressure increase of 10 bar at port **X** results in an increase in displacement from $V_{g\,min}$ to $V_{g\,max}$.

HP5 negative control

A pilot pressure increase of 10 bar at port **X** results in a decrease in displacement from $V_{g\,max}$ to $V_{g\,min}$.

Beginning of control, setting range 2 to 20 bar

Standard setting:

beginning of control at 3 bar (end of control at 13 bar)

▼ **Characteristic curve**

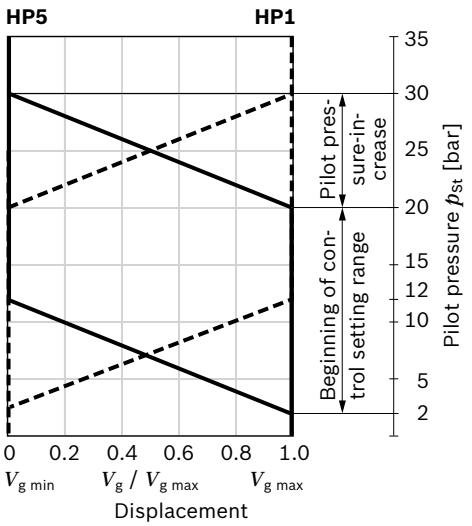

HP2, HP6 pilot pressure increase Δp_{St} = 25 bar

HP2 positive control

A pilot pressure increase of 25 bar at port **X** results in an increase in displacement from $V_{g\,min}$ to $V_{g\,max}$.

HP6 negative control

A pilot pressure increase of 25 bar at port **X** results in a decrease in displacement from $V_{g\,max}$ to $V_{g\,min}$.

Beginning of control, setting range 5 to 35 bar

Standard setting: beginning of control at 10 bar (end of control at 35 bar)

▼ **Characteristic curve**

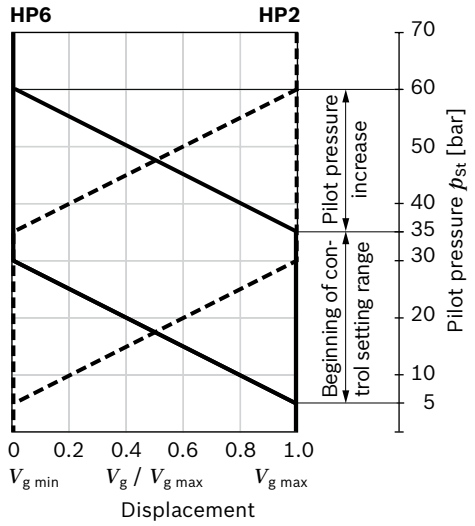

▼ **Circuit diagram HP1, HP2 (positive control)**

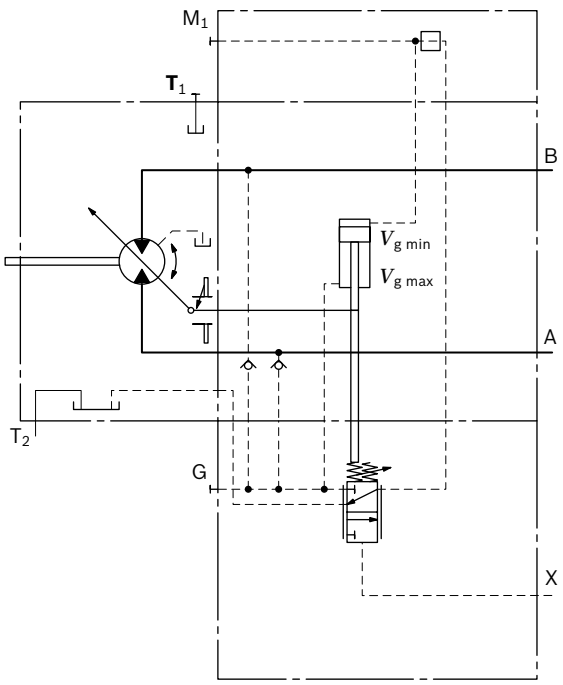

▼ **Circuit diagram HP5, HP6 (negative control)**

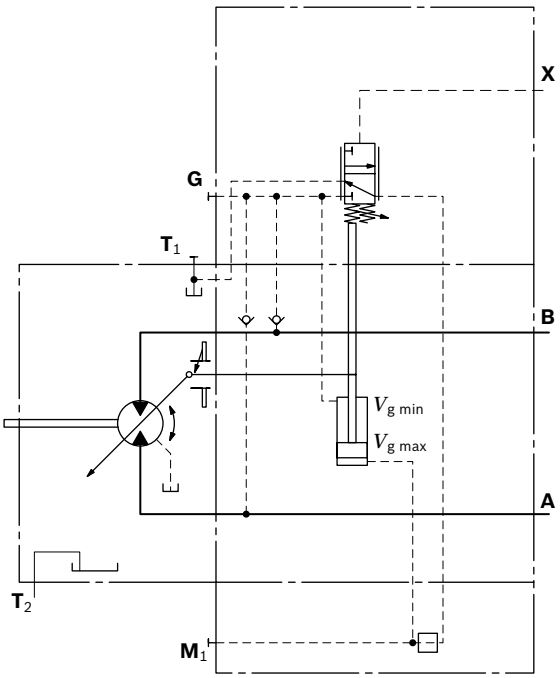

3

HP – Proportional hydraulic control

HP5D1, HP6D1 Pressure control, fixed setting

The pressure control overrides the HP control function. If the load torque or a reduction in motor swivel angle causes the system pressure to reach the setpoint value of the pressure control, the motor will swivel towards a larger angle.

The increase in displacement and the resulting reduction in pressure cause the control deviation to decrease. With the increase in displacement the motor develops more torque, while the pressure remains constant.

Setting range of the pressure control valve 80 to 450 bar

▼ **Circuit diagram HP5D1, HP6D1 (negative control)**

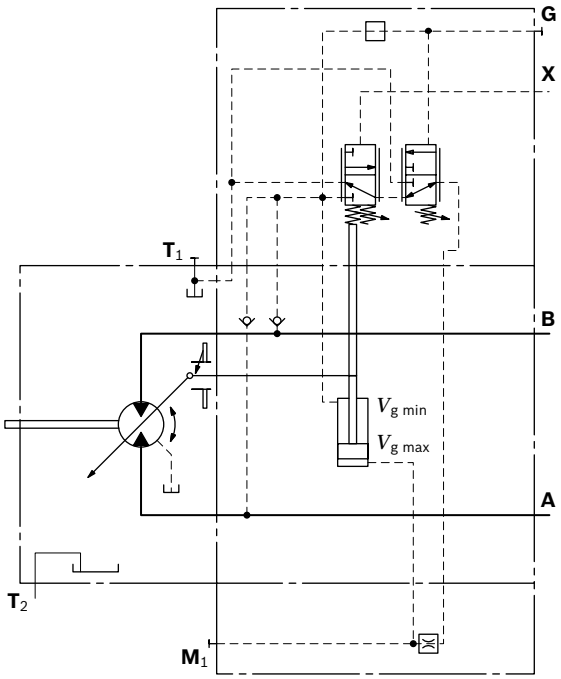

EP – Proportional control, electric

The proportional electric control provides infinite adjustment of the displacement. Control is proportional to the electric control current applied to the solenoid.

EP1, EP2 positive control

- Beginning of control at $V_{g\,min}$ (minimum torque, maximum permissible rotational speed at minimum control current)
- End of control at $V_{g\,max}$ (maximum torque, minimum rotational speed at maximum control current)

EP5, EP6 negative control

- Beginning of control at $V_{g\,max}$ (maximum torque, minimum rotational speed at minimum control current)
- End of control at $V_{g\,min}$ (minimum torque, maximum permissible rotational speed at maximum control current)

▼ **Characteristic curve**

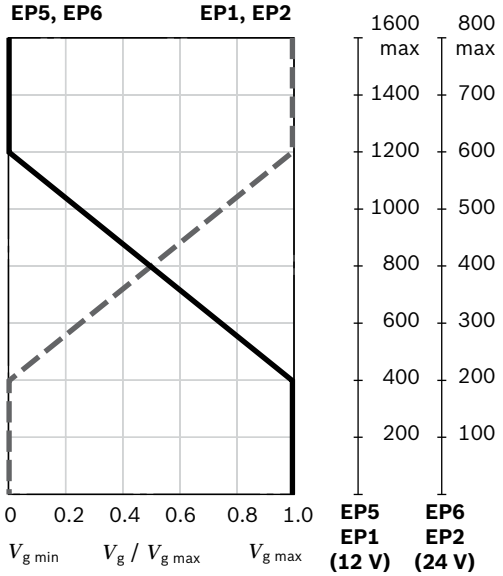

Notice

The control oil is internally taken out of the high pressure side of the motor (**A** or **B**). For reliable control, a working pressure of at least 30 bar is required in **A** (**B**). If a control operation is performed at a working pressure < 30 bar, an auxiliary pressure of at least 30 bar must be applied at port **G** using an external check valve. For lower pressures, please contact us.

Bear in mind that pressures up to 500 bar can occur at port **G**.

Response time damping

The response time damping impacts the pivot behavior of the motor and consequently the machine response speed.

Standard for sizes 60 to 215

EP without damping.

EP.D with throttle pin on both sides, symmetrical (see table)

Optional for sizes 60 to 215

(see table)

▼ **Throttle pin overview**

Size	60	85	115	170	215
Groove size [mm]	0.45	0.45	0.55	0.55	0.65

Technical data, solenoid	EP1, EP5	EP2, EP6
Voltage	12 V (±20%)	24 V (±20%)
Control current		
Beginning of control	400 mA	200 mA
End of control	1200 mA	600 mA
Current limit	1.54 A	0.77 A
Nominal resistance (at 20 °C)	5.5 Ω	22.7 Ω
Dither		
Frequency	100 Hz	100 Hz
Minimum oscillation range[1)]	240 mA	120 mA
Duty cycle	100%	100%
Type of protection: see connector version page 24		

Various BODAS controllers with application software and amplifiers are available for controlling the proportional solenoids.

Further information can also be found on the internet at www.boschrexroth.de/mobilelektronik.

1) Minimum required oscillation range of the control current $\Delta I_{p\text{-}p}$ (peak to peak) within the respective control range (start of control to end of control)

▼ **Circuit diagram EP1, EP2 (positive control)**

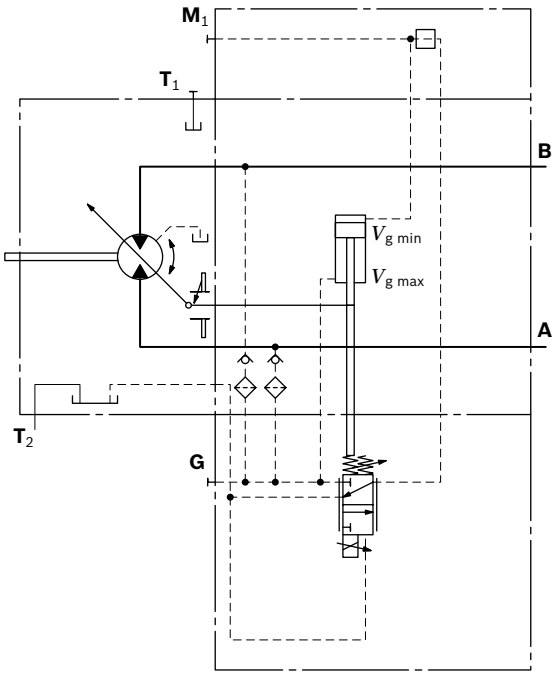

▼ **Circuit diagram EP5, EP6 (negative control)**

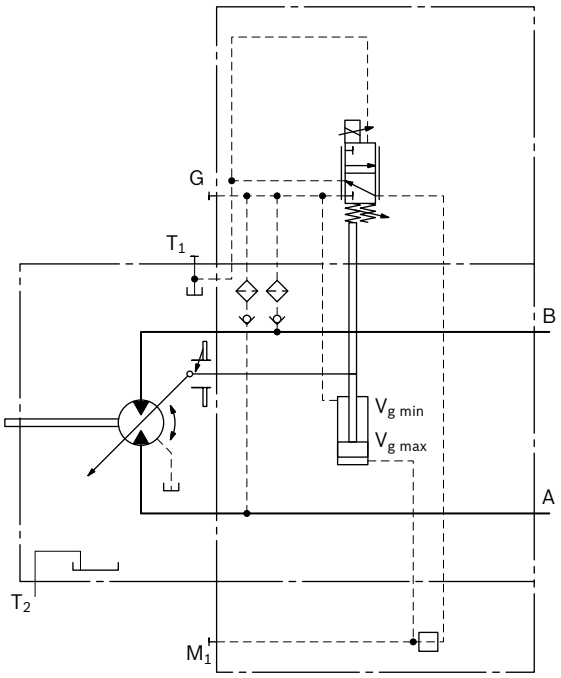

EP5D1, EP6D1 Pressure control, fixed setting

The pressure control overrides the EP control function.
If the load torque or a reduction in motor swivel angle causes the system pressure to reach the setpoint value of the pressure control, the motor will swivel towards a larger angle.
The increase in displacement and the resulting reduction in pressure cause the control deviation to decrease. With the increase in displacement the motor develops more torque, while the pressure remains constant.
Setting range of the pressure control valve 80 to 450 bar

▼ **Circuit diagram EP5D1, EP6D1 (negative control)**

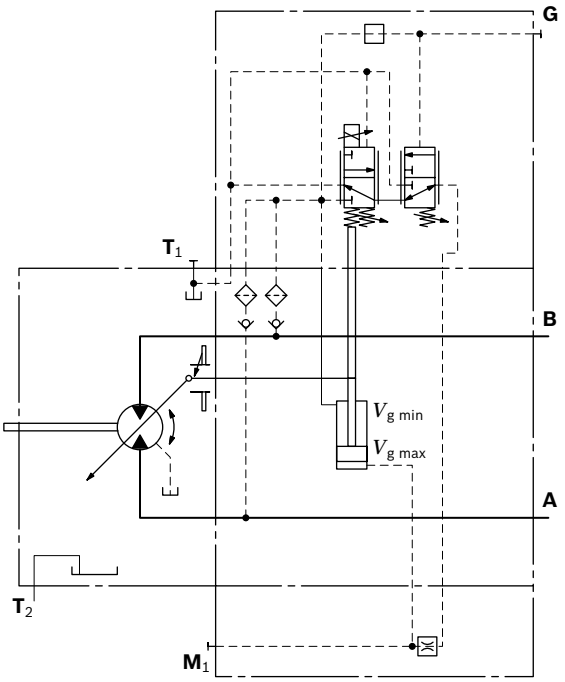

HZ – Two-point control, hydraulic

The two-point hydraulic control allows the displacement to be set to either $V_{g\,min}$ or $V_{g\,max}$ by switching the pilot pressure at port **X** on or off.

HZ5, HZ7 negative control

- Position at $V_{g\,max}$ (without pilot pressure, maximum torque, minimum rotational speed)
- Position at $V_{g\,min}$ (with pilot pressure > 15 bar activated, minimum torque, maximum permissible rotational speed)

▼ **Characteristic curve HZ5, HZ7**

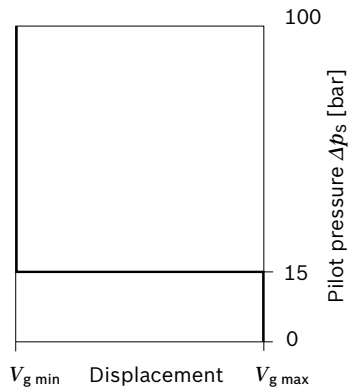

Notice

- Maximum permissible pilot pressure: 100 bar
- The control oil is internally taken out of the high pressure side of the motor (**A** or **B**). For reliable control, a working pressure of at least 30 bar is required in **A** (**B**). If a control operation is performed at a working pressure < 30 bar, an auxiliary pressure of at least 30 bar must be applied at port **G** using an external check valve. For lower pressures, please contact us.
  Bear in mind that pressures up to 500 bar can occur at port **G**.
- A leakage flow of maximum 0.3 l/min occurs at port **X** (working pressure > pilot pressure). To avoid a build-up of pilot pressure, pressure must be relieved from port **X** to the reservoir.

Response time damping

The response time damping impacts the pivot behavior of the motor and consequently the machine response speed.

Standard for sizes 170 and 215

HZ5 with throttle pin on both sides, symmetrical (see table)

Standard for sizes 115 and 170 with BVI

HZ7 with throttle pin on both sides 0.30, symmetrical

Standard for sizes 60 to 115

HZ7 (synchronous piston) with throttle pin on both sides, symmetrical (see table)

▼ **Throttle pin overview**

Size	60	85	115	170	215
Groove size [mm]	0.30	0.30	0.30	0.55	0.65

▼ **Circuit diagram HZ5 (negative control) sizes 170 and 215**

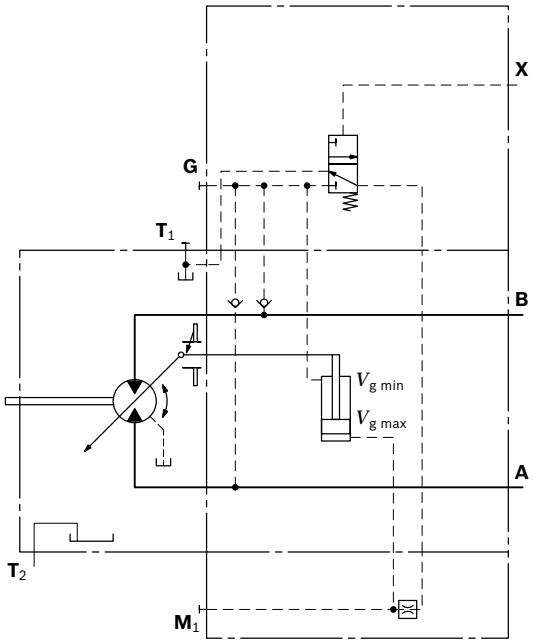

▼ **Circuit diagram HZ7 (negative control) size 60 to 115**

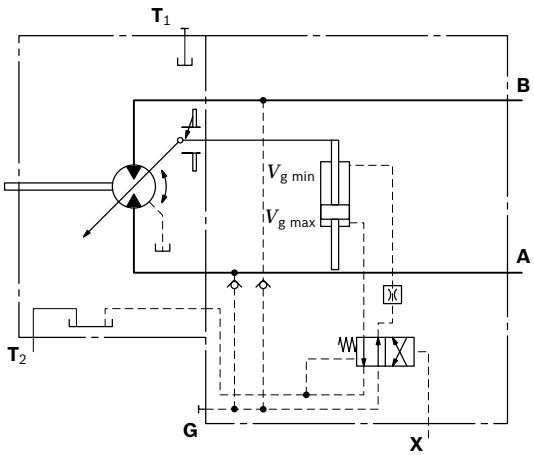

EZ – Two-point control, electric

The two-point electric control allows the displacement to be set to either $V_{g\,min}$ or $V_{g\,max}$ by switching the electric current to a switching solenoid on or off.

Notice

The control oil is internally taken out of the high pressure side of the motor (**A** or **B**). For reliable control, a working pressure of at least 30 bar is required in **A** (**B**). If a control operation is performed at a working pressure < 30 bar, an auxiliary pressure of at least 30 bar must be applied at port **G** using an external check valve. For lower pressures, please contact us.

Bear in mind that pressures up to 500 bar can occur at port **G**.

Response time damping

The response time damping impacts the pivot behavior of the motor and consequently the machine response speed.

Standard for sizes 170 and 215

EZ5, EZ6 with throttle pin on both sides, symmetrical (see table)

Standard for sizes 60 to 115

EZ7, EZ8 (synchronous piston) with throttle pin on both sides, symmetrical (see table)

▼ **Throttle pin overview**

Size	60	85	115	170	215
Groove size [mm]	0.30	0.30	0.30	0.55	0.65

Sizes 170 and 215

Technical data, solenoid with Ø37	EZ5	EZ6
Voltage	12 V (±20%)	24 V (±20%)
Position $V_{g\,max}$	de-energized	de-energized
Position $V_{g\,min}$	Current Switched on	Current Switched on
Nominal resistance (at 20 °C)	5.5 Ω	21.7 Ω
Nominal power	26.2 W	26.5 W
Minimum active current required	1.32 A	0.67 A
Duty cycle	100%	100%
Type of protection: see connector version page 24		

▼ **Circuit diagram EZ5, EZ6 (negative control)**

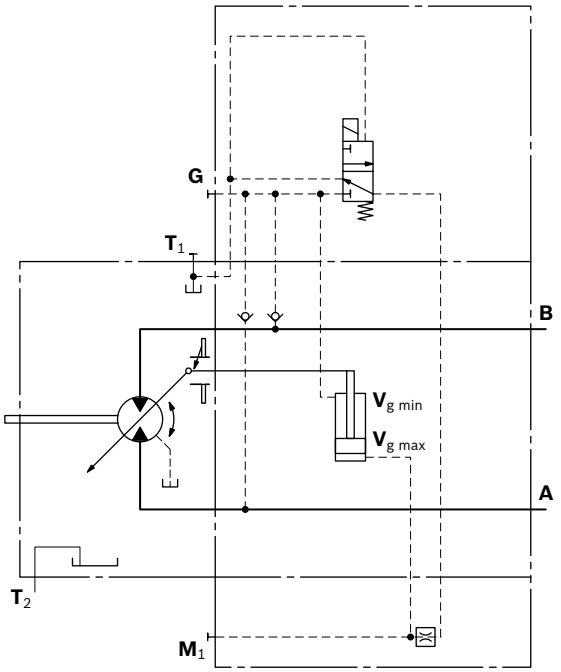

Sizes 60 to 115

Technical data, solenoid with Ø45	EZ7	EZ8
Voltage	12 V (±20%)	24 V (±20%)
Position $V_{g\,max}$	de-energized	de-energized
Position $V_{g\,min}$	Current Switched on	Current Switched on
Nominal resistance (at 20 °C)	4.8 Ω	19.2 Ω
Nominal power	30 W	30 W
Minimum active current required	1.5 A	0.75 A
Duty cycle	100%	100%
Type of protection: see connector version page 24		

▼ **Circuit diagram EZ7, EZ8 (negative control)**

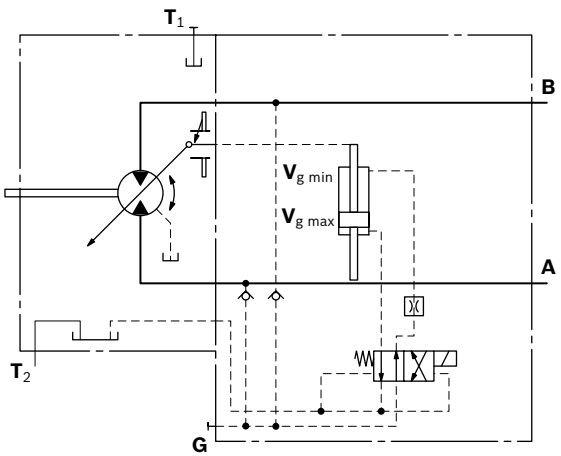

HA – Automatic high-pressure related control

The automatic high-pressure related control adjusts the displacement automatically depending on the working pressure.
The beginning of control of the A6VE motor with HA control is $V_{g\,min}$ (maximum rotational speed and minimum torque). The control device measures internally the working pressure at **A** or **B** (no control line required) and upon reaching the beginning of control, the controller swivels the motor from $V_{g\,min}$ to $V_{g\,max}$. The displacement is modulated between $V_{g\,min}$ and $V_{g\,max}$ depending on the load.

HA1, HA2, HA3 positive control

- Beginning of control at $V_{g\,min}$ (minimum torque, maximum rotational speed)
- End of control at $V_{g\,max}$ (maximum torque, minimum rotational speed)

Notice

- For safety reasons, winch drives are not permissible with beginning of control at $V_{g\,min}$ (standard for HA).
- The control oil is internally taken out of the high pressure side of the motor (**A** or **B**). For reliable control, a working pressure of at least 30 bar is required in **A** (**B**). If a control operation is performed at a working pressure < 30 bar, an auxiliary pressure of at least 30 bar must be applied at port **G** using an external check valve. For lower pressures, please contact us.
  Bear in mind that pressures up to 500 bar can occur at port **G**.
- The beginning of control and the HA.T3 characteristic curve are influenced by case pressure. An increase in the case pressure causes an increase in the beginning of control (see page 6) and thus a parallel displacement of the characteristic curve.
- A leakage flow of maximum 0.3 l/min occurs at port **X** (working pressure > pilot pressure). To avoid a build-up of pilot pressure, pressure must be relieved from port **X** to the reservoir. Only for HA.T control.

Response time damping

The response time damping impacts the pivot behavior of the motor and consequently the machine response speed.

Standard for sizes 60 to 215

HA1,2 with one-sided throttle pin, throttling occurs from $V_{g\,min}$ to $V_{g\,max}$. (see table) HA3 and HA3T3 with BVI and throttle pin on both sides, 0.30, symmetrical

▼ **Throttle pin overview**

Size	60	85	115	170	215
Groove size [mm]	0.45	0.45	0.55	0.55	0.65

Standard for sizes 60 to 215

HA with BVD or BVE counterbalance valves with throttle screw (see table)

▼ **Throttle screw**

Size	60	85	115	170	215
Diameter [mm]	0.80	0.80	0.80	0.80	0.80

HA1, HA3 with minimum pressure increase, positive control

A working pressure increase of Δp ≤ approx. 10 bar results in an increase in displacement from $V_{g\,min}$ to $V_{g\,max}$.
Beginning of control, setting range 80 to 350 bar
Specify the desired beginning of control in plain text when ordering, e.g. beginning of control at 300 bar.

▼ **Characteristic curve HA1, HA3**

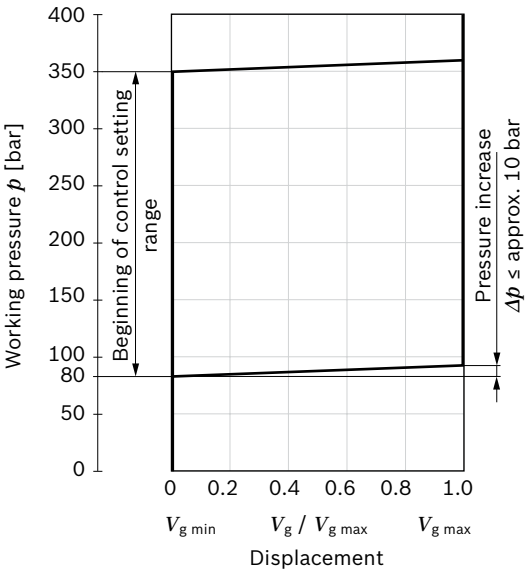

▼ **Circuit diagram HA1**

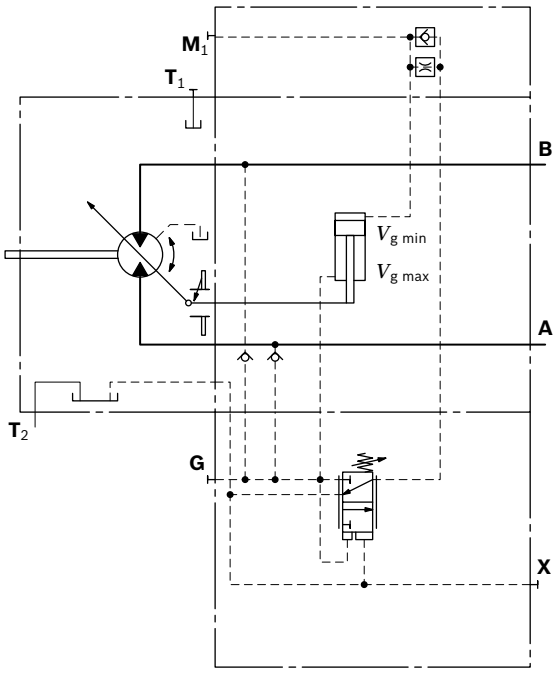

▼ **Circuit diagram HA3**

With integrated BVI counterbalance valve, see page 32

HA2 with pressure increase, positive control

A working pressure increase of Δp ≤ approx. 100 bar results in an increase in displacement from $V_{g\,min}$ to $V_{g\,max}$.
Beginning of control, setting range 80 to 350 bar
Specify the desired beginning of control in plain text when ordering, e.g. beginning of control at 200 bar.

▼ **Characteristic curve HA2**

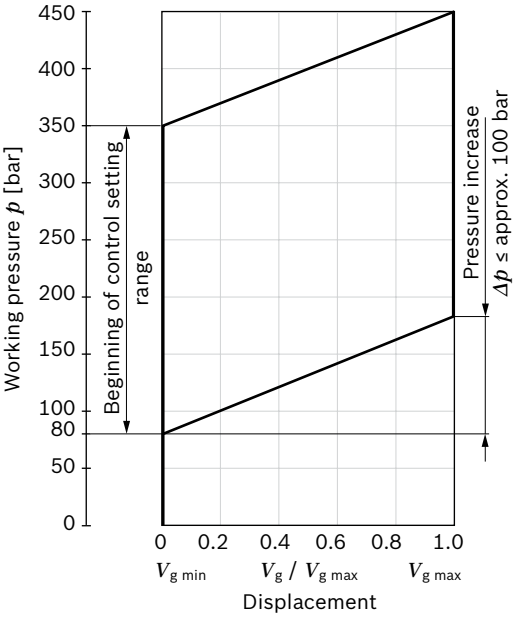

▼ **Circuit diagram HA2**

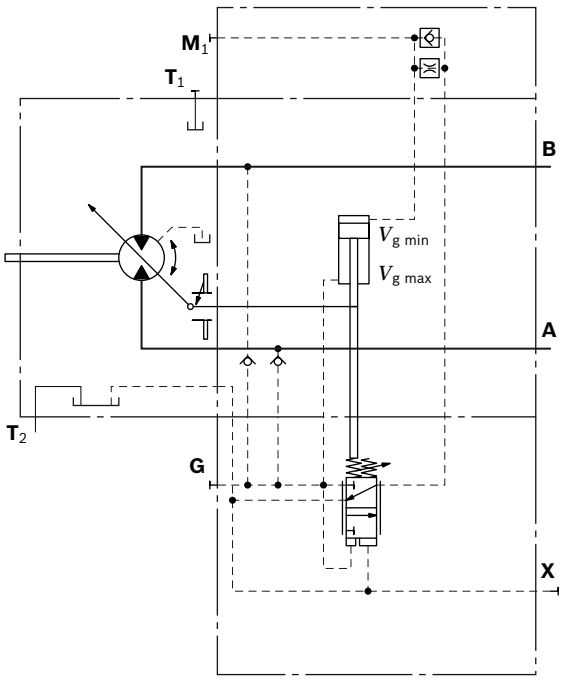

HA.T3 override, hydraulic, remote controlled, proportional

With the HA.T3 control, the beginning of control can be influenced by applying a pilot pressure to port **X**.
For each 1 bar of pilot pressure increase, the beginning of control is reduced by 17 bar.

Beginning of control setting	300 bar	300 bar
Pilot pressure at port **X**	0 bar	10 bar
Beginning of control at	300 bar	130 bar

Notice

Maximum permissible pilot pressure 100 bar.

▼ **Circuit diagram HA1T3**

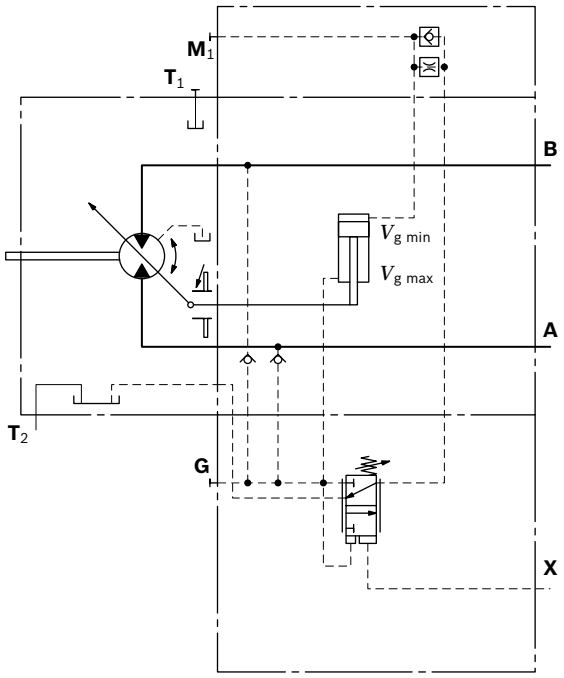

▼ **Circuit diagram HA2T3**

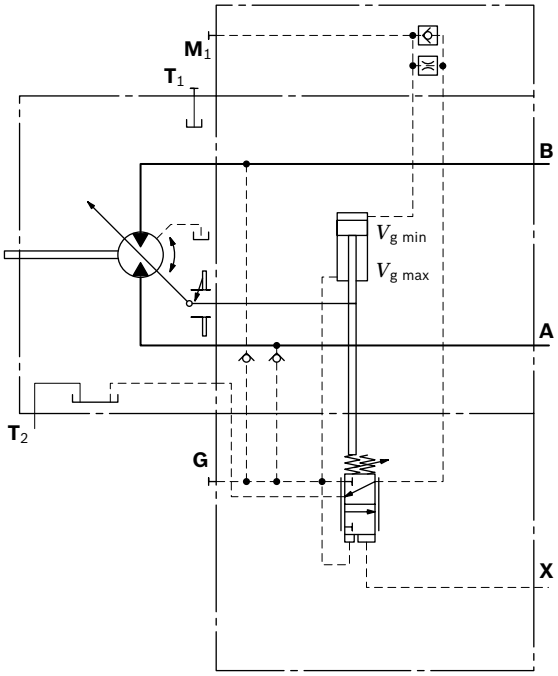

▼ **Circuit diagram HA3T3**

With integrated BVI counterbalance valve, see page 32

Dimensions

Sizes 60 to 170

HZ7 – Two-point control, hydraulic

Port plate 2 — SAE working ports **A** and **B** lateral, opposing

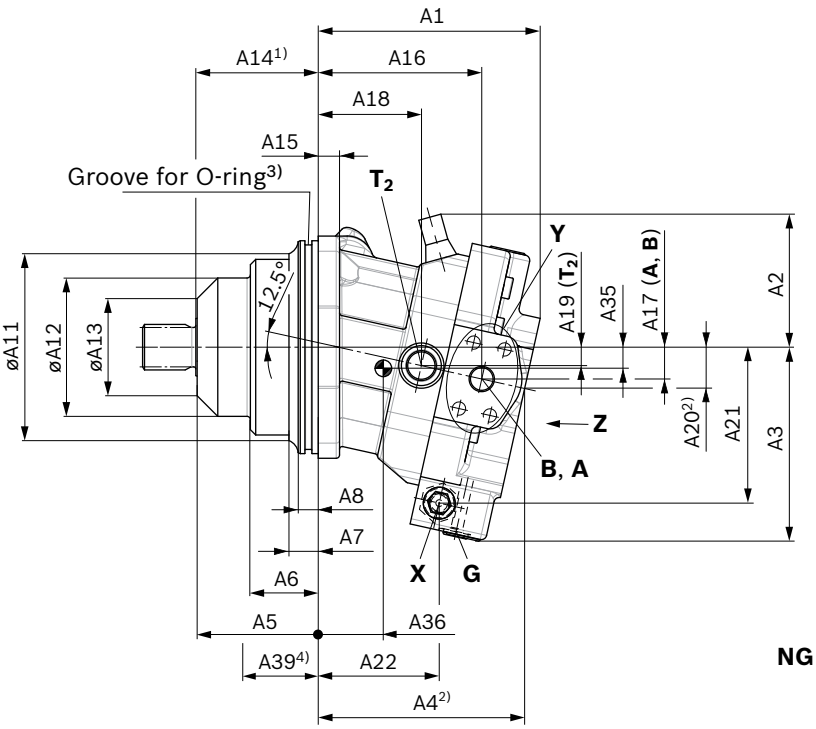

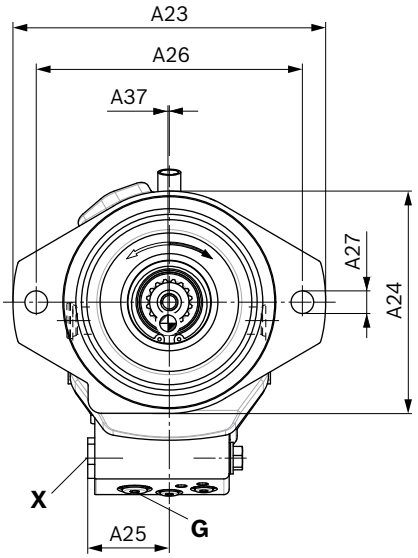

NG 170 port plate HZ5

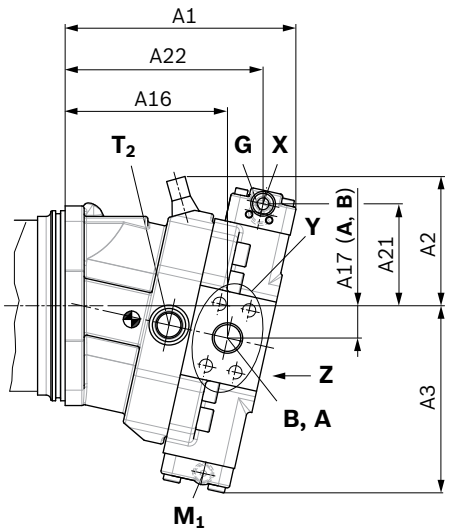

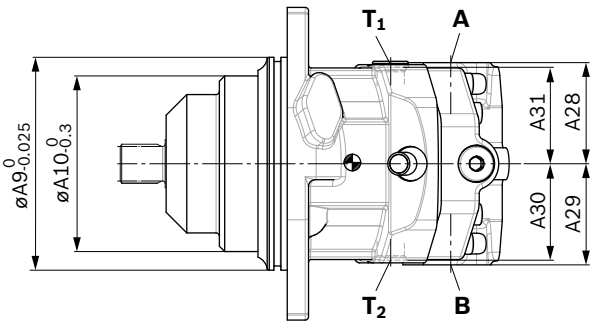

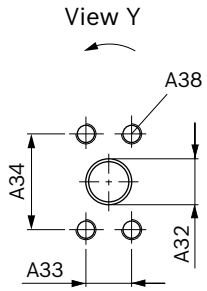

Center of gravity

1) To shaft collar
2) Port plate 1 — SAE working ports **A** and **B** at rear
3) The O-ring is not included in the scope of delivery
4) Difference in dimension of mounting flange A6VM to A6VE

Notice

Dimensions of the control devices, see data sheet 91610.

NG	A1	A2	A3	A4	A5	A6	A7	A8	øA9	øA10	øA11	øA12	øA13	A14	A15	A16
60[1)]	167	100	146	153	91	51	22	15	160	132	140.5	104	73	92	16	123
85[1)]	176	114	161	164	109.5	65	30	15	190	143	151	116	88	110.5	18	130
115[1)]	187	121	172	175	121.8	73	35	15	200	160	168	132	90	122.8	18	137
170[2)]	243	133	197	212	122	67	29	15	200	180	188	146	100	123	20	171

NG	A17	A18	A19	A20	A21	A22	A23	A24	A25	A26	A27	A28	A29	A30	A31	A32
60[1)]	24	77	14	30	117	91	235	167	57	200	17	76	76	73	73	19
85[1)]	28	78	16	35	132	93	260	198	57	224	21	82	82	78.5	78.5	25
115[1)]	30	82	17	38	143	99	286	210	61	250	21	90	90	86.5	86.5	25
170[2)]	34	109	20	43	107	208	286	210	40.5	250	21	102	102	98.5	98.5	32

NG	A33	A34	A35	A36	A37	A38	A39	O-ring
60[1)]	23.8	50.8	15.8	48.8	1	M10 × 1.5; 17 deep	60	150 × 4
85[1)]	27.8	57.2	15.9	44.2	0.6	M12 × 1.75; 17 deep	78.5	182 × 4
115[1)]	27.8	57.2	15.2	42.9	0.5	M12 × 1.75; 17 deep	83	192 × 4
170[2)]	31.8	66.7	14.3	69.9	0.5	M14 × 2; 19 deep	83	192 × 4

▼ **Drive shaft**

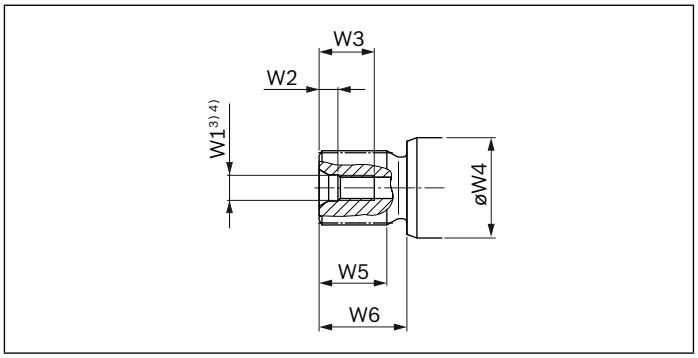

NG	Splined shaft DIN 5480	W1	W2	W3	øW4	W5	W6
60	**Z8 –** W35×2×16×9g	M12 × 1.75	9.5	28	45	32	40
85	**Z9 –** W40×2×18×9g	M16 × 2	12	36	50	37	45
115	**Z9 –** W40×2×18×9g	M16 × 2	12	36	60	37	45
170	**A1 –** W45×2×21×9g	M16 × 2	12	36	70	42	50
215	**A2 –** W50×2×24×9g	M16 × 2	12	36	70	44	55

1) HZ7 control
2) HZ5 control
3) For notes on tightening torques, see the instruction manual.
4) Center bore according to DIN 332 (thread according to DIN 13)

Dimensions

Size 215

HZ5 – Two-point control, hydraulic

Port plate 2 — SAE working ports **A** and **B** lateral, opposing

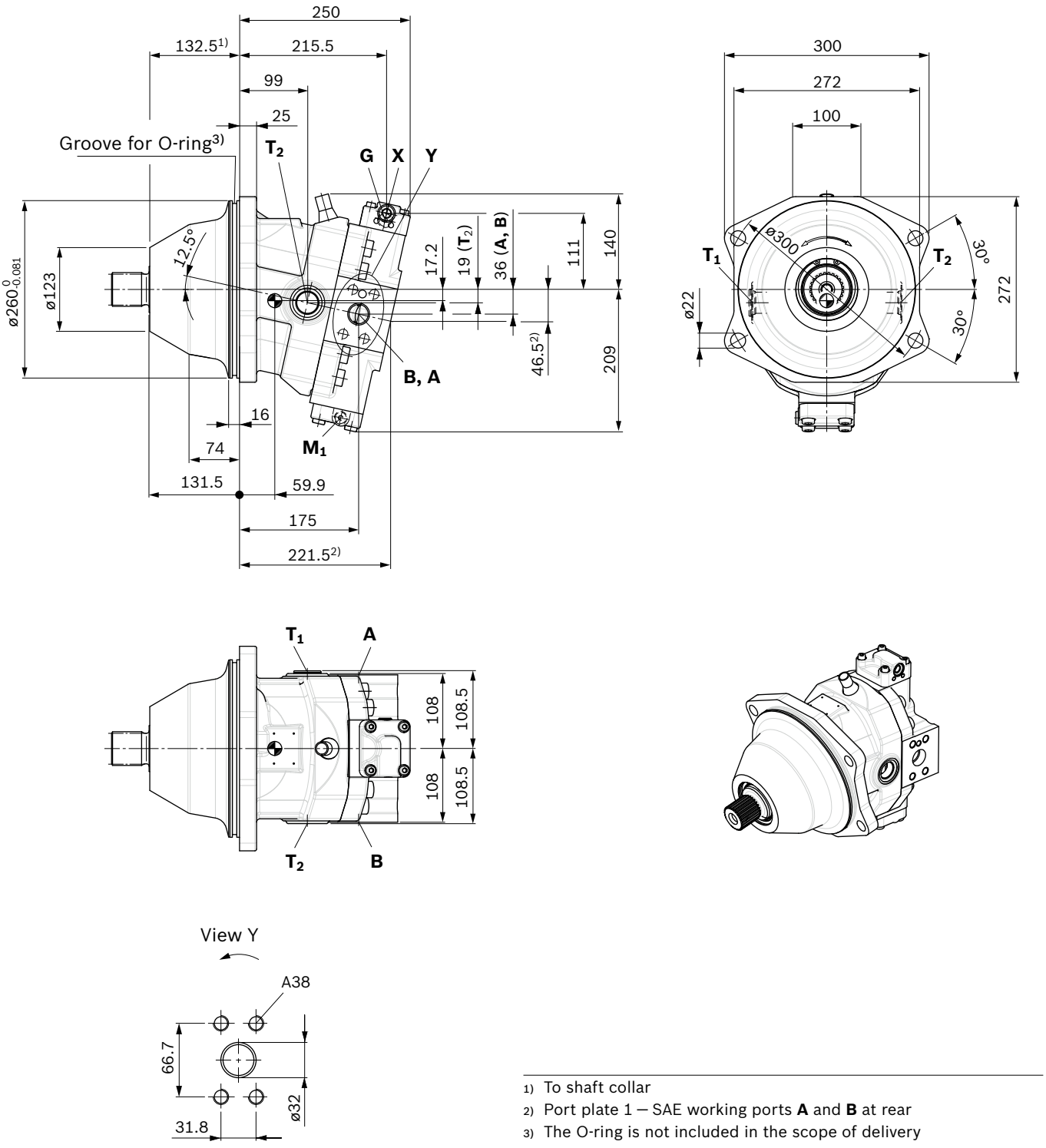

Center of gravity

1) To shaft collar
2) Port plate 1 — SAE working ports **A** and **B** at rear
3) The O-ring is not included in the scope of delivery

Notice

Dimensions of the control devices, see data sheet 91610.

▼ **Location of the working ports on the port plates** (View **Z**)

2 SAE working ports **A** and **B** lateral, opposite

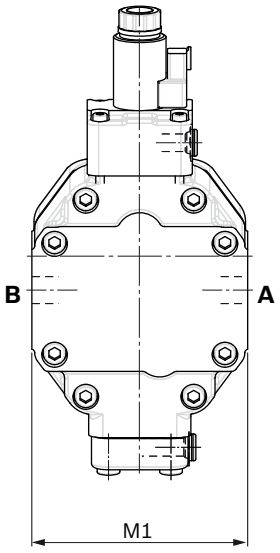

1 SAE working ports **A** and **B** at rear

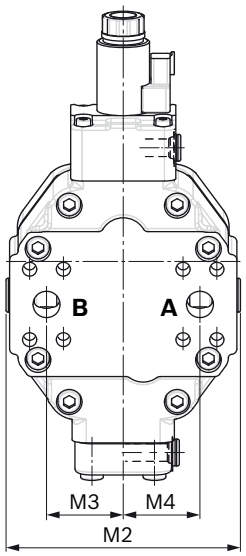

2 SAE working ports **A** and **B** lateral, opposite only HZ7, EZ7/8 (NG60 to 115)

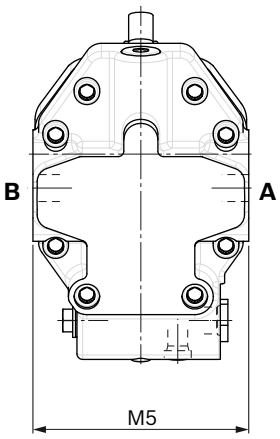

1 SAE working ports **A** and **B** at rear only HZ7, EZ7/8 (NG60 to 115)

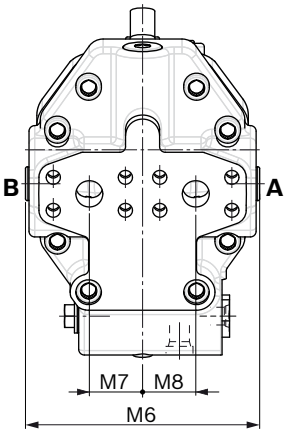

NG	M1	M2	M3	M4	M5	M6	M7	M8
60	152	165	54	54	152	165	37.5	37.5
85	164	177	54	54	164	177	42	42
115	180	193	65	65	180	193	42	42
170	204	226	76	76	–	–	–	–
215	216	235	82	82	–	–	–	–

NG	Ports A, B		T_1, T_2	G	**X** (HA1, HA2)	**X** (HP, HZ, HA1T/2T)	M_1	
60	3/4 in	M10 x 1.5; 17 deep	M22 × 1.5; 15.5 deep	M14 x 1.5; 11.5 deep	M14 x 1.5; 11.5 deep	M14 x 1.5; 11.5 deep		–
85	1 in	M12 × 1.75; 17 deep	M22 × 1.5; 15.5 deep	M14 x 1.5; 11.5 deep	M14 x 1.5; 11.5 deep	M14 x 1.5; 11.5 deep		–
115	1 in	M12 × 1.75; 17 deep	M22 × 1.5; 15.5 deep	M14 x 1.5; 11.5 deep	M14 x 1.5; 11.5 deep	M14 x 1.5; 11.5 deep		–
170	1 1/4 in	M14 x 2; 19 deep	M27 x 2; 19 deep	M14 x 1.5; 11.5 deep	M14 x 1.5; 11.5 deep	M14 x 1.5; 11.5 deep	M14 x 1.5; 11.5 deep	
215	1 1/4 in	M14 x 2; 19 deep	M33 × 2; 19 deep	M14 x 1.5; 11.5 deep	M14 x 1.5; 11.5 deep	M14 x 1.5; 11.5 deep	M14 x 1.5; 11.5 deep	

Ports		Standard	$p_{max\ abs}$ [bar][1]	State[5]
A, B	Working port Fastening thread	SAE J518 DIN 13[2]	500	O
T_1, T_2	Drain port	ISO 6149[4]	3	X/O (T_2)[3]
G	Synchronous control	ISO 6149[4]	500	X
X (HA1, HA2)	Pilot signal	ISO 6149[4]	3	X
X (HP, HZ, HA1T/2T)	Pilot signal	ISO 6149[4]	100	O
M_1	Stroking chamber measurement	ISO 6149[4]	500	X

1) Depending on the application, momentary pressure peaks can occur. Keep this in mind when selecting measuring devices and fittings.
2) Only dimensions according to SAE J518, metric fastening thread is a deviation from the standard
3) Depending on installation position, T_1 or T_2 must be connected (see also installation instructions on page 38).
4) The countersink can be deeper than as specified in the standard.
5) O = Must be connected (plugged when delivered)
X = Plugged (in normal operation)

Connector for solenoids

DEUTSCH DT04-2P-EP04

Molded connector, 2-pin, without bidirectional suppressor diode

The following type of protection ensues with the installed mating connector:

- IP67 (DIN/EN 60529) and
- IP69K (DIN 40050-9)

▼ **Circuit symbol**

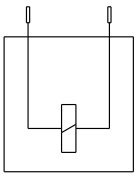

▼ **Mating connector DEUTSCH DT06-2S-EP04**

Consisting of	DT designation
1 housing	DT06-2S-EP04
1 wedge	W2S
2 sockets	0462-201-16141

The mating connector is not included in the scope of delivery. This can be supplied by Bosch Rexroth on request (material number R902601804).

Notice

- If necessary, you can change the position of the connector by turning the solenoid.
- The procedure is defined in the instruction manual.

Flushing and boost-pressure valve

The flushing and boost-pressure valve is used to remove heat from the hydraulic circuit.
In a closed circuit, it is used for flushing the case and safeguarding the minimum boost pressure.
Hydraulic fluid is directed from the respective low pressure side into the motor housing. This is then fed into the reservoir, together with the leakage. In the closed circuit, the removed hydraulic fluid must be replaced by cooled hydraulic fluid supplied by the boost pump.
The valve is mounted on the port plate or integrated (depending on the control type and size).

Cracking pressure of pressure retaining valve
(observe when setting the primary valve)

- Size 60 to 215, fixed setting 16 bar

Switching pressure of flushing spool Δp

- Size 60 to 115 (small flushing valve) 8 ± 1 bar
- Sizes 115 to 215 (medium and large flushing valve) 17.5 ± 1.5 bar

Flushing flow q_v
Orifices can be used to adjust the flushing flows as required. The following parameters are based on:
$\Delta p_{ND} = p_{ND} - p_G$ = 25 bar and ν = 10 mm²/s (p_{ND} = low pressure, p_G = case pressure)

Small flushing valve for sizes 60 to 115

Material number of orifice	ø [mm]	q_v [l/min]	Code
R909651766	1.2	3.5	A
R909419695	1.4	5	B
R909419696	1.8	8	C
R909419697	2.0	10	D
R909444361	2.4	14	F

Medium flushing valve for size 115

Material number of orifice	ø [mm]	q_v [l/min]	Code
R909431310	2.8	18	I
R902138235	3.1	21	J
R909435172	3.5	27	K
R909449967	5.0	31	L

Large flushing valve for sizes 170 to 215

Material number of orifice	ø [mm]	q_v [l/min]	Code
R909449998	1.8	8	C
R909431308	2.0	10	D
R909431309	2.5	15	G
R909431310	2.8	18	I
R902138235	3.1	21	J
R909435172	3.5	27	K
R909436622	4.0	31	L
R909449967	5.0	37	M

▼ **Circuit diagram EP**

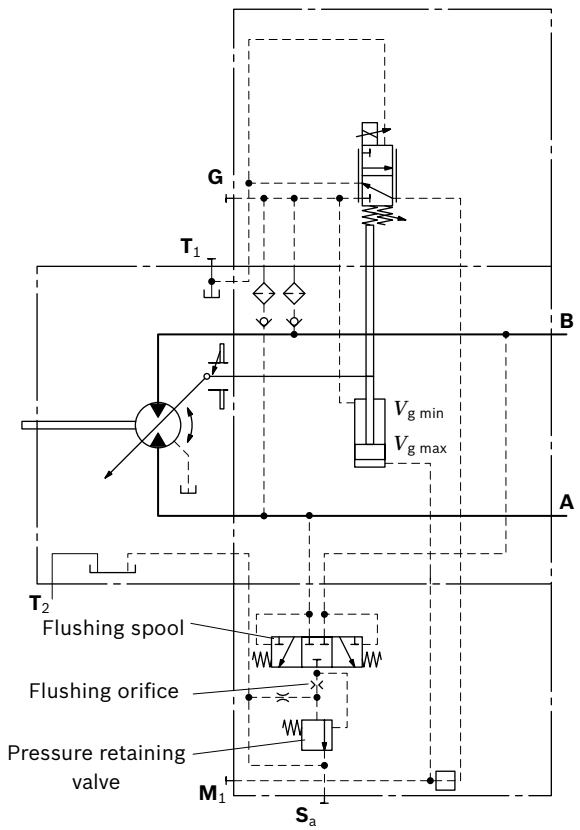

Notice

- Port **S_a** only for sizes 170 and 215
- For a flushing flow of 35 l/min, it is recommended that port **S_a** be connected in order to prevent an increase in case pressure. An increased case pressure reduces the flushing flow.

Connector for solenoids

▼ **Dimensions of sizes 60 to 115 (small flushing valve)**

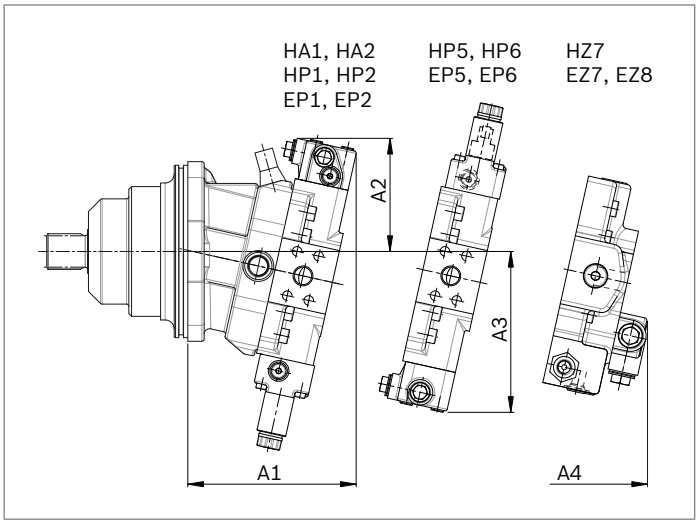

NG	A1	A2	A3	A4
060	183	137	183	176
085	195	142	194	176
115	204	143	202	186

▼ **Dimensions of size 115 (medium flushing valve)**

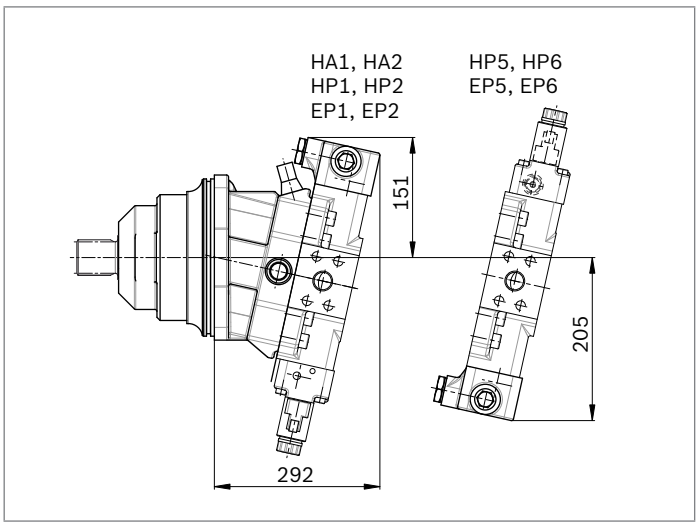

▼ **Dimensions of sizes 170 and 215 (large flushing valve)**

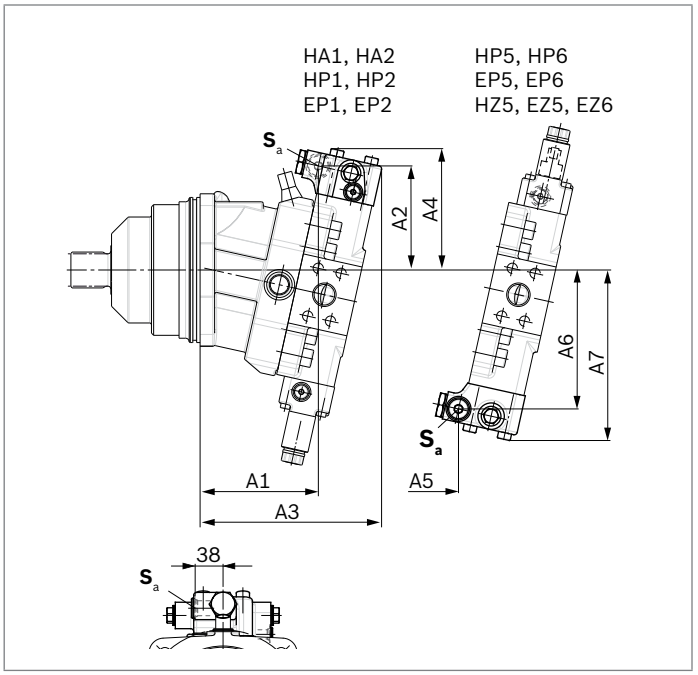

NG	A1	A2	A3	A4	A5	A6	A7	S_a[1)]
170	163	142	249	165	89	190	233	M22 × 1.5; 15.5 deep
215	170	148	256	172	93	201	244	M22 × 1.5; 15.5 deep

1) ISO 6149, ports plugged (in normal operation). For notes on tightening torques, see instruction manual.
The countersink can be deeper than as specified in the standard.

BVD and BVE counterbalance valves

Function

Counterbalance valves for travel drives and winches should reduce the danger of overspeed and cavitation in open circuits of axial piston motors. Cavitation occurs if, during braking, when going downhill or during the load-lowering process, the motor speed is greater than it should be for the given inlet flow and thus the supply pressure collapses. If the supply pressure falls below the value specified for the relevant counterbalance valve, the counterbalance spool moves into the closed position. The cross-sectional area of the counterbalance valve return duct is then reduced, creating a bottleneck in the return flow of the hydraulic fluid. The pressure increases and brakes the motor until the rotational speed of the motor reaches the specified value for the given inlet flow.

Notice

- BVD available for sizes 60 to 215 and BVE available for sizes 115 to 215.
- The counterbalance valve must be ordered additionally. We recommend ordering the counterbalance valve and the motor as a set.
  Order example: A6VE085HA1T30004A/71MWV0Y2Z 97W0-0 + BVD20F27S/41B–V03K16D0400S12
- For safety reasons, controls with beginning of control at $V_{g\ min}$ (e.g. HA) are not permissible for winch drives!
- Counterbalance valves must be optimized during prototype commissioning to prevent unacceptable operating conditions and compliance with the specification must be verified.
- The counterbalance valve does not replace the mechanical service brake and holding brake.
- Observe the detailed notes on the BVD counterbalance valve in RE 95522 and BVE counterbalance valve in RE 95525.
- For the design of the brake release valve, we require the following data for the mechanical holding brake:
  - the cracking pressure
  - the volume of the counterbalance spool between minimum stroke (brake closed) and maximum stroke (brake released with 21 bar)
  - the required closing time for a warm device (oil viscosity approx. 15 mm2/s)

3

Permissible inlet flow or pressure when using pressure relief valve and BVD/BVE

Motor	Without valve		Limited values when using pressure relief valve and BVD/BVE							
			DBV[1]				BVD[2]/BVE[3]			
NG	p_{nom}/p_{max} [bar]	$q_{V\ max}$ [l/min]	NG	p_{nom}/p_{max} [bar]	q_V [l/min]	Code	NG	p_{nom}/p_{max} [bar]	q_V [l/min]	Code
60	450 /500	276	22	350 /420	240	7	20(BVD)	350 /420	220	7W
85		332								
115		410	32		400					
115		410				8	25 (BVD/BVE)		320	8W
170		533								
215		628	On request							

Mounting of the counterbalance valve

When delivered, the counterbalance valve is fastened to the motor with two tacking screws (transport lock). The tacking screws may not be removed while mounting the working lines! If the counterbalance valve and motor are delivered separately, the counterbalance valve must first be fastened to the motor port plate using the provided tacking screws.

The counterbalance valve is finally mounted to the motor by fitting the SAE flange
The screws to be used and the instructions for mounting can be found in the instruction manual.

1) Pressure relief valve
2) Counterbalance valve, dual action
3) Counterbalance valve, single action

Counterbalance valve for travel drive BVD...F

Application option

- Travel drives for wheeled excavators (BVD and BVE)

▼ **Example circuit diagram for travel drive on wheeled excavators**

A6VE085HA1T30004A/71MWV0Y2Z97W0-0 + BVD20F27S/41B–V03K16D0400S12

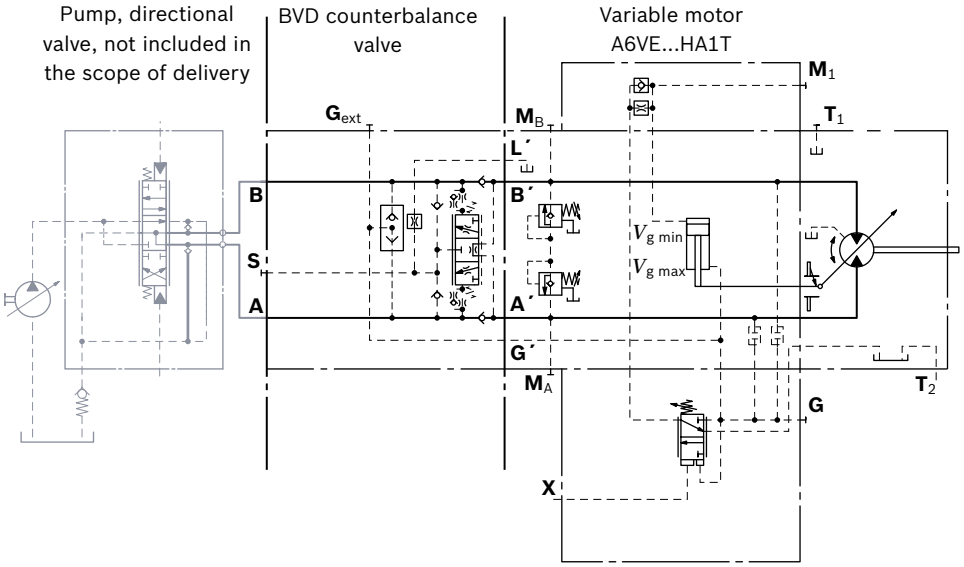

Counterbalance valve for winches and track drives BVD...W and BVE

Application option

- Winch drives for cranes (BVD and BVE)
- Track drives for tracked excavators (BVD)

▼ **Example circuit diagram for winch drive in cranes**

A6VE085HP5D10001A/71MWV0Y2Z97W0-0 + BVE25W38S/51ND-V100K00D4599T30S00-0

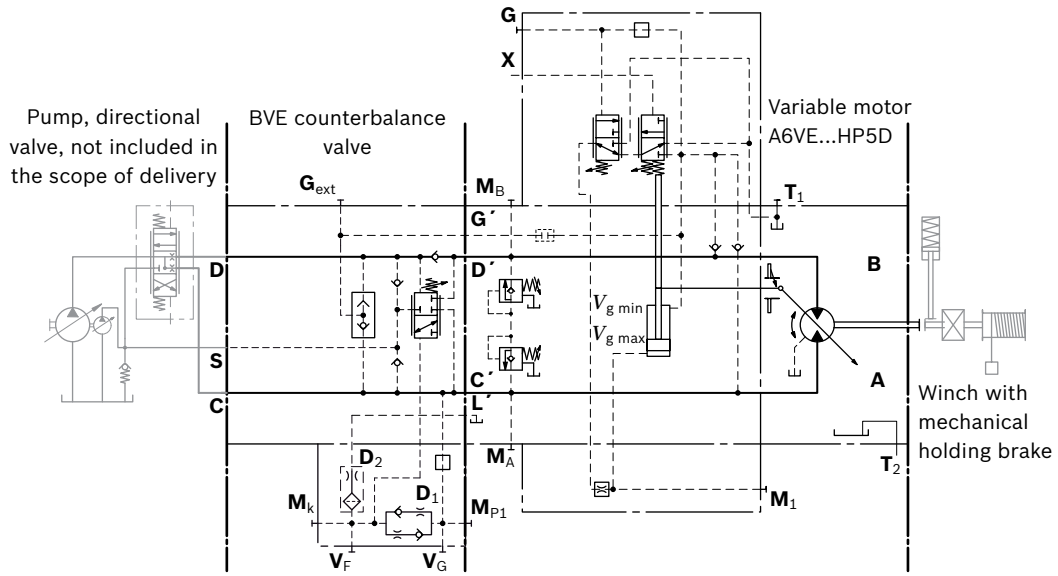

Dimensions of counterbalance valve

▼ **A6VE...HA, HP1, HP2 and EP1, EP2**

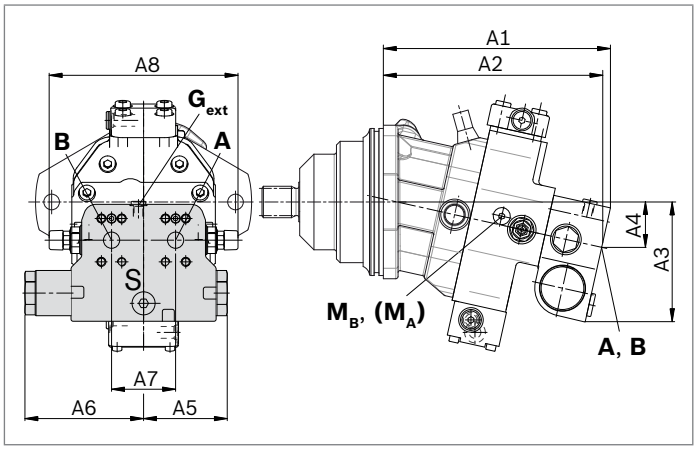

▼ **A6VE...HP5, HP6 and EP5, EP6[1)]**

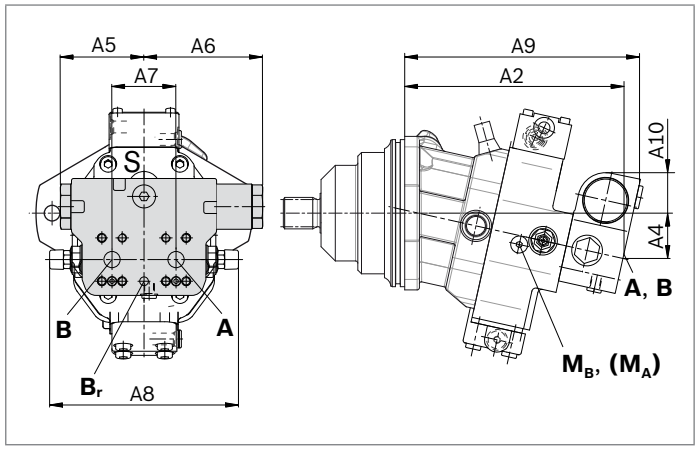

A6VE	Counterbalance valve											
NG...plate	Type	Ports	Dimensions									
		A, B	A1	A2	A3	A4	A5	A6	A7	A8	A9	A10
60...7	BVD20...17	3/4 in	252	243	143	50	98	139	75	222	267	50
85...7	BVD20...27	1 in	261	252	148	55	98	139	75	222	276	46
115...7	BVD20...28	1 in	280	271	152	59	98	139	84	234	295	41
115...8	BVD25...38	1 1/4 in	298	288	165	63	120.5	175	84	238	311	56
170...8	BVD25...38	1 1/4 in	334	324	170	68	120.5	175	84	238	349	51
115...8	BVE25...38	1 1/4 in	298	288	171	63	137	214	84	238	315	63
170...8	BVE25...38	1 1/4 in	334	325	176	68	137	214	84	238	349	59
215...8	BVD25...38	1 1/4 in	356	346	176	74	120.5	175	84	299	370	46
215...8	BVE25...38	1 1/4 in	356	346	182	74	137	214	84	299	370	52

Ports		Version	A6VE plate	Standard	Size	$P_{max\ abs}$ [bar][2)]	State[4)]
A, **B**	Working line			SAE J518	see table above	420	O
S	Infeed	BVD20		DIN 3852[3)]	M22 × 1.5; 14 deep	30	X
		BVD25, BVE25		DIN 3852[3)]	M27 x 2; 16 deep	30	X
Br	Brake release, reduced high pressure	L	7	DIN 3852[3)]	M12 × 1.5; 12.5 deep	30	O
			8	DIN 3852[3)]	M12 × 1.5; 12 deep	30	O
G_{ext}	Brake release, high pressure	S		DIN 3852[3)]	M12 × 1.5; 12.5 deep	420	X
M_A, M_B	Pressure measurement A and B			ISO 6149[3)]	M18 x 1.5; 14.5 deep	420	X

1) At the mounting version for the controls HP5, HP6 and EP5, EP6, the cast-in port designation **A** and **B** on the BVD/BVE counterbalance valve do not correspond with the connection designation of the A6VE motor.
The designation of the ports on the installation drawing of the motor is binding!

2) Depending on the application, momentary pressure peaks can occur. Keep this in mind when selecting measuring devices and fittings.

3) The countersink can be deeper than as specified in the standard.

4) O = Must be connected (plugged when delivered)
X = Plugged (in normal operation)

Integrated BVI counterbalance valve

Function

The integrated counterbalance valves for track drives in excavator crawlers should reduce the danger of overspeed and cavitation of axial piston motors in open circuits. Cavitation occurs if, during braking or driving downhill, the rotational speed of the motor is greater than it should be for the given inlet flow, causing the supply pressure to fall sharply.

If the supply pressure falls below the value specified for the relevant counterbalance valve, the counterbalance spool moves into the closed position. The cross-sectional area of the counterbalance valve return duct is then reduced, creating a bottleneck in the return flow of the hydraulic fluid. The pressure increases and brakes the motor until the rotational speed of the motor reaches the specified value for the given inlet flow.

Notice

- BVI available for sizes 115 and 170.
- The counterbalance valve must be ordered additionally. Order example: A6VE115HA3T30004A/71MWV0Y2Z 96Y0-0 + BVI510008001-0
- Counterbalance valves must be optimized during prototype commissioning to prevent unacceptable operating conditions and compliance with the specification must be verified.
- The counterbalance valve does not replace the mechanical service brake and holding brake.
- For the design of the brake release valve, we require the following data for the mechanical holding brake:
  - the cracking pressure
  - the volume of the counterbalance spool between minimum stroke (brake closed) and maximum stroke (brake released with 21 bar)
  - the required closing time for a warm device (oil viscosity approx. 15 mm^2/s)

Type code

01	02	03	04	05		06
BVI					**–**	

Counterbalance valve

01	Counterbalance valve integrated	**BVI**

Brake piston version		q_v **[l/min]**	**Material number**	
02	Volume preselection	≤ 150	R902038832	**51**
		= 150 – 210	R902038936	**52**
		= 210 – 270	R902038833	**53**
		= 270 – 330	R902038834	**54**
		= 330 – 400	R902038835	**55**
		≥ 400	R902038836	**56**

Throttle mounting

03	Constant throttle	R909432302	**0008**
	Throttle pin	R909651165	**0603**

Check valve

04	Without residual opening	**00**

Brake release valve

05	With brake release valve (standard HZ)	without disable function	**1**
	With brake release valve (standard HA)	with disable function	**2**

Standard / special version

06	Standard version	**0**
	Special version	**S**

Technical data

Working pressure	Nominal pressure	p	350 bar
	Maximum pressure	p	420 bar
Volume flow, maximum		$q_{v\,max}$	400 l/min
Counterbalance spool	Start of opening	p	12 bar
	Fully open	p	26 bar
Pressure reducing valve for brake release (fixed setting)	Control pressure	p	21^{+4} bar
	Beginning of control	p	10^{+4} bar

Permissible inlet flow or pressure when using pressure relief valve and BVI

Motor NG	No restriction Standard plate (1 + 2)		Limited values Plate with integrated counterbalance valve (6)	
				BVI + DBV
	p_{nom}/p_{max} [bar]	$q_{V\,max}$ [l/min]	p_{nom}/p_{max} [bar]	q_V [l/min]
115	450 /500	410	350 /420	400
170		533		

▼ **Infeed characteristic curve M22 × 1.5**

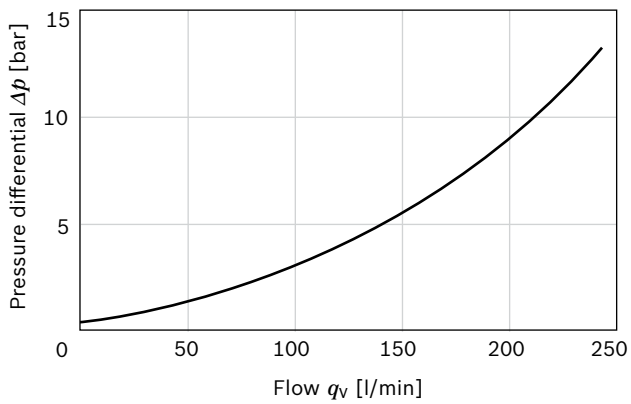

▼ **Infeed characteristic curve M27 × 2**

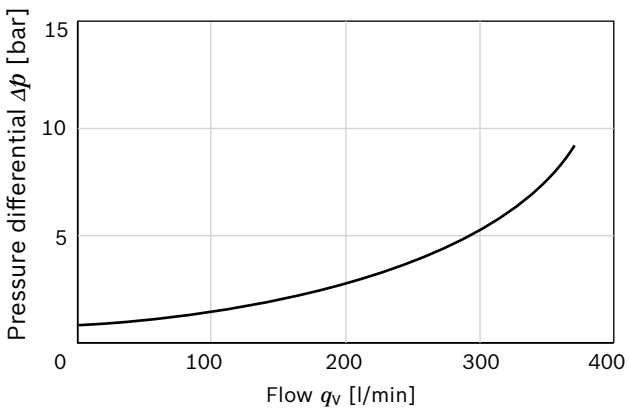

3

▼ **Circuit diagram HZ7**

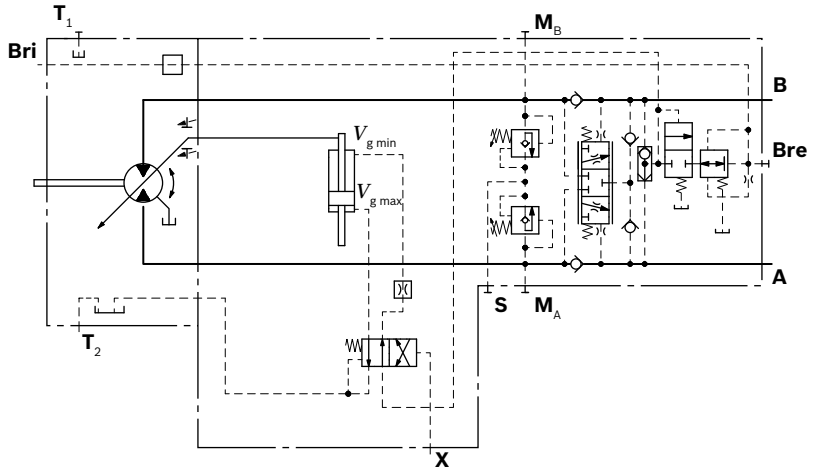

▼ **Circuit diagram HA3**

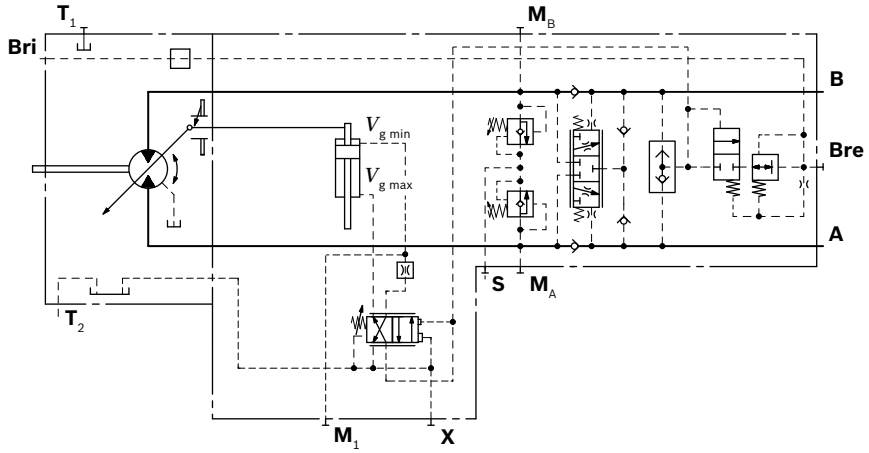

▼ **Circuit diagram HA3T3**

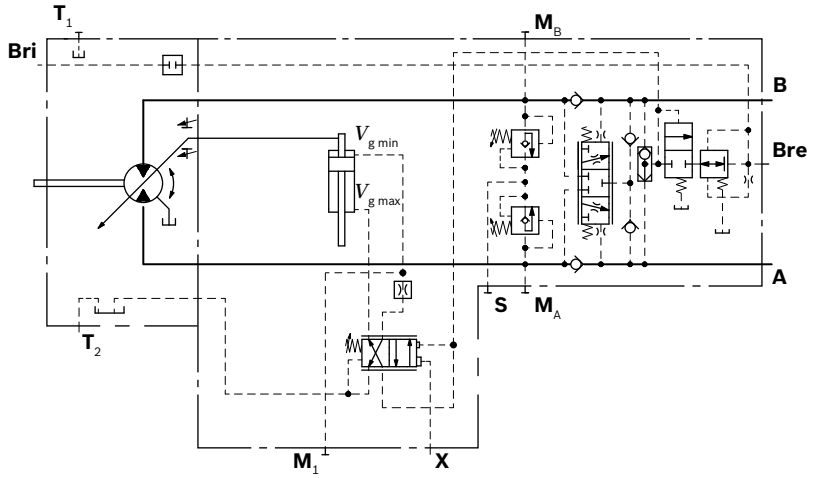

Integrated BVI counterbalance valve dimensions

HZ7 – Two-point control, hydraulic

Port plate 6, with integrated BVI counterbalance valve – SAE working ports **A** and **B** at bottom

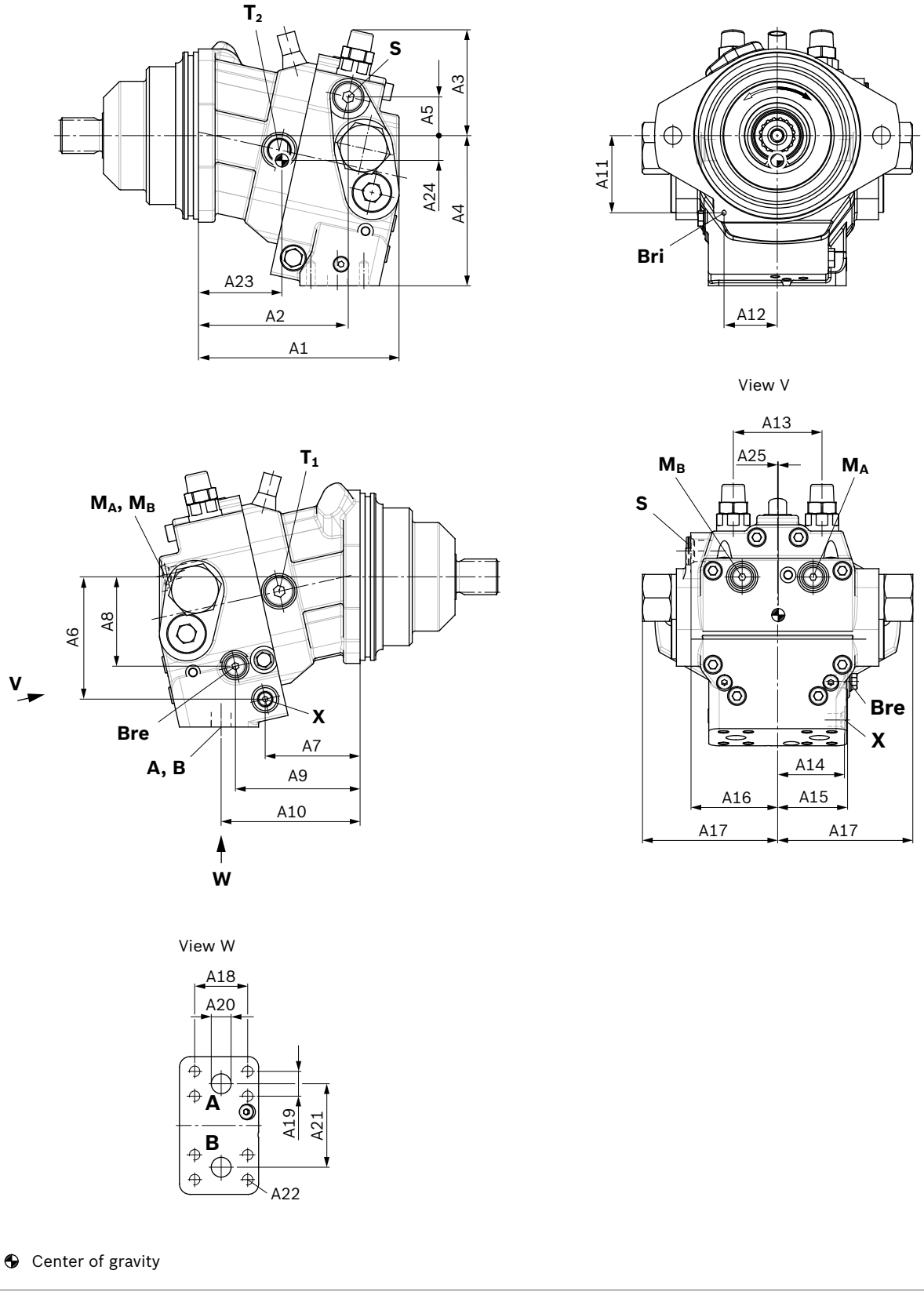

Center of gravity

A6VE NG...plate	Port A, B	Dimensions A1	A2	A3	A4	A5	A6	A7	A8	A9	A10	A11	A12	A13
115...6	1 in	204	161	122	172	40	143	99	98	131	144	96	58	96
170...6	1 1/4 in	240	195	136	197	47	162	128	113	161	177	94	65	108

A6VE NG...plate	Ports A, B	Dimensions A14	A15	A16	A17	A18	øA19	A20	A21	A22 (DIN 13)	A23	A24	A25
115...6	1 in	70	74	85	129.5	57.2	27.8	25	86	M12 × 1.75; 17 deep	68	24.4	0.3
170...6	1 1/4 in	78	85	101.5	129.5	66.7	31.8	32	94	M14 × 2; 19 deep	91.7	28.8	0.5

Port	Working line SAE J518[1]	Reservoir line ISO 6149[4]	Pilot signal	Infeed ISO 6149[4]	Stroking chamber measurement	Stroking chamber measurement
NG	A, B	T_1, T_2	X	S	M_A, M_B	M_1 only for HA3
115	see table above	M22 × 1.5; 15.5 deep	M14 x 1.5; 11.5 deep	M22 × 1.5; 15.5 deep	M14 x 1.5; 11.5 deep	M10 x 1; 10 deep
170		M27 x 2; 19 deep	M14 x 1.5; 11.5 deep	M27 x 2; 19 deep	M14 x 1.5; 11.5 deep	M10 x 1; 10 deep
$p_{max\ abs}$[bar][2]	420	3	100	30	420	420
State[5]	O	X/O (T_2)[3]	O	X	X	X

Port	Brake release, external ISO 6149[4]	Brake release, internal
NG	Bre	Bri
115	M14 x 1.5; 11.5 deep	ø4
170	M14 x 1.5; 11.5 deep	ø4
$p_{max\ abs}$[bar][2]	30	30
State[5]	O/X[6]	X/O[7]

1) Only dimensions according to SAE J518, metric fastening thread is a deviation from the standard
2) Depending on the application, momentary pressure peaks can occur. Keep this in mind when selecting measuring devices and fittings.
3) Depending on installation position, T_1 or T_2 must be connected (see also installation instructions on page 38).
4) The countersink can be deeper than as specified in the standard.
5) O = Must be connected (plugged when delivered)
X = Plugged (in normal operation)
6) Must be connected for external piping. Is plugged for internal channel routing.
7) Is plugged for external channel routing. Must be connected for internal piping.

Speed sensor

The A6VE...U version (“prepared for speed sensor”, i.e. without sensor) is equipped with a spline on the rotary group.
A signal proportional to the rotational speed of the motor can be generated with the mounted DSA speed sensor.
The DSA sensor registers the rotational speed and direction of rotation.
Type code, technical data, dimensions and parameters for the connector, plus safety instructions about the sensor can be found in the relevant data sheet 95133 – DSA. The sensor is mounted on the port provided specially for this with a mounting bolt. On deliveries without sensor, the port is plugged with a pressure-resistant cover.
We recommend ordering the A6VE variable motor complete with mounted sensor.

▼ **Circuit diagram EP**

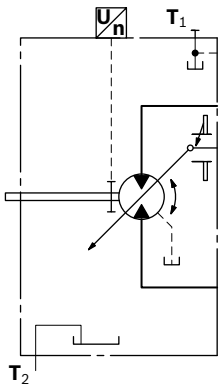

▼ **Dimensions**

Version “V” with mounted speed sensor

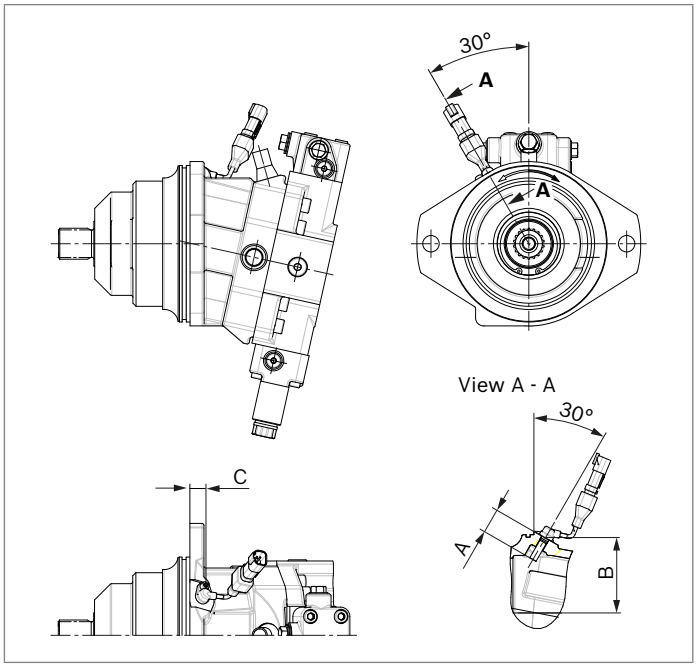

Size		60	85	115	170	215
Number of teeth		54	58	67	75	80
A	Insertion depth (tolerance -0.25)	32	32	32	32	32
B	Contact surface	83.3	87.3	96.3	104.3	109.2
C		26	16.5	14.2	28.5	22.7

Setting range for displacement

	60				85				115			
	$V_{g\,max}$ (cm³/rev)		$V_{g\,min}$ (cm³/rev)		$V_{g\,max}$ (cm³/rev)		$V_{g\,min}$ (cm³/rev)		$V_{g\,max}$ (cm³/rev)		$V_{g\,min}$ (cm³/rev)	
	from	to	from	to	from	to	from	to	from	to	from	to
A	62.0	62.0	0.0	15.0	85.2	85.2	0.0	25.0	115.6	115.6	0.0	24.0
	without screw		M10 × 60 R909154690		without screw		M12 × 70 R909085976		without screw		M12 × 70 R909085976	
B	62.0	62.0	> 15.0	30.5	85.2	85.2	> 25.0	44.0	115.6	115.6	> 24.0	47.5
	without screw		M10 × 70 R909153779		without screw		M12 × 80 R909153075		without screw		M12 × 80 R909153075	
C	62.0	62.0	> 30.5	43.0	85.2	85.2	> 44.0	59.0	115.6	115.6	> 47.5	71.0
	without screw		M10 × 80 R909154058		without screw		M12 × 90 R909154041		without screw		M12 × 90 R909154041	
D	x		x		x		x		115.6	115.6	> 71.0	80.0
									without screw		M12 × 100 R909153975	
E	< 62.0	47.5	0.0	15.0	< 85.2	62.0	0.0	25.0	< 115.6	93.5	0.0	24.0
	M10 × 60 R909154690		M10 × 60 R909154690		M12 × 70 R909085976		M12 × 70 R909085976		M12 × 70 R909085976		M12 × 70 R909085976	
F	< 62.0	47.5	> 15.0	30.5	< 85.2	62.0	< 25.0	44.0	< 115.6	93.5	> 24.0	47.5
	M10 × 60 R909154690		M10 × 70 R909153779		M12 × 70 R909085976		M12 × 80 R909153075		M12 × 70 R909085976		M12 × 80 R909153075	
G	< 62.0	47.5	> 30.5	43.0	< 85.2	62.00	> 44.0	59.0	< 115.6	93.5	> 47.5	71
	M10 × 60 R909154690		M10 × 80 R909154058		M12 × 70 R909085976		M12 × 90 R909154041		M12 × 70 R909085976		M12 × 90 R909154041	
H	x		x		x		x		< 115.6	93.5	> 71.0	80.0
									M12 × 70 R909085976		M12 × 100 R909153975	
J	< 47.5	33.0	0.0	15.0	< 62.0	43.0	0.0	25.0	< 93.5	71.0	0.0	24.0
	M10 × 70 R909153779		M10 × 60 R909154690		M12 × 80 R909153075		M12 × 70 R909085976		M12 × 80 R909153075		M12 × 70 R909085976	
K	< 47.5	33.0	> 15.0	30.5	< 62.0	43.0	> 25.0	44.0	< 93.5	71.0	> 24.0	47.5
	M10 × 70 R909153779		M10 × 70 R909153779		M12 × 80 R909153075		M12 × 80 R909153075		M12 × 80 R909153075		M12 × 80 R909153075	
L	< 47.5	33.0	> 30.5	43.0	< 62.0	43.0	> 44.0	59.0	< 93.5	71.0	> 47.5	71.0
	M10 × 70 R909153779		M10 × 80 R909154058		M12 × 80 R909153075		M12 × 90 R909154041		M12 × 80 R909153075		M12 × 90 R909154041	
M	x		x		x		x		< 93.5	71.0	> 71.0	80.0
									M12 × 80 R909153075		M12 × 100 R909153975	

Specify exact settings for $V_{g\,min}$ and $V_{g\,max}$ in plain text when ordering:

- $V_{g\,min}$ = ... cm³, $V_{g\,max}$ =...cm³

Theoretical, maximum setting:

- for $V_{g\,min}$ = 0.7 × $V_{g\,max}$
- for $V_{g\,max}$ = 0.3 × $V_{g\,max}$

Settings that are not listed in the table may lead to damage.
Please contact us.

	170				215			
	$V_{g\,max}$ (cm³/rev)		$V_{g\,min}$ (cm³/rev)		$V_{g\,max}$ (cm³/rev)		$V_{g\,min}$ (cm³/rev)	
	from	to	from	to	from	to	from	to
A	171.8	171.8	0.0	28.0	216.5	216.5	0.0	44.5
	without screw		M12 × 80 R909153075		without screw		M12 × 80 R909153075	
B	171.8	171.8	> 28.0	56.0	216.5	216.5	> 44.5	80.0
	without screw		M12 × 90 R909154041		without screw		M12 × 90 R909154041	
C	171.8	171.8	> 56.0	91.0	216.5	216.5	> 80.0	115.0
	without screw		M12 × 100 R909153975		without screw		M12 × 100 R909153975	
D	171.8	171.8	> 91.0	118.0	216.5	216.5	> 115.0	150.0
	without screw		M12 × 110 R909154212		without screw		M12 × 110 R909154212	
E	< 171.8	145.0	0.0	28.0	< 216.5	175.0	0.0	44.5
	M12 × 80 R909153075		M12 × 80 R909153075		M12 × 80 R909153075		M12 × 80 R909153075	
F	< 171.8	145.0	> 28.0	56.0	< 216.5	175.0	> 44.5	80.0
	M12 × 80 R909153075		M12 × 90 R909154041		M12 × 80 R909153075		M12 × 90 R909154041	
G	< 171.8	145.0	> 56.0	91.0	< 216.5	175.0	> 80.0	115.0
	M12 × 80 R909153075		M12 × 100 R909153975		M12 × 80 R909153075		M12 × 100 R909153975	
H	< 171.8	145.0	> 91.0	118.0	< 216.5	175.0	> 115.0	150.0
	M12 × 80 R909153075		M12 × 110 R909154212		M12 × 80 R909153075		M12 × 110 R909154212	
J	< 145.0	118.0	0.0	28.0	< 175.0	141.0	0.0	44.5
	M12 × 90 R909154041		M12 x 80 R909153075		M12 × 90 R909154041		M12 x 80 R909153075	
K	< 145.0	118.0	> 28.0	56.0	< 175.0	141.0	> 44.5	80.0
	M12 x 90 R909154041		M12 × 90 R909154041		M12 x 90 R909154041		M12 × 90 R909154041	
L	< 145.0	118.0	> 56.0	91.0	< 175.0	141.0	> 80.0	115.0
	M12 × 90 R909154041		M12 × 100 R909153975		M12 × 90 R909154041		M12 × 100 R909153975	
M	< 145.0	118.0	> 91.0	118.0	< 175.0	141.0	> 115.0	150.0
	M12 × 90 R909154041		M12 × 110 R909154212		M12 × 90 R909154041		M12 × 110 R909154212	

Specify exact settings for $V_{g\,min}$ and $V_{g\,max}$ in plain text when ordering:

- $V_{g\,min}$ = ... cm³, $V_{g\,max}$ =...cm³

Theoretical, maximum setting:

- for $V_{g\,min}$ = 0.7 × $V_{g\,max}$
- for $V_{g\,max}$ = 0.3 × $V_{g\,max}$

Settings that are not listed in the table may lead to damage.
Please contact us.

Installation instructions

General

The axial piston unit must be filled with hydraulic fluid and air bled during commissioning and operation. This must also be observed following a longer standstill as the axial piston unit may empty via the hydraulic lines.
The leakage in the housing area must be directed to the reservoir via the highest drain port (**T_1**, **T_2**).
For combinations of multiple units, make sure that the respective case pressure in each unit is not exceeded. In the event of pressure differences at the drain ports of the units, the shared drain line must be changed so that the maximum permissible case pressure of all connected units is not exceeded at any operational conditions. If this is not possible, separate drain lines must be laid.
To achieve favorable noise values, decouple all connecting lines using elastic elements and avoid above-reservoir installation.
In all operating conditions, the drain line must flow into the reservoir below the minimum fluid level.

Notice

In certain installation positions, an influence on the control or closed loop control can be expected. Gravity, dead weight and case pressure can cause minor characteristic shifts and changes in response time.

Key	
F	Filling / air bleeding
T_1, T_2	Drain port
$h_{t\ min}$	Minimum required immersion depth (200 mm)
h_{min}	Minimum required distance to reservoir bottom (100 mm)

Installation position

See the following examples **1** to **6**.
Further installation positions are available upon request.
Recommended installation position: **1** and **2**

Below-reservoir installation (standard)

Below-reservoir installation means that the axial piston unit is installed outside of the reservoir and below the minimum fluid level of the reservoir.

Installation position	Air bleed	Filling
1 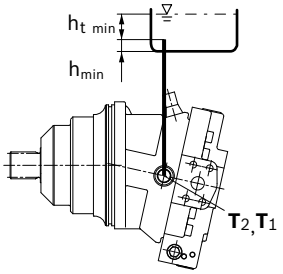		**T_2, T_1**
2 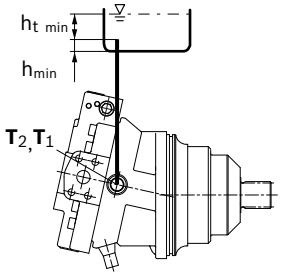		**T_2, T_1**
3 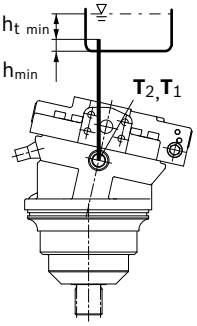		**T_2, T_1**

Above-reservoir installation

Above-reservoir installation means that the axial piston unit is installed above the minimum fluid level of the reservoir.

Installation position	Air bleed	Filling
4 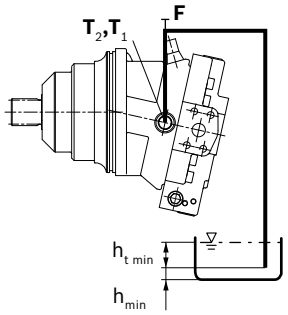	F	T2, T1 (F)
5 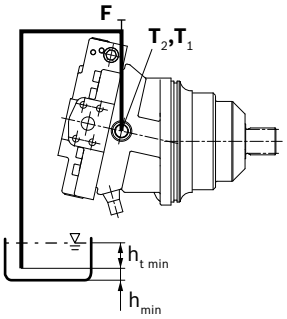	F	T2, T1 (F)
6 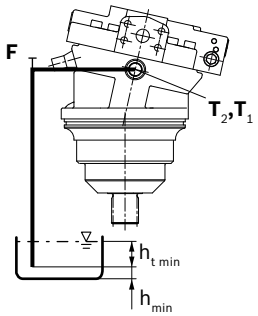	F	T2, T1 (F)

Notice

Port **F** is part of the external piping and must be provided on the customer side to make filling and air bleeding easier.

Project planning notes

- The motor A6VE is designed to be used in open and closed circuits.
- The project planning, installation and commissioning of the axial piston unit requires the involvement of qualified skilled personnel.
- Before using the axial piston unit, please read the corresponding instruction manual completely and thoroughly. If necessary, these can be requested from Bosch Rexroth.
- Before finalizing your design, please request a binding installation drawing.
- The specified data and notes contained herein must be observed.
- For safety reasons, controls with beginning of control at $V_{g\,min}$ (e.g. HA) are not permissible for winch drives, e.g. anchor winches.
- Depending on the operating conditions of the axial piston unit (working pressure, fluid temperature), the characteristic curve may shift.
- Preservation: Our axial piston units are supplied as standard with preservative protection for a maximum of 12 months. If longer preservative protection is required (maximum 24 months), please specify this in plain text when placing your order. The preservation periods apply under optimal storage conditions, details of which can be found in the data sheet 90312 or the instruction manual.
- Not all versions of the product are approved for use in a safety function according to ISO 13849. Please consult the responsible contact person at Bosch Rexroth if you require reliability parameters (e.g. $MTTF_d$) for functional safety.
- Depending on the type of control used, electromagnetic effects can be produced when using solenoids. When a direct current is applied, solenoids do not cause electromagnetic interference nor is their operation impaired by electromagnetic interference.
  Other behavior can result when a modulated direct current (e.g. PWM signal) is applied. Potential electromagnetic interference for persons (e.g. persons with a pacemaker) and other components must be tested by the machine manufacturer.
- Please note the details regarding the tightening torques of port threads and other threaded joints in the instruction manual.
- Working ports:
  - The ports and fastening threads are designed for the specified maximum pressure. The machine or system manufacturer must ensure that the connecting elements and lines correspond to the specified application conditions (pressure, flow, hydraulic fluid, temperature) with the necessary safety factors.
  - The working ports and function ports are only intended to accommodate hydraulic lines.

Safety instructions

- During and shortly after operation, there is a risk of getting burnt on the axial piston unit and especially on the solenoids. Take appropriate safety measures (e.g. by wearing protective clothing).
- Moving parts in control equipment (e.g. valve pistons) can, under certain circumstances get stuck in position as a result of contamination (e.g. impure hydraulic fluid, abrasion, or residual dirt from components). As a result, the hydraulic fluid flow and the build-up of torque in the axial piston unit can no longer respond correctly to the operator's specifications. Even the use of various filter elements (external or internal flow filter) will not rule out a fault but merely reduce the risk.
  The machine/system manufacturer must test whether remedial measures are needed on the machine for the application concerned in order to set the consumer being driven to a safe position (e.g. safe stop) and if necessary to ensure it is properly implemented.
- Moving parts in high-pressure relief valves may in certain circumstances become stuck in an undefined position due to contamination (e.g. contaminated hydraulic fluid). This can result in restriction or loss of the load holding function in lifting winches.
  The machine/system manufacturer must check whether additional measures are required on the machine for the relevant application in order to keep the load in a safe position and ensure they are properly implemented.
- When using the axial piston motor in winch drives, make certain that the technical limit values are not exceeded under all operating conditions. If the axial piston motor is extremely overloaded (e.g. if the maximum permissible rotational speeds are exceeded during weighing of the anchor while the ship is in motion), the rotary group may be damaged and, in the worst case, the axial piston motor may burst. The machine manufacturer / system manufacturer is to undertake additional measures, up to and including encapsulation.

Axial piston variable motor A10VM
Plug-in version A10VE

Data sheet

A10VM

A10VE

Series 52
Size 28 to 85
Nominal pressure 280 bar
Maximum pressure 350 bar
Open and closed circuit

Contents

Features	1
Ordering code for standard program	2
Technical data	4
Two-point direct control DG	7
Two-point control, hydraulically operated HZ/HZ6	8
Two-point control, electrically operated EZ	9
Dimensions size A10VM 28 to 85	10
Dimensions size A10VE 28 to 63	18
Integrated flushing and boost press. relief valve, N007	24
Connector for solenoids	25
Speed pickup	26
Mounting position	27
General instructions	28

Features

- Dual displacement motor, axial piston swashplate design, for hydrostatic transmissions in open and closed circuits
- Output speed is directly proportional to inlet flow and inversely proportional to motor displacement
- Output torque increases proportional to the pressure difference between high and low pressure sides and increasing displacement
- Heavy duty bearings for long service life
- High permissible output speed
- Well proven A10-rotary unit technology
- High power/weight ratio – compact dimensions
- Cost effective
- Low noise
- External control pressure supply possible
- Minimum displacement can be set externally
- SAE-2-bolt mounting flange on A10VM
- Special 2-bolt mounting flange on A10VE

Ordering code for standard program

A10V	M			/	52	W		–	V		C				
01	02	03	04		05	06	07		08	09	10	11	12	13	14

Axial piston unit

01	Swash plate design, variable, nominal pressure 280 bar, maximum pressure 350 bar	**A10V**

Operating Mode

02	Motor, open and closed circuit	**M**

Size (NG)

03	Displacement $V_{g\,max}$ in cm^3	**028**	**045**	**063**	**085**	

Control devices

				028	045	063	085	
04	Two point control	Directly operated, external control supply, without pilot valve		●	●	●	●	**DG**
		Hydraulically operated	Stroking time orifice without	●	●	●	❍	**HZ**
			Stroking time orifice with	●	●	●	❍	**HZ6**
		Electricaly with solenoid valve control voltage **12V**	Stroking time orifice without	●	●	●	●	**EZ1**
			Stroking time orifice with	●	●	●	●	**EZ6**
		Electricaly with solenoid valve control voltage **24V**	Stroking time orifice without	●	●	●	❍	**EZ2**
			Stroking time orifice with	●	●	●	❍	**EZ7**

Series

05	Series 5, Index 2	**52**

Direction of rotation

06	Viewed on shaft end	Bi-directional	**W**

Minimum displacement

			028	045	063	085	
07	$V_{g\,min}$ (in cm^3) steplessly adjustable	from/to	8/28	12/25	16/38	22/50	**1**
	Adjustment state in clear text	from/to	–	26/45	40/62	48/85	**2**

Seals

08	FKM (flour-rubber)	**V**

Drive shaft

		028	045	063	085	
09	Splined shaft, ANSI B92.1a-1976, for higher drive torque	●	●	●	●	**R**
	Splined shaft, ANSI B92.1a-1976, for reduced drive torque	–	●	●	●	**W**

Mounting flange

10	SAE J744 2-bolt	**C**

Ports for service lines

11	SAE flanges , at side-same side, metric fixing screws	●	●	●	●	**10N00**
	SAE flanges at rear, metric fixing screws	❍	●	❍	❍	**11N00**
	Threaded ports on side, same side, metric thread	●	●	●	❍	**16N00**

Valves

12	Without valves	●	●	●	●	**0**
	Integrated flushing valve, only with side ports (10N00 and 16N00)	●	●	●	●	**7**

Speed pickup

13	Without speed pickup	●	●	●	●	**–**
	Prepared for inductive type of speed pickup ID R	●	●	●	❍	**D**

Connector for solenoids

14	HIRSCHMANN - connector – without suppressor diod	▲	▲	▲	▲	**H**
	DEUTSCH - connector, molded, 2-pin – without suppressor diod	●	●	●	●	**P**

● = available ❍ = in preparation – = not available ▲ = not for new projects

Ordering code for standard program

A10V	E			/	52	W		–	V		F				
01	02	03	04		05	06	07		08	09	10	11	12	13	14

Axial piston unit

01	Swash plate design, variable, nominal pressure 280 bar, maximum pressure 350 bar	**A10V**

Operating mode

02	Motor, plug in type, open and closed circuit	**E**

Size (NG)

03	Displacement $V_{g\,max}$ in cm³	**028**	**045**	**063**

Control devices

				028	045	063	
04	Two point control	Directly operated, external control supply, without pilot valve		●	●	❍	**DG**
		Hydraulically	Stroking time orifice without	●	●	●	**HZ**
			Stroking time orifice with	●	●	●	**HZ6**
		Electricaly with solenoid valve control voltage **12V**	Stroking time orifice without	●	●	●	**EZ1**
			Stroking time orifice with	●	●	●	**EZ6**
		Electricaly with solenoid valve control voltage **24V**	Stroking time orifice without	●	●	●	**EZ2**
			Stroking time orifice with	●	●	●	**EZ7**

Series

05	Series 5, Index 2	**52**

Direction of rotation

06	Viewed on shaft end	Bi-directional	**W**

Minimum displacement

			028	045	063	
07	$V_{g\,min}$ (in cm³) stepples adjustable	from/to	10/28	12/25	16/38	**1**
	Adjustment please state in clear text	from/to	–	26/45	40/62	**2**

Seals

08	FKM (flour-rubber)	**V**

Drive shaft

		028	045	063	
09	Splined shaft, ANSI B92.1a-1976, for higher drive torque	●	●	●	**R**
	Splined shaft, ANSI B92.1a-1976, for reduced drive torque	–	●	●	**W**

Mounting flange

10	Special 2-bolt	**F**

Ports for service line

11	SAE flanges at side-same side, metric fixing screws	●	●	●	**10N00**
	SAE flanges at rear, metric fixing screws	❍	●	❍	**11N00**
	Threaded ports on side , same side, metric thread	●	●	●	**16N00**

Valves

12	Without valves	●	●	●	**0**
	Integrated flushing valve, only with side ports (10N00 and 16N00)	●	●	●	**7**

Speed pickup

13	Without speed pickup	●	●	●	**–**
	Prepared for inductive type of speed pickup ID R	❍	●	❍	**D**

Connector for solenoids

14	HIRSCHMANN - connector – without suppressor diod	▲	▲	▲	**H**
	DEUTSCH - connector, molded, 2-pin – without suppressor diod	●	●	●	**P**

● = available ❍ = in preparation – = not available ▲ = not for new projects

Technical data

Fluid

Prior to project design please see our data sheets RE 90220 (mineral oil), RE 90221 (ecologically acceptable fluids) and RE90223 (HF-fluids) for detailed information on fluids and application conditions.

When operating on ecologically acceptable fluids, limitations to the techical data may be necessary.

Please contact us and state the fluid used in clear text when ordering.

Operating viscosity range

For optimum efficiency and service life we recommend an operating viscosity (at operating temperature) in the range

ν_{opt} = opt. operating viscosity 16...36 mm²/s

referred to circuit temperature in closed circuits or tank temperature in open circuits.

The following limits are valid for extreme operating conditions:

ν_{min} = 5 mm²/s (closed circuit)
ν_{min} = 10 mm²/s (open circuit)

briefly (t ≤ 1 min) at max. permissible temperature of 115 °C.

Please note, that the max. fluid temperature of 115 °C may also not be exceeded in certain areas (for instance bearing area) The temperature in the bearing area is approx. 5 K higher than the average fluid temperature.

ν_{max} = 1600 mm²/s
briefly (t ≤ 1 min)
on cold start (t_{min} = -25°C, p ≤ 30 bar, n ≤ 1000 rpm).

At temperatures between –25 °C and –40 °C special measures may be required for certain installation positions. Please consult us for further information

For detailed information on operation at very low temperatures see RE 90300-03-B.

Notes on the selection of the hydraulic fluid

In order to select the correct fluid, it is necessary to know the operating temperature in the tank (open circuit), circuit temperature (closed circuits), in relation to the ambient temperature.

The fluid should be selected, so that within the operating temperatue range, the viscosity lies within the optimum range (ν_{opt}), see shaded section of the selection diagram. We recommend to select the higher viscosity grade in each case.

Example: at an ambient temperature of X °C the operating temperature in the tank is 60 °C. In the optimum viscosity range (ν_{opt}; shaded area) this corresponds to viscosity grades VG 46 resp. VG 68; select VG 68.

Important: The leakage fluid (case drain fluid) temperature is influenced by pressure and motor speed and is always higher than the tank temperature. However, at no point in the circuit may the temperature exceed 115 °C.

If it is not possible to comply with the above conditions because of extreme operating parameters or high ambient temperatures please consult us

Filtration of fluid

The finer the filtration the better the achieved cleanliness of the fluid and the longer the life of the axial piston unit.

To ensure a reliable functioning of the axial piston unit, a minimum cleanliness of

20/18/15 to ISO 4406 is necessary.

At very high fluid temperatures (90 °C to max. 115 °C) the minimum cleanliness has to be at least

19/17/14 to ISO 4406.

If above cleanliness classes cannot be met please consult us.

Operating pressure range

Pressure at port A or B

(Pressure data to DIN 24312)

Nominal pressure pN	280 bar [1]
Maximum pressure p_{max}	350 bar

With motors connected in series please consult us.

Case drain pressure

Max. permissible pressure at leakage port L

p_{abs} max operation as a motor in open circuit	4 bar abs
p_{abs} max operation as a motor in closed circuit	4 bar abs
p_{abs} max motor/pump operation in open circuit	2 bar abs

Direction of rotation

Direction of rotation, viewed on shaft end	
clockwise	counter-clockwise
B to **A**	**A** to **B**

Adjustment of displacement

The minimum displacement is steplessly adjustable within the range of the screw lenghts 1 or 2 (see ordering code).

Please state minimum displacement in clear text when ordering.

Selection diagram

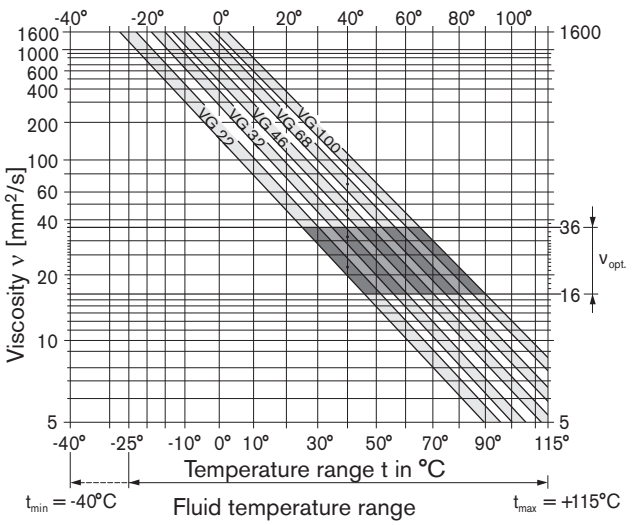

Technical data

Table of values (theoretical values, without efficiency levels and tolerances; values rounded)

Size				28	45	63	85
Displacement		$V_{g\ max}$	cm^3	28	45	62	87
		$V_{g\ min}$	cm^3	8 (VM)/10(VE)	12	16	22
Speed[1]							
max. at $V_{g\ max}$		$n_{0\ max}$	min^{-1}	4700	4000	3300	3100
max. at $V_{g\ min}$		$n_{0\ max\ zul}$	min^{-1}	5400	4600	3900	3560
Min. speed in cont. operation		$n_{0\ min}$	min^{-1}	250	250	250	250
Inlet flow							
bei $n_{0\ max}$ and $V_{g\ max}$		$q_{V0\ max}$	L/min	131,6	180	205	270
Torque constant[2] at $V_{g\ max}$		T_K	Nm/bar	0,445	0,716	1,002	1,35
Torque							
at $V_{g\ max}$	p_N= 280 bar	T_{max}	Nm	125	200	276	387
Actual starting torque							
at n = 0 min^{-1}	p_N = 280 bar	T	Nm ca.	92	149	205	253
Rotary stiffness	Shaft R	c	Nm/rad	26000	41000	69400	152900
	Shaft W	c	Nm/rad	19800	34400	54000	117900
Mass moment of inertia (about output shaft)		J	kgm^2	0,0017	0,0033	0,0056	0,012
Filling volume		V	L	0,6	0,7	0,8	1,0
Weight approx.		m	kg	14	18	26	34

[1] At maximal speed in closed circuit operation make sure that motor outlet pressure is at least ≥ 18 bar.
[2] In open circuit Δp 280bar at $p_{boostpress.}$ 2bar
In closed circuit Δp 260bar at $p_{boostpress.}$ 20bar

Minimum required outlet pressure (low pressure) at port A (B) depending on motor speed

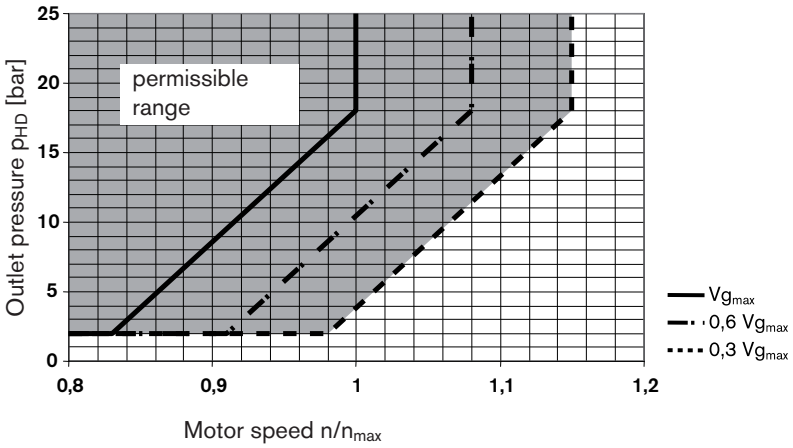

Technical data

Calculating size

Flow	$q_V = \frac{V_g \cdot n}{1000 \cdot \eta_V}$	[L/min]	
Torque	$T = \frac{1{,}59 \cdot V_g \cdot \Delta p \cdot \eta_{mh}}{100}$	[Nm]	
or	$T = T_K \cdot \Delta p \cdot \eta_{mh}$		
Output power	$P = \frac{2\pi \cdot T \cdot n}{60000} = \frac{q_V \cdot \Delta p \cdot \eta_t}{600}$	[kW]	
Output speed	$n = \frac{q_v \cdot 1000 \cdot \eta_v}{V_g}$	[min^{-1}]	

V_g = Displacement per rev. in cm^3
Δp = Differential pressure in bar
n = speed in rpm
η_V = Volumetric efficiency
η_{mh} = Mechanical-hydraulic efficiency
η_t = Total efficiency ($\eta_t = \eta_V \cdot \eta_{mh}$)
T_K = Torque constant

Permissible radial and axial forces on drive shaft

Size					28	45	63	85
Max. radial force	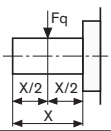	at X/2	$F_{q\,max}$	N	1200	1500	1700	2000
Max. axial force	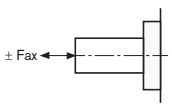		F_{ax}	N	1000	1500	2000	3000

Two-point direct control DG

Normally the motor is at max. displacement. By applying an external pressure to port G, the control piston is directly pressurized and the motor swivels back to min. displacement

The minimum required control pressure is $p_{St} \geq 40$ bar

Please note, that this minimum required control pressure at port G depends directly on the operating pressure p_B in port A or B. (Pressure in A or B),see control pressure diagram below. With a control pressure above this minimum required pressure level the motor will destroke properly.

Control pressure diagram

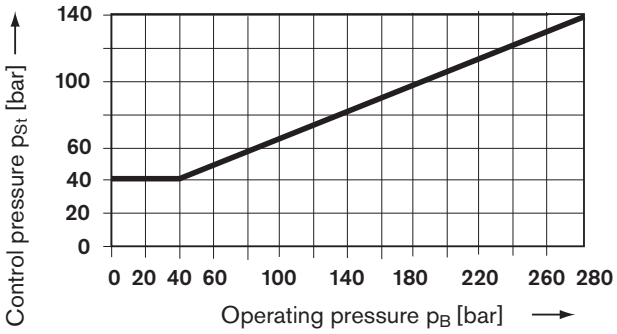

Control pressure = 0 bar ≙ $V_{g\,max}$

Control pressure ≥ 40 bar ≙ $V_{g\,min}$ (see circuit diagram)

The max. permissible control pressure is p_{St} = 280 bar.

V_{gmin} adjustment please state in clear text with order

Circuit diagram

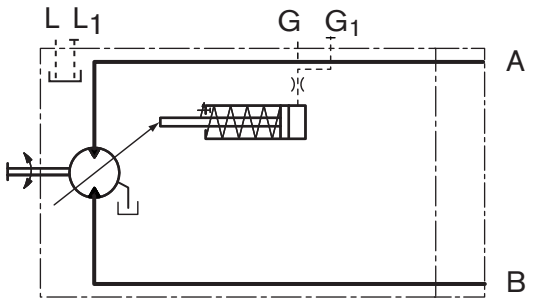

Ports for	
A, B	Pressure
L, L_1	Caise drain (L_1 plugged)
G, G_1	For external control pressure (G_1 plugged)

Two-point control, hydraulically operated HZ/HZ6

Normally the motor is at max. displacement. By applying a pilot pressure p_X to port X the pilot valve shifts and the control piston is pressurized causing the motor to swivel to min. displacement ($p_X \geq 30$bar).

The necessary control pressure is via a shuttle valve taken out of the motor pressure side A or B. A minimum pressure difference of $\Delta p_{A,B} \geq 20$ bar between the motor pressure sides is required.

Only $V_{g\,max}$ or $V_{g\,min}$ are possible.

$V_{g\,min}$ - adjustment please state in clear text when ordering.

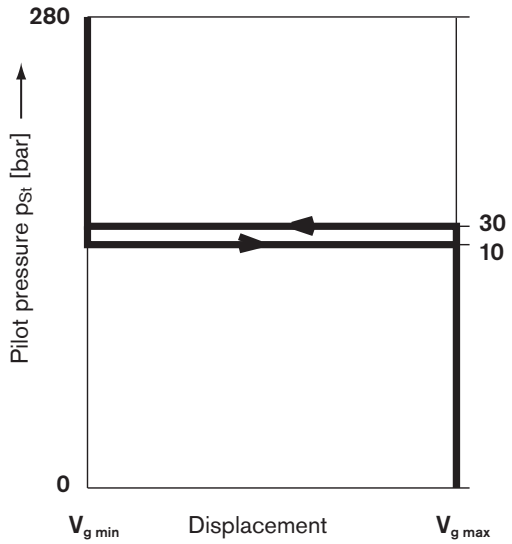

Pilot pressure p_X = 0 bar ≙ $V_{g\,max}$

Pilot pressure p_X ≥ 30 bar ≙ $V_{g\,min}$

Techn. data HZ/HZ6	
Minimum pilot pressure	30 bar
Maximum permissible pilot pressure	280 bar

Version HZ6 with stroking time shuttle orifice

Slow down of swivel action by means of shuttle orifice.

This enables a smooth swivel action.

Standard orifice size = 0.21 mm; other sizes on request.

Circuit diagram HZ

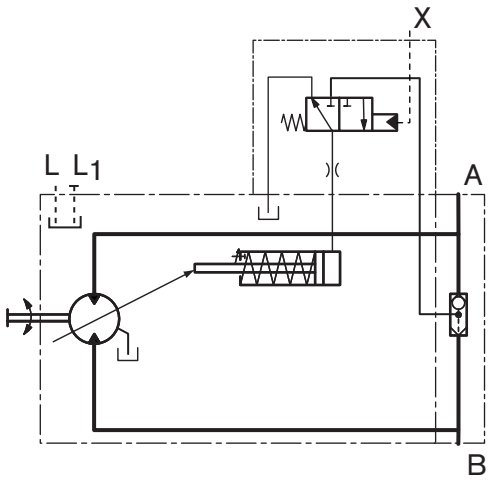

Ports for	
A, B	Pressure
L, L_1	Caise drain (L_1 plugged)
X	Pilot pressure (plugged)

Circuit diagram HZ6

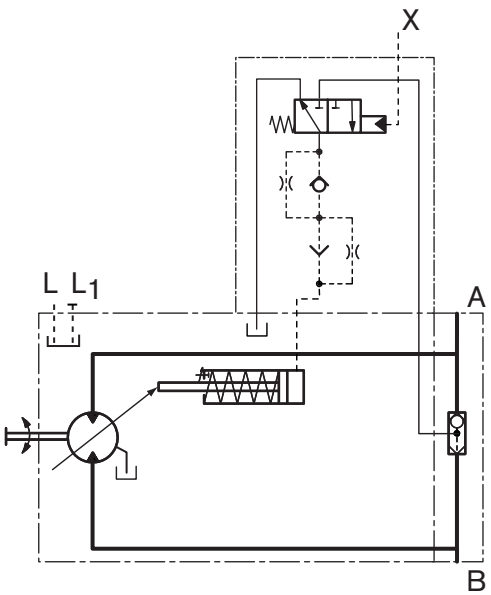

Ports for	
A, B	Pressure
L, L_1	Caise drain (L_1 plugged)
X	Pilot pressure (plugged)

Two-point control, electrically operated EZ[1)]

Normally the motor is at maximum displacement. By energizing the solenoid of the control valve, the control piston is pressurized and the motor swivels to minimum displacement.

The control pressure is via a shuttle valve taken out of the motor pressure side A or B. A minimum pressure difference of $\Delta p_{A,B} \geq 20$ bar between the pressure sides is required.

The motor can only swivel between $V_{g\,max}$ or $V_{g\,min}$.

$V_{g\,min}$ - adjustment please state in clear text when ordering.

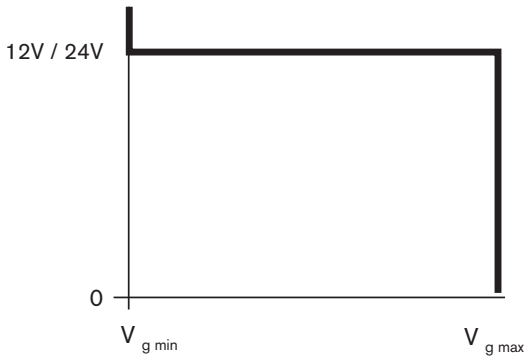

De-energized ≙ $V_{g\,max}$

Energized ≙ $V_{g\,min}$

Techn. data EZ		
Version	EZ 1/6	EZ 2/7
Supply voltage	12V DC	24V DC
Nom. current at 20°C	1.5 A	0.8 A
Duty cycler	100% ED	100% ED
Plug protection class to DIN 43650	IP 65	IP 65

Ambient temperature range -20°C to +60°C.
If the above temperature range cannot be met please consult us

Features

– with spring return at solenoid

– Solenoid plug can be turned 4 x 90°

Version EZ6/7 with stroking time shuttle orifice.

Slow down of swivel action by means of shuttle orifice.
This enables a smooth swivel action.
Standard orifice size = 0.21mm; other sizes on request.

More information see page 25

Circuit diagram EZ1/2

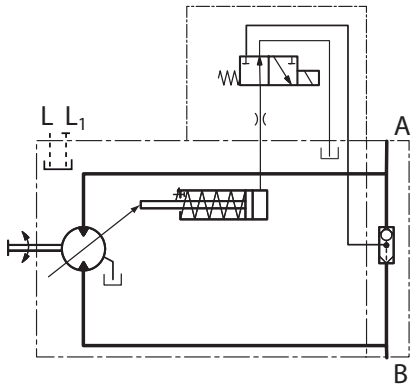

Ports for	
A, B	Pressure
L, L_1	Caise drain (L_1 plugged)

Connection to solenoid according to DIN 43650

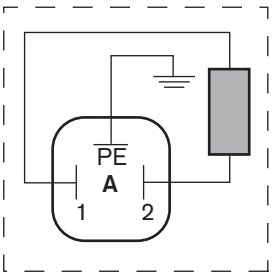

Plug connection to DIN EN 175301-803-A Cable screw joint M 16x1.5

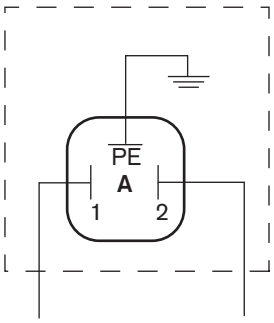

Circuit diagram EZ6/7

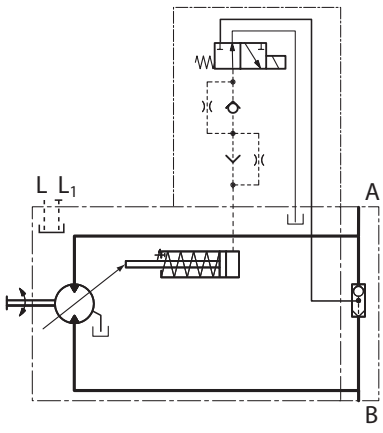

Ports for	
A, B	Pressure
L, L_1	Caise drain (L_1 plugged)

1) Shown in the unit dimensions: DIN connector from HIRSCHMANN;
Preferred for mobile applications (other dimensions): DEUTSCH connector molded, 2-pin – without suppressor diode

Dimensions A10VM size28

Before finalising your design please request a certifitied installation drawing.
Dimensions in mm

A10VM 28**DG**/52WX-VXC**10**N000

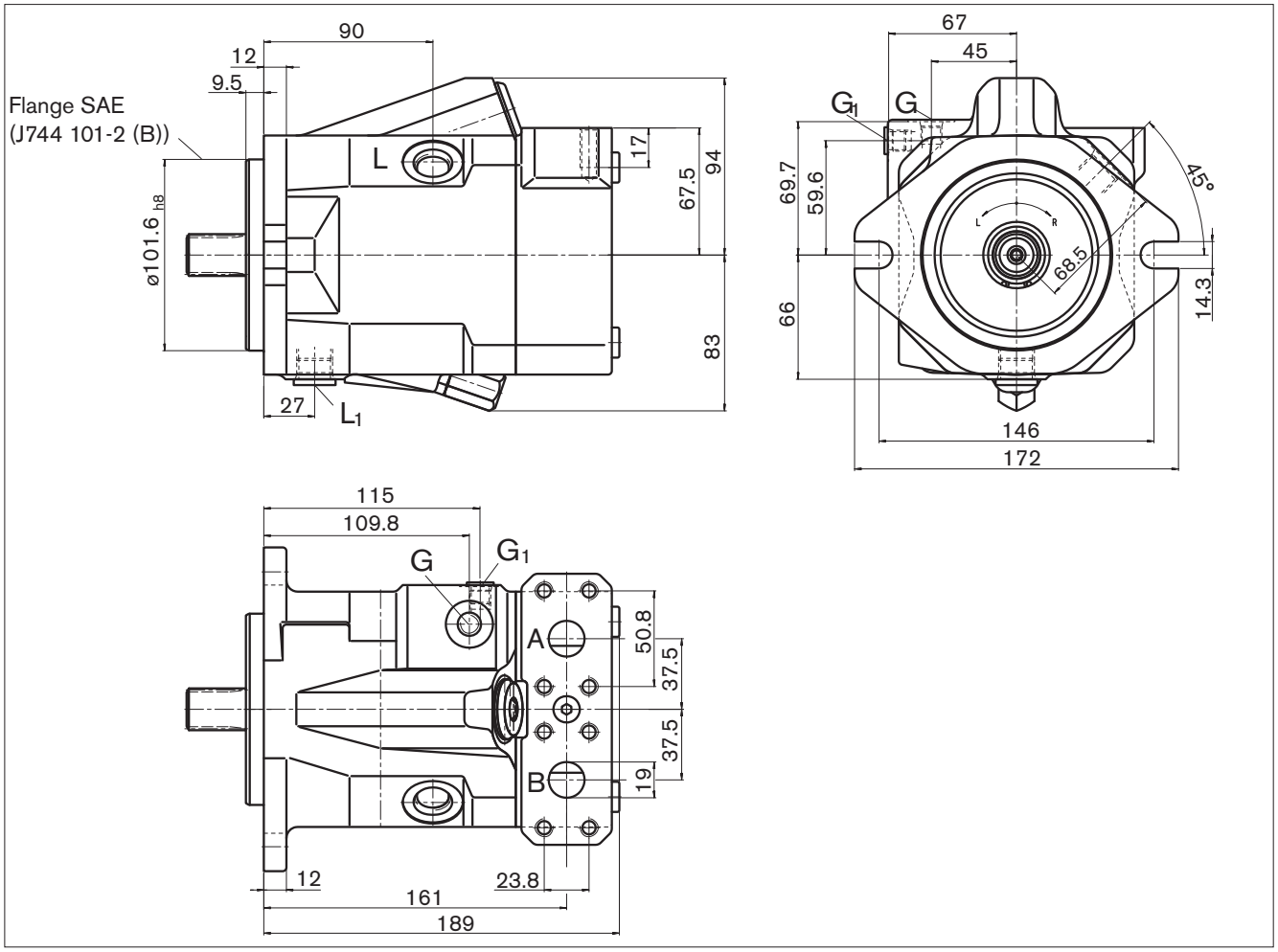

Ports

Designation	Port for	Standard	Size[2)]	Max. press. [bar][3)]	State
A, B	Pressure (High presure series, code 62)	SAE J518	3/4 in	350	O
	Fixing thread (port plate 10)	DIN 13	M10; 17 deep		O
A, B	Pressure (port plate 16)	DIN 3852-1[5)]	M27x2; 16 deep	350	O
L	Case drain	ISO 11926[5)]	3/4-16UNF-2B	4	O[4)]
L_1	Case drain	ISO 11926[5)]	3/4-16UNF-2B	4	X[4)]
G	External control pressure	ISO 11926[5)]	7/16-20 UNF-2B; 12 deep	350	O
G_1	External control pressure	ISO 11926[5)]	7/16-20 UNF-2B; 12 deep	350	X
X	Pilot pressure	ISO 11926[5)]	7/16-20UNF-2B; 10 deep	350	O

1) ANSI B92.1a-1976, 30° pressure angle, flat root, side fit, tolerance class 5
2) Observe the general instruction on page 28 for the maximum tightening torques.
3) Short-term pressure spikes may occur depending on the application. Keep this in mind when selecting measuring devices and fittings.
4) Depending on installation position L oder L_1 must be connected (see also page 27).
5) The spot face can be deeper than specified in the appropriate standard.

O = must be connected (plugged on delivery)
X = Plugged (in normal operation)

Dimensions A10VM size 28

Before finalising your design please request a certifiied installation drawing.
Dimensions in mm

A10VM 28**HZX(EZX)**/52WX-VXC**16**N000

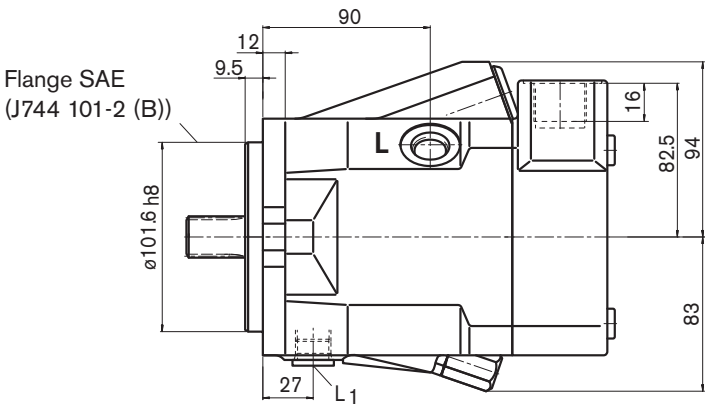

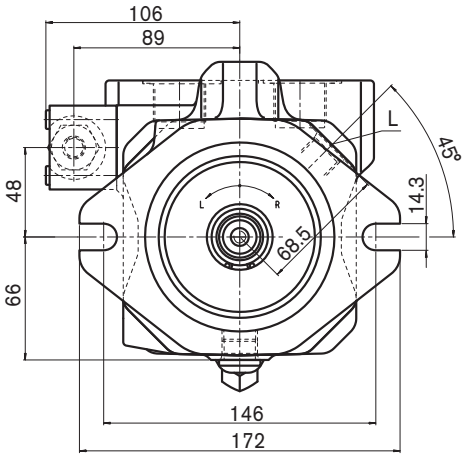

A10VM 28**HZX**/52WX-VXC**16**N000

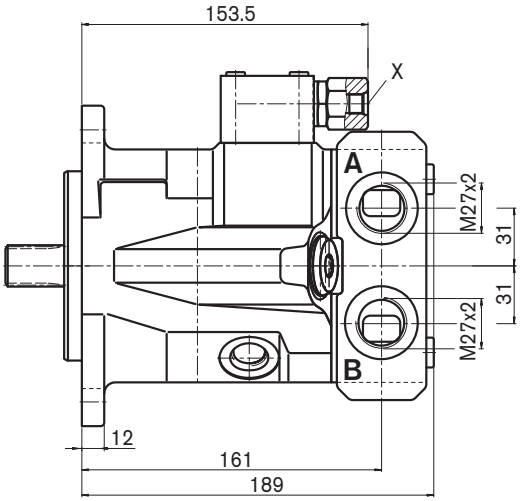

A10VM 28**EZX**/52WX-VXC**16**N000

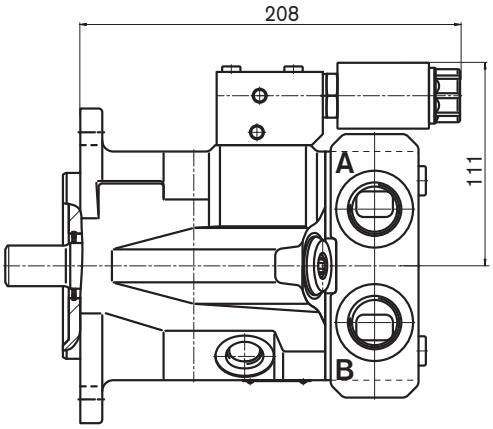

Drive shaft

R Splined 7/8 in 13T 16/32DP[1)]
(SAE J744 - 22-4 (B))

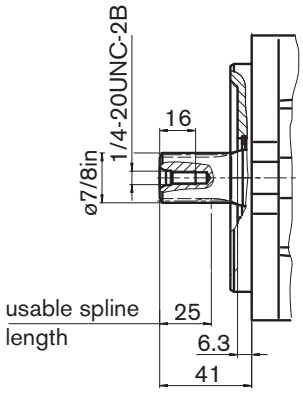

Dimensions A10VM size 45

Before finalising your design please request a certifified installation drawing.
Dimensions in mm

A10VM 45**DG**/52WX-VXC**10(11)**N000

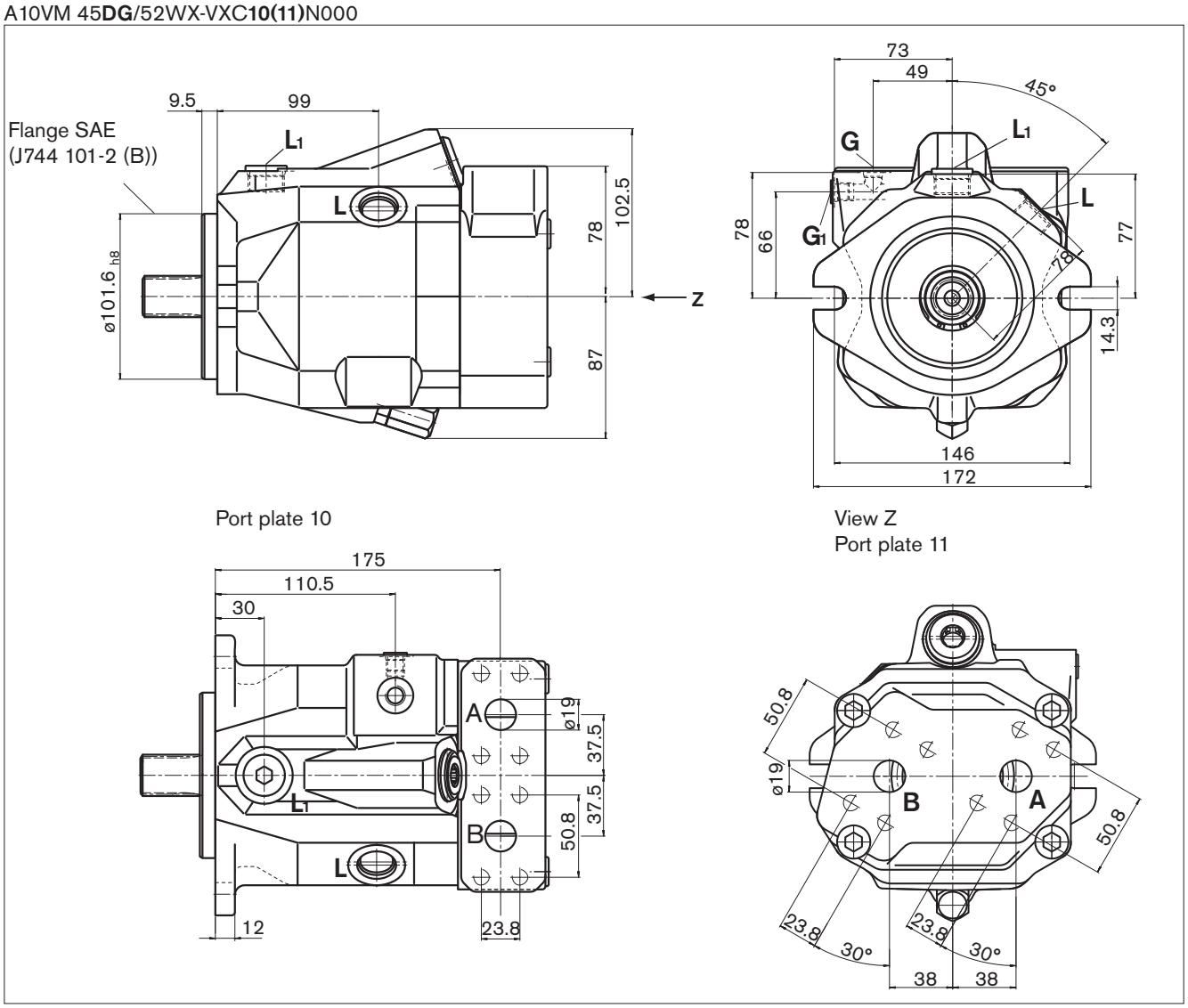

Ports

Designation	Port for	Standard	Size[2)]	Max. press. [bar][3)]	State
A, B	Pressure (high pressure series, code 62)	SAE J518	3/4 in	350	O
	Fixing thread (port plate 10)	DIN 13	M10; 17 deep		O
A, B	Pressure (port plate 16)	DIN 3852-1[5)]	M27x2; 16 deep	350	O
L	Case drain	ISO 11926[5)]	7/8-14UNF-2B	4	O[4)]
L_1	Case drain	ISO 11926[5)]	7/8-14UNF-2B	4	X[4)]
G	External control pressure	ISO 11926[5)]	7/16-20 UNF-2B; 12 deep	350	O
G_1	External control pressure	ISO 11926[5)]	7/16-20 UNF-2B; 12 deep	350	X
X	Pilot pressure	ISO 11926[5)]	7/16-20UNF-2B; 10 deep	350	O

1) ANSI B92.1a-1976, 30° pressure angle, flat root, side fit, tolerance class 5
2) Observe the general instruction on page 28 for the maximum tightening torques.
3) Short-term pressure spikes may occur depending on the application. Keep this in mind when selecting measuring devices and fittings.
4) Depending on installation position L oder L_1 must be connected (see also page 27).
5) The spot face can be deeper than specified in the appropriate standard.

O = must be connected (plugged on delivery)
X = Plugged (in normal operation)

Dimensions A10VM size 45

Before finalising your design please request a certifiied installation drawing.
Dimensions in mm

A10VM 45**HZX(EZX)**/52WX-VXC**11(16)**N000

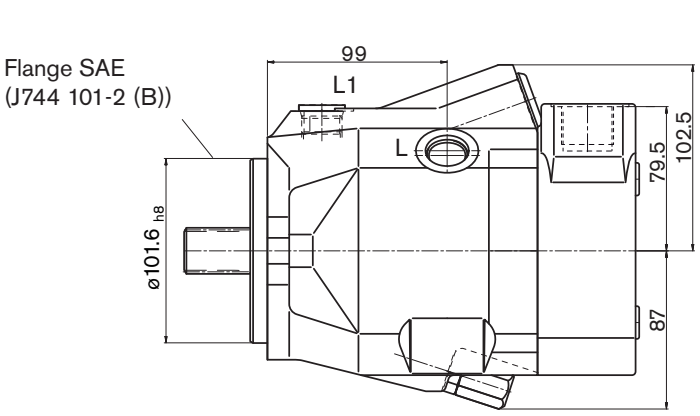

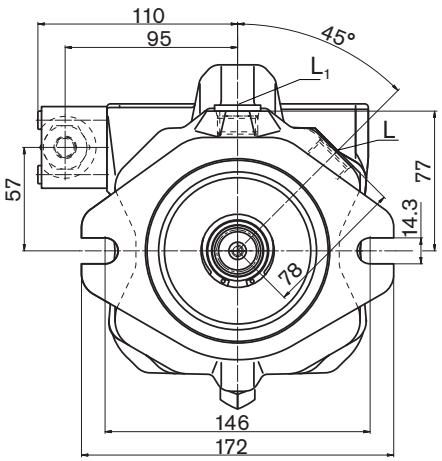

A10VM 45**HZX**/52WX-VXC**16**N000

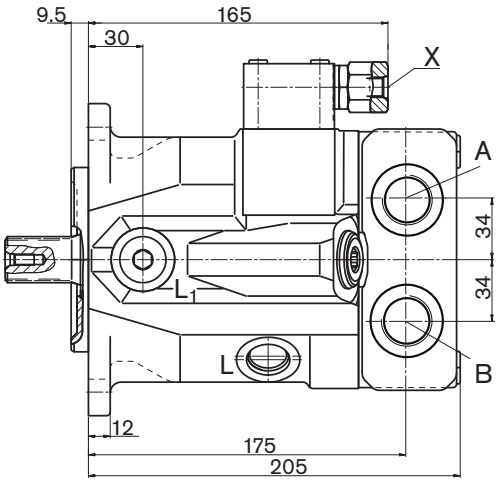

A10VM 45**EZX**/52WX-VXC**11**N000

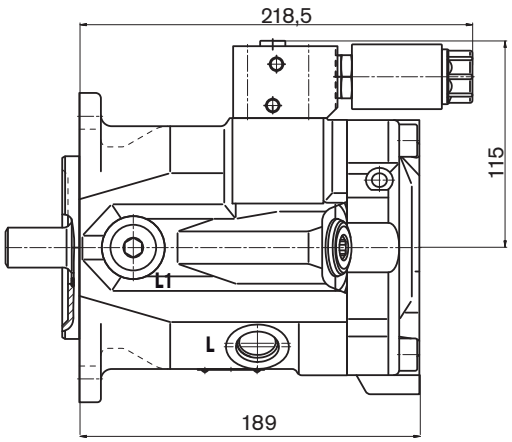

Drive shaft

R Splined 1 in 15T 16/32DP[1)] (SAE J744 - 25-4 (B-B))

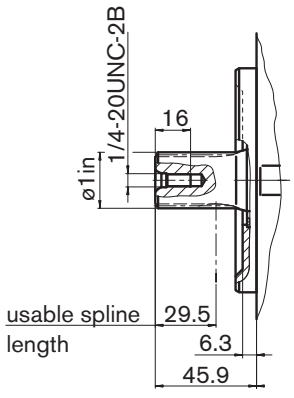

W Splined 7/8 in 13T 16/32DP[1)] (SAE J744 - 22-4 (B))

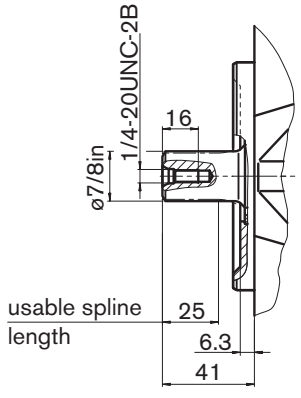

Dimensions A10VM size 63

Before finalising your design please request a certifiied installation drawing.
Dimensions in mm

A10VM 63**DG**/52WX-VXC**10**N000

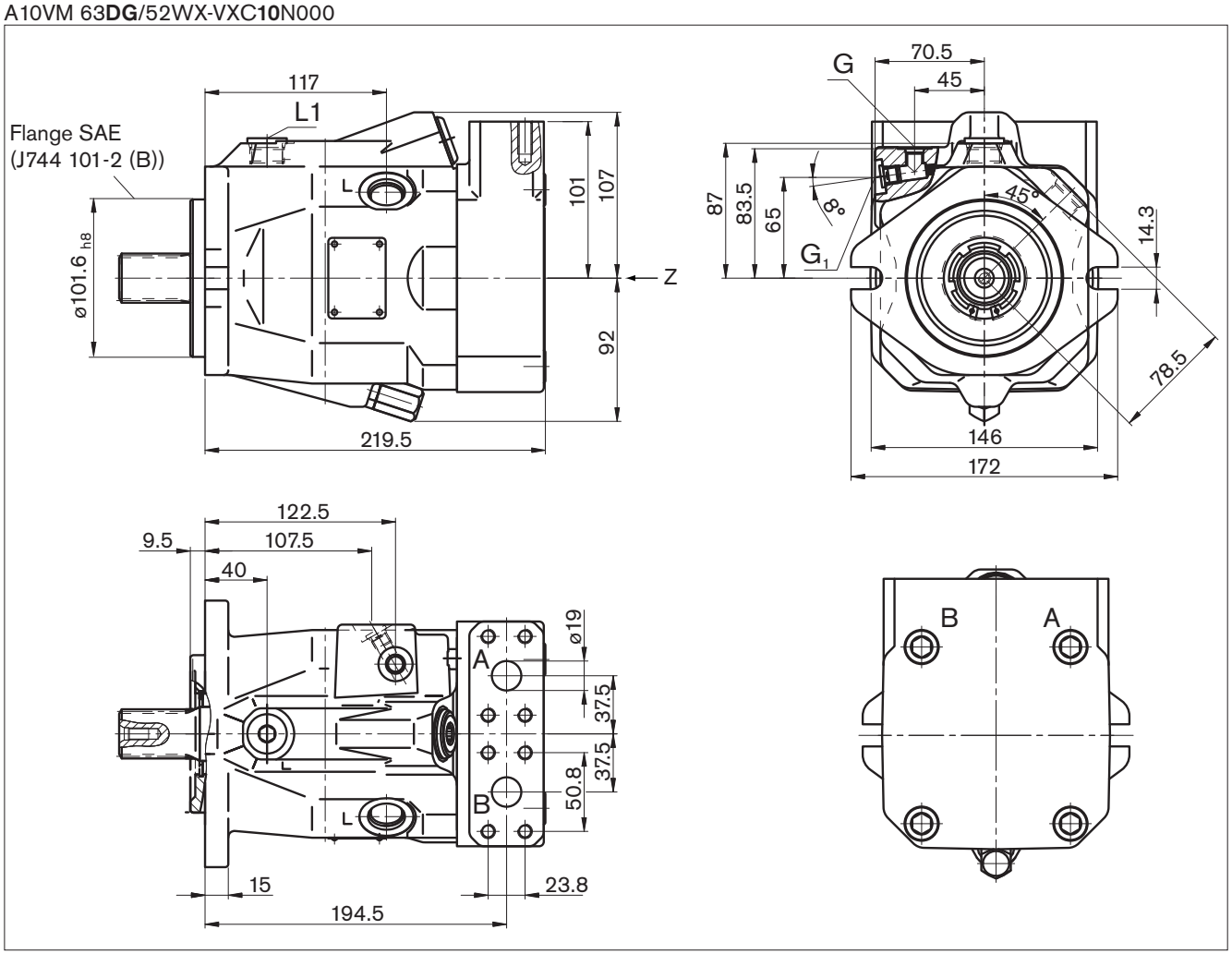

Ports

Designation	Port for	Standard	Size[2)]	Max. press. [bar][3)]	State
A, B	Pressure (high pressure series, code 62)	SAE J518	3/4 in	350	O
	Fixing thread (port plate 10)	DIN 13	M10; 17 deep		O
A, B	Pressure (port plate 16)	DIN 3852-1[5)]	M27x2; 16 deep	350	O
L	Case drain	ISO 11926[5)]	7/8-14UNF-2B	4	O[4)]
L_1	Case drain	ISO 11926[5)]	7/8-14UNF-2B	4	X[4)]
G	External control pressure	ISO 11926[5)]	7/16-20 UNF-2B; 12 deep	350	O
G_1	External control pressure	ISO 11926[5)]	7/16-20 UNF-2B; 12 deep	350	X
X	Pilot pressure	ISO 11926[5)]	7/16-20UNF-2B; 10 deep	350	O

1) ANSI B92.1a-1976, 30° pressure angle, flat root, side fit, tolerance class 5
2) Observe the general instruction on page 28 for the maximum tightening torques.
3) Short-term pressure spikes may occur depending on the application. Keep this in mind when selecting measuring devices and fittings.
4) Depending on installation position L oder L_1 must bee connected (see also page 27).
5) The spot face can be deeper than specified in the appropriate standard.

O = must bee connected (plugged on delivery)
X = Plugged (in normal operation)

Dimensions A10VM size 63

Before finalising your design please request a certifified installation drawing.
Dimensions in mm

A10VM 63**HZX(EZX)**/52WX-VXC**10(16)**N000

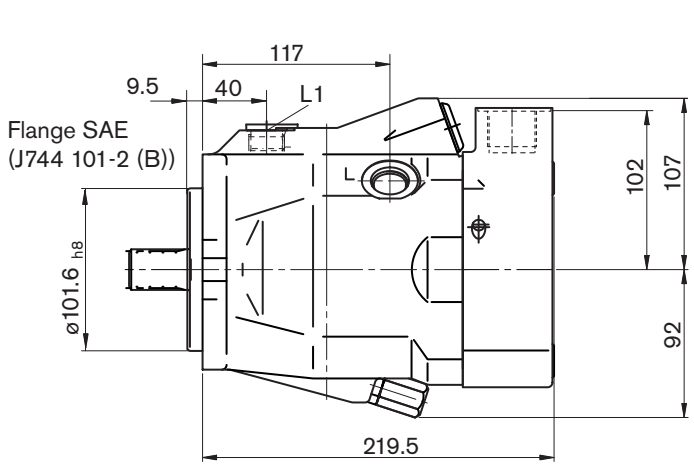

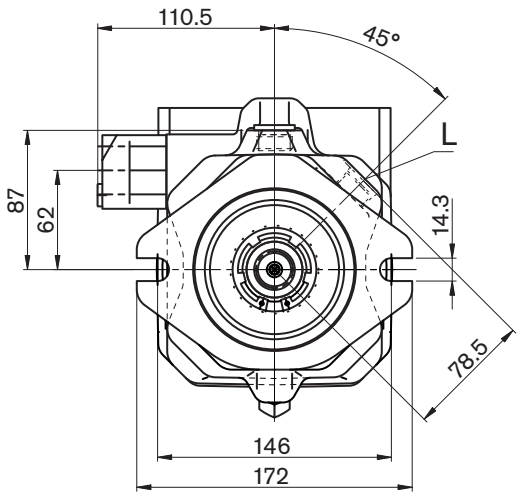

A10VM 63**HZX**/52WX-VXC**16**N000

A10VM 63**EZX**/52WX-VXC**10**N000

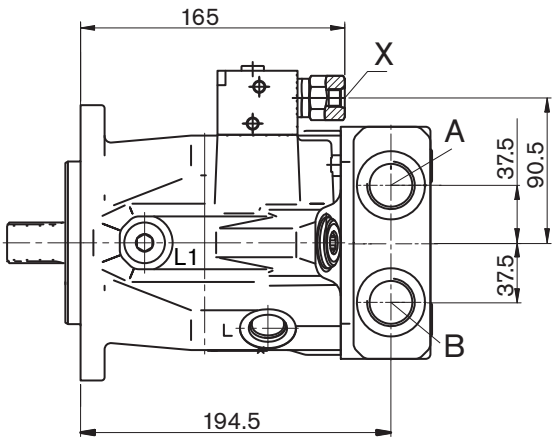

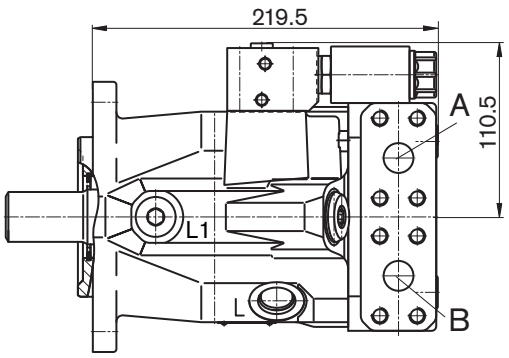

Drive shaft

R Splined 1 1/4 in 14T 12/24DP[1)]
(SAE J744 - 32-4 (C))

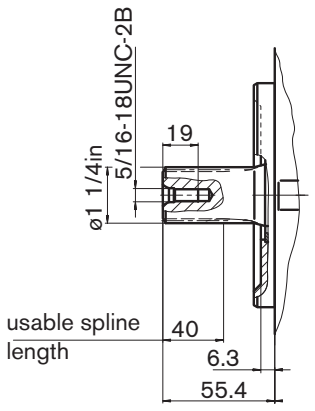

W Splined 1 in 15T 16/32DP[1)]
(SAE J744 - 25-4 (B-B))

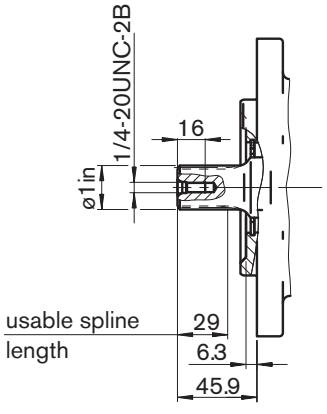

Dimensions A10VM size 85

Before finalising your design please request a certifiied installation drawing.
Dimensions in mm

A10VM 85**DG**/52WX-VXC**10**N000

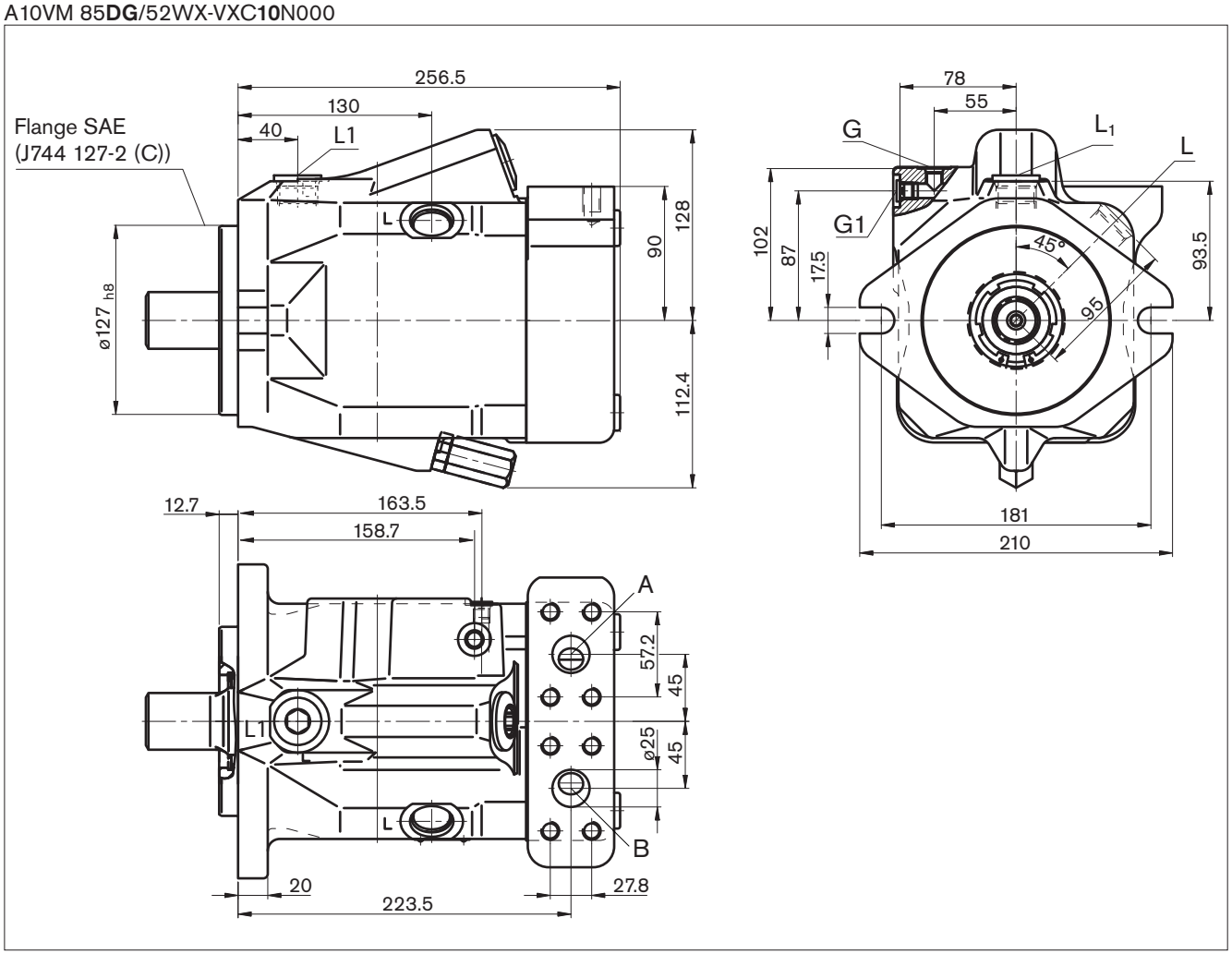

Ports

Designation	Port for	Standard	Size[2)]	Max. press. [bar][3)]	State
A, B	Pressure (high pressure sereis, code 62)	SAE J518C	1 in	350	O
	Fixing thread (port plate 10)	DIN 13	M12; 17 deep		O
L	Case drain	ISO 11926[5)]	1 1/16-12UN-2B	4	O[4)]
L_1	Case drain	ISO 11926[5)]	1 1/16-12UN-2B	4	X[4)]
G	external control pressure	ISO 11926[5)]	7/16-20 UNF-2B; 12 deep	350	O
G_1	external control pressure	ISO 11926[5)]	7/16-20 UNF-2B; 12 deep	350	X

1) ANSI B92.1a-1976, 30° pressure angle, flat root, side fit, tolerance class 5
2) Observe the general instruction on page 28 for the maximum tightening torques.
3) Short-term pressure spikes may occur depending on the application. Keep this in mind when selecting measuring devices and fittings.
4) Depending on installation position L oder L_1 must be connected (see also page 27).
5) The spot face can be deeper than specified in the appropriate standard.

O = must be connected (plugged on delivery)
X = Plugged (in normal operation)

Dimensions A10VM size 85

Before finalising your design please request a certifiied installation drawing.
Dimensions in mm

A10VM 85**EZX**/52WX-VXC**10**N000

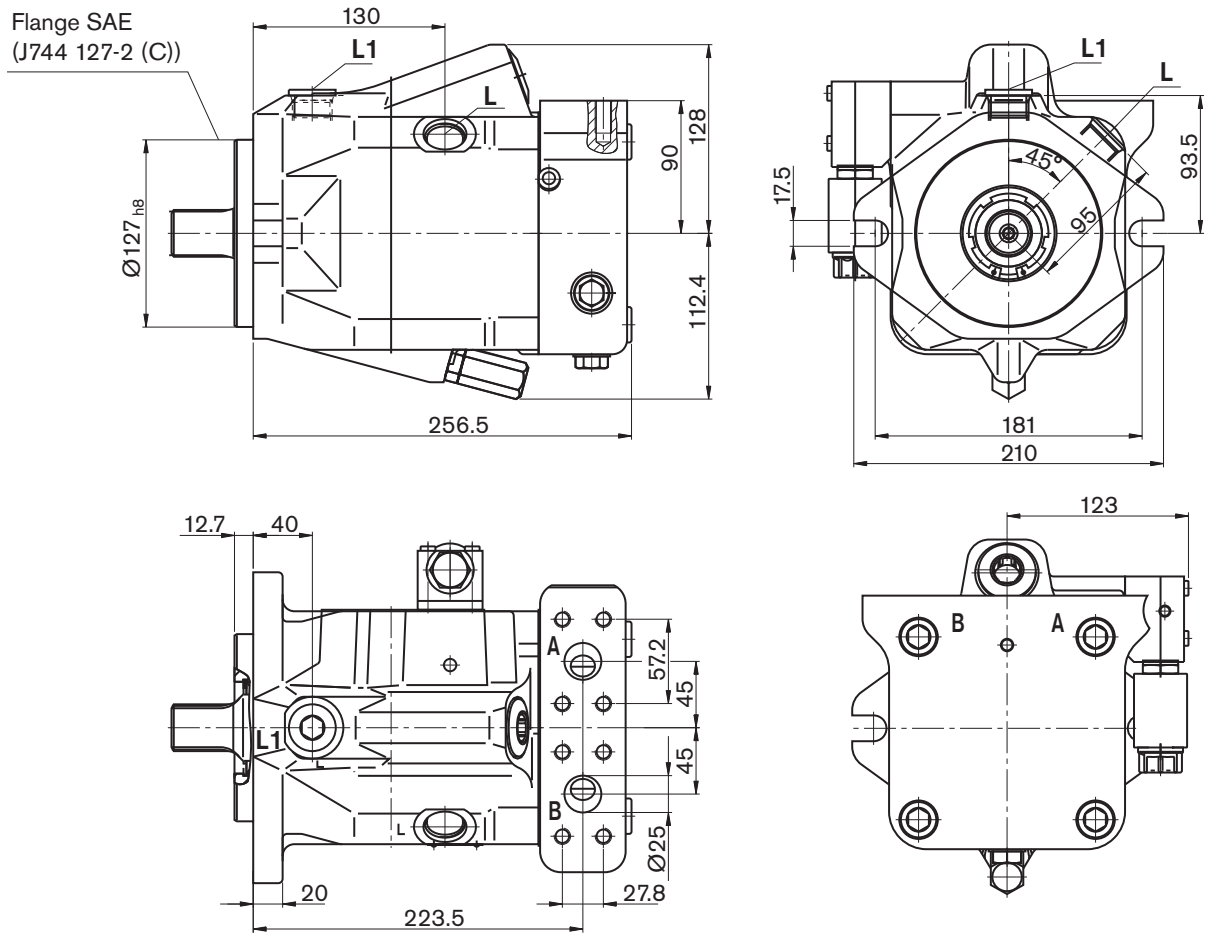

Drive shaft

R Splined 1 1/2 in 17T 12/24DP[1)]
(SAE J744 - 38-4 (C-C))

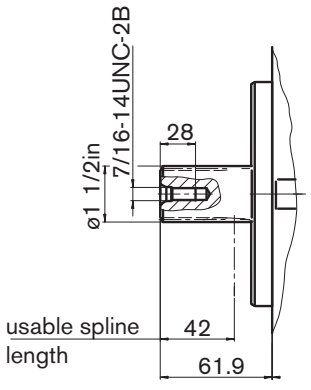

W Splined 1 1/4 in 14T 12/24DP[1)]
(SAE J744 - 32-4 (C))

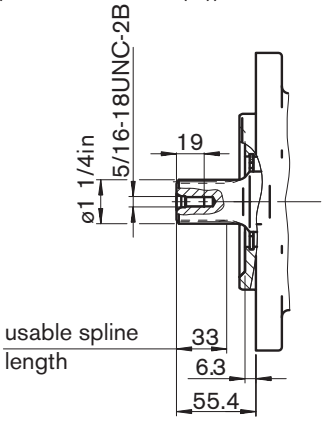

Dimensions A10VE size 28

Before finalising your design please request a certifiied installation drawing.
Dimensions in mm

A10VE 28**DG**/52WX-VXF**16**N000

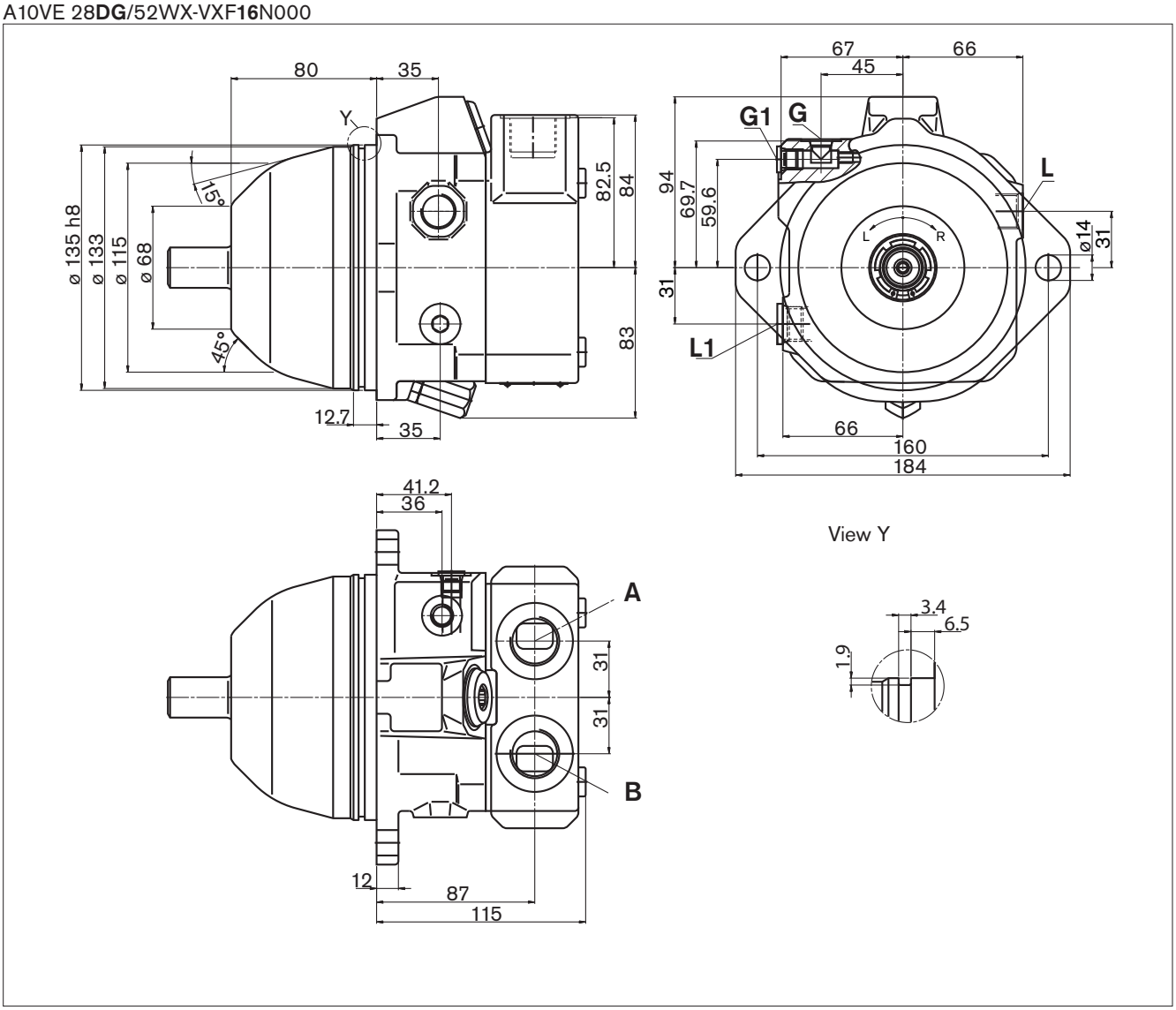

Ports

Designation	Port for	Standard	Size[2)]	Max. press. [bar][3)]	State
A, B	Pressure (high pressure series, code 62)	SAE J518	3/4 in	350	O
	Fixing thread (port plate 10)	DIN 13	M10; 17 deep		O
A, B	Pressure (port plate 16)	DIN 3852-1[5)]	M27x2; 16 deep	350	O
L	Case drain	ISO 11926[5)]	3/4-16UNF-2B	4	O[4)]
L_1	Case drain	ISO 11926[5)]	3/4-16UNF-2B	4	X[4)]
G	External control pressure	ISO 11926[5)]	7/16-20 UNF-2B; 12 deep	350	O
G_1	External control pressure	ISO 11926[5)]	7/16-20 UNF-2B; 12 deep	350	X
X	Pilot pressure	ISO 11926[5)]	7/16-20UNF-2B; 10 deep	350	O

1) ANSI B92.1a-1976, 30° pressure angle, flat root, side fit, tolerance class 5
2) Observe the general instruction on page 28 for the maximum tightening torques.
3) Short-term pressure spikes may occur depending on the application. Keep this in mind when selecting measuring devices and fittings.
4) Depending on installation position L oder L_1 must be connected (see also page 27).
5) The spot face can be deeper than specified in the appropriate standard.

O = must be connected (plugged on delivery)
X = Plugged (in normal operation)

Dimensions A10VE size 28

Before finalising your design please request a certifiied installation drawing.
Dimensions in mm

A10VE 28**HZX(EZX)**/52WX-VXF**10**N000

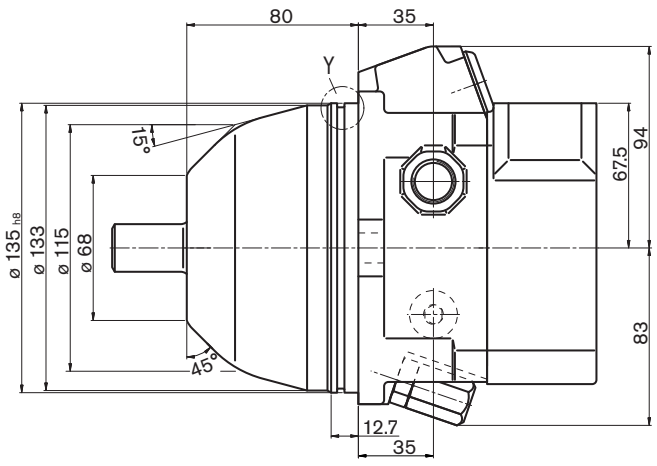

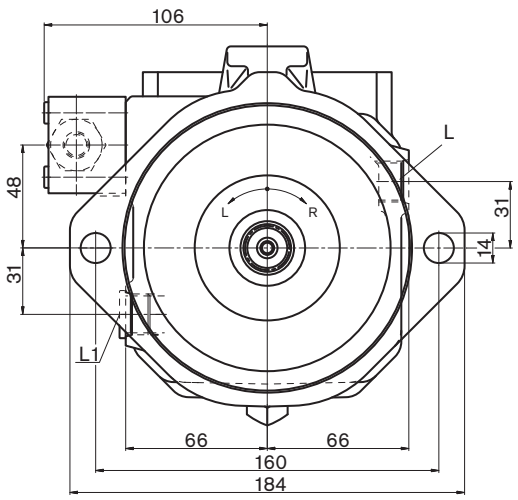

A10VE 28**HZX**/52WX-VXF**10**N000

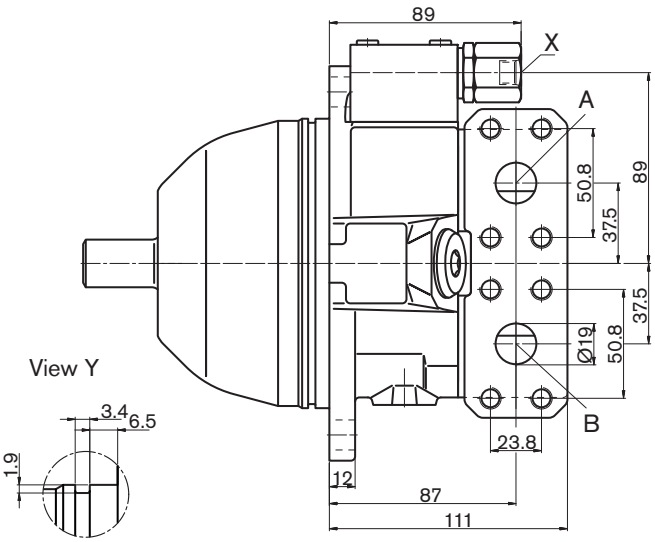

A10VE 28**EZX**/52WX-VXF**10**N000

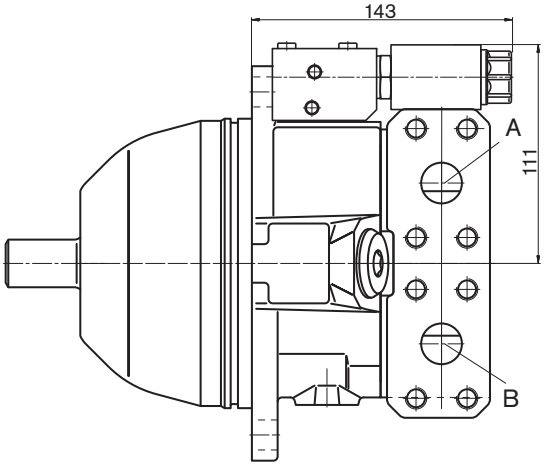

Drive shaft

R Splined 7/8 in 13T 16/32DP[1)]
(SAE J744 - 22-4 (B))

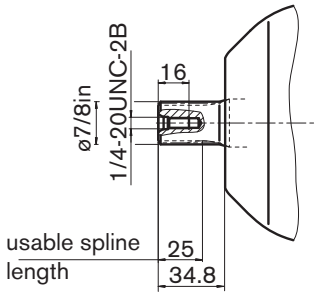

Dimensions A10VE size 45

Before finalising your design please request a certifified installation drawing.
Dimensions in mm

A10VE 45**DG**/52WX-VXF**10(11)**N000

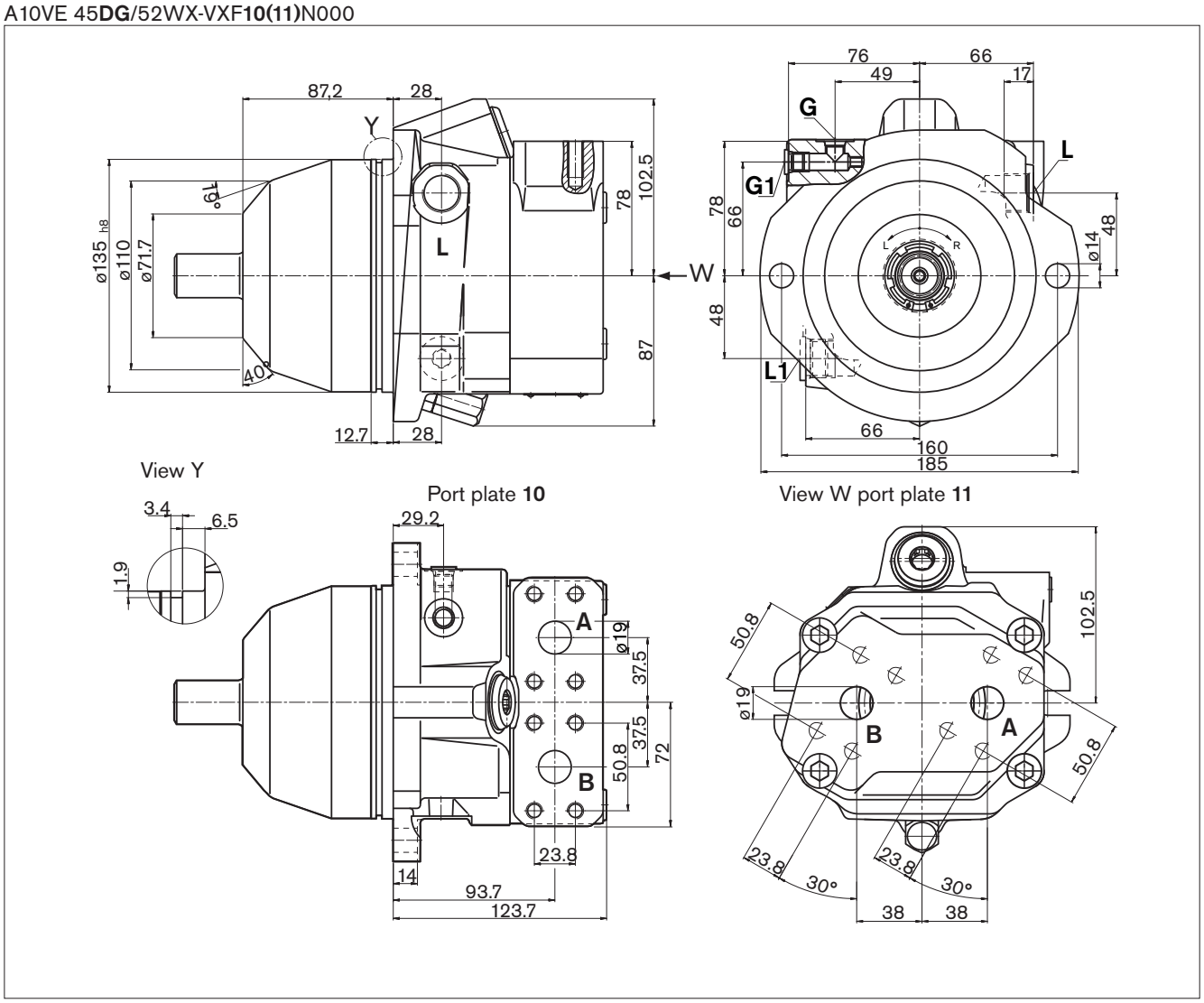

Ports

Designation	Port for	Standard	Size[2)]	Max. press. [bar][3)]	State
A, B	Pressure (high pressure series, code 62)	SAE J518	3/4 in	350	O
	Fixing thread (port plate 10, 11)	DIN 13	M10; 17 deep		O
A, B	Pressure (port plate 16)	DIN 3852-1[5)]	M27x2; 16 deep	350	O
L	Case drain	ISO 11926[5)]	7/8-14UNF-2B	4	O[4)]
L_1	Case drain	ISO 11926[5)]	7/8-14UNF-2B	4	X[4)]
G	External control pressure	ISO 11926[5)]	7/16-20 UNF-2B; 12 deep	350	O
G_1	External control pressure	ISO 11926[5)]	7/16-20 UNF-2B; 12 deep	350	X
X	Pilot pressure	ISO 11926[5)]	7/16-20UNF-2B; 10 deep	350	O

1) ANSI B92.1a-1976, 30° pressure angle, flat root, side fit, tolerance class 5
2) Observe the general instruction on page 28 for the maximum tightening torques.
3) Short-term pressure spikes may occur depending on the application. Keep this in mind when selecting measuring devices and fittings.
4) Depending on installation position L oder L_1 must be connected (see also page 27).
5) The spot face can be deeper than specified in the appropriate standard.

O = must be connected (plugged on delivery)
X = Plugged (in normal operation)

Dimensions A10VE size 45

Before finalising your design please request a certifiied installation drawing.
Dimensions in mm

A10VE 45**HZX(EZX)**/52WX-VXF**16**N000

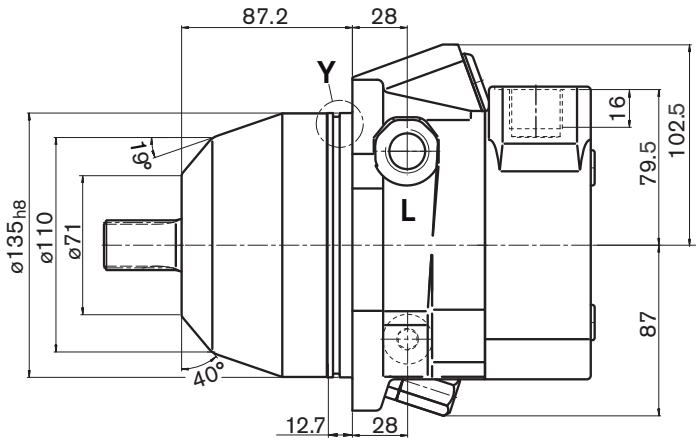

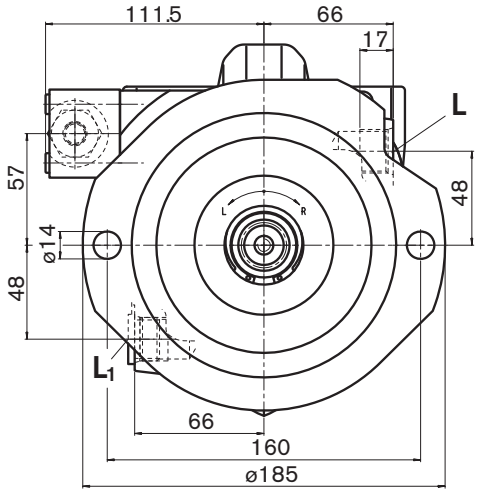

View Y

A10VE 45**HZX**/52WX-VXF**16**N000

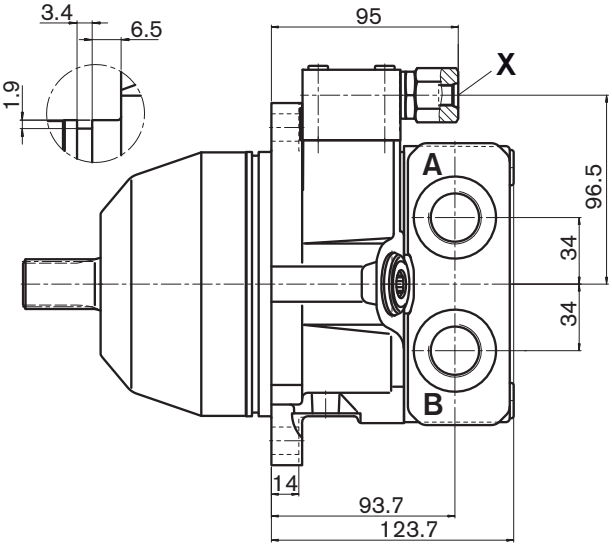

A10VE 45**EZX**/52WX-VXF**16**N000

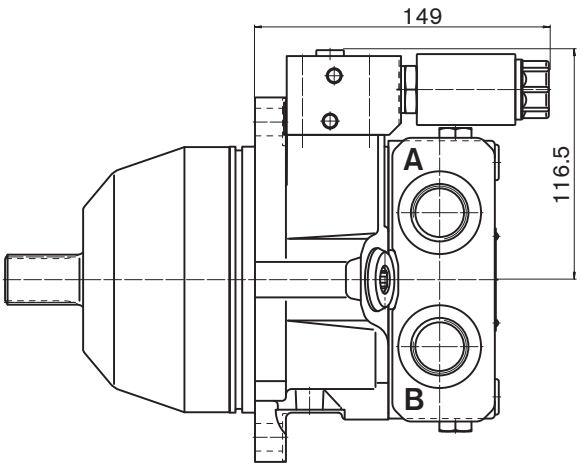

Drive shaft

R Splined 1 in 15T 16/32DP[1)] (SAE J744 - 25-4 (B-B))

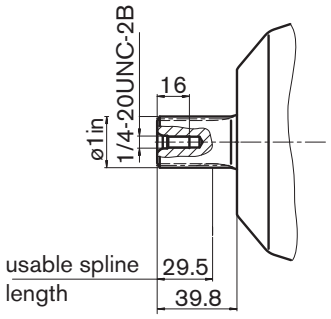

W Splined 7/8 in 13T 16/32DP[1)] (SAE J744 - 22-4 (B))

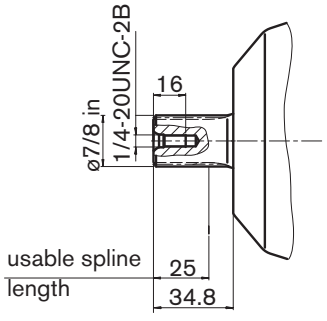

Dimensions A10VE size 63

Before finalising your design please request a certifiied installation drawing.
Dimensions in mm

A10VE 63**HZ**/52WX-VXF**10**N000

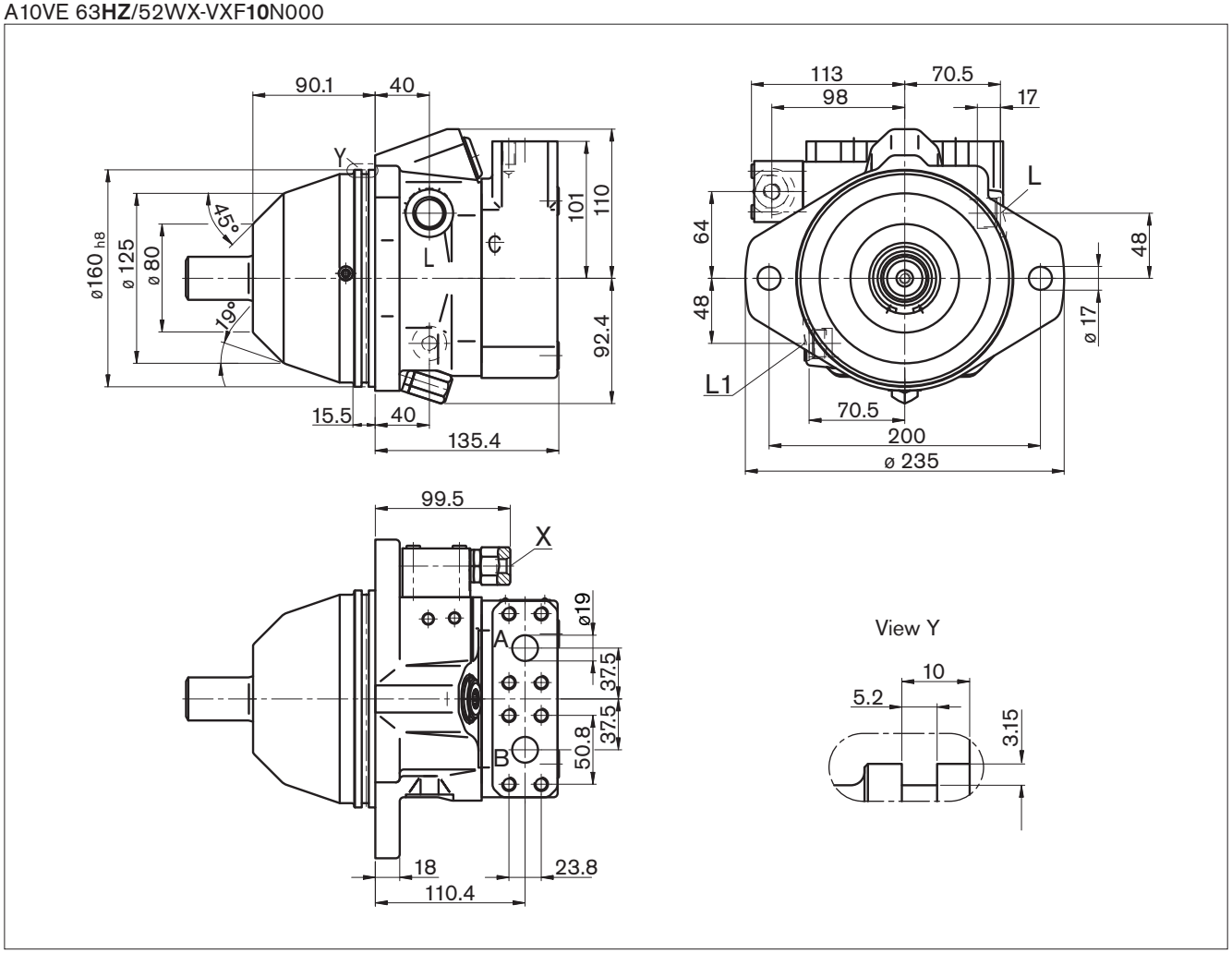

Ports

Designation	Port for	Standard	Size[2)]	Max. press. [bar][3)]	State
A, B	Pressure (high pressure series, code 62)	SAE J518	3/4 in	350	O
	Fixing thread (port plate 10)	DIN 13	M10; 17 deep		O
A, B	Pressure (port plate 16)	DIN 3852-1[5)]	M27x2; 16 deep	350	O
L	Case drain	ISO 11926[5)]	7/8-14UNF-2B	4	O[4)]
L_1	Case drain	ISO 11926[5)]	7/8-14UNF-2B	4	X[4)]
X	External control pressure	ISO 11926[5)]	7/16-20UNF-2B; 10 deep	350	O

1) ANSI B92.1a-1976, 30° pressure angle, flat root, side fit, tolerance class 5
2) Observe the general instruction on page 28 for the maximum tightening torques.
3) Short-term pressure spikes may occur depending on the application. Keep this in mind when selecting measuring devices and fittings.
4) Depending on installation position L oder L_1 must be connected (see also page 27).
5) The spot face can be deeper than specified in the appropriate standard.

O = must be connected (plugged on delivery)
X = Plugged (in normal operation)

Dimensions A10VE size 63

Before finalising your design please request a certifified installation drawing.
Dimensions in mm

A10VE 63**EZX**/52WX-VXF**16**N000

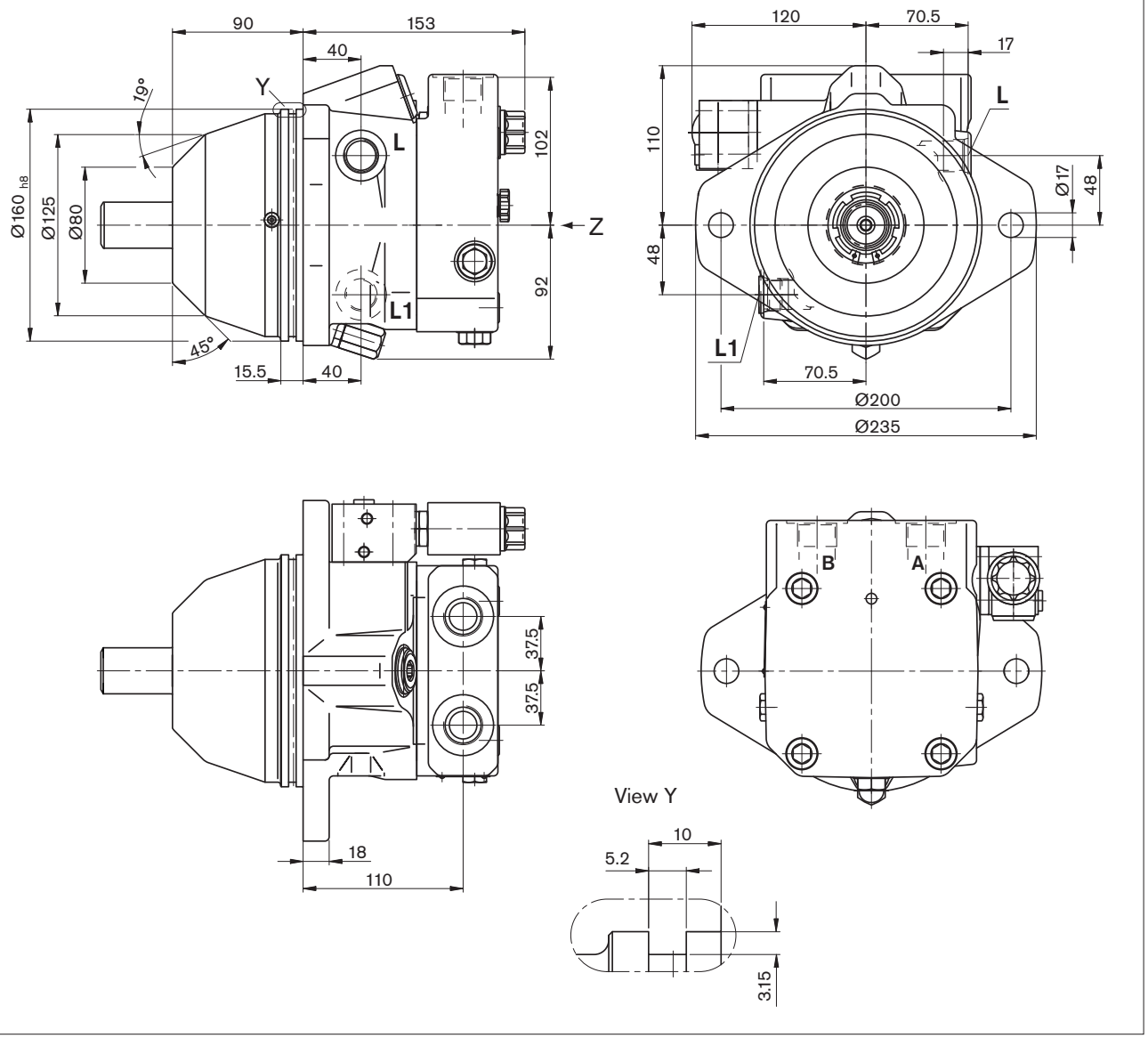

Drive shaft

R Splined 1 1/4 in 14T 12/24DP[1] (SAE J744 - 32-4 (C))

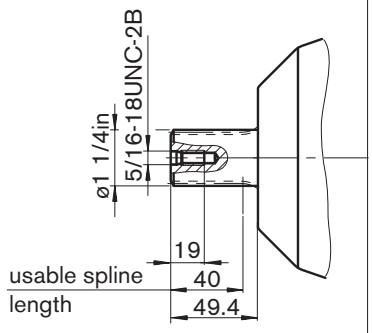

W Splined 1 in 15T 16/32DP[1] (SAE J744 - 25-4 (B-B))

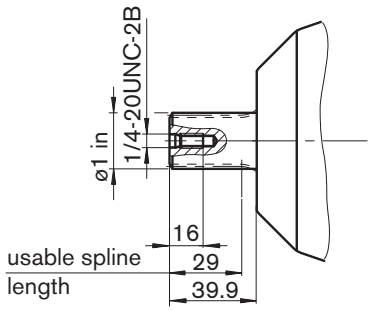

Integrated flushing and boost press. relief valve, N007

The flushing and boost pressure relief valve is used in closed circuits to flush an unacceptable heat load out of the circuit and to maintain a minimum boost pressure level (fixed setting). The valve is integrated into the port plate.

A built-in fixed orifice determines the flushing flow, which is taken out of the low pressure side of the loop and directed into the motor housing. It leaves the housing together with the case drain flow. This combined flow must be replenished with fresh, cool fluid by means of the boost pump.

Standard flushing flow

With a pressure of p_{ND} = 20 bar in the low pressure side of the circuit and an orifice dia. of ø1.6 mm the flushing flow amounts to 5.5 L/min (Size 28 - 85).
Other orifice diameters can be ordered in clear text.

Further flushing flows for sizes 28 - 85 see table:

Flushing flow (L/min)	Orifice dia. in mm
3.5	1.2
5.5	1.6
7.2	1.8

Circuit diagram

e.g. A10VO..HZ/...N007

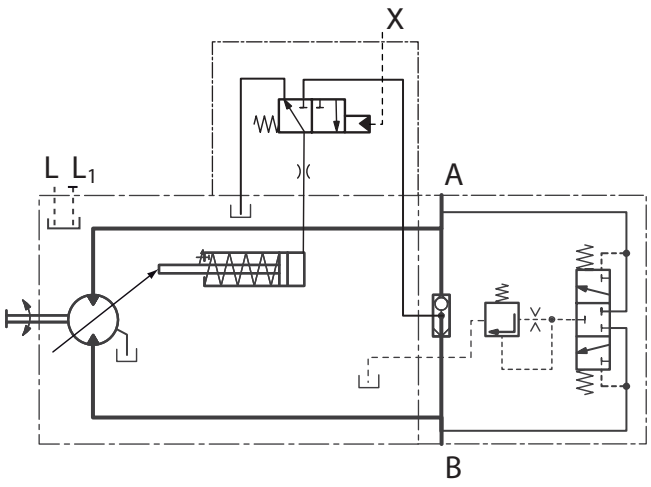

Ports for	
A, B	pressure
L, L_1	case drain (L_1 plugged)
X	pilot pressure

Connector for solenoids

DEUTSCH WKM08130D-01-C-V-XXDN, 2-pin

Molded, without bidirectionale suppressor diode (Standard) _____ P

Rexroth part-No. R902650409 _____ 12V
R902650408 _____ 24V

Technical data of electric	
Voltage	Cocurrent flow
Supply voltage	12 or 24 V
Nominal current	1.5 A
Voltage tolerance	-15 % bis +15 %
Operating period	100 %
Protection class	IP 65
Technical data of hydraulic	
Nominal pressure	maximum 350 bar
Flow	maximum 25 L/min
Sealing	FKM (flour-rubber)
Operating temperature of fluid	-20 °C to +120 °C
Viskosity range	10 mm^2/s to 420 mm^2/s
Function	D

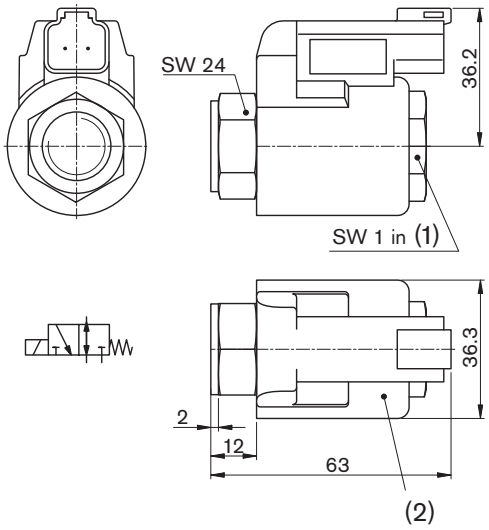

The female connector is not part of the scope of supply.
This can be supplied by Rexroth on request.

HIRSCHMANN DIN EN 175 301-803-A /ISO 4400
(not for new projects)

without bidirectional suppressor diode _____ H

Degree of protection to DIN/EN 60529: IP65

The sealing ring in the cable gland (M16x1,5) is suitable for cables 4.5 mm to 10 mm in diameter.

The HIRSCHMANN-connector is part of the scope of supply of the motor.

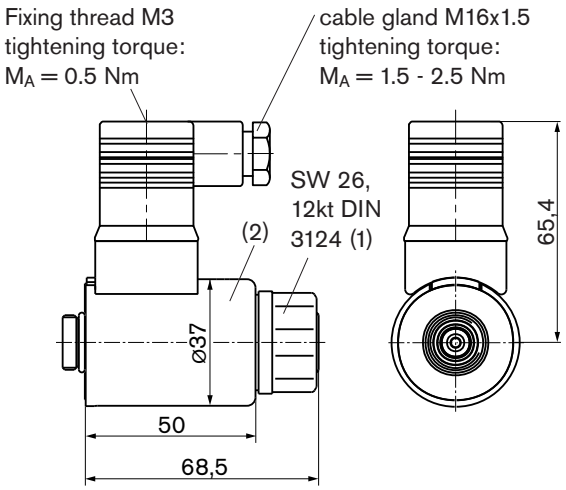

Note for round solenoids:

The position of the connector can be changed by turning the solenoid body.

Proceed as follows:

– 1. Loosen fixing nut (1)

– 2. Turn the solenoid body (2) to the desired position.

– 3. Tighten the fixing nut

Tightening torque of fixing nut: 5+1 Nm

Electronic controls

Control	Electronic function	Electronics		Further information
Electric pressure control	Regulated current outout	RA	analogue	RD 95 230
		VT2000	analogue	RD 29 904
		RC2-2/21 [1]	digital	RD 95 201

[1] Current outputs for 2 valves, sparately controllable

Speed pickup

Before finalising your design please request a certifiied installation drawing.
Dimensions in mm

The version A10VM/E...D („prepared for speed pickup“) comprises gearing around the rotary unit.

In this case, the rotating cylinder barrel can provide a speed dependent signal, which can be picked up by a suitable sensor and processed for further evaluation. The sensor port will be plugged for delivery.
This preparation for speed pickup does not include the necessary working parts. They must be ordered separately as a kit with a corresponding part number.
Inductive speed sensor ID R 18/20-L250 (see RE 95130) and mounting parts (spacer and 2 seals per kit) can be ordered separately under the following part numbers:

Size	Part Nr.	Number of teeth
28	R902428802	48
45	R902437557	48
63	R902428802	56
85	in preparation	

Circuit diagram

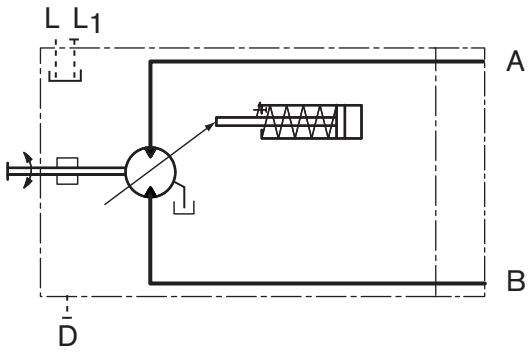

Dimension port D

A10VM 28

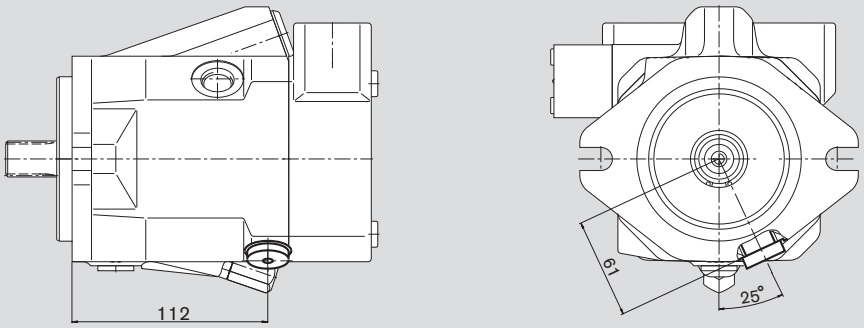

A10VM 45, 63 and 85

Size	A1	A2	A3
45	96	69.2	45°
63	140.5	71	57.5°
85	130	91.3	45°

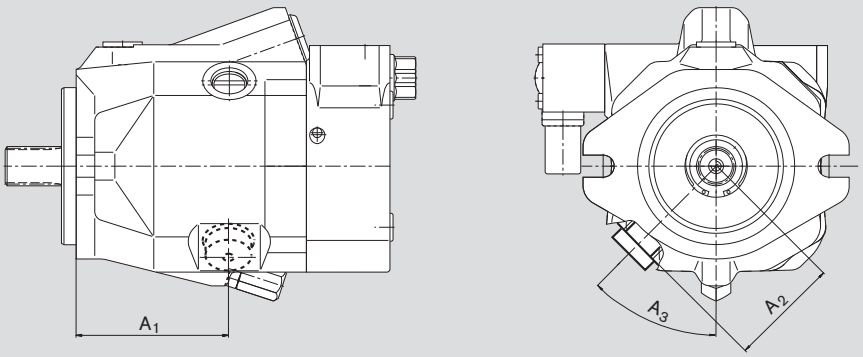

A10VE 45

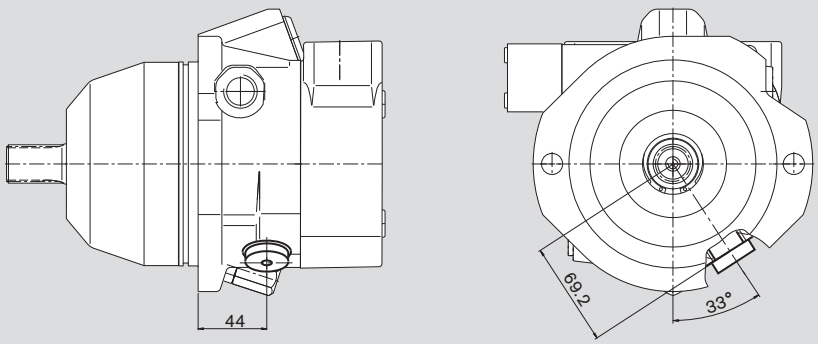

Mounting position

The motor housing must be filled during start up and operation. The drain line must be arranged, so that the housing cannot empty itself when the motor is at standstill. The end of the drain line must enter the tank below the minimum fluid level.

In all installation positions the highest case drain port must be used to fill the housing and to connect the drain line.

In case of a vertical installation please consult us.

A10VM

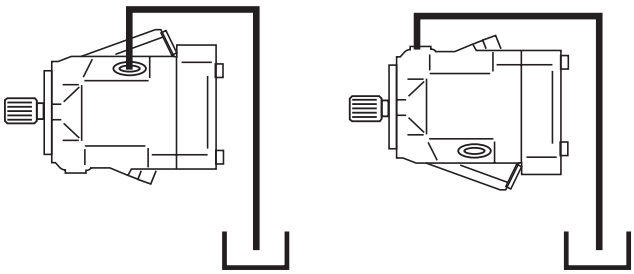

A10VE

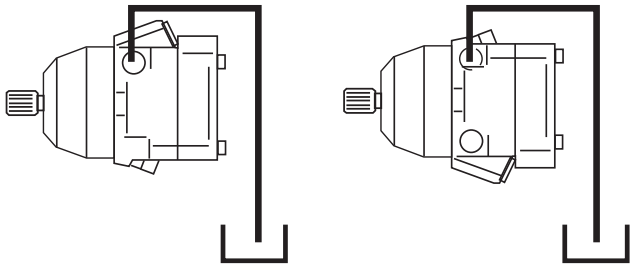

General instructions

– The A10VM/VE is designed for operation in open and closed circuits

– Systems design, installation and commissioning requires trained technicians or tradesmen.

– Be sure to read the entire operating instructions throughly and completely befor using the axial piston unit. If necessary, request them at Rexroth.

– All hydraulic ports can only be used for the fastening of hydraulic service lines.

– During and shortly after operation of a axial piston unit the housing and especially a solenoid can be extremely hot, avoid being burned; take suitable safety measures (wear protective clothing).

– Dependent on the operating conditions of the axial piston unit (operating pressure, fluid temperature) deviations in the performance curves can occur.

– Pressure ports:
All materials and port threads are selected and designed in such a manner, that they can withstand the maximum pressure.
The machine and system manufacturer must ensure, that all connecting elements and hydraulic lines are suitable for the actual operating pressures.

– Pressure cut off and pressure control are not suitable for providing system protection against excessive pressures. A suitable overall main line relief valve must be incorporated.

– All given data and information must be adhered to.

– The following tightening torques are valid:

- Female threads in the axial piston unit:
the maximum permissible tightening torques M_{GMax} are maximum values for the female threads in the pump casting and may not be exceeded. Value see table below.

- Fittings:
please comply with the manufacturer‘s information regarding the max. permissible tightening torques for the used fittings.

- Fastening bolts:
for fastening bolts to ISO 68 we recommend to check the permissible tightening torques in each individual case to VDI 2230.

- Plugs:
for the metal plugs, supplied with the axial piston unit the following min. required tightening torques M_V apply (see table).

Threaded port sizes		Maximum permissible tightening torque of the threaded holes $M_{G\ max}$	Requiered tightening torque of the locking screws M_V	WAF hexagon socket of the locking screws
7/8-14 UNF-2B	ISO 11926	240 Nm	127 Nm	3/8 in
7/16-20UNF-2B	ISO 11926	40 Nm	15 Nm	3/16 in
3/4-16 UNF-2B	ISO 11936	160 Nm	62 Nm	5/16 in
1 1/16-12 UNF-2B	ISO 11926	360 Nm	147 Nm	9/16 in
M14x1,5	DIN 3852	80 Nm	35 Nm	6 mm
M16x1,5	DIN 3852	100 Nm	50 Nm	8 mm
M18x1,5	DIN 3852	140 Nm	60 Nm	8 mm
M22x1,5	DIN 3852	210 Nm	80 Nm	10 mm
M27x2	DIN 3852	330 Nm	135 Nm	12 mm

Reversible axial piston variable motor A10VER series 52 for hydrostatic fan drives

- Sizes 30 to 45
- Nominal pressure 280 bar
- Maximum pressure 350 bar
- Open circuit

3

Features

- Variable motor with axial piston rotary group in swash-plate design for hydrostatic fan drives in open circuits
- The output speed is proportional to the inlet flow
- The output torque increases proportionally with the pressure difference between the high- and low-pressure sides and increasing displacement
- Specially developed for hydrostatic fan drives
- The A1OVER variable motor is equipped with a rotary group of the overcenter type with a maximum displacement of +/- 100% $V_{g\,max}$. This permits reversing operation without the need for costly additional components for air flow reversal and the cleaning of contaminated coolers, and thus achieves fuel savings by means of improved cooling performance.
- The energy efficiency of hydraulic fan drives is increased due to the elimination of external reversing valves.
- Stable storage for long service life
- High permissible output speed
- Favorable power-to-weight ratio – compact dimensions
- Low noise

Contents

Ordering code	2
Hydraulic fluids	3
Operating pressure range	5
Technical data	6
EZ. – Two-point control, electric	8
Dimensions sizes 30, 37 and 45	9
Anti cavitation valve	11
Speed pickup	12
Connector for solenoids	13
Installation instructions	14
Project planning notes	16
Safety instructions	16

RE 91 106/09 2010, Bosch Rexroth AG

Ordering code

01	02	03	04	05		06	07		08	09	10	11	12	13	14
A10V	**E**	**R**			**/**	**52**	**R**	**–**	**V**		**F**				

Axial piston unit

		30	37	45	
01	Variable swashplate design, nominal pressure 280 bar, maximum pressure 350 bar	●	●	●	**A10V**

Operation mode

02	Motor, plug-in version, open circuit	**E**
03	Reversible +/– 100%	**R**

Size (NG)[1)]

04	For geometric displacement, see table of values, page 6	**30**	**37**	**45**

Control device

05	Two-point control	U = 12 V	with shifting time orifice	●	●	●	**EZ6**
	electric with switching solenoid	U = 24 V	with shifting time orifice	●	●	●	**EZ7**

Series

06	Series 5, Index 2	**52**

Direction of rotation[2)]

07	Viewed on drive shaft	clockwise (cooling operation)	**R**

Sealing material

08	FKM (fluoroelastomer)	**V**

Drive shaft

09	Conical shaft with woodruff key and UNF threaded bolt	●	●	●	**C**
	Conical shaft with woodruff key and metric threaded bolt	●	●	●	**Y**

Mounting flanges

10	Special flange similar to SAE J744 101-2 (B)	2-hole	**F**

Working port

11	SAE flange port fastening thread, metric	same side	●	●	●	**10N00**
	Threaded port, metric	same side	○	○	○	**16N00**
	SAE flange port fastening thread, UNF	same side	●	●	●	**60N00**
	Threaded port, UNF	same side	○	○	○	**66N00**

Valves

12	without	●	●	●	**0**
	integrated anti cavitation valve	●	●	●	**2**
	integrated anti cavitation valve and pressure relief valve	○	○	○	**4**

Speed sensing

13	without speed sensing	●	●	●	
	Inductive speed sensor mounted DSA[3)]	○	○	○	**B**
	Inductive speed sensor mounted DSM[3)]	○	○	○	**M**

Connector for solenoids

14	DEUTSCH – molded connector, 2-pin – without suppressor diode (for electric controls)	**P**

● = Available ○ = On request – = Not available

Note
Observe the project planning notes on page 16 or the project planning and commissioning instructions 90363.

1) Additional sizes available on request
2) Additional directions of rotation available on request
3) Specify ordering code of sensor in accordance with data sheet 95132 – DSM or 95133 – DSA separately and observe the requirements for the electronics.

Hydraulic fluids

The A10VER variable motor is designed for operation with HLP mineral oil according to DIN 51524. For more hydraulic fluids please contact us.
Application instructions and requirements for hydraulic fluids should be taken from the following data sheets before the start of project planning:

- 90220: Hydraulic fluids based on mineral oils and related hydrocarbons
- 90221: Environmentally acceptable hydraulic fluids

Details regarding the selection of hydraulic fluid
The hydraulic fluid should be selected so that the operating viscosity in the operating temperature range is within the optimum range (v_{opt}, see selection diagram).

Note
At no point on the component may the temperature be higher than 115 °C. The temperature difference specified in the table is to be taken into account when determining the viscosity in the bearing.
If the above conditions cannot be maintained due to extreme operating parameters, please contact the responsible member of staff at Bosch Rexroth.

Viscosity and temperature of hydraulic fluids

	Viscosity	Temperature[1)]	Comment
Cold start	$v_{max} \leq 1600$ mm²/s	$\theta_{St} \geq -25$ °C	$t \leq 1$ min, without load ($p \leq 30$ bar), $n \leq 1{,}000$ rpm
permissible temperature difference		$\Delta T \leq 25$ K	between axial piston unit and hydraulic fluid
Warm-up phase	$v < 1600$ to 400 mm²/s	$\theta = -25$ °C to -10 °C[1)]	Observe the detailed information on operation at low temperatures, see data sheet 90300-03-B
Continuous operation	$v = 400$ to 10 mm²/s		This corresponds, for example on the VG 46, to a temperature range of +5 °C to +85 °C (see selection diagram page 3)
		$\theta = -25$ °C to +110 °C	measured at port **L** Observe the permissible temperature range of the shaft seal (ΔT = approx. 5 K between the bearing/shaft seal and port **L**)
	$v_{opt} = 36$ to 16 mm²/s		Range of optimum operating viscosity and efficiency
Short-term operation	$v_{min} \geq 7$ mm²/s		$t < 1$ min, $p < 0.3 \cdot p_{nom}$

▼ **Selection diagram**

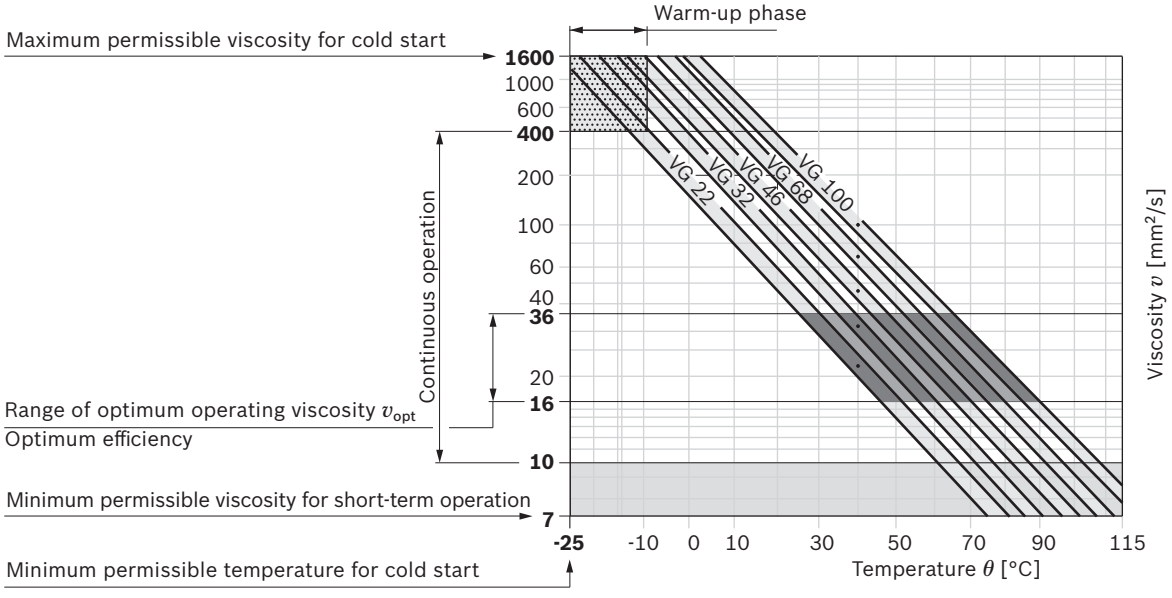

1) At temperatures from -40° C to -25° C please contact us

Ordering code

Filtration of the hydraulic fluid

Finer filtration improves the cleanliness level of the hydraulic fluid, which increases the service life of the axial piston unit.
A cleanliness level of at least 20/18/15 is to be maintained according to ISO 4406.
At very high hydraulic fluid temperatures (90 °C to maximum 115 °C), at least cleanliness level 19/17/14 according to ISO 4406 is necessary.
Please contact us if the above classes cannot be observed.

Operating pressure range

Pressure at service line port B		Definition
Nominal pressure p_{nom}	280 bar absolute	The nominal pressure corresponds to the maximum design pressure. **The series control of motors is not permissible.**
Maximum pressure p_{max}	350 bar absolute	The maximum pressure corresponds the maximum working pressure within the single operating period. The sum of the single operating periods must not exceed the total operating period.
Single operating period	2.5 ms	
Total operating period	300 h	
Minimum pressure $p_{MD\ abs}$ (high-pressure side)	20 bar absolute	Minimum pressure on the high-pressure side (**B**) which is required in order to prevent damage to the axial piston unit.
Rate of pressure change $R_{A\ max}$	16000 bar/s	Maximum permissible rate of pressure build-up and reduction during a pressure change over the entire pressure range.
Pressure at low-pressure port A		
Minimum pressure $p_{ND\ min}$ Standard	2 bar absolute	Minimum pressure at low-pressure port **A** (outlet) that is required in order to avoid damage to the axial piston unit.
Maximum pressure $p_{ND\ max}$	10 bar absolute[1)]	
Leakage pressure at port L		
Maximum pressure $p_{L\ max}$ Operation as a motor, open circuit	2 bar absolute	

▼ **Rate of pressure change** $R_{A\ max}$

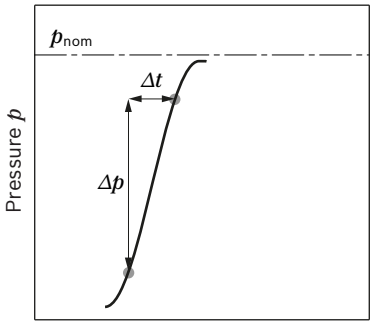

▼ **Pressure definition**

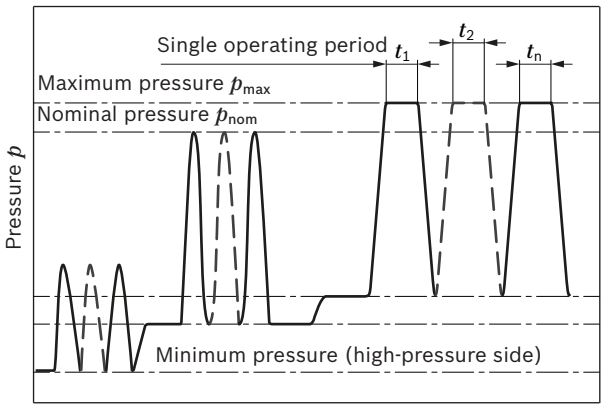

Total operating period = $t_1 + t_2 + ... + t_n$

1) Higher pressures on request

Note
Working pressure range valid when using hydraulic fluids based on mineral oils. Please contact us for values for other hydraulic fluids.

Flow direction

Direction of rotation Motor with unchanged pressure side B	at $V_{g\ max}$ + + 100%	$V_{g\ max}$ – - 100%
(de-energized) clockwise	**B** to **A**	
(energized) counter-clockwise		**B** to **A**

Technical data

Size		NG		30	37	45
Displacement geometric, per revolution		+ 100% $V_{g\,max}$	cm^3	30	37	45
		– 100% $V_{g\,max}$	cm^3	30	37	45
Maximum rotational speed[1]	at $V_{g\,max}$	n_{nom}	rpm	2400	2200	2000
Minimum rotational speed[1]	at permanent operation	n_{nom}	rpm	250	250	250
Torque	at $V_{g\,max}$ and Δp = 280 bar	T	Nm	133.5	165	200
Rotary stiffness of drive shaft	C	c	Nm/rad	32380	32380	32380
	Y	c	Nm/rad	32380	32380	32380
Moment of inertia for rotary group		J_{TW}	kgm^2	0.0033	0.0033	0.0033
Maximum angular acceleration[2]		α	rad/s^2	4000	4000	4000
Case volume		V	l	0.7	0.7	0.7
Weight without through drive (approx.)		m	kg	18	18	18

Determining the operating characteristics			
Inlet flow	q_v	$= \frac{V_g \times n}{1000 \times \eta_v}$	[l/min]
Torque	T	$= \frac{1.59 \times V_g \times \Delta p \times \eta_{hm}}{100}$	[Nm]
or	T	$= T_K \times \Delta p \times \eta_{hm}$	
Power	P	$= \frac{2 \pi \times T \times n}{60000} = \frac{q_v \times \Delta p \times \eta_t}{600}$	[kW]
Output speed	n	$= \frac{q_v \times 1000 \times \eta_v}{V_g}$	[rpm]

Key

V_g = Displacement per revolution [cm^3]
Δp = Differential pressure [bar]
n = Rotational speed [rpm]
η_v = Volumetric efficiency
η_{hm} = Hydraulic mechanical efficiency
η_t = Total efficiency ($\eta_t = \eta_v \times \eta_{hm}$)
T_K = Torque constant

Note

- Theoretical values, without efficiency and tolerances; values rounded
- Exceeding the maximum or falling below the minimum permissible values can lead to a loss of function, a reduction in operational service life or total destruction of the axial piston unit. Bosch Rexroth recommends testing the load by means of experiment or calculation / simulation and comparison with the permissible values.

1) The values apply:
– At absolute pressure p_{abs} = 2 bar at low-pressure port **A**
– For the optimal viscosity range of v_{opt} = 36 to 16 mm^2/s
– For hydraulic fluid based on mineral oils

2) The data are valid for values between the minimum necessary and the maximum permissible drive speeds. Valid for external excitation (e. g. diesel engine 2 to 8 times rotary frequency, cardan shaft twice the rotary frequency). The limit value is only valid for a single pump. The load capacity of the connecting parts must be considered.

Permissible radial and axial forces of the drive shafts

Size		NG		30	37	45
Maximum radial force at a/2	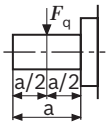	$F_{q\ max}$	N	1500	1500	1500
Maximum axial force	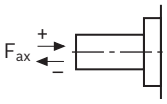	$\pm F_{ax\ max}$	N	1500	1500	1500

Note

- The values given are maximum values and do not apply to continuous operation. For drives with radial loading (pinion, V-belt drives), please contact us!

3

EZ. – Two-point control, electric

The variable motor is set to $V_{g\,max}$ +100% or $V_{g\,max}$ –100% by actuating the solenoid of the control valve. When de-energized, the axial piston units swivels to $V_{g\,max}$ +100%, when energized, to $V_{g\,max}$ –100%.
The response time is extended via the in-built orifice, thus enabling smooth swiveling.

With each direction of rotation of the motor, the control pressure is taken at the high-pressure side **B**.

▼ **Characteristic curve EZ**

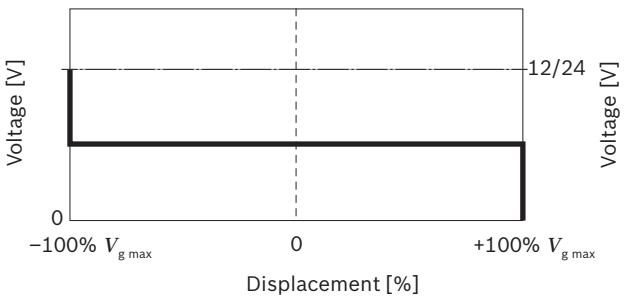

Influencing the swivel position

Swivel direction + 100%		**Swivel cradle position**
De-energized	≙	$V_{g\,max+}$
Swivel direction – 100%		
Energized	≙	$V_{g\,max-}$

Note
Observe the project planning notes on page 16 or the project planning and commissioning instructions 90363.

▼ **Circuit diagram EZ6/EZ7**

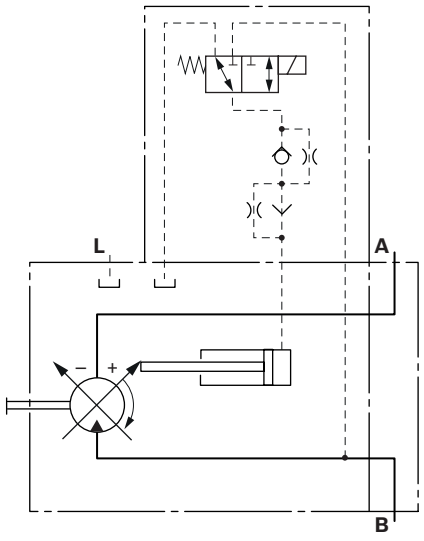

Solenoid data

Technical data, solenoids	**EZ6**	**EZ7**
Nominal voltage	12 V DC	24 V DC
Nominal current (at 20 °C)	1.5 A	0.8 A
Duty cycle	100%	100%
Type of protection: see connector version page 13		
Ambient temperature range -20 °C to +60 °C Please contact us if these temperatures cannot be observed.		

Dimensions sizes 30, 37 and 45

EZ6/EZ7 – Two-point control, electrically with DEUTSCH connector, clockwise rotation, series 52

▼ **Port plate 10N00/60N00**

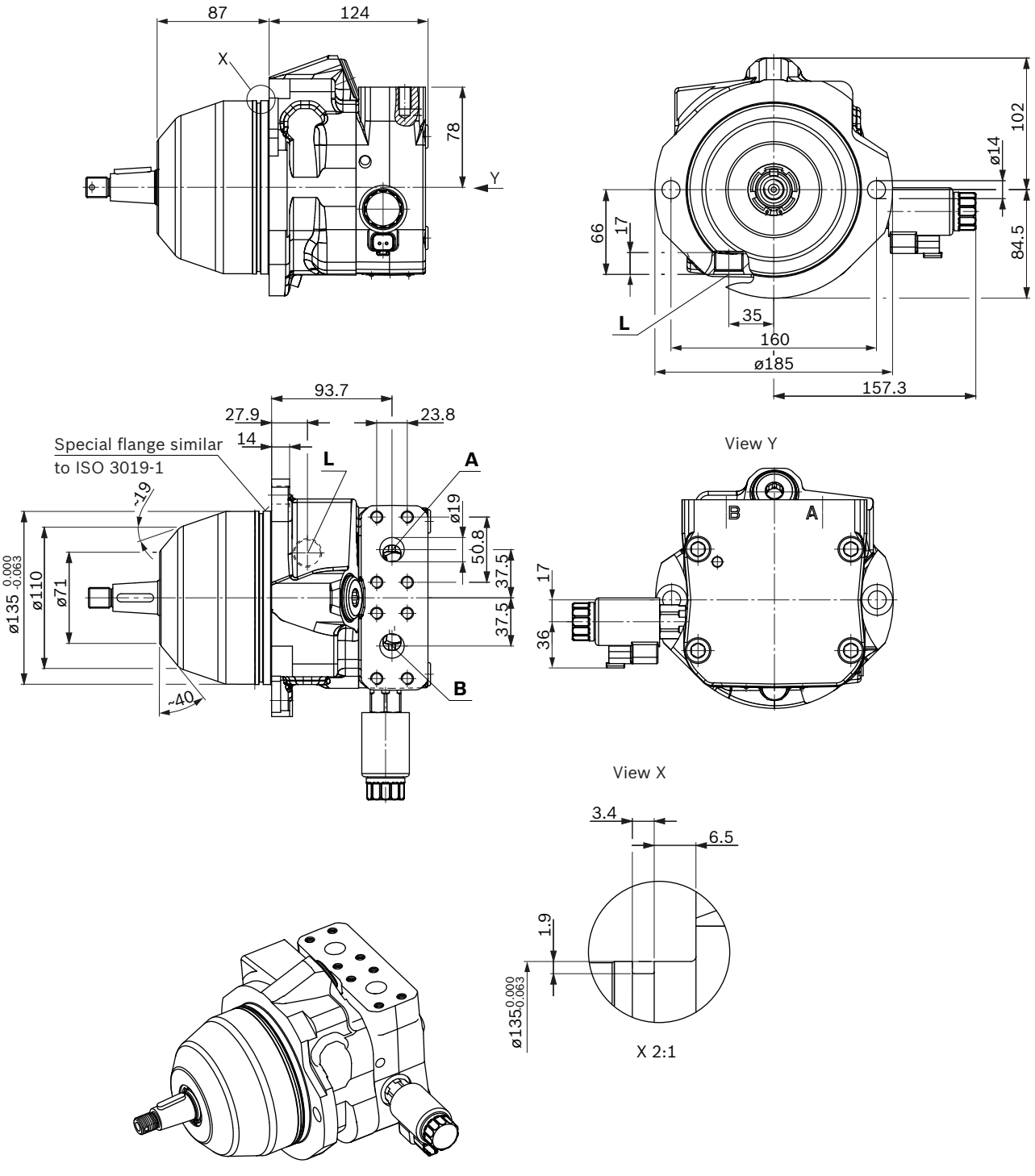

▼ **Tapered shaft with shaft key, metric threaded bolt**

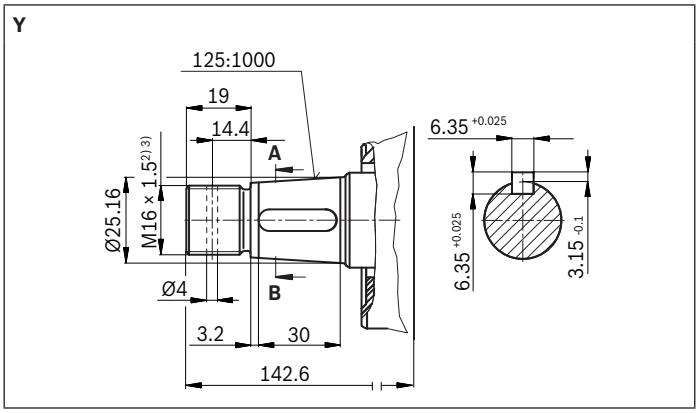

▼ **Tapered shaft with shaft key, imperial threaded bolt**

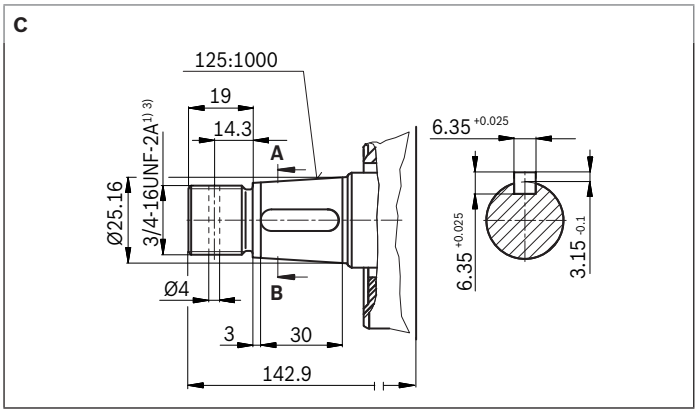

Ports		Standard	Size[3]	$p_{max\ abs}$ [bar][4]	State[7]
Port plate 10					
A	Service line port (high-pressure series) Fastening thread	SAE J518[5] DIN 13	3/4 in M10 × 1.5; 17 deep	10	O
B	Service line port (high-pressure series) Fastening thread	SAE J518[5] DIN 13	3/4 in M10 × 1.5; 17 deep	350	O
L	Drain port	ISO 11926[6]	7/8-14UNF-2B; 17 deep	2	O
Port plate 60					
A	Service line port (high-pressure series) Fastening thread	SAE J518 ASME B1.1	3/4 in 3/8-16UNC-2B; 21 deep	10	O
B	Service line port (high-pressure series) Fastening thread	SAE J518 ASME B1.1	3/4 in 3/8-16UNC-2B; 21 deep	350	O
L	Drain port	ISO 11926[6]	7/8-14UNF-2B; 17 deep	2	O

1) Thread according to ASME B1.1
2) Thread according to DIN 13
3) For the maximum tightening torques, see instruction manual.
4) Depending on the application, temporary pressure peaks can occur. Keep this in mind when selecting measuring devices and fittings.
5) Metric fastening thread is a deviation from standard
6) The spot face can be deeper than as specified in the standard.
7) O = Must be connected (plugged on delivery)
X = Plugged (in normal operation)

Anti cavitation valve

Without pressure cut-off
Order option ...N002
When switching off the system, the anti cavitation valve ensures the motor of heavy-duty drives (e.g. hydrostatic fan drives) is supplied with hydraulic fluid until it comes to a standstill.
The valve is integrated in the port plate.

Note
- Observe the direction of rotation of the unit during project planning.
- The standard rotation of direction is clockwise. Please contact us regarding counter-clockwise rotation.

The external unit dimensions correspond to the standard version, see the unit dimensions for the length dimensions.

▼ **Circuit diagram**

Clockwise rotation

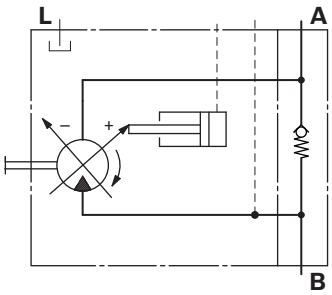

Speed pickup

Order option ...B or M

A signal proportional to the motor speed can be generated with the fitted DSA (B)/DSM (M) speed sensor. The DSA/DSM sensor measures the speed and/or direction of rotation. Ordering code, technical data, dimensions, and details on the connector, plus safety information about the sensor can be found in the relevant data sheet 95132 – DSM and 95133 – DSA.

The sensor is mounted on the port provided for this purpose with a mounting bolt.

▼ **Circuit diagram**

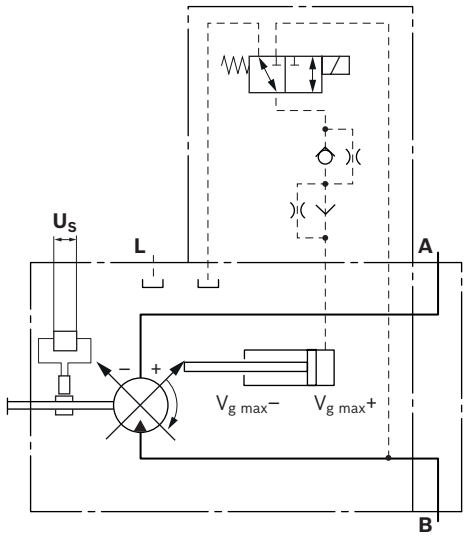

▼ **Dimensions**

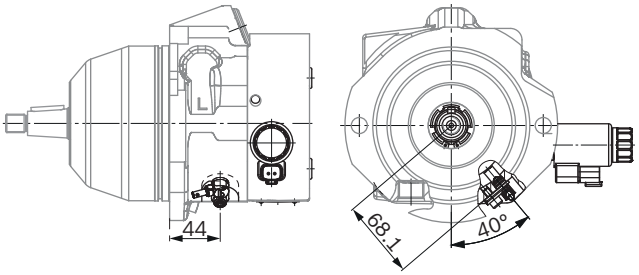

Connector for solenoids

DEUTSCH DT04-2P-EP04

Molded connector, 2-pin, without bidirectional suppressor diode

The following type of protection ensues with a mounted mating connector:

- IP67 (DIN/EN 60529) and
- IP69K (DIN 40050-9)

▼ **Switching symbol**

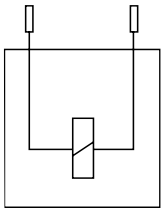

▼ **Mating connector DEUTSCH DT06-2S-EP04**

Consisting of	DT designation
1 housing	DT06-2S-EP04
1 wedge	W2S
2 sockets	0462-201-16141

The mating connector is not included in the scope of delivery. This can be supplied by Bosch Rexroth on request (material number R902601804).

Note

If necessary, you can change the connector orientation by turning the solenoid housing.

The procedure is defined in the instruction manual.

System solution for hydrostatic fan drives with reversing function

AFC30 software

The BODAS AFC30 is a standard software solution integrated in the RC4-5/30 control unit from Rexroth for controlling hydrostatic fan drives with fixed or variable hydraulic pumps. The AFC30 is designed to control a fan drive in an open hydraulic circuit. The performance requirement of the fan can be modified for up to 6 temperature signals (analog//J1939). The AFC30 can be used with 12 V and 24 V systems. Since the AFC30 provides cooling capacity according to requirements, fuel consumption is significantly reduced compared with fan drive systems that are not proportionally controlled.

Further information on this can be found in data sheets

- 95362 (application software fan speed control AFC30) and
- 95205 (BODAS controller RC4-5, series 30)

Installation instructions

General

The axial piston unit must be filled with hydraulic fluid and air bled during commissioning and operation. This must also be observed following a longer standstill as the axial piston unit may empty via the hydraulic lines.
The drain in the housing area must be discharged to the reservoir via the highest available tank port (**L**). If this is not possible, separate drain lines must be installed if necessary. To achieve favorable noise values, decouple all connecting lines using elastic elements and avoid above-reservoir installation.
In all operating conditions, the drain line must flow into the reservoir below the minimum fluid level.

Note

In certain installation positions, an influence on the control characteristic can be expected. Gravity, dead weight and case pressure can cause minor shifts in characteristics and changes in response time.

For key, see page 15.

Installation Position

See the following examples **1** to **4**.
Additional installation positions are available upon request.
Recommended installation position: **2**

Below-reservoir installation (standard)

Below-reservoir installation is when the axial piston unit is installed outside of the reservoir below the minimum fluid level.

Installation Position		Air bleeding	Filling
1	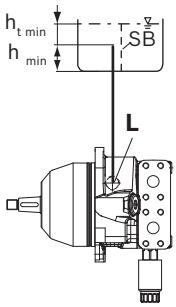	–	**L**
2	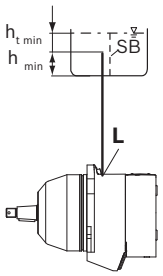	–	**L**

Above-reservoir installation

Above-reservoir installation means that the axial piston unit is installed above the minimum fluid level of the reservoir.

Installation position	Air bleeding	Filling
3 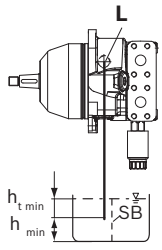	–	L
4 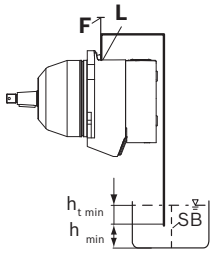	F	L

Key	
F	Filling / air bleeding
L	Tank port
SB	Baffle (baffle plate)
$h_{t\,min}$	Minimum required immersion depth (200 mm)
h_{min}	Minimum required distance to reservoir bottom (100 mm)

Note

Port **F** is part of the external piping and must be provided by the customer to make filling and air bleeding easier.

Project planning notes

- The A10VER variable motor is designed for fan drives used in open circuits.
- The project planning, installation and commissioning of the axial piston unit require the involvement of qualified skilled personnel.
- Before using the axial piston unit, please read the corresponding instruction manual completely and thoroughly. If necessary, request it from Bosch Rexroth.
- Before finalizing your design, request a binding installation drawing.
- The specified data and notes must be observed.
- Depending on the operating conditions of the axial piston unit (working pressure, fluid temperature), the characteristic curve may shift.
- Preservation: Our axial piston units are supplied as standard with preservative protection for a maximum of 12 months. If longer preservative protection is required (maximum 24 months), please specify this in plain text when placing your order. The preservation periods apply under optimal storage conditions, details of these conditions can be found in the data sheet 90312 or the instruction manual.
- Not all variants of the product are approved for use in safety functions according to ISO 13849. Please consult the responsible contact person at Bosch Rexroth if you require reliability parameters (e.g. $MTTF_d$) for functional safety.
- Depending on the type of control used, electromagnetic effects can be produced when using solenoids. When a direct current is applied, solenoids do not cause electromagnetic interference nor is their operation impaired by electromagnetic interference.
  Other behavior can result when a modulated direct current (e.g. PWM signal) is applied. Potential electromagnetic interference for persons (e.g. persons with a pacemaker) and other components must be tested by the machine manufacturer.
- Pressure controllers are not safeguards against pressure overload. A pressure relief valve is to be provided in the hydraulic system.
- Working ports:
  - The ports and fastening threads are designed for the specified maximum pressure. The machine or system manufacturer must ensure that the connecting elements and lines correspond to the intended operating conditions (pressure, flow, hydraulic fluid, temperature) and the necessary safety factors.
  - The working ports and function ports can only be used to accommodate hydraulic lines.
- Further specific information on this product can be found in the project planning note 90363.

Safety instructions

- During and shortly after operation, there is a risk of burning on the axial piston unit and especially on the solenoids. Take appropriate safety measures (e.g. by wearing protective clothing).
- Moving parts in control and regulation systems (e.g. valve spools) may in certain circumstances become stuck in an undefined position due to contamination (e.g. contaminated hydraulic fluid, abrasion or residual dirt from components). As a result, the hydraulic fluid flow or torque build-up of the axial piston unit will no longer respond correctly to the operator's commands. Even the use of different filter cartridges (external or internal inlet filter) will not rule out a fault but merely reduce the risk. The machine/system manufacturer must check whether additional measures on the machine are required for the relevant application in order to bring the powered load into a safe position (e.g. safe stop) and ensure all appropriate measures are taken.

Axial piston motors
Accessories

Designation	Type	Size	Series	Data sheet	Page
Counterbalance valve for travel drives, winch drives and turas drives	BVD	20, 25	41	95522	637
Counterbalance valve for winch drives	BVE	25	51	95525	649
Counterbalance valve	BVD/BVE	32	51	95528	661

Counterbalance Valve BVD

Data sheet

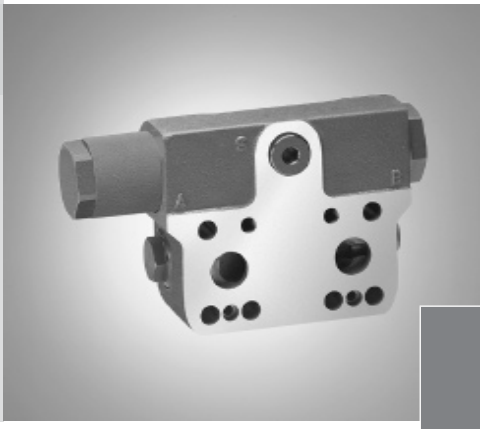

Series 41
Size NG20, 25
Nominal pressure 350 bar
Peak pressure 420 bar
for travel drives, winch drives and track drives

Contents

Ordering Code / Standard Program	2
Design and Safety Instructions	4
Technical Data	4
Operation	6
Dimensions, Size 20	8
Dimensions, Size 25	9
Fixing the Counterbalance Valve	10
Port Types	11
Cross-References	11
General Instructions	12

Features

- Space-saving installation due to compact design and direct mounting on A2FM(E) and A6VM axial piston motors (series 63)
- Available as a complete set with A2FM(E) and A6VM axial piston motors (series 63) and GFT gear units; test stand run as standard.
- Standard service line ports according to SAE J518
- Integrated brake release valve, with and without pressure reduction
- High efficiency due to low flow resistance
- Easy optimization options during commissioning due to modular design.

Ordering Code / Standard Program

BVD					/	41		–	V				
01	02	03	04	05		06	07		08	09	10	11	12

Valve type

01	Counterbalance valve, double-acting	BVD

Size

02	Flow, max. $q_{v\ max}$ 220 l/min	20
	Flow, max. $q_{v\ max}$ 320 l/min	25

Control range (pressure when brake piston starts/stops opening)

03	7...30 bar (travel drive)	F
	20...40 bar (winch and track drive)	W

Ports (size classification)

04	NG	A2FM/E./.181	A2FE./.171	A6VM./.370	A6VM./.380	
	20	28, 32, 45[1)]				16
		56, 63			55	17
		80, 90			80	27
			107, 125	107		28
	25	107, 125, 160, 180			107, 140, 160	38

Ports for brake release

05	with high pressure	S
	with reduced high pressure 21^{+4} bar (brake release valve)	L

Series

06	Series 4, Index 1	41

Long cover

07	B-side (standard)	B
	A-side	A

Seals

08	FKM (fluor-caoutchouc)	V

Piston version

09	100% of max. flow $q_{v\ max}$ (see size)	01
	75% of max. flow $q_{v\ max}$ (see size)	02
	50% of max. flow $q_{v\ max}$ (see size)	03

Residual opening in piston

10	Without residual opening (obligatory for winches)		K00
	With residual opening	Ø 1.2	K12
		Ø 1.6	K16
		Ø 1.8	K18
		Ø 2.0	K20

[1)] Intermediate plate necessary for all three sizes

Ordering Code / Standard Program

BVD					/	41		–	V				
01	02	03	04	05		06	07		08	09	10	11	12

Damping during closing

11	Throttle pin	Comparative surface area	0.0361 mm²	Designation on pin 25	**D2500**
			0.0520 mm²	3	**D0300**
			0.0836 mm²	38[2])	**D0400**
			0.1762 mm²	55	**D0600**
			0.2798 mm²	69[3])	**D0800**

Flushing cavity

12	Plugged		**S00**
	With orifice (only for A6VM)	Ø 1.2	**S12**
		Ø 1.6	**S16**
		Ø 1.8	**S18**

[2]) Standard for travel drives
[3]) Standard for winch and track drive

Ordering information

When placing the order, the following information is necessary to ensure correct settings at our test stands:

- **Motor ordering code**
- **Counterbalance valve ordering code**
- **Flow**
- **Application (e.g. excavator, winch etc.)**
- **Pressure setting of the secondary pressure relief valves in the motor**

Gear unit and/or counterbalance valve and axial piston motor can be ordered as ready-assembled and tested units.

Type selection (Ordering Code)

Size
depends on the necessary flow rate and the available motor port plates.

Control range
defines the pressure range at which the brake piston starts to open.

For travel drives in wheeled vehicles, use code "F":

The control piston opens at a differential pressure between A and B of 7 bar. In this case, the brake is not operated via the port for brake release on the counterbalance valve.

For winch and track drives, use code "W"

The control piston opens at a differential pressure between A and B of 20 bar. This ensures that the mechanical park brake actuated via the brake release port is fully opened (generally at 18 bar) before the brake piston opens.

Ports
depend on the motor size used.

The line ports A and B on the motor port plates are of different distance and diameter. To choose the appropriate connection, please refer to the table in the ordering code and on page 10.

For A2FM/E, sizes 28, 32 and 45, a intermediate plate is required between motor port plate 181 and the counterbalance valve. This intermediate plate is automatically included when motor and counterbalance valve are ordered as a set.

Brake release
The integrated pressure reduction valve is necessary when the mechanical brake on the gear unit cannot handle the full system pressure.

The maximum permitted brake release pressure must be agreed with the winch manufacturer. The brake release valve limits the high pressure to 21...25 bar (4 bar tolerance). It opens at about 10-14 bar.

Piston version ...
depends on the maximum flow across the counterbalance valve.

If for instance the maximum operational flow is only some 110 l/min while using a size 20 counterbalance valve which features a nominal flow of 220 l/min, then select the 50% control piston (code „03“). This ensures smooth operation.

If the desired flow is not within the range of the pistons supplied, please contact us.

Residual opening in piston ...
ensures soft stopping of wheeled vehicles. In winch applications, any residual opening is prohibited, since otherwise the load would not stay suspended. Therefore select code "K00".

Damping
defines the closing speed of the counterbalance valve.
The higher the value, the faster the valve closes.

For the initial layout (prototype), we recommend the following damping:

- for wheel drives: D0400
- for winches and track drives: D0800

Flushing cavity
supplies motor flushing oil via an internal port. Only available for A6VM.

Design and Safety Instructions

Failure to observe any of the following points can lead to uncontrolled working conditions with serious personal injury and material damage:

- The counterbalance valve does **not** replace the mechanical park brake. Provide appropriate mechanical brake systems.
- Counterbalance valves are only used in open circuit.
- System optimization for the first prototype is recommended with regard to the valve block, axial piston motor, counterbalance valve and park brake.
- The counterbalance valve and main control valve must be matched to one another.
- If a park brake is installed, it must not close until after the counterbalance valve has closed. Otherwise excessive wear will be caused to the brake linings.
- Comply with the maximum control pressure of the park brake. If necessary, use the integrated pressure reduction valve as a brake release valve with reduced high pressure (code "L")
- The counterbalance valve converts the entire kinetic energy/ potential energy into heat during the braking/lowering process. Consequently, ensure sufficient cooler and/or tank capacity.
- Counterbalance valves should be operated in combination with close-by secondary pressure relief valves, in order to protect the motor against pressure spikes. The motor port plates for direct installation of the counterbalance valve (A2FM: plate 181; A2FE: plate 171/181; A6VM: plate 370/380) already contain these secondary pressure relief valves.
- Auxiliary boost pressure at port S of the counterbalance valve reliably reduces the risk of cavitation due to lack of fluid in the low-pressure line. Ensure sufficient boost pressure and flow.
- The axial piston motor and counterbalance valve should always be ordered as a complete set. This ensures optimal matching and combined testing.
- If motor and counterbalance valve are ordered separately, consult our application engineers for the appropriate motor version.

The above safety measures and instructions must be adapted to the application and extended if necessary.

Technical Data

Hydraulic fluid

Please refer to the detailed information in our catalog sheets concerning the choice of hydraulic fluids and application conditions (see cross-references on page 11).

Table of values

Size				20	25
Operating pressure	p	bar	Nominal pressure	350	350
			Peak pressure	420	420
Flow, max.	$q_{v\,max}$	l/min		220	320
Opening pressure of brake piston	p	bar	BVD.F	7	7
			BVD.W	20	20
Pressure at which brake piston finishes opening	p	bar	BVD.F	30	30
			BVD.W	40	40
Pressure reduction valve for brake release (fixed values) Opening pressure	p	bar	BVD...L/	21^{+4}	21^{+4}
			BVD...L/	10^{+4}	10^{+4}
Weight, approx.	m	kg		9	15

Technical Data

Characteristics

Size 20

BVD 20...16 and 20...17
(Service line ports A, B ..... 3/4 in) ———

BVD 20...27 and 20...28
(Service line ports A, B ..... 1 in) — — —

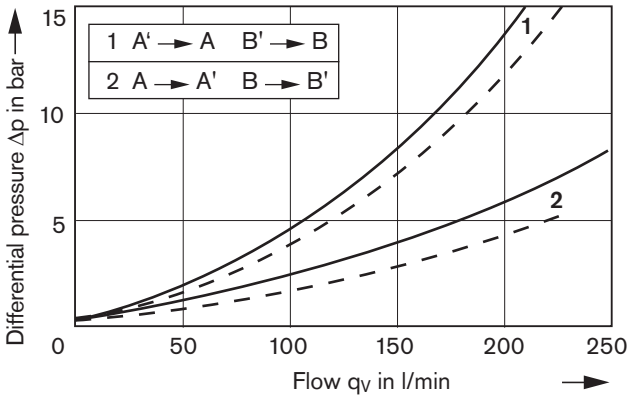

BVD 20 - boost characteristic
(Boost port S ..... M22x1.5)

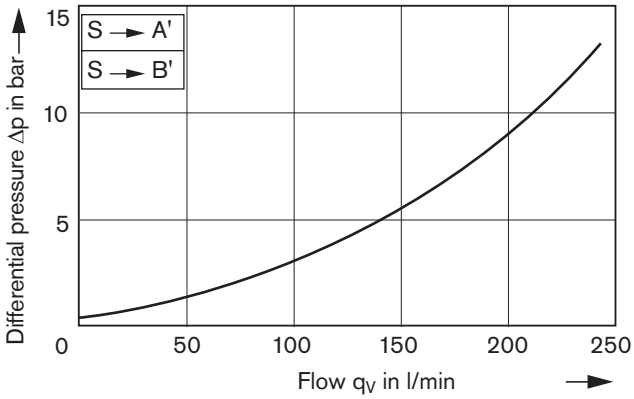

Size 25

BVD 25...38
(Service line ports A, B ..... 1 1/4 in)

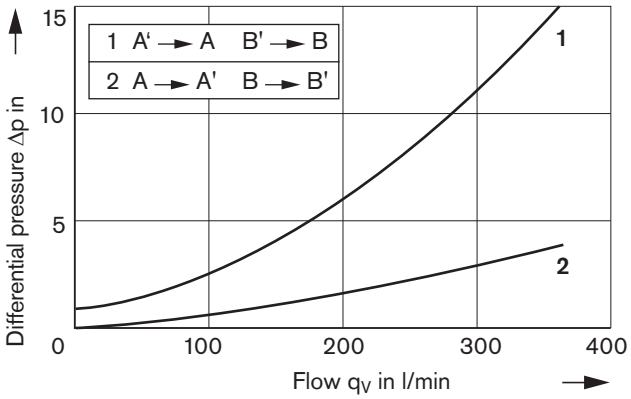

BVD 25 - boost characteristic
(Boost port S ..... M27x2)

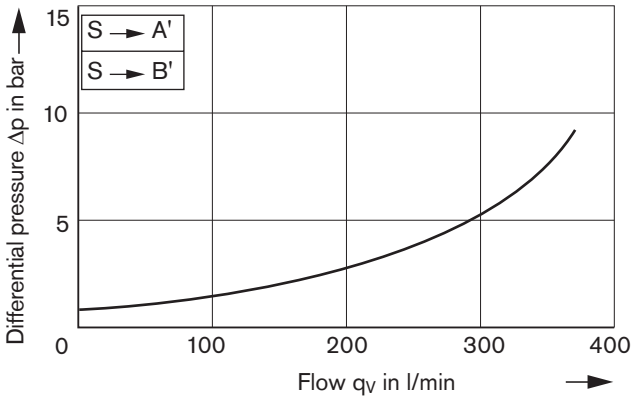

The above specifications are based on:

- Oil viscosity $\nu = 41$ mm²/s
- Oil temperature $\vartheta = 50$ °C
- Brake piston fully open
- Piston code 01 (100% $q_{v\,max}$)

4

Operation

Travel/winch counterbalance valves are designed to reduce the danger of overspeeding and cavitation of axial piston motors in open controls. Cavitation occurs if the motor speed is greater than it should be for the given flow during braking, downhill travel or decrease in motor load.

BVD circuit diagram

Counterbalance valve with shuttle valve and G_{ext} (plugged).

Ordering code designation "S" for brake release via port G_{ext}.

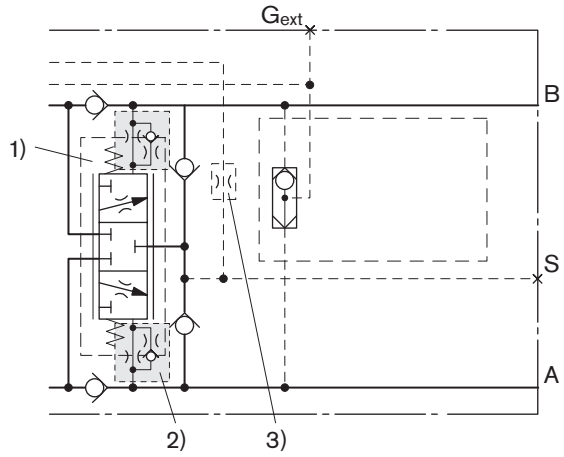

Counterbalance valve with shuttle valve, brake release valve and port Br.

Ordering code designation "L" for brake release port Br.

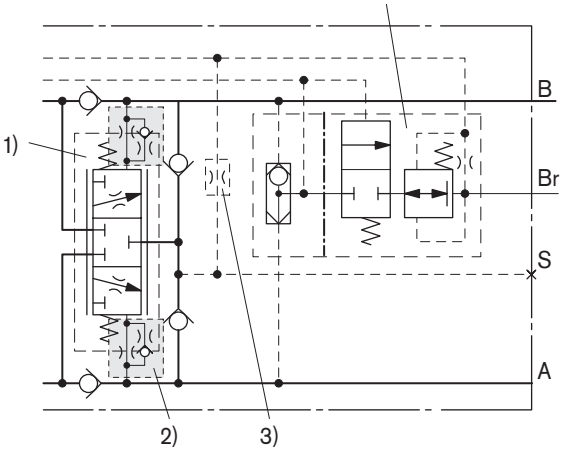

1) Residual opening

Brake piston

with residual opening (K..) without residual opening (K00)

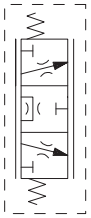

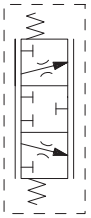

2) Damping

3) Flushing cavity...

...plugged (S00)

...with orifice (S..)

Operation

Circuit diagram – Travel counterbalance valve BVD..F

Application example

Travel drive for wheeled excavators
e.g. A6VM80HA1T/63W-VAB380 + BVD20F27S/41B-V03K16D0400S12

Variable motor with high pressure related control and hydraulic override (HA1T), port plate with integrated pressure-relief valves, prepared for mounting a counterbalance valve (380).

Travel counterbalance valve, size 20 with 50% piston (03) for approx. 110 l/min, internal residual opening in piston for smooth braking (K16),
high damping rate (D0400), internal flushing cavity to motor with 1.2 mm orifice (S12).

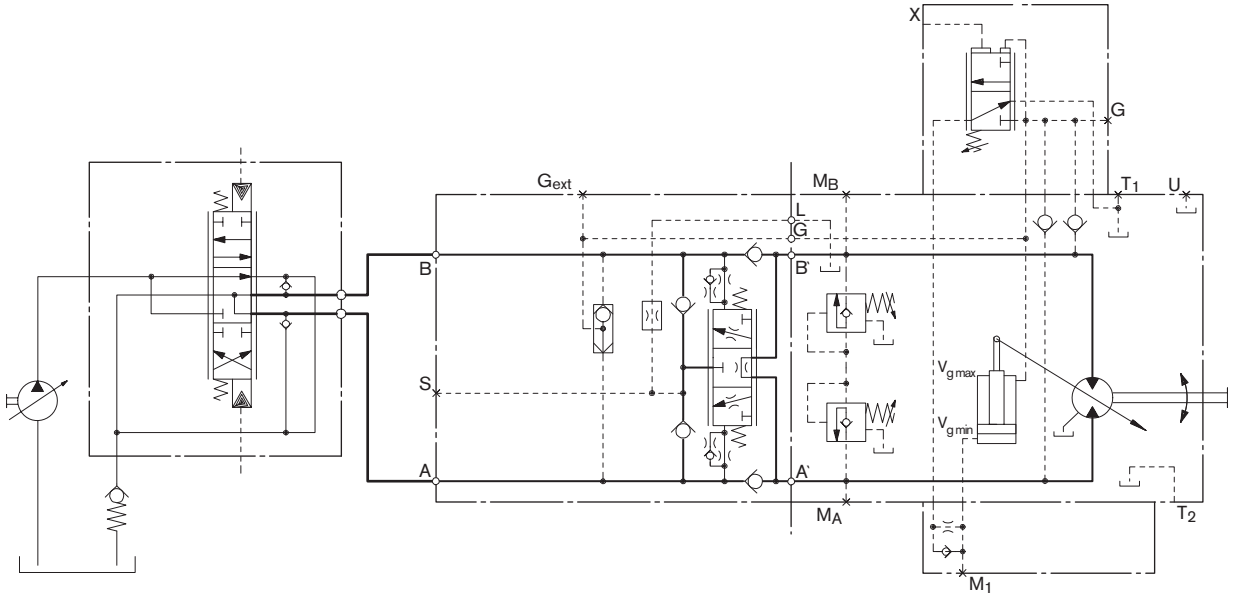

Circuit diagram – Winch counterbalance valve BVD..W

Application example

Winch drive in cranes; track drive in crawler excavators
e.g. A2FE160/61W-VAL181 + BVD25W38L/41B-V02K00D0600S00 mounted on a GFT-W Rexroth winch gear unit

Fixed motor with port plate with integrated pressure-relief valves for mounting a counterbalance valve (181).

Winch counterbalance valve, size 25 with pressure reduction valves for brake release pressure (L), with 75% piston (02) for approx. 240 l/min, without internal residual opening (K00, obligatory for winches), low damping rate (D0800).

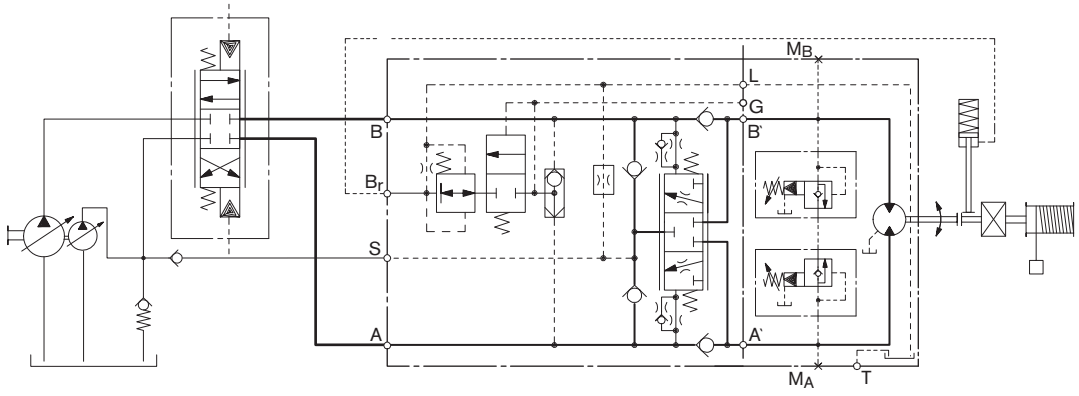

Other A6VM and A2FM/E axial piston motors can alternatively also be used.

Dimensions, Size 20

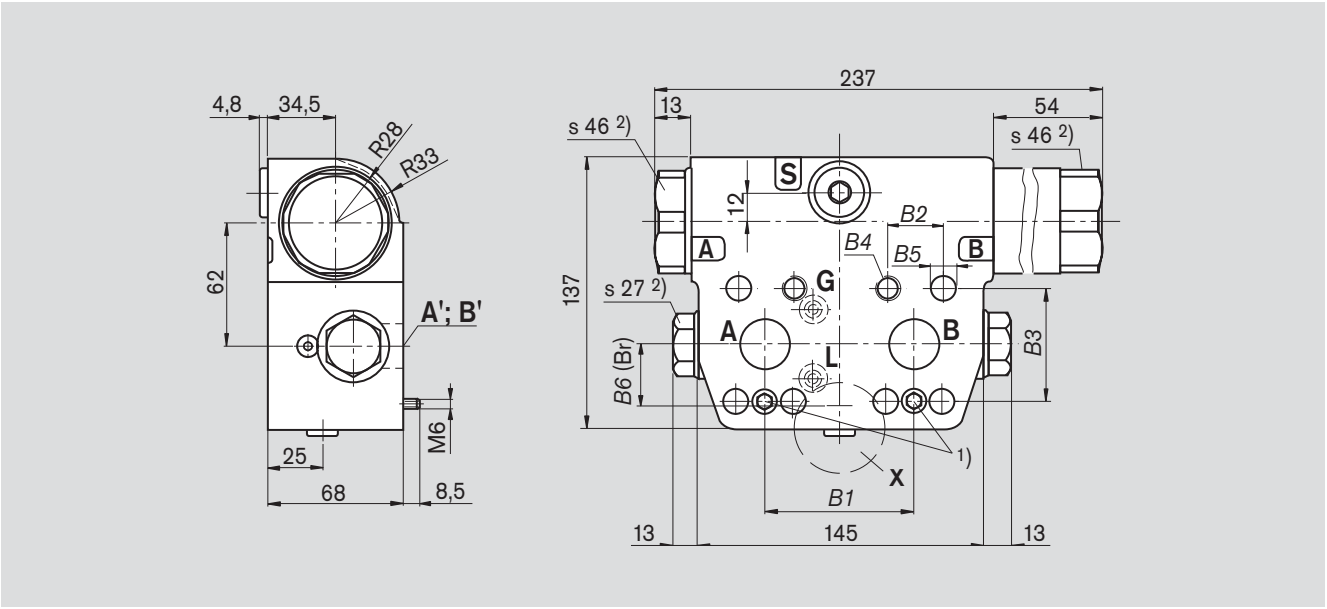

1) Countersink ø 11x6.5 and through-hole ø 6.6 for 2x M6 mounting screws for fixing the counterbalance valve to the motor. In order to prevent incorrect assembly, the mounting screws must be used (included in the delivery contents)

2) Width across flats

Detail X

With shuttle valve and G_{ext} port (code S)

With shuttle valve, brake release valve and Br port (code L)

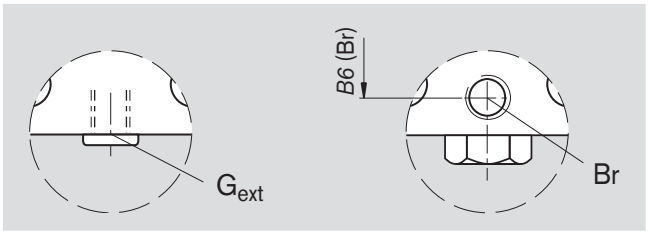

	B1	B2	B3	B4	ØB5	B6
BVD 20...16	66	23.8	50.8	M10x1.5	10.5	25.5
BVD 20...17	75	23.8	50.8	M10x1.5	10.5	27.0
BVD 20...27	75	27.8	57.2	M12x1.75	13	27.0
BVD 20...28	84	27.8	57.2	M12x1.75	13	27.0

Ports

Designation	Operation		Standard	Size 1)	Peak pressure (bar) 2)	Status
A, B	Service line port, fixing thread A/B	Version 16, 17	SAE J518 3) DIN 13	3/4 in M10x1.5; 15 deep	420	O
		Version 27, 28	SAE J518 3) DIN 13	1 in M10x1.75; 16 deep	420	O
S	Boost port		DIN 3852	M22x1.5; 14 deep	30	X
Br	Brake release, reduced high pressure	Version L	DIN 3852	M12x1.5; 12.5 deep	30	O
G_{ext}	Brake release, high pressure	Version S	DIN 3852	M12x1.5; 12.5 deep	420	X
O-rings for connection to mounted axial piston motor						
A′, B′	Service line port	Version 16, 17	AS 568 A	24.99x3.53 (S-FKM90)		
		Version 27, 28	AS 568 A	32.92x3.53 (S-FKM90)		
G	High pressure for A6VM motor HA control (with O-ring)		DIN 3771	9x2 (N-V80G1)		
L	Flushing (with O-ring)		DIN 3771	9x2 (N-V80G1)		

1) Please observe the general instructions for the max. tightening torques on page 12

2) Short-term pressure spikes may occur depending on the application. Please keep this in mind when selecting testers and armatures.

3) Only dimensions according to SAE J518

O = open, must be connected (plugged on delivery)

X = plugged (in normal operation)

Dimensions, Size 25

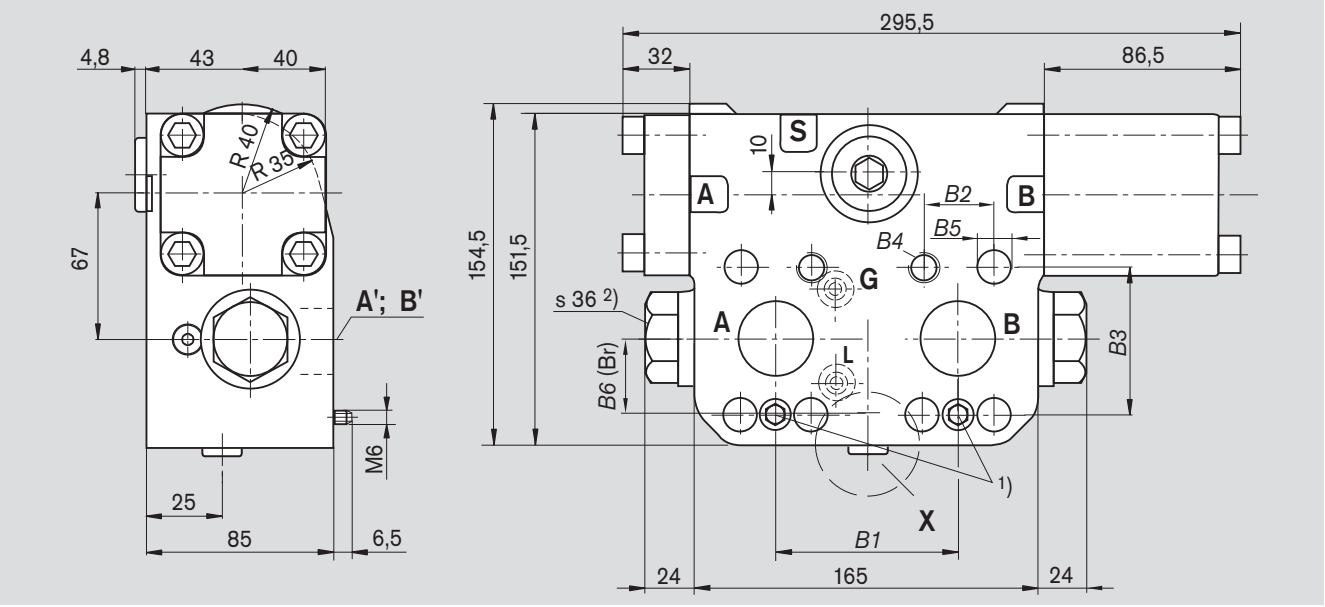

1) Countersink ø 11x6.5 and through-hole ø 6.6 for 2x M6 mounting screws for fixing the counterbalance valve to the motor. In order to prevent incorrect assembly, the mounting screws must be used (included in the delivery contents)

2) Width across flats

Detail X

With shuttle valve and G_{ext} port (code S)

With shuttle valve, brake release valve and Br port (code L)

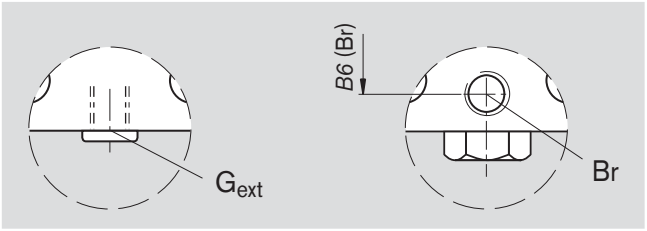

	B1	B2	B3	B4	ØB5	B6
BVD 25...38	84	31.8	66.7	M14x2	15	31.6

Ports

Designation	Operation		Standard	Size 1)	Peak pressure (bar) 2)	Status
A, B	Service line port, fixing thread A/B	Version 38	SAE J518 3) DIN 13	1 1/4 in M14x2; 19 deep	420	O
S	Boost port		DIN 3852	M27x2; 16 deep	30	X
Br	Brake release, reduced high pressure	Version L	DIN 3852	M12x1.5; 12 deep	30	O
G_{ext}	Brake release, high pressure	Version S	DIN 3852	M12x1.5; 12.5 deep	420	X
O-rings for connection to mounted axial piston motor						
A′, B′	Service line port	Version 38	AS 568 A	37.69x3.53 (S-FKM90)		
G	High pressure for A6VM motor HA control (with O-rings)		DIN 3771	9x2 (N-V80G1)		
L	Flushing (with O-ring)		DIN 3771	9x2 (N-V80G1)		

1) Please observe the general instructions for the max. tightening torques on page 12

2) Short-term pressure spikes may occur depending on the application. Please keep this in mind when selecting testers and armatures.

3) Only dimensions according to SAE J518

O = open, must be connected (plugged on delivery)

X = plugged (in normal operation)

Fixing the Counterbalance Valve

When delivered, the counterbalance valve is attached to the motor using 2 tacking screws. Do not remove the tacking screws when connecting the service lines. If the counterbalance valve and motor are delivered separately, the counterbalance valve must first be attached to the motor port plate using the provided tacking screws. In both cases, the final attachment of the counterbalance valve to the motor is by the connectio of the service lines, e.g. using SAE 4-bolt flanges. A total of 6 screws with thread lengths B1+B2+B3 and 2 screws with thread lengths B3+B4 are required.

When tightening the screws, it is imperative that the sequence 1 to 8 (as shown in the adjacent diagram) be adhered to and carried out in two phases.

In the first phase the screws should be tightened to 50% of their tightening torque before being tightened to maximum tightening torque in the second phase (see table below).

Thread	Strength class	Tightening torque in Nm
M10	10.9	75
M12	10.9	130
M14	10.9	205

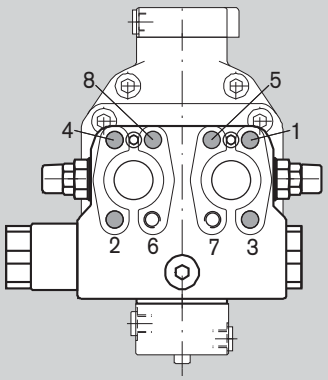

A6VM

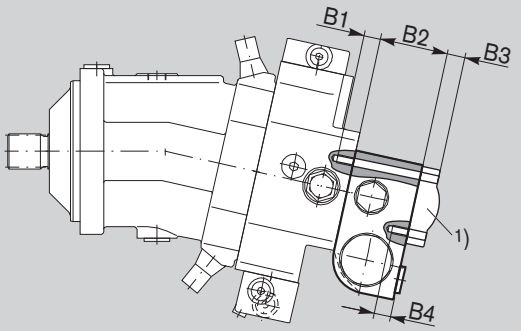

A2FM

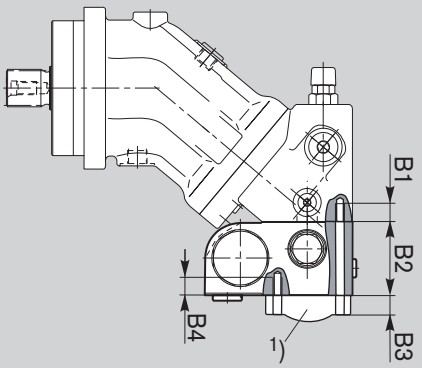

A2FE

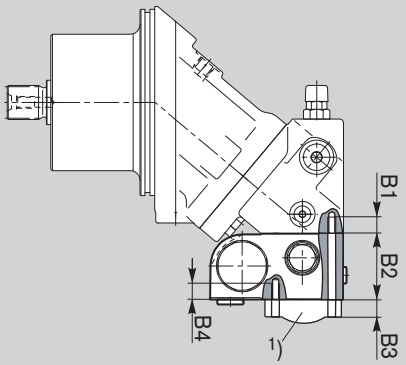

1) Flange, e.g. SAE flange

Axial piston motor	A2FM/E	A2FM/E	A6VM	A2FM/E	A6VM	A2FE	A6VM	A2FM/E	A6VM
NG	28, 32, 45	56, 63	55	80, 90	80	107, 125	107	107, 125, 160, 180	107, 140 160
Dimension B1 1)	M10x1.5 17 deep	M10x1.5 17 deep	M10x1.5 17 deep	M12x1.75 18 deep	M12x1.75 15 deep	M12x1.75 17 deep	M12x1.75 15 deep	M14x2 19 deep	M14x2 19 deep
Dimension B2	78 2)	68	68	68	68	68	68	85	85
Dimension B3	Customer-specific								
Dimension B4	M10x1.5 15 deep	M10x1.5 15 deep	M10x1.5 15 deep	M12x1.75 16 deep	M12x1.75 16 deep	M12x1.75 16 deep	M12x1.75 16 deep	M14x2 19 deep	M14x2 19 deep

1) Minimum necessary screw insertion depth 1xØ

2) Including intermediate plate

Port Types

	NG20							NG25	
Ordering code	16	17		27		28		38	
Service line port A and B	3/4 in			1 in				1 1/4 in	
Boost port S (plugged)	M22x1.5; 14 deep							M27x2; 16 deep	
Spacing between service line ports (A'-B')	66	75				84		84	
For mounting on axial piston motor	A2FM/E	A2FM/E	A6VM	A2FM/E	A6VM	A2FE	A6VM	A2FM/E	A6VM
Size	28, 32, 45	56,63	55	80, 90	80	107, 125	107	107, 125, 160, 180	107, 140, 160
Motor port plate required (with secondary pressure-relief valves, mutual bleed-off)	181	181	380	181	380	171	370	181	380

Cross-References

Mineral oil _____ RE 90220

Environmentally acceptable hydraulic fluids _____ RE 90221

HF hydraulic fluids _____ RE 90223

A2FM _____ RE 91001

A2FE _____ RE 91008

A6VM _____ RE 91604

Hydrotrac GFT _____ RE 77110

Mobilex GFT-W _____ RE 77502

General Instructions

– The BVD counterbalance valve is designed to be used in open circuits.

– Project planning, assembly and commissioning of the axial piston unit with counterbalance valve require the involvement of qualified personnel.

– The service line ports and function ports are only designed to mounting hydraulic lines.

– During and shortly after operation, there is a risk of burns on the axial piston unit. Take suitable safety measures (e.g. wear protective clothing).

– There may be shifts in the characteristic depending on the operating state of the axial piston unit (operating pressure, fluid temperature).

– The data and note contained herein must be adhered to.

– The following tightening torques apply:

- Threaded hole in axial piston unit:
  The maximum permissible tightening torques M_{Gmax} are the maximum values for the threaded holes that must not be exceeded. For values, refer to the following table.

- Armatures:
  Observe the manufacturer's instruction regarding tightening torques for the used armatures.

- Fixing screws:
  For fixing screws according to DIN 13, we recommend checking the tightening torque in individual cases as per VDI 2230.

- Locking screws:
  For the metallic locking screws supplied with the axial piston unit, the required tightening torques of locking screws M_V apply. For values, refer to the following table.

Thread size at ports		Max. permissible tightening torque of the threaded holes M_{Gmax}	Required tightening torque of the locking screws M_V	WAF hexagon socket
M12x1.5	DIN 3852	50 Nm	25 Nm	6 mm
M22x1.5	DIN 3852	210 Nm	80 Nm	10 mm
M27x2	DIN 3852	330 Nm	135 Nm	12 mm

Rexroth
Bosch Group

Counterbalance Valve BVE

Data sheet

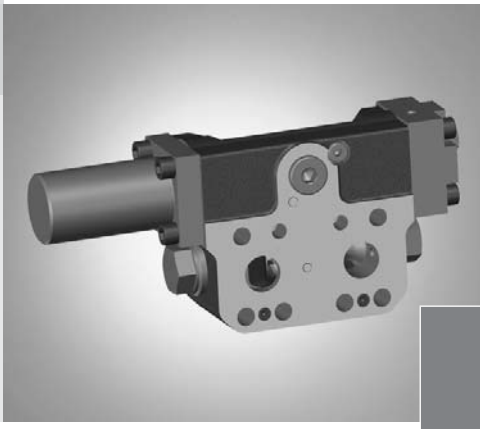

Series 51
Size 25
Nominal pressure 350 bar
Maximum pressure 420 bar
For winch drives, open circuit

Contents

Ordering code for standard program	2
Project planning and safety instructions	3
Technical data	4
Choosing the counterbalance spool version	5
Functional description	6
Application example of winch	7
Dimensions size 25	8
Installation versions	10
Mounting the counterbalance valve	11
General instructions	12

Features

- Single-action counterbalance valve especially for winch drives in open circuits
- Sensitive damping for stable lowering
- Simple adaptation to application
- Compact design and direct fitting to axial piston motors A2FM, A2FE and A6VM, A6VE
- Available in a set with axial piston motors A2FM, A2FE and A6VM, A6VE.
- Standard service line ports according to SAE J518
- Integrated brake release valve optional, with or without pressure reduction
- Good efficiency through reduced flow losses

Ordering code for standard program

BVE	25		38		/	51	N		–	V		0	K00		T30	S00	–	
01	02	03	04	05		06	07	08		09	10	11	12	13	14	15		16

Valve type

01	Counterbalance valve, single-side	**BVE**

Size (NG)

02	Flow, nominal $q_{v\,nom}$ 320 l/min, at $\Delta p = 20$ bar	**25**

Control range (pressure when counterbalance spool starts/stops opening)

03	Spring value (without return pressure)	18 to 38 bar	**W**
		9 to 39 bar	**V**

Ports

04	Size allocation: see page 11	**38**

Ports for brake release

05	With high pressure	**S**
	With reduced high pressure 21^{+4} bar (brake release valve)	**L**

Series

06	Series 5, index 1	**51**

Configuration of ports and fastening threads

07	Metric, port threads with profiled sealing ring according to DIN 3852	**N**

Long spring cover (design: see page 8)

08	On port side C, lift via port C	**C**
	On port side D, lift via port D	**D**

Seals

09	FKM (fluor-caoutchouc)	**V**

Counterbalance spool version (selection: see page 5)

10	10	**10**
	20	**20**

Opening characteristics of counterbalance spool

11	Standard	**0**

Residual opening in counterbalance spool

12	Without	**K00**

Damping D1 (channel to counterbalance spool)

13	Throttle pin, comparative diameter	Inlet	Outlet	
		0.4 mm	2.0 mm	**D4599**
		0.4 mm	0.4 mm	**D4545**
		0.4 mm	0.7 mm	**D4580**

Damping D2 (reservoir outlet)

14	With orifice ø0.3 mm	**T30**

Flushing cavity

15	Plugged	**S00**

Standard / special version

16	Standard version	**0**
	Standard version with installation variant, e.g. ports open or closed, contrary to standard	**Y**
	Special version	**S**

Note

Short designation X on a feature refers to a special version not covered by the ordering code.

Project planning and safety instructions

Order details

When placing the order, the following information is necessary to ensure correct acceptance at our test stands:

– Motor ordering code

– Counterbalance valve ordering code

– Flow

– Application (e.g winch)

– Pressure setting of the secondary pressure relief valves in the motor

– For the design of the brake release valve, we must know the following data for the mechanical park brake:

  - the cracking pressure

  - the volume of the counterbalance spool between minimum stroke (brake closed) and maximum stroke (brake released with 21 bar)

  - the required closing time for a warm device (oil viscosity approx. 15 mm^2/s)

Counterbalance valve and axial piston motor can be ordered as a ready-assembled and tested unit.

Type selection (ordering code)

Control range
The control range defines the pressure range at which the counterbalance spool starts to open.

The control range of the counterbalance spool is to be chosen so that the mechanical park brake is fully open before the counterbalance spool starts to open.

Brake release
The integrated pressure reduction valve is necessary when the mechanical brake on the gear unit cannot handle the full system pressure.

The maximum permissible brake release pressure must be agreed with the winch manufacturer. The brake release valve reduces the high pressure to the value stated.

Counterbalance spool version
The counterbalance spool version depends on the maximum flow required through the counterbalance valve.

Counterbalance spool selection for required flow as per diagram on page 5.

If the desired flow is not within the range of the counterbalance spool supplied, please contact us.

Residual opening in counterbalance spool
In winch applications, any residual opening is prohibited, since otherwise the load would not stay suspended. For that reason, version "K00" is prescribed.

Damping
The throttle pin from D1 (inlet) and the orifice D2, plus the return pressure to the reservoir, define the actual cracking pressure of the counterbalance spool in M_{P1}.

The damping D1 (outlet) and D2 define the closing speed of the counterbalance spool. The larger the comparative diameter D1 (outlet), the faster the counterbalance spool will close (see table on page 4).

For the initial equipment (prototype), we recommend damping D1 = D4599 and D2 = T30.

Safety instructions

Failure to observe any of the following points can lead to uncontrolled operating conditions with serious personal injury and material damage.

– The counterbalance valve does **not** replace the mechanical park brake. If necessary, provide mechanical brake systems.

– Counterbalance valves are usually only used in open circuits.

– System optimization (reduction) for the first prototype is recommended with regard to the valve block, axial piston motor, counterbalance valve and park brake.

– The opening and closing characteristics of the counterbalance valve and control piston in the directional valve must be mutually compatible.

– The mechanical park brake in winch drives must only be effective after the counterbalance valve spool has closed. Otherwise, the brake will be subject to wear.

– Note the maximum permissible cracking pressure of the park brake. If necessary, use the integrated pressure reduction valve as a brake release valve with reduced high pressure (version "L").

– The counterbalance valve converts the entire kinetic energy/potential energy into heat during the braking/lowering process. Consequently, ensure sufficient cooler and/or tank capacity.

– Counterbalance valves should only be operated in combination with close-by secondary pressure relief valves in order to protect the motor against pressure spikes. The table on page 11 lists the motor and port plate types for the counterbalance valve BVE25. The port plates already contain the secondary pressure-relief valves.

– Feeding at port S of the counterbalance valve reduces the risk of cavitation. Ensure sufficient pressure and flow for feeding.

– We recommend ordering an axial piston motor and counterbalance valve as a single unit. This ensures optimal matching and combined testing.

– If motor and counterbalance valve are ordered separately, we recommend that you consult our application engineers for the appropriate motor version.

Further safety-relevant measures for the application must be added as necessary by the customer.

Technical data

Hydraulic fluid

The axial piston motor used is decisive for the choice of hydraulic fluid.
Further information should be taken from our data sheets during project planning.

Operating pressure range

Pressure at service line port C or D

Nominal pressure p_{nom} _____ 350 bar absolute

Maximum pressure p_{max} _____ 420 bar absolute
Single operating period _____ 10 s
Total operating period _____ 300 h

Definition

Nominal pressure p_{nom}
The nominal pressure corresponds to the maximum design pressure.

Maximum pressure p_{max}
The maximum pressure corresponds to the maximum operating pressure within the single operating period. The sum of the single operating periods must not exceed the total operating period.

Identification of cracking pressure p_1

(value without return pressure)

The throttle chain from D_1 and D_2 is used to damp the opening and closing speeds of the counterbalance spool. The actual working pressure, measured at M_{P1}, is reduced by the throttle chain from D_1 and D_2 and actuates the counterbalance spool. The dependence of the actual pressure value at M_{P1} for the opening of the counterbalance spool on the cross-sectional area of the orifice at D_1 and D_2 is stated in the table below.

Schematic

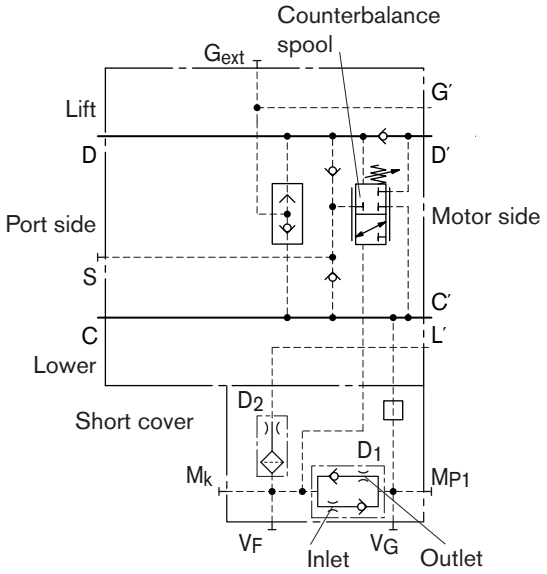

Table of values (theoretical values, without efficiency and tolerances; values rounded)

Size		NG			BVE.W	BVE.V
Operating pressure		p	bar	Nominal pressure	350	350
				Maximum pressure	420	420
Flow, nominal, at $\Delta p = 20$ bar		$q_{v\,max}$	L/min		320	320
Start of opening of counterbalance spool at port M_k		$\Delta p_{K\,B}$	bar		18	9
End of opening of counterbalance spool at port M_k		$\Delta p_{K\,E}$	bar		38	39
Pressure reduction valve for brake release (fixed values)	Maximum control pressure	p	bar	BVE...L/	21^{+4}	21^{+4}
	Start of control	p	bar	BVE...L/	10^{+4}	10^{+4}
Mass approx.		m	kg		18	18

Cracking pressure p_1

Pressure spring	Throttle pin in inlet channel D1	Orifice in reservoir outlet D2	Pressure value at counterbalance spool: Start of opening $\Delta p_{K\,B}$ [bar] (approx.)	Pressure value at counterbalance spool: End of opening $\Delta p_{K\,E}$ [bar] (approx.)	Pressure value at port M_{P1}: Start of opening Δp_1 [bar] (approx.)	Pressure value at port M_{P1}: End of opening Δp_1 [bar] (approx.)
W	0.45	0.3	18	38	24	51
V	0.45	0.3	9	39	12	52

Choosing the counterbalance spool version

Characteristic valid for BVE.../51.D). Schematic: see page 4

Pressure difference D → D′
(counterbalance spool at maximum opening)

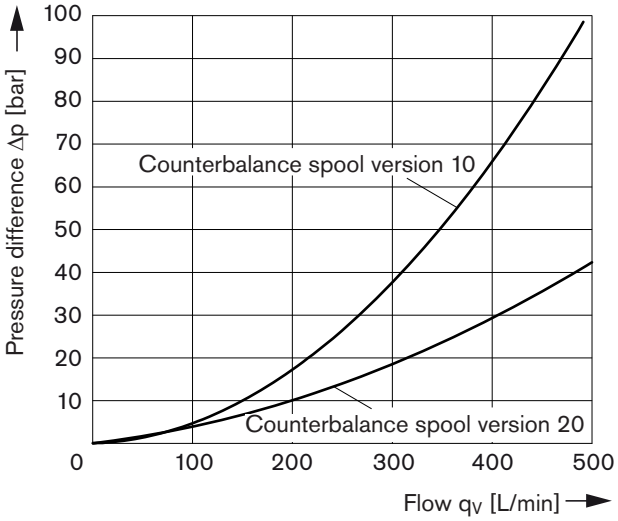

Counterbalance spool closing time
(for choosing D1 outlet damping)

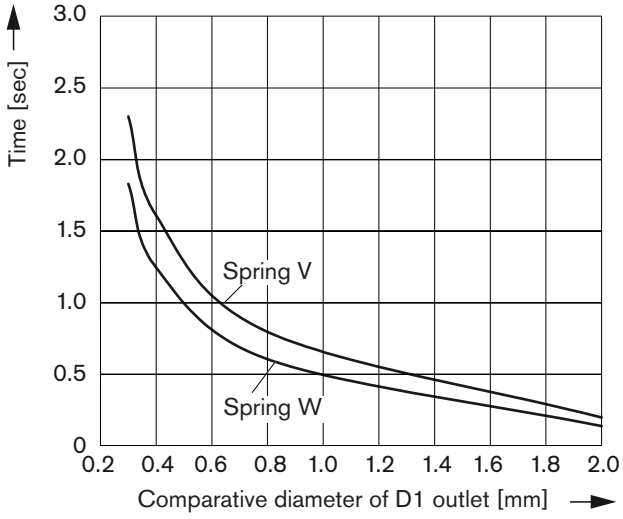

Pressure difference C′ → C

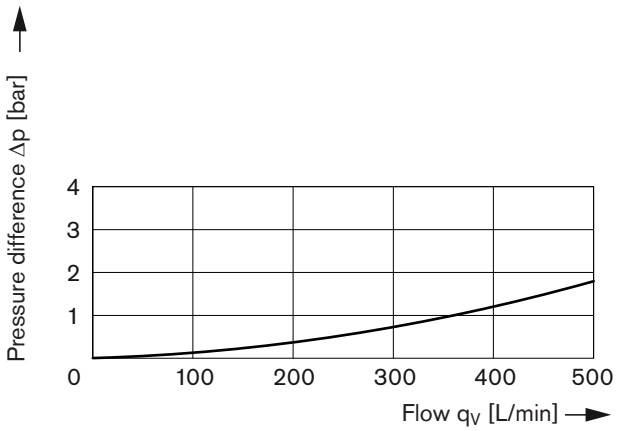

Feed pressure at port S

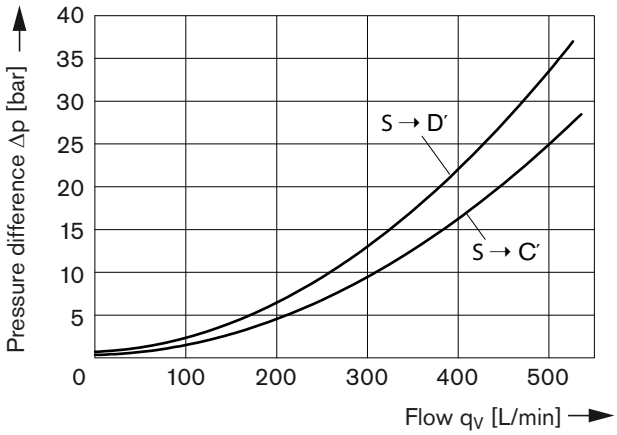

The above specifications are based on:

– Oil viscosity $\nu = 10$ mm²/s

– Oil temperature $\vartheta = 50$ °C

– Counterbalance spool fully open

Note
Pressure Δp of approx. 20 to 50 bar is normal for regulating the maximum flow in winch systems.
If the desired flow is not within the range of the two counterbalance spool supplied, please contact us.

Functional description

Winch counterbalance valves are designed to reduce the danger of overspeeding and cavitation of axial piston motors in open circuits. Cavitation occurs if during braking or the load-lowering process the motor speed is greater than it should be for the given inlet flow and therefore the inlet pressure collapses. If the inlet pressure drops below the given value $\Delta p_{K\,E}$ (see table on page 4), the counterbalance spool will move towards the close position. The cross-sectional area of the counterbalance valve return channel is then reduced, creating a bottleneck in the return flow of the hydraulic fluid. The pressure increases and brakes the motor until the rotational speed of the motor is again as it should be for the given inlet flow.

Brake release

Version S
Counterbalance valve with shuttle valve and port G_{ext} (plugged), without brake release valve (pressure reduction).

The respective high pressure is balanced via the shuttle valve and is available at port G_{ext} for release of the mechanical park brake. The brake release function without pressure reduction via the brake release valve is only employed if the mechanical park brake is approved for the maximum operating pressure.

Schematic

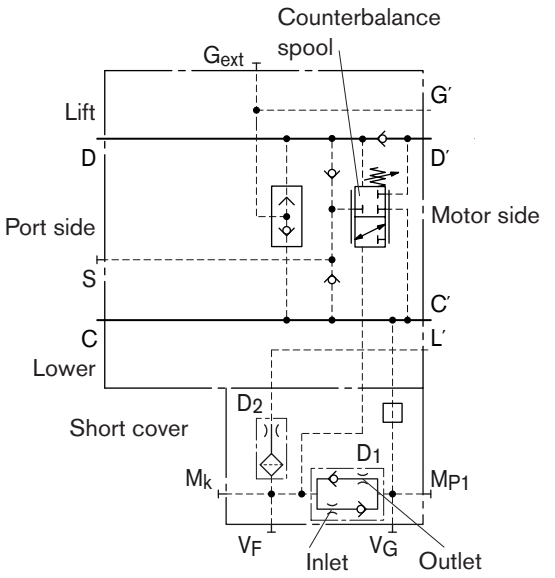

Version L
Counterbalance valve with shuttle valve, brake release valve for pressure reduction and port Br (plugged).

The respective high pressure is balanced and fed to the brake release valve (pressure reducing valve) via the shuttle valve. This opens from about 10 bar and reduces the respective operating pressure to approx. 21^{+4} bar. This brake release function is employed when the mechanical brake on the gear unit cannot handle the full system pressure.

The maximum permissible brake release pressure must be agreed with the winch manufacturer.

Schematic

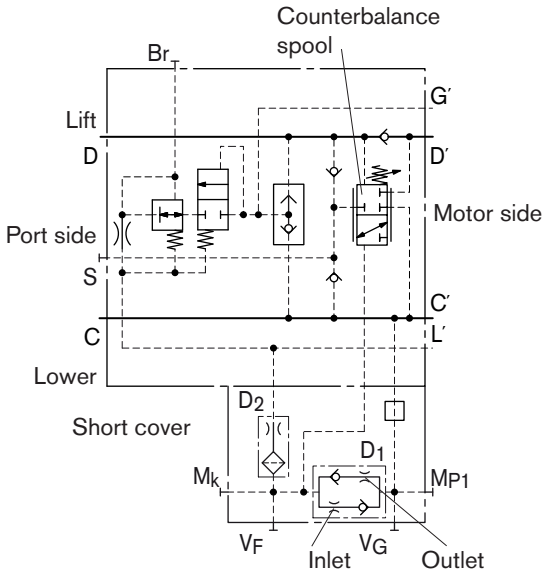

Damping D1

Installation position of throttle pin in short cover

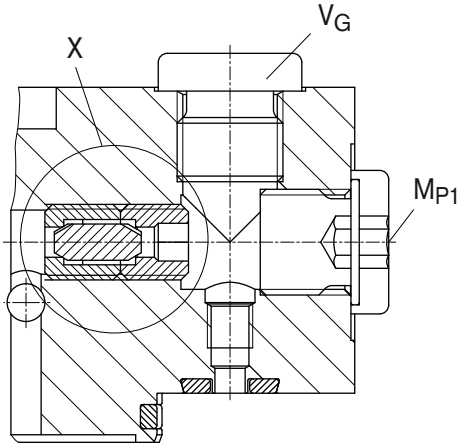

View X

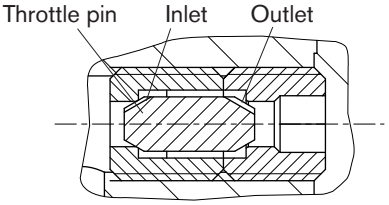

Application example of winch

Variable motor with integrated pressure-relief valves in the port plate and mounted counterbalance valve.

Winch counterbalance valve, size 25, without brake release valve (S), with counterbalance spool (10), without internal residual opening (K00, mandatory for winches), with weak damping (D4599).

e.g.: A6VM170HP5D10001F/71MWV0R4T28W0-0
+ BVE25W38S/51ND-V100K00D4599T30S00-0 fitted to a Rexroth winch drive

Schematic

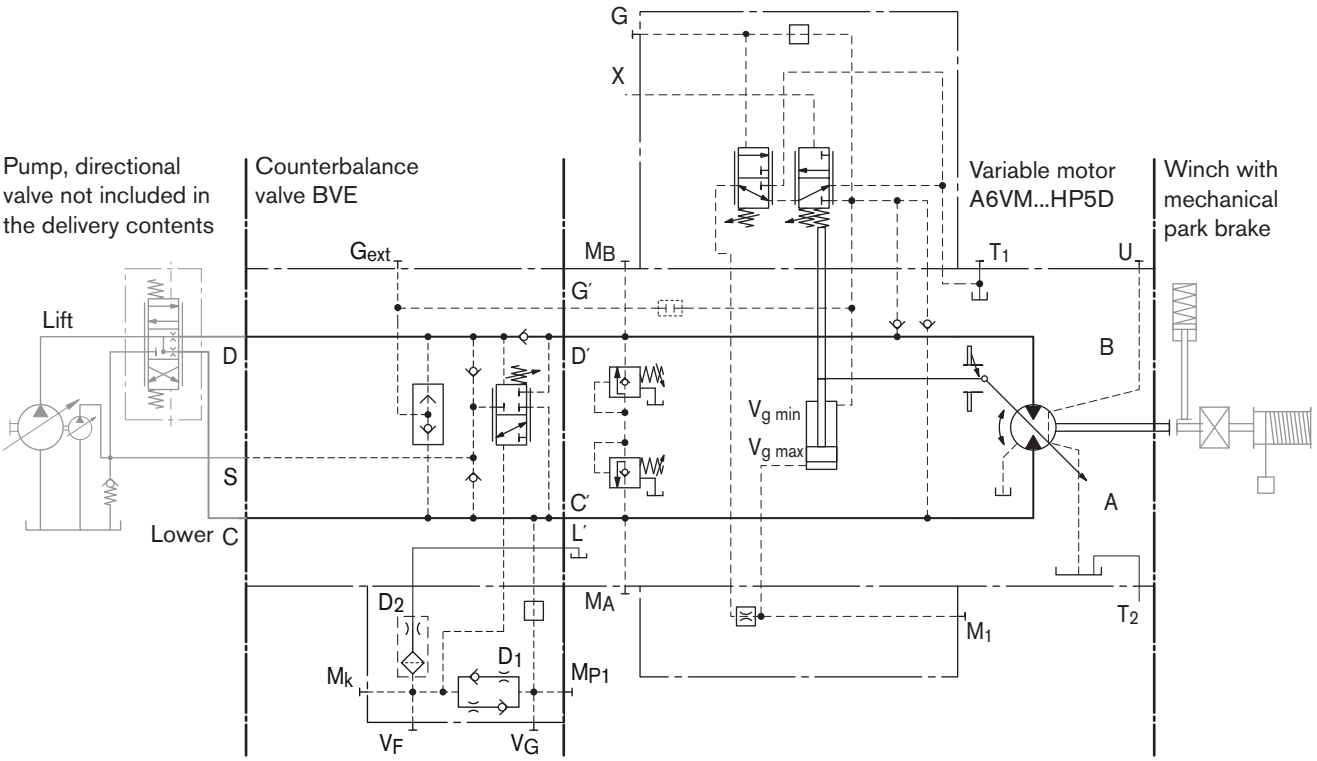

As an alternative to the above example, other axial piston motors from Bosch Rexroth (A2FM, A2FE and A6VM, A6VE) can also be used.

Dimensions size 25

Before finalizing your design, request a binding installation drawing. Dimensions in mm.

Long spring cover on port side C, lift via port C

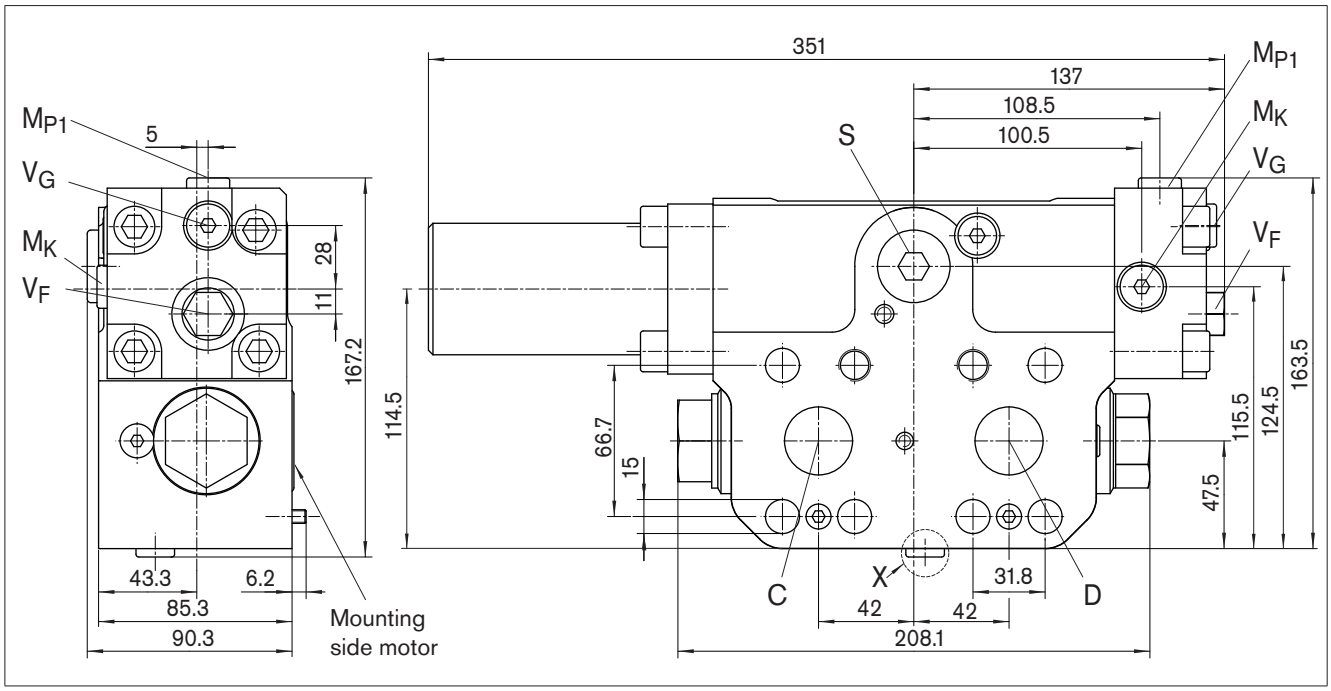

Long spring cover on port side D, lift via port D

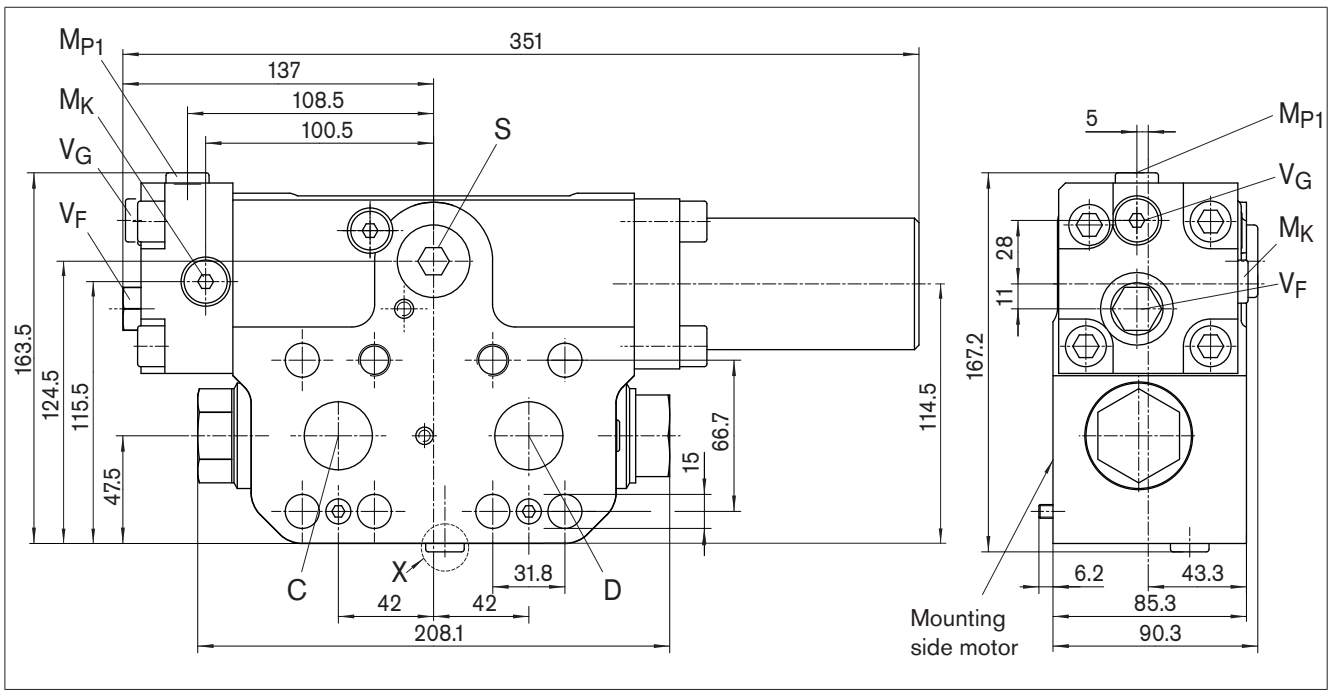

Detail X

With shuttle valve and port G_{ext} (version S)

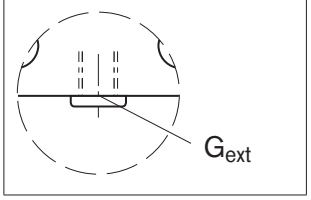

With shuttle valve, brake release valve and Br port (version L)

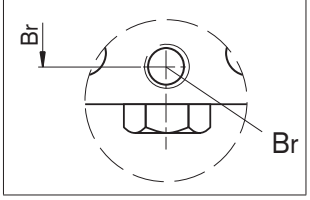

Dimensions size 25

Before finalizing your design, request a binding installation drawing. Dimensions in mm.

Ports with profiled sealing ring (ordering code designation N)

Designation	Port for	Standard	Size[1]	Maximum pressure [bar][2]	State
C, D	Service line	SAE J518[3]	1 1/4 in	420	O
	Fastening thread C/D	DIN 13	M14 x 2; 19 deep		
S	Infeed	DIN 3852	M27 x 2; 16 deep	[5]	X
Br	Brake release, reduced high pressure	DIN 3852	M12 x 1.5; 12.5 deep	8	X
G_{ext}	Brake release, high pressure	DIN 3852	M12 x 1.5; 12 deep	420	X
C′, D′	Service channel to motor[4]		ø30	420	O
G′	Selected high pressure, channel to motor[4]		ø4.2	420	O
L′	Leakage channel to motor[4]		ø4.2	10	O
M_{P1}	Measuring pressure A, before filter	DIN 3852	M14 x 1.5; 12 deep	420	X
V_G	Plug for threaded channel[4]	DIN 3852	M14 x 1.5; 12 deep	420	X
V_F	Threaded plug for filter channel[4]	DIN 6149	M16 x 1.5; 13 deep	420	X
M_K	Measuring pressure at counterbalance spool	DIN 3852	M14 x 1.5; 12 deep	420	X

O-ring for sealing to axial piston motor			
C′, D′	Service line port	AS 568 A	37.69 x 3.53 (-S-FKM90)
G′	Selected high-pressure channel for HA control of A6VM motor	DIN 3771	9 x 2 (-N-V80G1)
L′	Leakage channel	DIN 3771	9 x 2 (-N-V80G1)

1) Observe the general instructions on page 12 for the maximum tightening torques.
2) Momentary pressure spikes may occur depending on the application. Keep this in mind when selecting measuring devices and fittings.
3) Only dimensions according to SAE J518, metric fastening thread is a deviation from standard.
4) No customer ports. Subject to technical change
5) Application-specific. Please contact us

O = Must be connected (plugged on delivery)
X = Plugged (in normal operation)

Installation versions

Before finalizing your design, request a binding installation drawing. Dimensions in mm.

Design: A6VM

Direction of rotation: lift	Clockwise		Counter-clockwise	
Flow direction at motor	A to B		B to A	
Counterbalance valve effect at motor port	A		B	
Installation version of port plate	Start of control $V_{g\,max}$ Lifting winch	Start of control $V_{g\,min}$ Pulling winch – **not** permissible for lifting winch	Start of control $V_{g\,max}$ Lifting winch	Start of control $V_{g\,min}$ Pulling winch – **not** permissible for lifting winch
Long spring cover at BVE	On port side D	On port side C	On port side C	On port side D
Counterbalance valve ordering code	BVE25.../51.D	BVE25.../51.C	BVE25.../51.C	BVE25.../51.D
	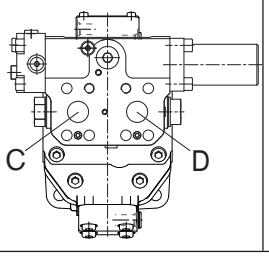	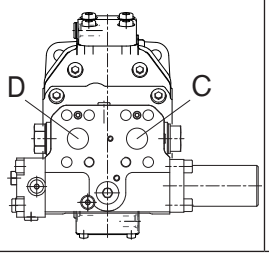	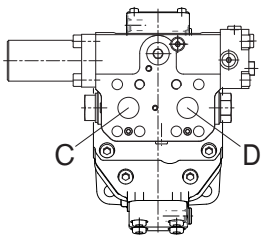	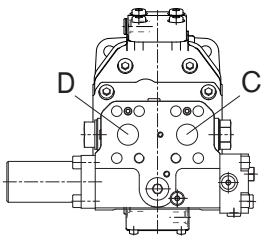

Start of control $V_{g\,max}$, negative control
HP5, HP6, EP5, EP6, HZ5, HZ7, EZ5, EZ6, EZ7, EZ8, DA0, DA1, DA2

Start of control $V_{g\,min}$, positive control – **not** permissible for lifting winch
HP1, HP2, EP1, EP2, HA1, HA2

Design: A2F

Direction of rotation: lift	Clockwise	Counter-clockwise
Flow direction at motor	A to B	B to A
Counterbalance valve effect at motor port	A	B
Long spring cover at BVE	On port side C	On port side D
Counterbalance valve ordering code	BVE25.../51.C	BVE25.../51.D
	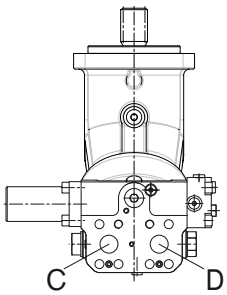	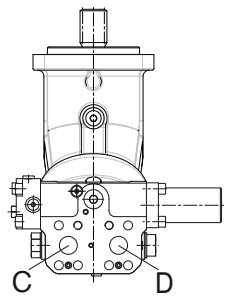

Mounting the counterbalance valve

Before finalizing your design, request a binding installation drawing. Dimensions in mm.

When delivered, the counterbalance valve is mounted to the motor with two tacking screws (transport protection). The tacking screws may not be removed while mounting the service lines! If the counterbalance valve and motor are delivered separately, the counterbalance valve must first be mounted to the motor port plate using the provided tacking screws. The counterbalance valve is finally mounted to the motor by screwing on the SAE flange with the following screws:

6 screws (**1, 2, 3, 4, 5, 8**) _____ length B1+B2+B3
2 screws (**6, 7**) _____ length B3+B4

Tighten the screws in two steps in the specified sequence from 1 to 8 (see following scheme).

In the first step, the screws must be tightened with half the tightening torque, and in the second step with the maximum tightening torque (see following table).

Thread	Strength class	Tightening torque [Nm]
M10	10.9	75
M12	10.9	130
M14	10.9	205

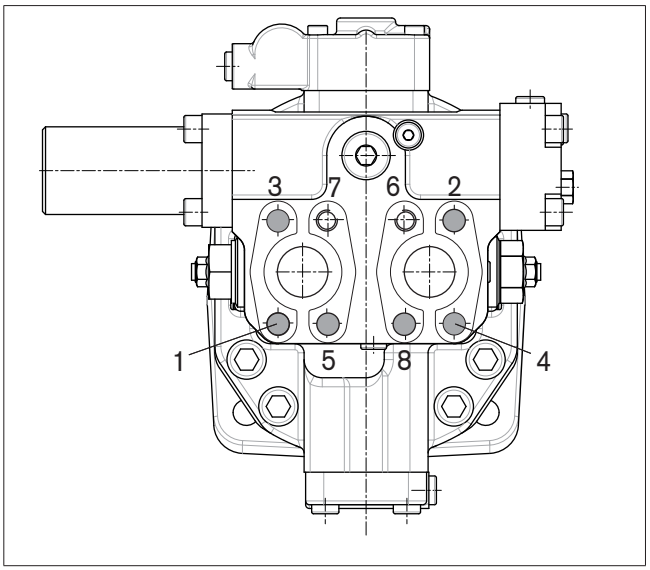

A6VM

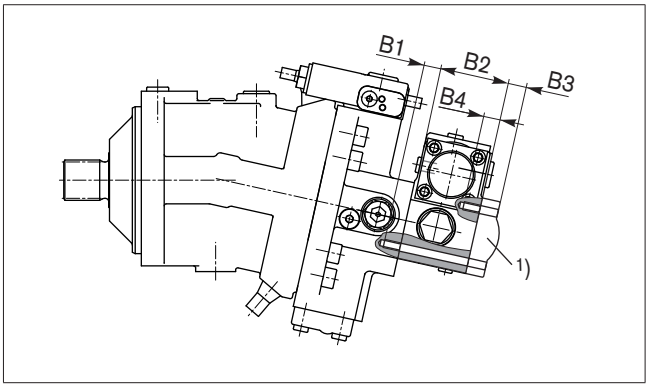

A2FM

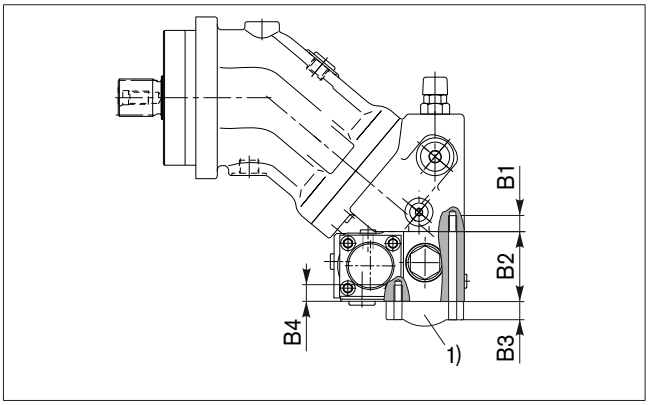

A2FE

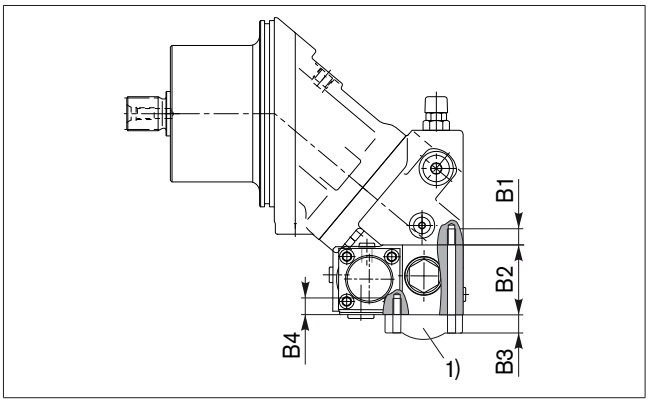

Axial piston motor	A2FM, A2FE	A6VM/63,	A6VE/63	A6VM/71	A6VE/71
Size	107, 125, 160, 180	107, 140, 160	107, 160	115, 150, 170	115, 170
Motor port plate required (with secondary pressure-relief valves, mutual bleed-off)	181	380	380	8	8
Dimension B1[1)]	M14 x 2; 19 deep				
Dimension B2	85				
Dimension B3	Customer-specific				
Dimension B4	M14 x 2; 19 deep				

1) Minimum necessary thread length 1 x ø

General instructions

– The BVE counterbalance valve is designed to be used in an open circuit.

– The project planning, installation and commissioning of the axial piston unit requires the involvement of qualified personnel.

– Before using the counterbalance valve, please read the corresponding instruction manual completely and thoroughly. If necessary, these can be requested from Bosch Rexroth.

– During and shortly after operation, there is a risk of burns on the counterbalance valve and the axial piston unit. Take appropriate safety measures (e.g. by wearing protective clothing).

– Depending on the operating conditions of the counterbalance valve (operating pressure, fluid temperature), the characteristic may shift.

– Service line ports:

  - The ports and fastening threads are designed for the specified maximum pressure of the counterbalance valve. The machine or system manufacturer must ensure that the connecting elements and lines correspond to the specified operating conditions (pressure, flow, hydraulic fluid, temperature) with the necessary safety factors.

  - The service line ports and function ports can only be used to accommodate hydraulic lines.

– The data and notes contained herein must be adhered to.

– The product is not approved as a component for the safety concept of a general machine according to ISO 13849.

– The following tightening torques apply:

  - Fittings:
    Observe the manufacturer's instructions regarding the tightening torques of the fittings used.

  - Mounting bolts:
    For mounting bolts with metric ISO thread according to DIN 13, we recommend checking the tightening torque in individual cases in accordance with VDI 2230.

  - Female threads of the counterbalance valve or axial piston unit:
    The maximum permissible tightening torques $M_{G\,max}$ are maximum values of the female threads and must not be exceeded. For values, see the following table.

  - Threaded plugs:
    For the metallic threaded plugs supplied with the counterbalance valve or axial piston unit, the required tightening torques of threaded plugs M_V apply. For values, see the following table.

Ports		**Maximum permissible tightening torque of the female threads $M_{G\,max}$**	**Required tightening torque of the threaded plugs M_V**[1]	**WAF hexagon socket of the threaded plugs**
Standard	**Size of thread**			
ISO 3852	M12 x 1.5	50 Nm	25 Nm[2]	6 mm
	M14 x 1.5	80 Nm	35 Nm	6 mm
	M27 x 2	330 Nm	135 Nm	12 mm

1) The tightening torques apply for screws in the “dry” state as received on delivery and in the “lightly oiled” state for installation.
2) In the “lightly oiled” state, the M_V is reduced to 17 Nm for M12 x 1.5.

Counterbalance valve
BVD/BVE Series 52

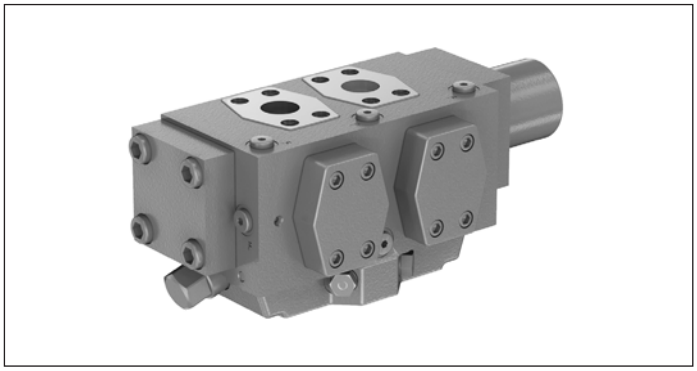

- Size 32
- Nominal pressure Motor side 450 bar
  Pump side 350 bar
- For winches and track drives in open circuit

Features

- Damping for stable lowering and safe downhill movement
- Simple adaptation to application
- Compact design and direct mounting to axial piston motors A6VM and A6VE
- Available in a set with axial piston motors A6VM and A6VE
- Standard working ports according to SAE J518
- Integrated brake release port, with or without pressure reduction
- Good efficiency through reduced flow losses
- Four working ports (see type code, pos. 04)
- Rotationally symmetric
- Suitable for high flow rates

Contents

Type code	2
Technical data	4
Characteristic curves for counterbalance spool 33	5
Functional description	6
Example applications	7
Dimensions	8
BVE installation variants for winch drives	11
Mounting of the counterbalance valve	12
Project planning notes	13
Safety instructions	15

4

Type code

01	02	03	04	05		06	07	08		09	10	11	12	13	14		15
					/	52			–	V	0	1	K00		T03	–	

Valve type

01	Counterbalance valve, double-acting	**BVD**
	Counterbalance valve, one-sided	**BVE**

Size

02	Flow, nominal	$q_{v\,nom}$ 650 l/min	**32**

			BVD	BVE	
Control range					
03	Start/end of opening of counterbalance spool (spring value without return flow pressure)	20 to 38 bar	●	●	**W**
		10 to 30 bar	●	–	**V**

Working port		SAE J518	Hole distance	
04		1 1/4 in	84 mm	**38**
		1 1/4 in	104 mm (bearing 90° offset)[1]	**31**

Ports for brake release

05	With high pressure	**S**
	With reduced high pressure 21^{+4} bar (brake release valve)	**L**[2]

Series

06	Series 5, index 2	**52**

Version of port and fastening threads

07	Metric, port threads with profiled sealing ring according to DIN 3852	**N**

Long spring cover (see page 11)

08	On port side **C**, lift via port **C**	**C**
	On port side **D**, lift via port **D**	**D**

Seal

09	FKM (fluoroelastomer)	**V**

Counterbalance spool

10	Version 33	**33**

Opening characteristics of counterbalance spool

11	Standard	**0**

Residual opening in counterbalance spool

12	Without	**K00**

Damping D1 (channel to counterbalance spool)

13	**BVE**	Throttle pin installed on port side **C**			**C4599**
		Throttle pin installed on port side **D**			**D4599**
	BVD	Throttle pin, comparative diameter	**Inlet**	**Outlet**	
			0.4 mm	2.0 mm	**D4599**
			0.4 mm	0.7 mm	**D4580**

● = Available – = Not available

1) The screws are not included in the scope of delivery. These can be supplied by Bosch Rexroth on request.
2) On request

01	02	03	04	05		06	07	08		09	10	11	12	13	14		15
					/	52			–	V	0	1	K00		T03	–	

Damping D2 (reservoir outlet)

14	Without	**T00**
	With orifices on port side **C** and **D** ø0.3 mm (D1 max. D45XX)	**T03**
	With orifice installed on port side **C**	**C03**
	With orifice installed on port side **D**	**D03**

Standard / special version

15	Standard version	**0**
	Standard version with installation variant, e.g. ports open or closed, contrary to standard	**Y**
	Special version	**S**

● = Available – = Not available

Notice

- ▶ Note the project planning notes on page 13.
- ▶ In addition to the type code, please specify the relevant technical data when placing your order.

Technical data

Hydraulic fluid

The axial piston motor used is decisive for the selection of hydraulic fluid. For further information, please refer to our data sheets during project planning.

Note: At no point of the component may the temperature be higher than 115 °C.

Working pressure range

Pressure at working port C/D (on the pump side) or C´/D´ (on the motor side)		Definition
Nominal pressure p_{nom}	On the pump side: 350 bar On the motor side: 450 bar	The nominal pressure corresponds to the maximum design pressure.
Maximum pressure p_{max}	On the pump side: 400 bar[1)] On the motor side: 500 bar	Restrictions: ▶ maximum acceleration 7g ▶ maximum 1 million load changes

Determination of cracking pressure p_1 (values without return flow)

The throttle chain from **D_1** and **D_2** is used to damp the opening and closing speeds of the counterbalance spool. The actual pump pressure is reduced by the throttle chain from **D_1** and **D_2** and controls the counterbalance spool.

▼ **Circuit diagram BVD**

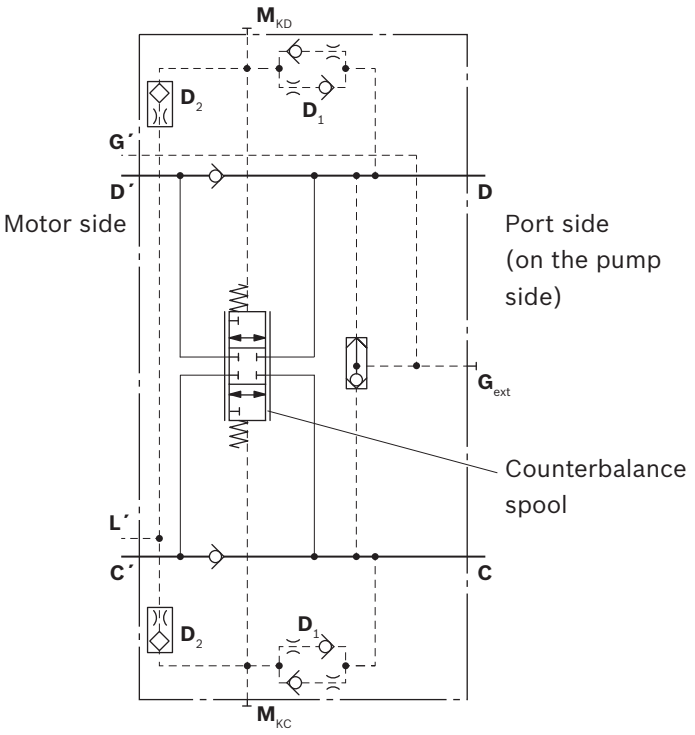

Table of values

Valve type					BVD...W	BVD...V	BVE...W
Nominal pressure		p	bar	On the pump side	350	350	350
				motor side	450	450	450
Flow, nominal		$q_{v\,max}$	l/min		650	650	650
Start of opening of counterbalance spool at port M_K		$\Delta p_{K\,B}$	bar		20	10	20
End of opening of counterbalance spool at port M_K		$\Delta p_{K\,E}$	bar		38	30	38
Pressure reducing valve for brake release (fixed setting)	Maximum control pressure	p	bar	BVE...L/	21^{+4}	21^{+4}	21^{+4}
	Beginning of control	p	bar	BVE...L/	10^{+4}	10^{+4}	10^{+4}
Weight approx.		m	kg		37	37	42

Notice

- Theoretical values, without efficiency and tolerances; values rounded
- Exceeding the maximum or falling below the minimum permissible values can lead to a loss of function, a reduction in operational service life or total destruction of the valve.

1) With versions “T03”, “C03” and “D03” (concerns damping “D2”, for reservoir outlet), pressures that are higher than the nominal pressure are **not** permitted

Characteristic curves for counterbalance spool 33

▼ **Pressure differential at the outlet (via valve spool) D´ → D or C´ → C working port at rear (38)**

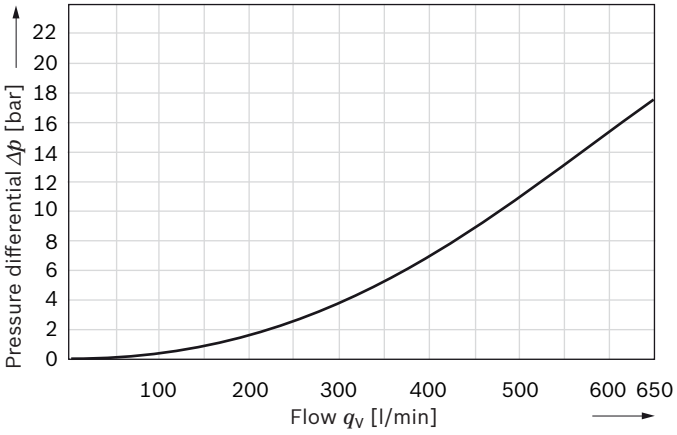

▼ **Pressure differential D´ → D or C´ → C (via valve spool) with working port offset by 90° (31)**

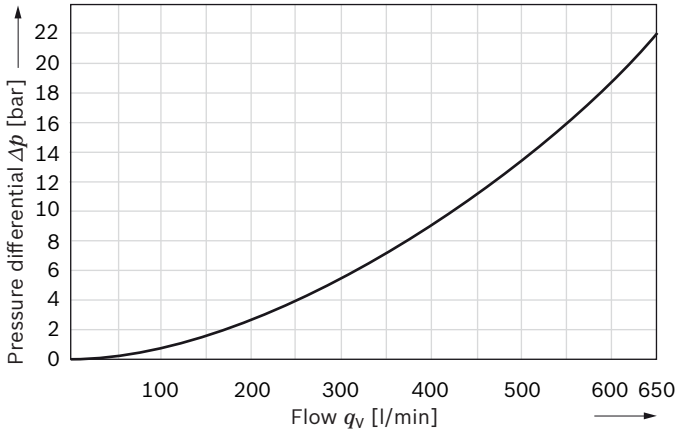

▼ **Pressure differential at the inlet (via check valve) C → C´ or D → D´ working port at rear (38)**

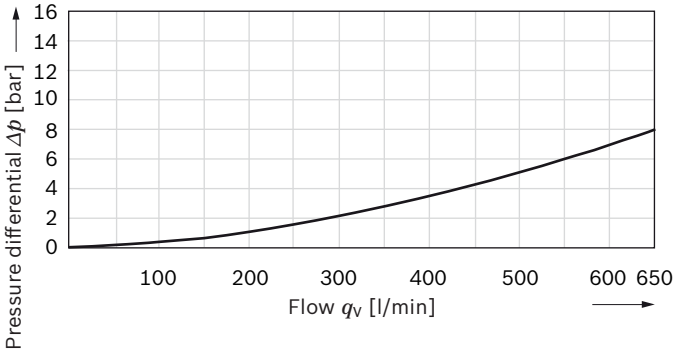

▼ **Pressure differential C → C´ or D → D´ (via check valve), with working port offset by 90° (31)**

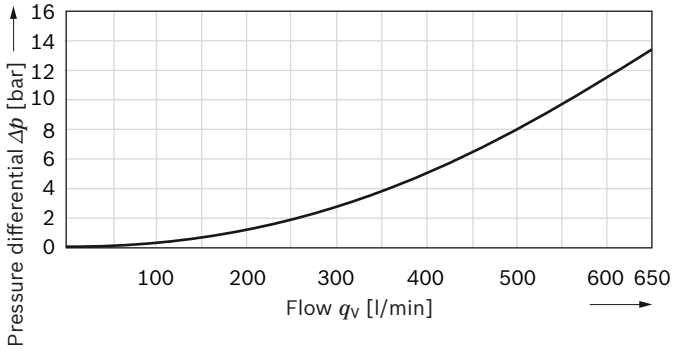

The above parameters are based on:

- Oil viscosity ν = approx. 21 mm²/s
- Oil temperature ϑ = 50 °C
- Counterbalance spool fully open

Notice

- Pressure Δp of approx. 20 to 50 bar is normal for determining the maximum flow in winch drives.
- If the desired flow (pressure difference) does not match the counterbalance spool described here, please contact us.

Functional description

Counterbalance valves are designed to reduce the danger of overspeed and cavitation of axial piston motors in open circuits. Cavitation occurs if, during braking or load-lowering, the rotational speed of the motor is greater than it should be for the given inlet flow, causing the supply pressure to fall sharply. If the supply pressure drops below the given value $\Delta p_{K\,E}$, the counterbalance spool will move towards the close position. The cross-sectional area in the counterbalance valve return channel is then reduced, creating a bottleneck in the return flow of the hydraulic fluid. The pressure increases and brakes the motor until the rotational speed of the motor reaches the specified value for the given inlet flow.

The counterbalance valve is available in two versions.
BVD: Throttling effect in both flow directions, e.g. for moving forward and backward
BVE: Throttling effect in one flow direction, e.g. for lowering with pulling loads
See BVE circuit diagram on page 7

Brake release

Version S
Counterbalance valve with shuttle valve and port **G**$_{ext}$ (plugged), without brake release valve (pressure reduction). The respective high pressure is balanced via the shuttle valve and is available at port **G**$_{ext}$ for venting the mechanical holding brake. The brake vent function without pressure reduction via the brake release valve is only employed if the mechanical holding brake is approved for the maximum working pressure.

▼ **Circuit diagram BVD...S**

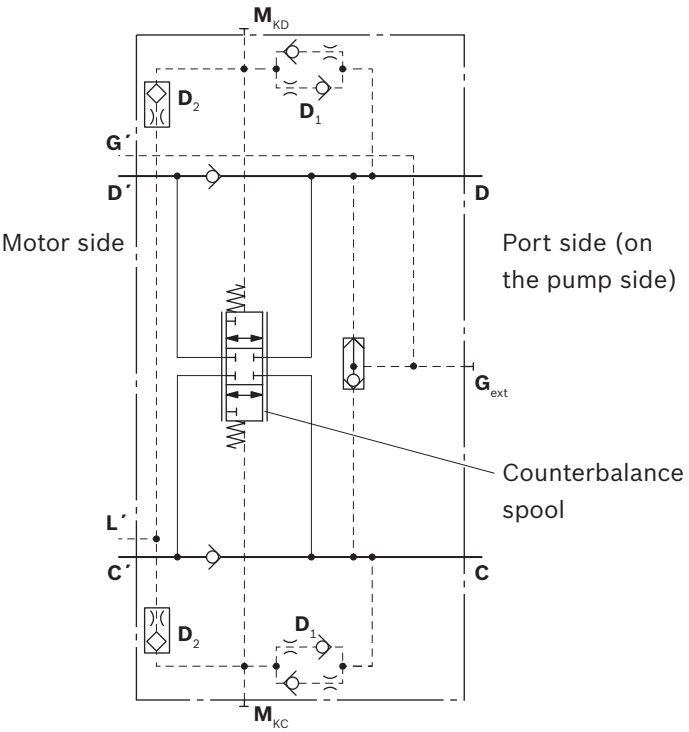

Version L
Counterbalance valve with shuttle valve, brake release valve for pressure reduction and port **Br** (plugged).
The respective high pressure is balanced and fed to the brake release valve (pressure reducing valve) via the shuttle valve. This opens from approx. 10 bar and reduces the respective working pressure to approx. 21^{+4} bar. This brake vent function is employed when the mechanical brake on the gear unit cannot handle the full system pressure.
The maximum permissible brake release pressure must be agreed with the winch or track drive manufacturer.

Example applications

Variable motor with integrated pressure relief valve in the port plate and mounted counterbalance valve.
Counterbalance valve for size 32 winches, without brake release valve (S), with counterbalance spool (pos. 10), without internal residual opening (K00, mandatory for winches), with weak damping (D4599). E.g.: A6VM215HP5D1P001B/71MWV0S4A29W0-0 + BVE32W38S/52ND-V330K00C4599D03S00 mounted to a Rexroth winch gearbox

Winch drive application

▶ Circuit diagram example for winch drive in cranes (BVE)

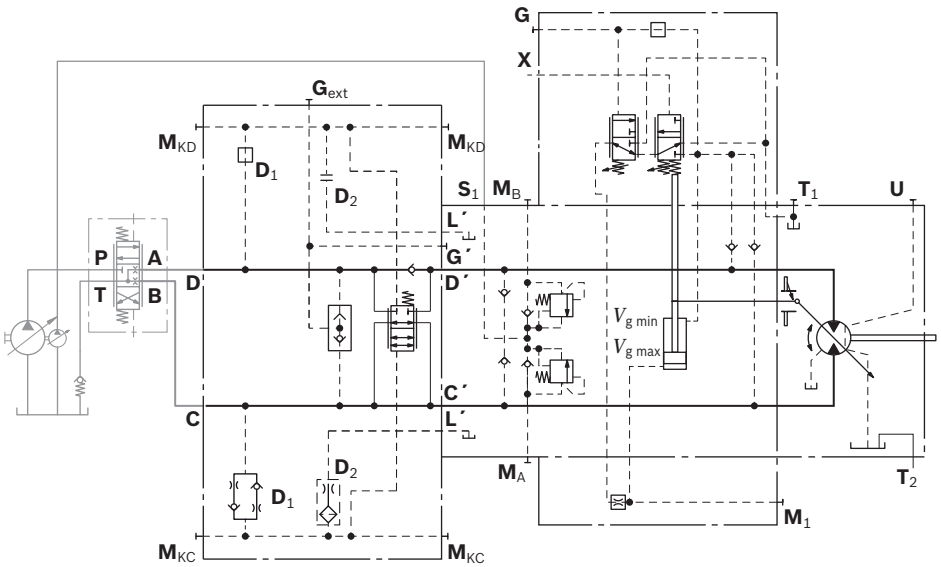

As an alternative to the above example, other Bosch Rexroth axial piston motors (A6VM and A6VE) can also be used.

Track drive application

▶ Circuit diagram example for track drive in excavator crawlers (BVD)

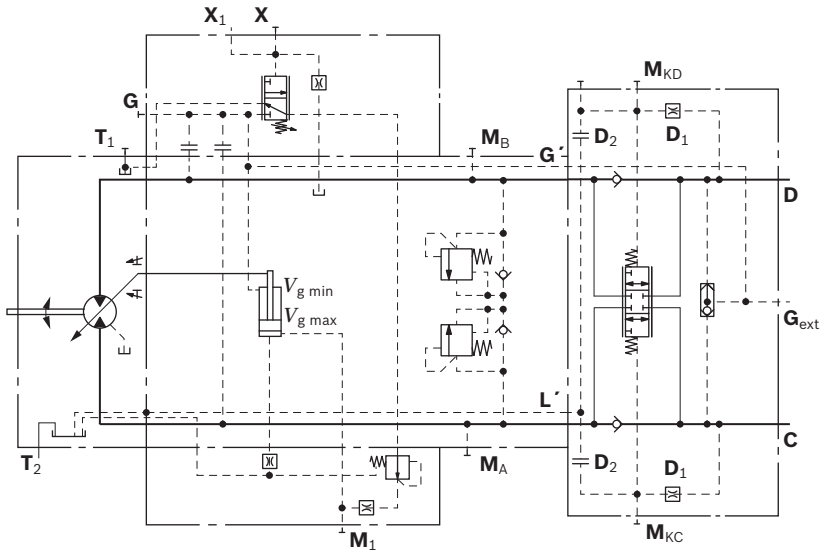

RE 95128/05.2015, Bosch Rexroth AG

Dimensions

Long spring cover on port side C, lift via port C

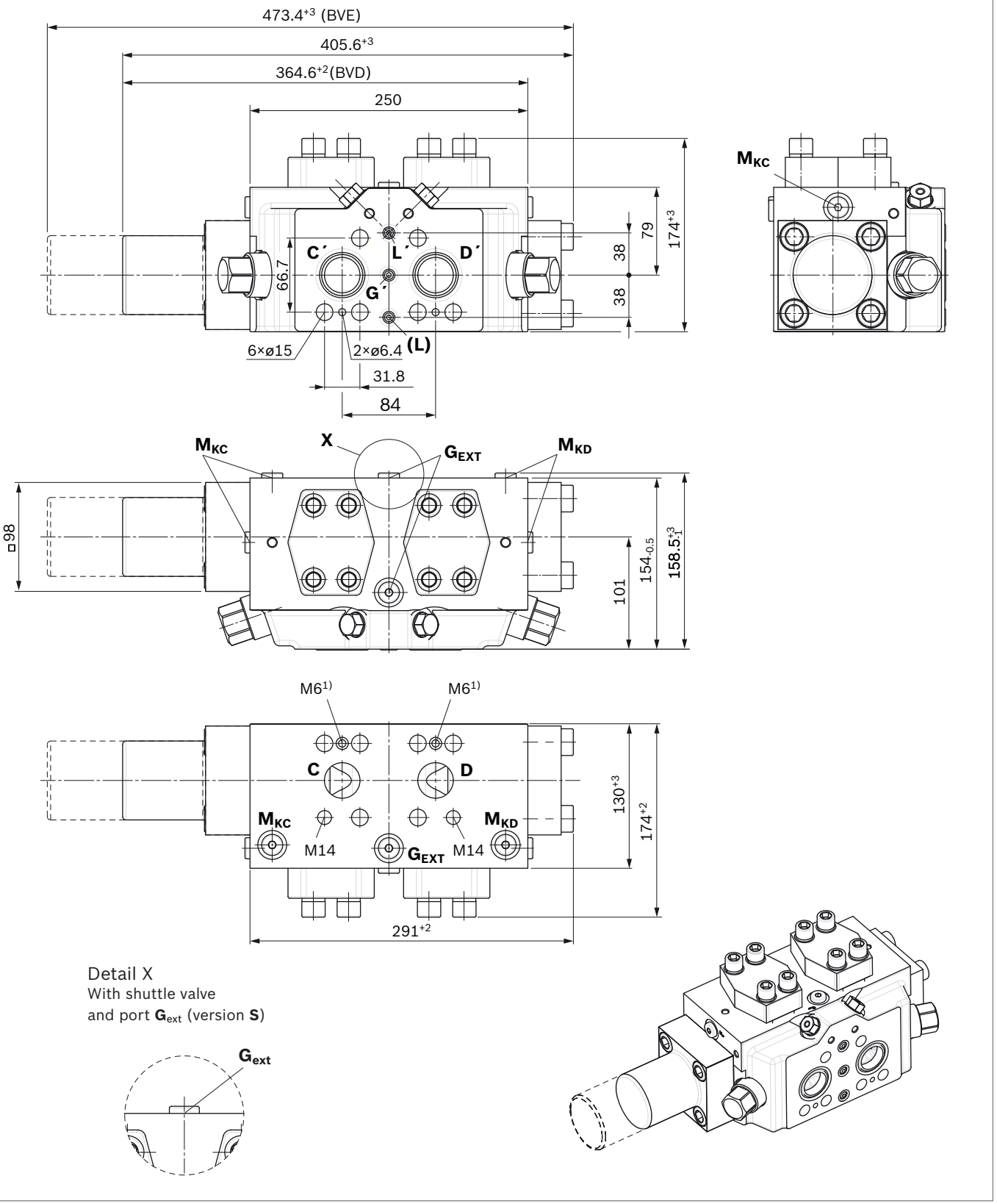

1) DIN912

Long spring cover on port side D, lift via port D

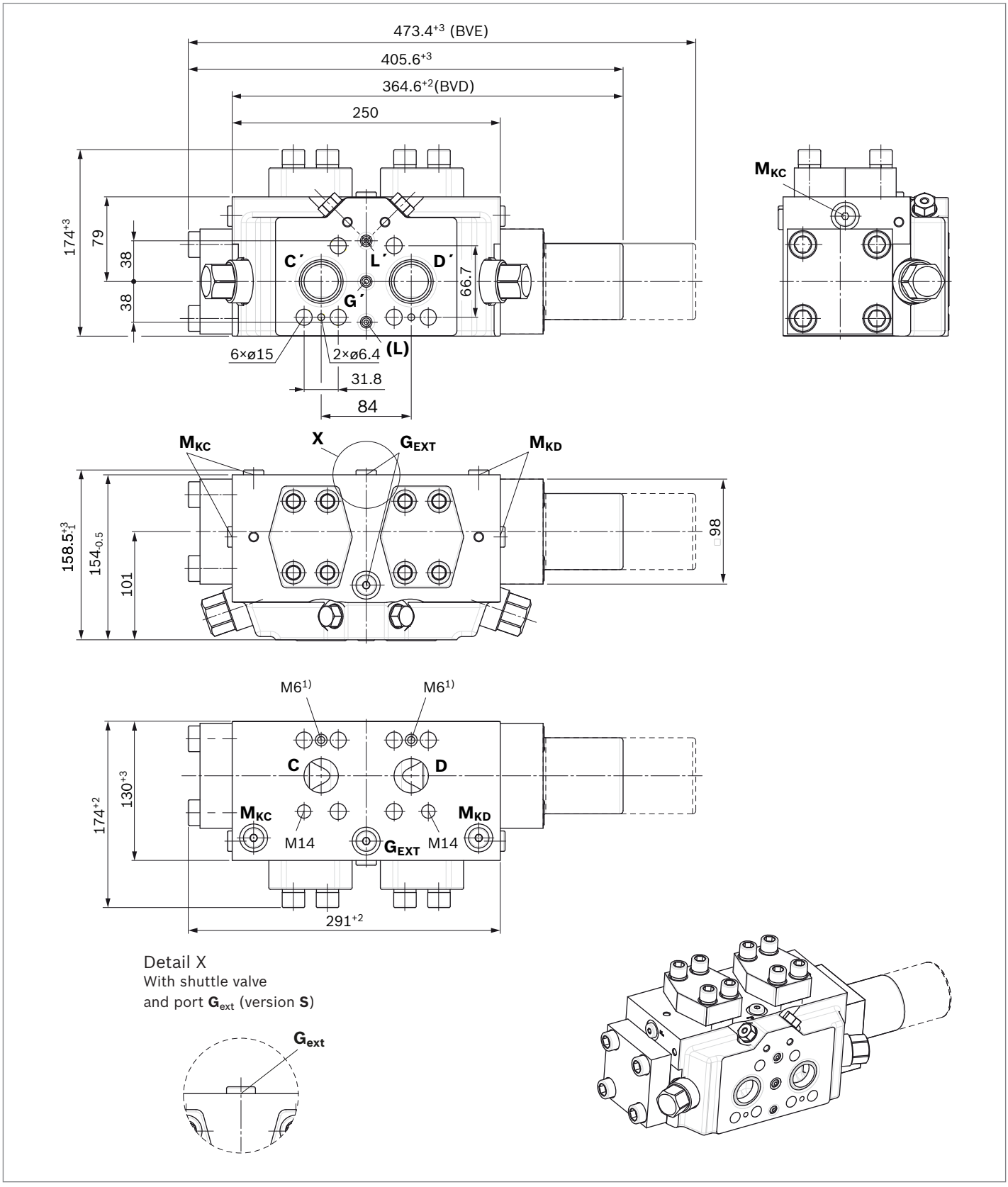

1) DIN912

Ports		Standard	Size	p_{max} [bar][1]	State[5]
C, D	Working port Fastening thread	SAE J518[2] DIN 13	1 1/4 in M14 × 2; 19 deep	400	O
G_{ext}	Brake release, high pressure	DIN 3852[3]	M14 × 1.5; 12 deep	400	X
C´, D´	Working channel to motor[4]		ø32	500	O
G´	Balanced high pressure, channel to motor[4]		ø4.2	400	O
L´	Drain channel to motor[4]		ø4.2	10	O
V_F	Threaded plug for filter channel[4]	DIN 6149	M16 × 1.5; 13 deep	400	X
M_K	Measuring pressure in counterbalance spool	DIN 3852[3]	M14 × 1.5; 12 deep	400	X

1) Depending on the application, momentary pressure peaks can occur. Keep this in mind when selecting measuring devices and fittings.
2) Only dimensions according to SAE J518, metric fastening thread is a deviation from the standard.
3) The countersink can be deeper than as specified in the standard.
4) No customer ports. Subject to technical change
5) O = Must be connected (plugged when delivered)
X = Plugged (in normal operation)

BVE installation variants for winch drives

Motor direction of rotation (lift)	Clockwise	Counter-clockwise
Flow direction at motor (lift)	**A** to **B**	**B** to **A**
Braking effect at the motor port plate	**A**	**B**
Beginning of control, motor	Beginning of control $V_{g\,max}$	Beginning of control $V_{g\,max}$
Counterbalance valve type with long spring cover on port side D [1)]	BVE32.../52.D	BVE32.../52.D
Installation variants	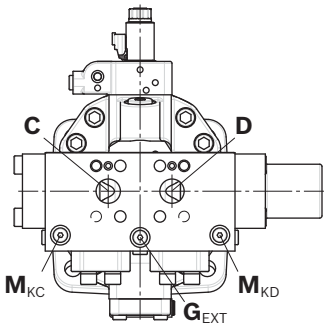	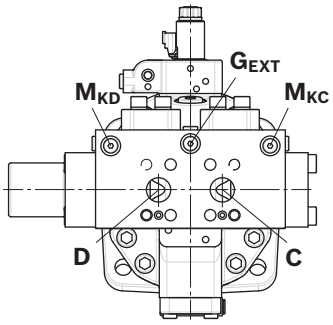
Counterbalance valve type with long spring cover on port side C [1)]	BVE32.../52.C	BVE32.../52.C
Installation variants	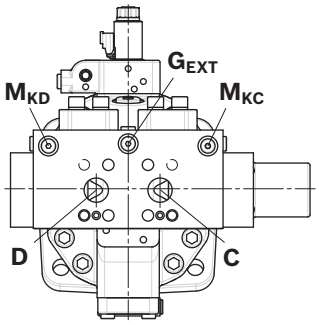	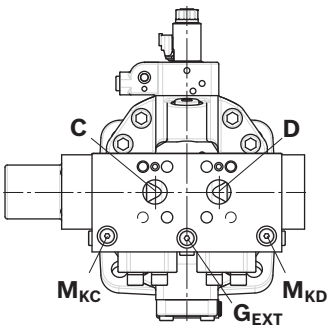

1) The throttling effect is always on the side with the long spring cover

Mounting of the counterbalance valve

When delivered, the counterbalance valve is fastened to the motor with two tacking screws (transport lock). The tacking screws may not be removed while mounting the working lines!
If the counterbalance valve and motor are delivered separately, the counterbalance valve must first be fastened to the motor port plate using the provided tacking screws.
The counterbalance valve is finally mounted to the motor by fitting the SAE flange with the following screws:

6 screws (1, 2, 3, 4, 5, 8)	Length B1+B2+B3
2 screws (6, 7)	Length B3+B4

Tighten the screws in two steps in the specified sequence from 1 to 8 (see figure below).
In the first step, the screws must be tightened with half the tightening torque, and in the second step with the maximum tightening torque (see table below).

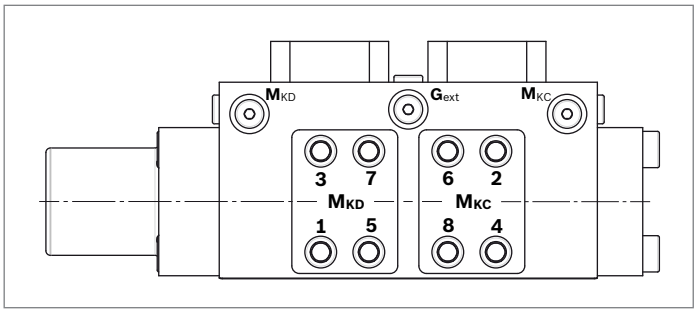

Thread	Property class	Tightening torque [Nm][1]
M14	10.9	172

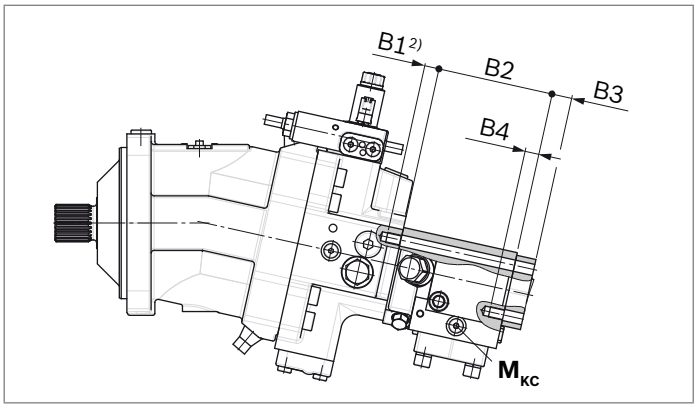

Axial piston motor	A6VM/65	A6VE/65	A6VM/71	A6VE/71
Size	200	200	215, 280	215
Dimension B1	M14 × 2; (19 deep[1])			
Dimension B2	154 -0.5			
Dimension B3	Customer-specific			
Dimension B4	M14 × 2; 19 deep			

Notes on the motor port plate

- All four threaded bores at the SAE port and additional bores for tacking screws must always be present
- Drain bores and port $\mathbf{G}_{ext}$ must be present
- Minimum thread reach according to VDI2230

1) The tightening torque applies to the thread friction rate of μ = 0.10 (corresponds to the “lightly oiled” state of the screws)
2) The depth depends on the motor

Project planning notes

- The BVD/BVE counterbalance valve is intended for use in an open circuit.
- The project planning, installation and commissioning of the counterbalance valve require the involvement of qualified skilled personnel.
- Before using the counterbalance valve, please read the corresponding motor instruction manual completely and thoroughly. If necessary, these can be requested from Bosch Rexroth.
- Before finalizing your design, please request a binding installation drawing.
- The specified data and notes contained herein must be observed.
- For safety reasons, controls with beginning of control at $V_{g\,min}$ (e.g., HA) are not permissible for winch drives, e.g. anchor winches.
- Depending on the operating conditions of the axial piston unit (working pressure, fluid temperature), the characteristic curve may shift.
- Preservation: Our axial piston units are supplied as standard with preservative protection for a maximum of 12 months. If longer preservative protection is required (maximum 24 months), please specify this in plain text when placing your order. The preservation periods apply under optimal storage conditions, details of which can be found in the data sheet 90312 or the motor instruction manual.
- Not all versions of the product are approved for use in a safety function according to ISO 13849. Please consult the responsible contact person at Bosch Rexroth if you require reliability parameters (e.g. $MTTF_d$) for functional safety.
- Please note the details regarding the tightening torques of port threads and other threaded joints in the motor instruction manual.
- Working ports:
  - The ports and fastening threads are designed for the specified maximum pressure of the counterbalance valve. The machine or system manufacturer must ensure that the connecting elements and lines correspond to the specified application conditions (pressure, flow, hydraulic fluid, temperature) with the necessary safety factors.
  - The working ports and function ports are only intended to accommodate hydraulic lines.
- System optimization (reduction) for the first prototype is recommended with regard to the valve block, axial piston motor, counterbalance valve and holding brake.
- The counterbalance valve converts the entire kinetic energy/potential energy into heat during the braking/lowering process. For this reason, sufficient cooling and/or reservoir capacity must be provided.
- We recommend ordering an axial piston motor and counterbalance valve as a single unit. This guarantees optimum configuration and joint examination.

To avoid cavitation in the axial piston motor, the following must be observed:

- The complete system must be designed in the customer vehicle so that the counterbalance valve closes more quickly than the control block in the customer vehicle. The recommendation is a proportional valve with programmable ramp.
- Control block: the control spool should be designed with a throttled A-B-T connection in the neutral position.
- An oil supply at port S of the motor reduces the risk of cavitation. Ensure sufficient supply pressure and quantity. An oil supply on the motor is recommended.
- During commissioning, it must be ensured that all boundary conditions, e.g. minimum pressure at the motor input, are observed.

Ordering details

When placing the order, the following parameters are necessary to ensure correct acceptance at our test benches:

- Motor type code
- Counterbalance valve type code
- Flow
- Application (e.g. winch, track drive)
- Pressure setting of the secondary pressure relief valves in the motor

For the design of the brake release valve, we require the minimum pressure for releasing the mechanical holding brake. Counterbalance valve and axial piston motor can be ordered as a ready-assembled and tested assembly group.

RE 95228/05.2019, Bosch Rexroth AG

Project planning notes

Type selection (type code)

Control range
The control range defines the pressure range at which the counterbalance spool starts to open. The control range of the counterbalance spool is to be chosen so that the mechanical holding brake is fully open before the counterbalance spool starts to open.

Brake release
The integrated pressure reducing valve is necessary when the mechanical brake on the gearbox cannot handle the full system pressure. The maximum permissible brake release pressure must be agreed with the gearbox manufacturer. The counterbalance valve reduces the high pressure to the value stated.

Counterbalance spool version
The counterbalance spool version depends on the maximum flow required through the counterbalance valve.
Selection of the counterbalance spool for the required flow in accordance with characteristic curves on page 5.
If the desired flow is not within the range of the counterbalance spool supplied, please contact us.

Residual opening in counterbalance spool
In winch drive and track drive applications, any residual opening is prohibited, since otherwise the load would not stay suspended. For that reason, version “K00” is prescribed.

Damping
The throttle pin from D1 (inlet) and the orifice D2 (reservoir outlet), plus the counter pressure at the counterbalance spool, determine the actual cracking pressure of the counterbalance spool at the working port.
The damping D1 (outlet) and D2 determine the closing speed of the counterbalance spool. The larger the comparative diameter D1 (outlet), the faster the counterbalance spool will close (see table on page 4).
For the initial equipment (prototype), we recommend damping D1 = D4599 and D2 = T03 for winch drives.
For the initial equipment (prototype), we recommend damping D1 = D4599 and D2 = T00 for track drives.

Safety instructions

Failure to observe any of the following points can lead to uncontrolled operating conditions with serious personal injury and material damage.

- The counterbalance valve does **not** replace the mechanical holding brake. If necessary, provide mechanical braking systems.
- The mechanical holding brake in the winch gearbox must only be effective after the counterbalance spool has closed. Otherwise, the brake will be subject to wear.
- Note the maximum permissible cracking pressure of the holding brake. If necessary, use the integrated pressure reducing valve as a brake release valve with reduced high pressure (version “L”).
- Counterbalance valves should only be operated in combination with close-by secondary pressure relief valves in order to protect the motor against pressure peaks.
  The motor port plate already contains the secondary pressure relief valves.
- Cavitation must be prevented for safety reasons – see project planning notes for remedial measures
- During and shortly after operation, there is a risk of getting burnt on the axial piston unit and especially on the solenoids. Take appropriate safety measures (e.g. by wearing protective clothing).
- Moving parts in control equipment (e.g. valve spools) can, under certain circumstances get stuck in position as a result of contamination (e.g. impure hydraulic fluid, abrasion, or residual dirt from components). As a result, the hydraulic fluid flow and the build-up of torque in the axial piston unit can no longer respond correctly to the operator's specifications. Even the use of various filter elements (external or internal flow filter) will not rule out a fault but merely reduce the risk.
  The machine/system manufacturer must test whether remedial measures are needed on the machine for the application concerned in order to set the consumer being driven to a safe position (e.g. safe stop) and if necessary to ensure it is properly implemented.
- Moving parts in high-pressure relief valves may in certain circumstances become stuck in an undefined position due to contamination (e.g. contaminated hydraulic fluid). This can result in restriction or loss of the load holding function in lifting winches.
  The machine/system manufacturer must check whether additional measures are required on the machine for the relevant application in order to keep the load in a safe position and ensure they are properly implemented.
- When using the axial piston motor in winch drives, make certain that the technical limit values are not exceeded under all operating conditions. If the axial piston motor is extremely overloaded (e.g., if the maximum permissible rotational speeds are exceeded during weighing of the anchor while the ship is in motion), the rotary group may be damaged and, in the worst case, the axial piston motor may burst. The machine manufacturer/system manufacturer is to undertake additional measures, up to and including encapsulation.

External gear motors

Designation	Type	Size	Serie	Data sheet	Page
External gear motor High Performance	AZMB	1...7.1	3x	14027	679
External gear motor High Performance	AZMF AZMN AZMG	8...22 25...28 22...45	1x	14026	697

External gear motor High Performance
AZMB

- Platform B
- Fixed displacement
- Sizes 2.5 to 7.1
- Continuous pressure up to 220 bar
- Intermittent pressure up to 250 bar

Features

- Consistently high quality due to high-volume series production
- Long service life
- Large speed range
- Slide bearings for high loads
- Optional reversible version for 2-quadrant and 4-quadrant operation
- Variety of versions available
- Output shafts conform to ISO or SAE and customer-specific solutions
- Line connections: Connection flange or screw thread
- High pressures with small installation space and low weight
- Large viscosity and temperature range

Contents

Functional description	2
Type code	3
Technical data	4
Flow and power characteristic curves	6
Output drives	8
Gear motors with integrated valves	8
Dimensions – drive shafts	9
Dimensions – front cover	9
Dimensions – line connections	10
Dimensions – preferred series	11
Accessories	13
Spare parts	14
Notes on commissioning	15
Order number overview	16
AZ configurator	17
Fit4SILENCE app	17

RE 14027/03.2015, Bosch Rexroth AG

Functional description

General

If pressurized oil is fed into the motor, a torque can be obtained from the shaft leading out of the housing. Motors can be either for one direction of rotation or reversible.

Gear motor for one direction of rotation

These gear motors are designed asymmetrically, i.e., fixed high-pressure and low-pressure ends. This means they cannot be reversed. Motors require a special start-up sequence to ensure good efficiency. Any leakage oil is drained internally. The shaft seal limits drainage pressure.

Reversible gear motor

The displacement principle of external gear motors is the opposite of that of pumps. Reversible motors are an exception to this concept. Due to their symmetrical layout, the high-pressure and low-pressure chambers are separate from the bearing and shaft seal chambers. Any leakage oil is drained through a separate drain port in the housing cover. This drainage allows the motor to run in reverse, making series connections possible. Standard motors and pumps can only withstand up to approx. 3 bar due to the connection between the shaft seal and the low-pressure end.

The figure shows a reversible motor for four-quadrant operation, i.e., output torque and drive torque in both directions (hydraulic motor functions as a pump when the load is reversed).

▼ **Gear motor for one direction of rotation**

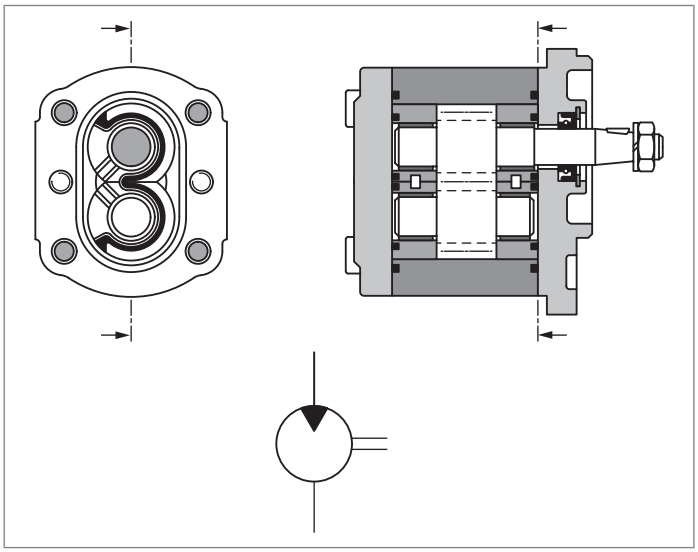

▼ **Reversible gear motor**

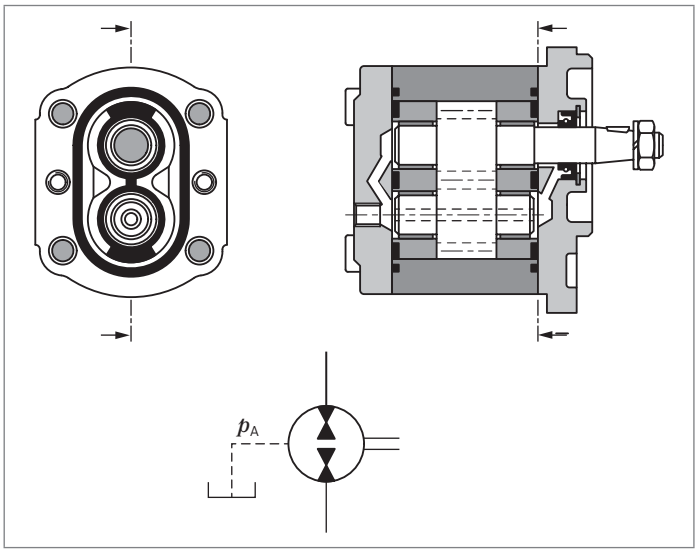

▼ **Product overview AZMB preferred types**

Version	
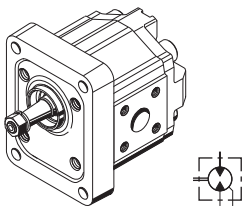	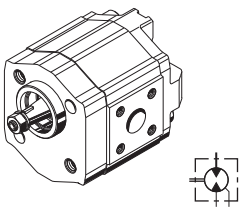
AZMB-32-...UHO20PL, page 11	**AZMB-32-...UCP20PL**, page 12

Type code

01	02		03	04		05	06	07	08	09	10	11		12
AZM	**B**	**–**			**–**								**–**	

External gear unit

01	External gear motor	**AZM**

Series

02	High Performance, Platform B	**B**

Series

03	Bearing pin Ø12 mm	**3**

Version

04	Corrosion-resistant, pinned	**2**

Size (NG)

05	Geometric displacement V_g [cm³], see “Technical data” on page 5	**2.5**	**3.1**	**4.0**	**4.5**	**5.0**	**6.3**	**7.1**

Direction of rotation

06	Viewed on drive shaft	Clockwise	**R**
		Counter-clockwise	**L**
		Universal	**U**

Drive shaft			**Suitable front cover**	
07	Tapered shaft	1 : 5	**P**	**C**
		1 : 8	**O**	**H**
	Dihedral, claw		**M**	**N**

Front cover

08	Rectangular flange	Ø25.38 mm		**O**
	2-bolt mounting	Ø32 mm	with O-ring	**M**
		Ø32 mm		**P**

Line connection

09	DIN EN ISO 228-1 pipe thread	**01**
	DIN 3852-1 metric thread	**02**
	Square flange for ISO 8434-1 fitting	**20**

Sealing material

10	NBR (nitrile rubber)	**M**
	FKM (fluoroelastomer)	**P**
	NBR (nitrile rubber), shaft seal made of FKM (fluoroelastomer)	**K**

Rear cover

11	Standard (for non-reversible motors)	**B**
	With drain port (for reversible motors)	**L**
	With axial pressure/suction port	**A**
	With pressure relief valve, internal residual current, 3-digit cracking pressure in bar, e.g., 180 bar	**D180**

Special version

12	Serial number, e.g., S0001	**SXXXX**

Notice

- Not all of the variants according to the type code are possible.
- Special options are available on request.
- Please select the desired motor with the help of the selection table (preferred types) or after consulting with Bosch Rexroth.

RE 14027/03.2012, Bosch Rexroth AG

Technical data

General				
Weight			kg	See dimensions starting on page 11
Installation position				No restrictions
Mounting type				Flange or through-bolting with spigot
Line connections				Flange, thread
Direction of rotation (viewed on drive shaft)				Non-reversible or reversible
Drive shaft load				Radial and axial forces only after consultation
Ambient temperature range θ			°C	-30 to +80 with NBR seals (NBR = nitrile rubber) -20 to +110 with FKM seals (FKM = fluoroelastomer)

Hydraulic				
Hydraulic fluid				Mineral oil according to DIN 51524 1–3, with higher load however at least HLP-compliant according to DIN 51524 Part 2 recommended. HEES according to DIN ISO 15380, FKM seals recommended. Observe data sheets 90220 and 90221. Other hydraulic fluids on request
Hydraulic fluid temperature range		θ	°C	-30 to +80 with NBR seals (NBR = nitrile rubber) -20 to +110 with FKM seals (FKM = fluoroelastomer)
Viscosity range	Minimum for continuous operation	ν	mm^2/sec	12 to 800
	Recommended for continuous operation	ν_{opt}	mm^2/sec	20 to 100
	Minimum for cold start	ν_{max}	mm^2/sec	≤ 2000
Maximum admissible degree of contamination of the hydraulic fluid Cleanliness level according to ISO 4406 (c)				Class 20/18/15[1], filter with min. retention rate of $\beta_{20} \geq 75$ recommended

Notice

- Observe applicable safety requirements for the entire system.
- Please contact us for applications with frequent load changes.

1) For hydraulic systems or devices with function-related critical failure effects, such as steering and brake valves, the type of filtration selected must be adapted to the sensitivity of these devices.

AZMB-3x			NG	2.5	3.1	4.0	4.5	5.0	6.3	7.1
Geometric displacement per revolution		V_g	cm³	2.5	3.15	4.0	4.5	5.0	6.3	7.1
Maximum drain port pressure[1]	abs.	p_L	bar	3	3	3	3	3	3	3
	On start-up	p_L	bar	10	10	10	10	10	10	10
Minimum motor input pressure[2]	abs.	p_{min}	bar	0.7	0.7	0.7	0.7	0.7	0.7	0.7
Maximum continuous pressure		p_1	bar	220	220	220	220	220	220	200
Maximum intermittent pressure		p_2	bar	250	250	250	250	250	250	230
Motor output pressure		p_A	bar	For reversible motors: ≤ working pressure For non-reversible motors: max. 3 bar absolute, 10 bar on start-up						
Minimum speed		n_{min}	rpm	750	750	750	750	750	750	750
Maximum speed	At p_1	n_{max}	rpm	5000	4000	4000	4000	4000	3500	3500

▼ **Pressure definition**

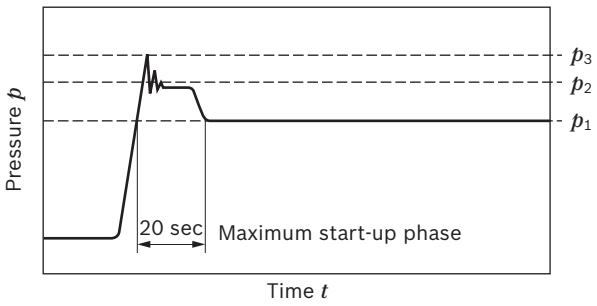

p_1 Maximum continuous pressure
p_2 Maximum intermittent pressure
p_3 Maximum pressure peak

Design calculations for motors

Inlet flow	$q_v = \frac{V_g \times n}{1000 \times \eta_v}$	[l/min]
Rotational speed	$n = \frac{q_v \times 1000 \times \eta_v}{V_g}$	[rpm]
Torque	$M = \frac{V_g \times \Delta p \times \eta_{hm}}{20 \times \pi}$	[Nm]
Power	$P = \frac{2 \pi \times M \times n}{60000} = \frac{q_v \times \Delta p \times \eta_t}{600}$	[kW]
Pressure	$\Delta p = \frac{M \times 20 \times \pi}{V_g \times \eta_{hm}}$	[bar]
	$\Delta p = \frac{P \times 600}{q_v \times \eta_t}$	[bar]
Displacement	$V_g = \frac{q_v \times 1000 \times \eta_v}{n}$	[cm³]
	$V_g = \frac{M \times 20 \times \pi}{\Delta p \times \eta_{hm}}$	[cm³]

Key

V_g Displacement per revolution [cm³]
Δp Differential pressure [bar] ($\Delta p = p_1 - p_A$)
n Rotational speed [rpm]
q_v Inlet flow [l/min]
M Torque [Nm]
P Power [kW]
η_v Volumetric efficiency[2]
η_{hm} Hydraulic-mechanical efficiency[2]
η_t Total efficiency ($\eta_t = \eta_v \times \eta_{hm}$)[2]

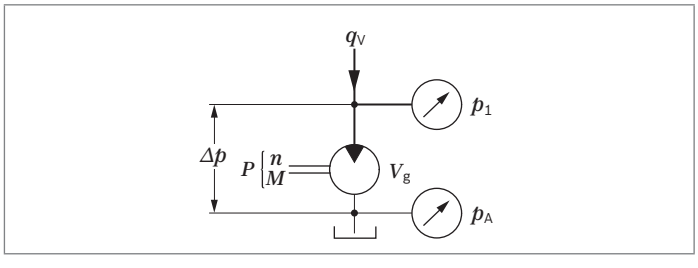

Notice
On the following pages you can find diagrams for a rough calculation.

1) For reversible motors
2) Parameter as a decimal, e.g., 0.9

Flow and power characteristic curves

▼ **Flow**

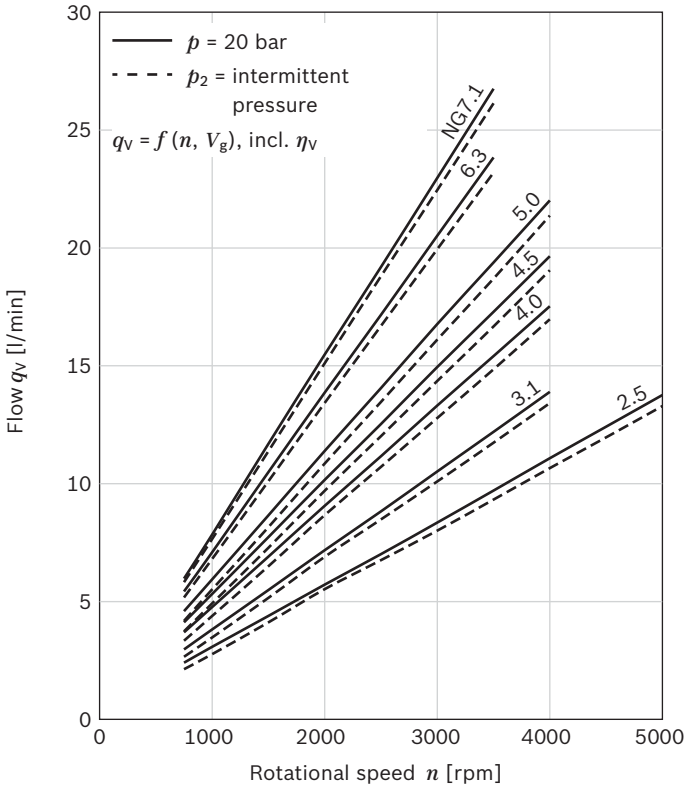

▼ **Size 2.5**

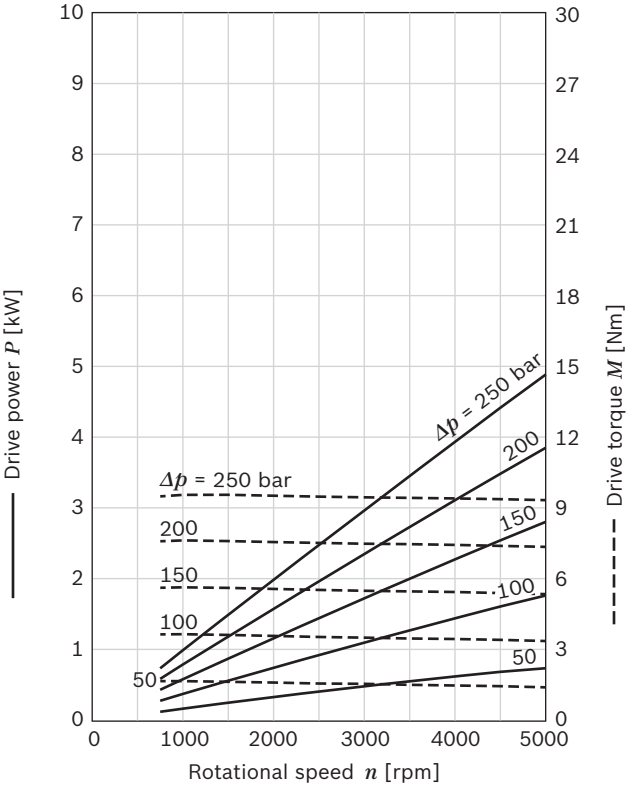

▼ **Size 3.1**

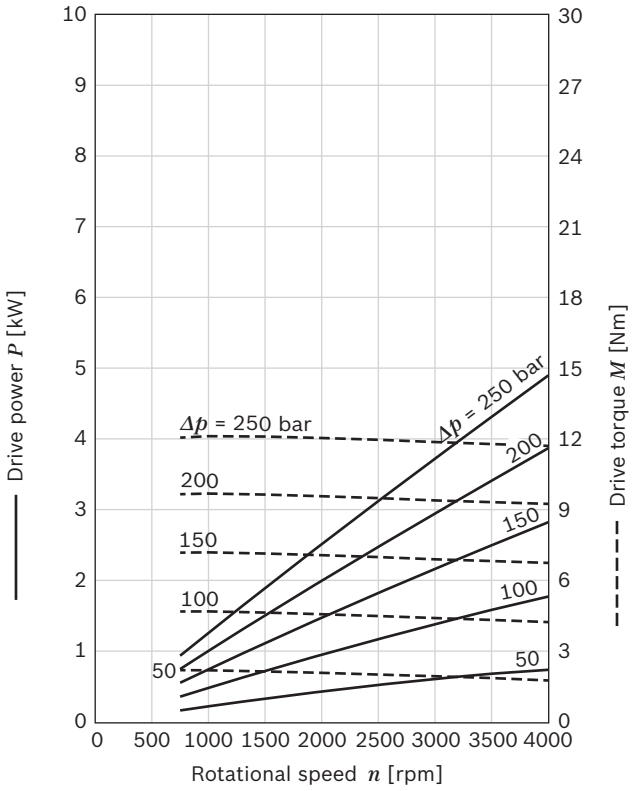

▼ **Size 4.0**

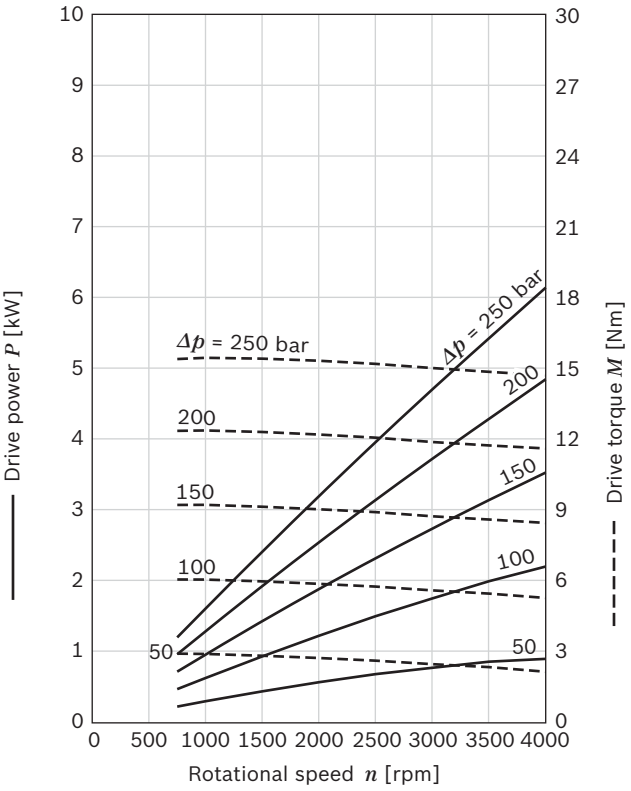

▼ **Size 4.5**

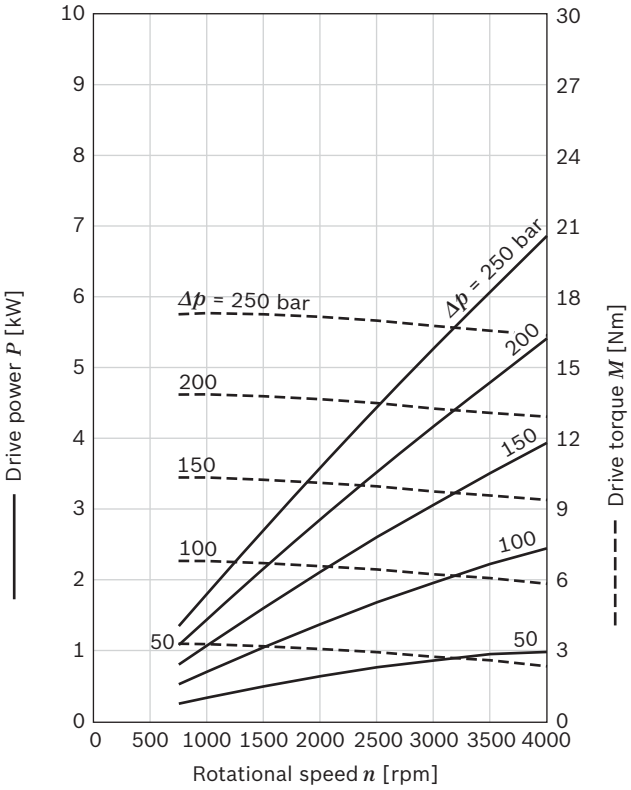

▼ **Size 5.0**

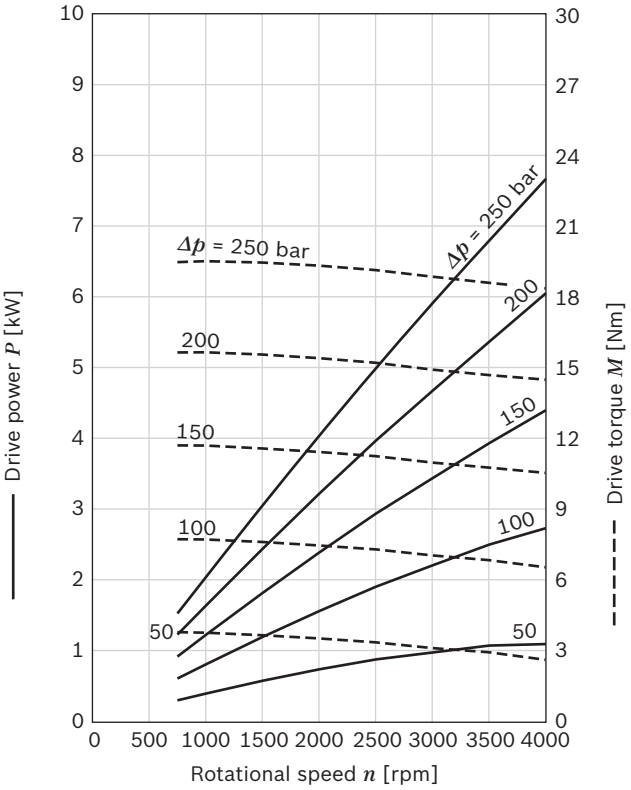

▼ **Size 6.3**

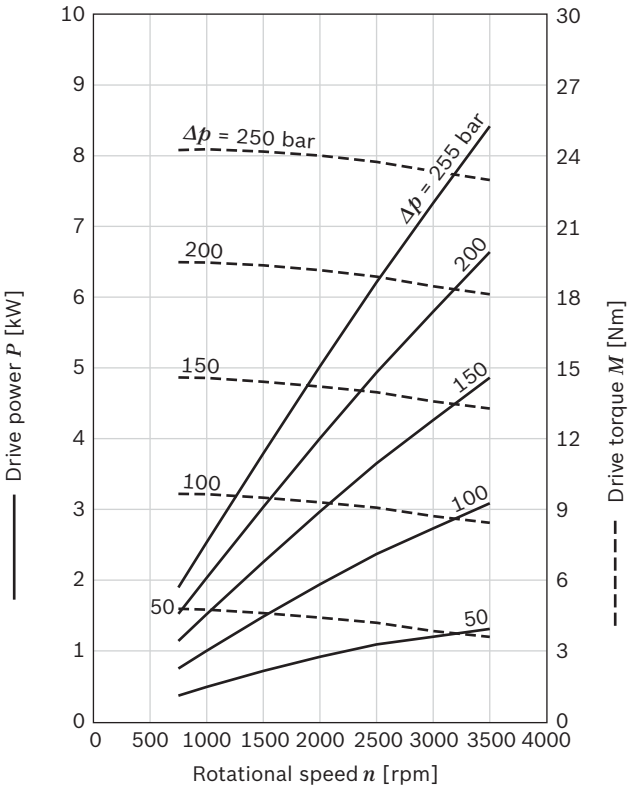

▼ **Size 7.1**

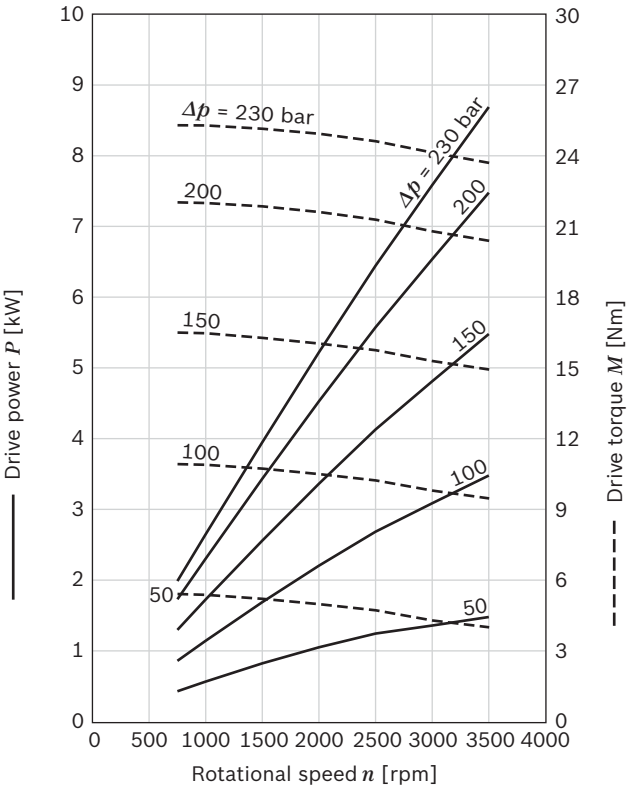

Notice

Characteristic curves measured at ν = 32 mm²/sec and θ = 50 °C.

$P = f(n, p)$, incl. η_t ——————

$M = f(n, p)$, incl. η_{hm} - - - - - -

Output drives

1. Elastic couplings

- The coupling should not transfer any radial or axial forces to the motor.
- The maximum radial run-out from the shaft to the spigot should not exceed 0.2 mm.
- See the coupling manufacturer's assembly instructions for permissible shaft misalignments.

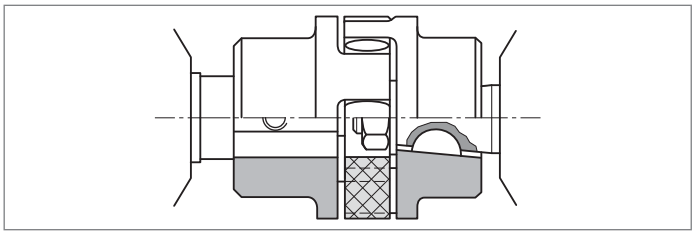

2. Coupling dog

- For attaching the motor directly to a gear, etc.
- Motor drive shaft with special coupling dog and driver (**3**)
- No shaft seal
- Output side installation and sealing according to following recommendations and dimensions

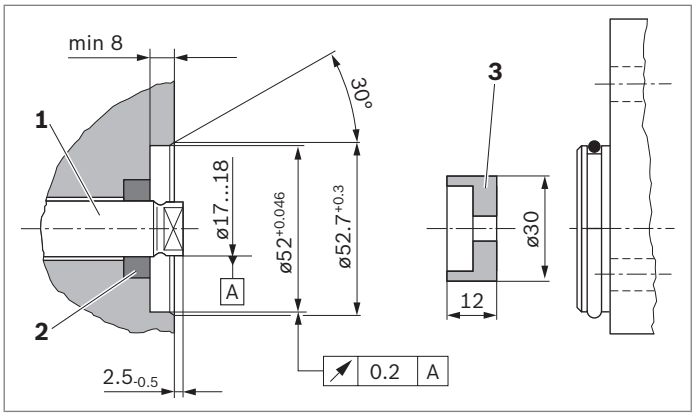

Drive shaft	M_{max} [Nm]	Size	p_{max} [bar]
C	26	2.5 to 5.0	270
		6.3	230
		7.1	205
H	30	2.5 to 6.3	270
		7.1	235
N	25	2.5 to 5.0	270
		6.3	225
		7.1	200

- **Output shaft on the customer side (1)**
  - Case-hardening steel as per DIN 17210 e.g., 20 MnCrS 5 case-hardened 0.6 deep; HRC 60$^{\pm 3}$
  - Seal ring running surface ground without rifling $R_{max} \leq 4\ \mu m$
- **Radial shaft seal on the customer side (2)**
  - Provide with rubber cover (see DIN 3760, type AS, or double-lipped ring)
  - When designing the installation space, note the seal manufacturer's design guidelines.

Gear motors with integrated valves

In order to reduce pipework, a pressure relief valve can be integrated into the cover of the gear motor.

▼ **Pressure relief valve, pressure guide in suction line**
p_1 = 5 to 250 bar

D180XX (example)

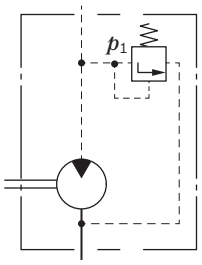

Dimensions – drive shafts

▼ **Tapered shaft 1 : 5**

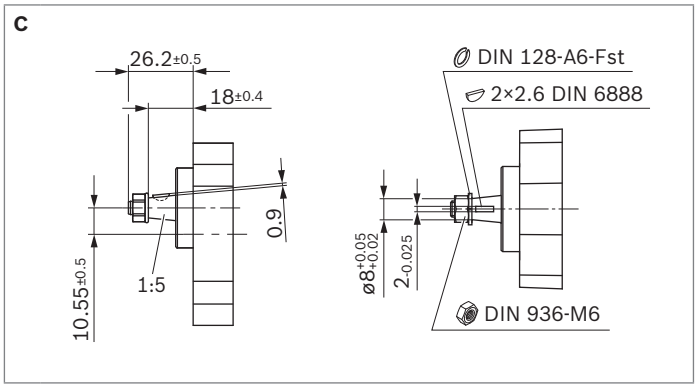

▼ **Tapered shaft 1 : 8**

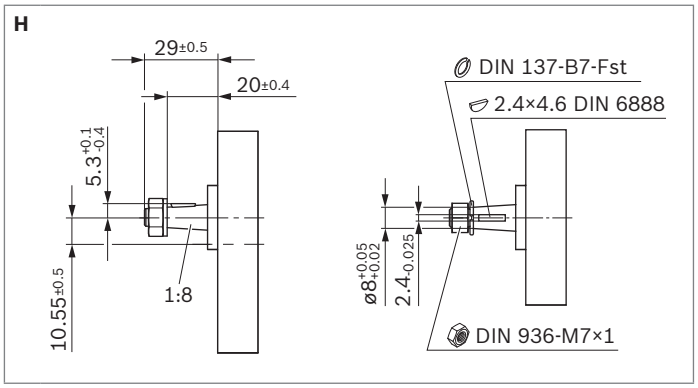

▼ **Dihedral claw**

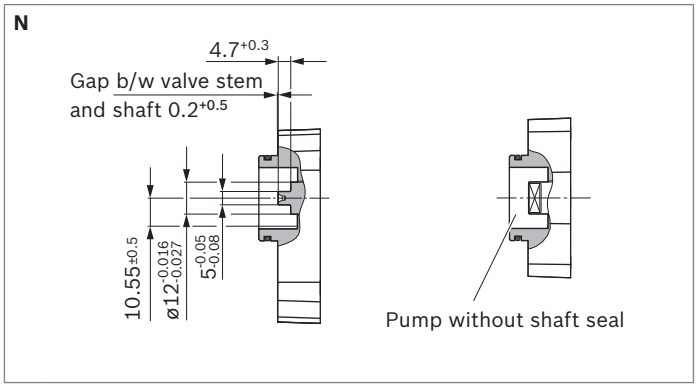

Dimensions – front cover

▼ **2-bolt mounting Ø32 mm**

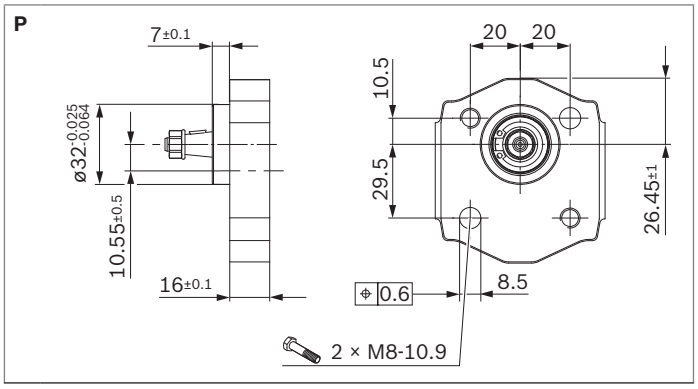

▼ **Rectangular flange Ø25.28 mm**

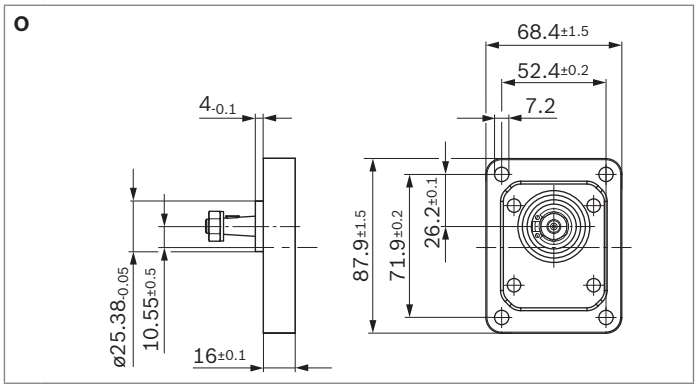

▼ **2-bolt mounting Ø32 mm with O-ring**

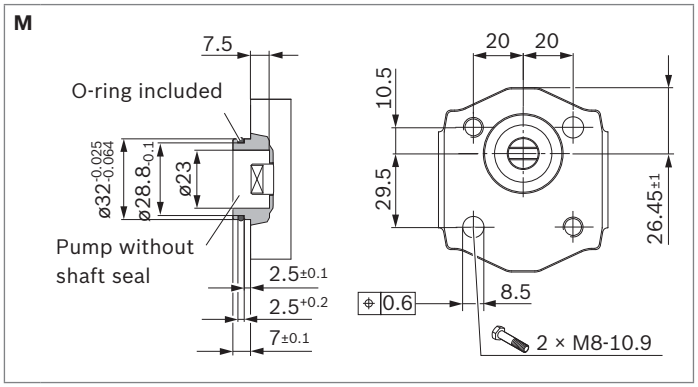

5

Dimensions – line connections

▼ **ISO 228/1 pipe thread** (limited service life compared to line connection 20)

01

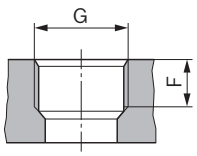

Size	Upstream side		Downstream side	
	G	F	G	F
2.5 to 3.1	G 3/8	13	G 3/8	13
4.0 to 7.1	G 3/8	13	G 1/2	13

▼ **ISO 9974-1 pipe thread** (limited service life compared to line connection 20)

02

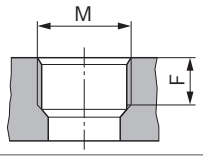

Size	Upstream side		Downstream side	
	M	F	M	F
2.5 to 3.1	14 × 1.5	13	M18 × 1.5	13
4.0 to 7.1	14 × 1.5	13	M22 × 1.5	13

▼ **Square flange**

20

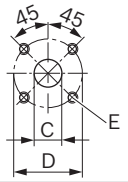

Size	Upstream side			Downstream side		
	C	D	E	C	D	E
2.5	12	30	M6; 13 deep	12	30	M6; 11.5 deep
3.1 to 7.1	15	35	M6; 13 deep	15	35	M6; 11.5 deep

Dimensions – preferred series

▼ **Tapered shaft 1:8 with rectangular flange Ø25.38 mm**
AZMB–32– … **UHO20**PL

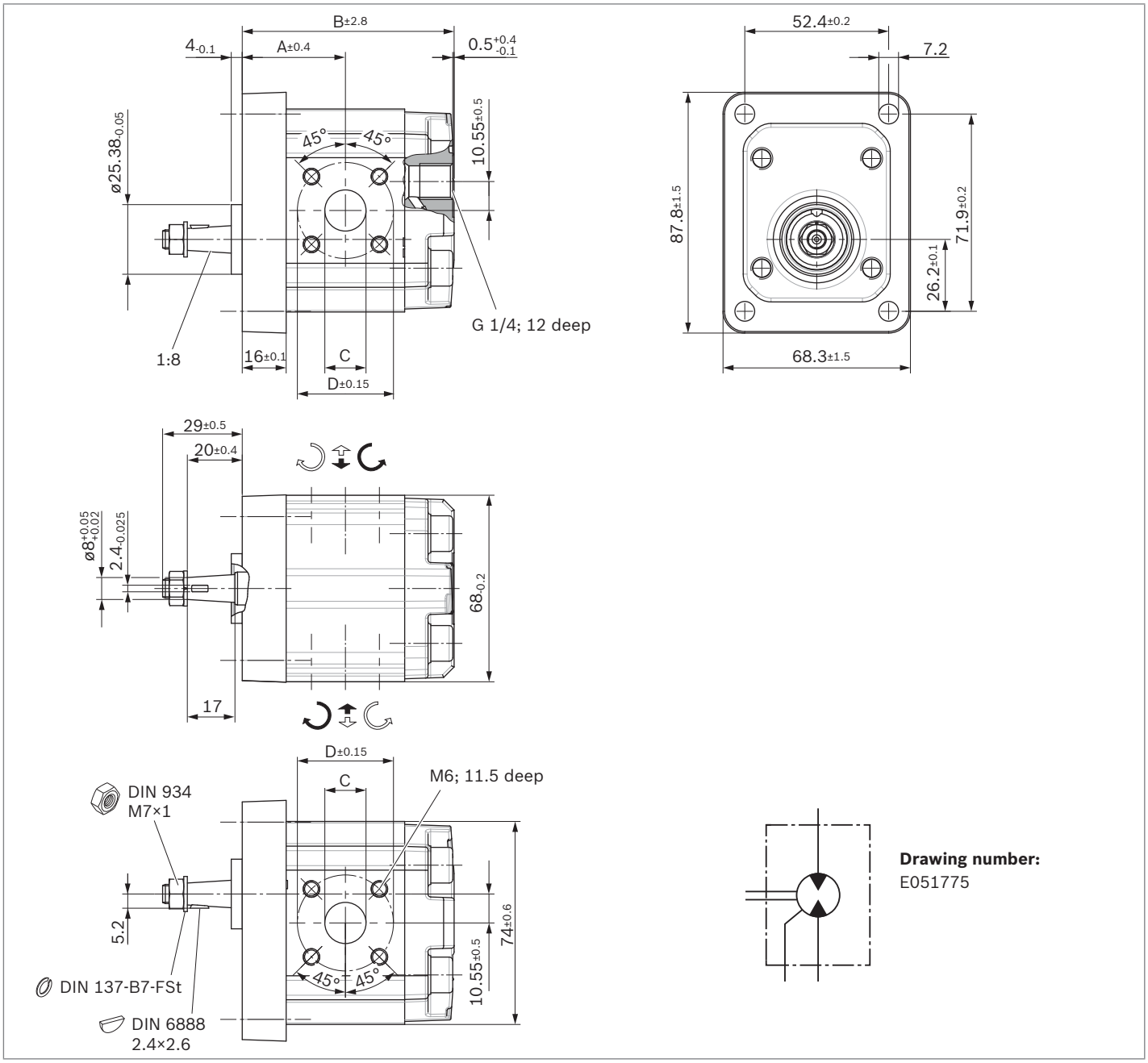

Drawing number:
E051775

NG	Order number Direction of rotation universal	Maximum intermittent pressure p_2 [bar]	Maximum rotational speed [rpm]	Weight [kg]	Dimensions [mm]			
					A	B	C	D
2.5	R979106592	250	5000	1.5	33.8	69.6	12	30
3.1	R979106593	250	4000	1.5	35.0	72.1	15	35
4.0	R979106594	250	4000	1.6	36.6	75.3	15	35
4.5	R979106252	250	4000	1.6	37.6	77.2	15	35
5.0	R979106595	250	4000	1.6	38.6	79.3	15	35
6.3	R979106596	250	3500	1.7	41.0	84.0	15	35
7.1	R979106597	230	3500	1.7	42.5	87.1	15	35

RE 14027/03.2012, Bosch Rexroth AG

▼ **Tapered shaft 1:5 with rectangular flange Ø32 mm**
AZMB–32– ... **UCP20**PL

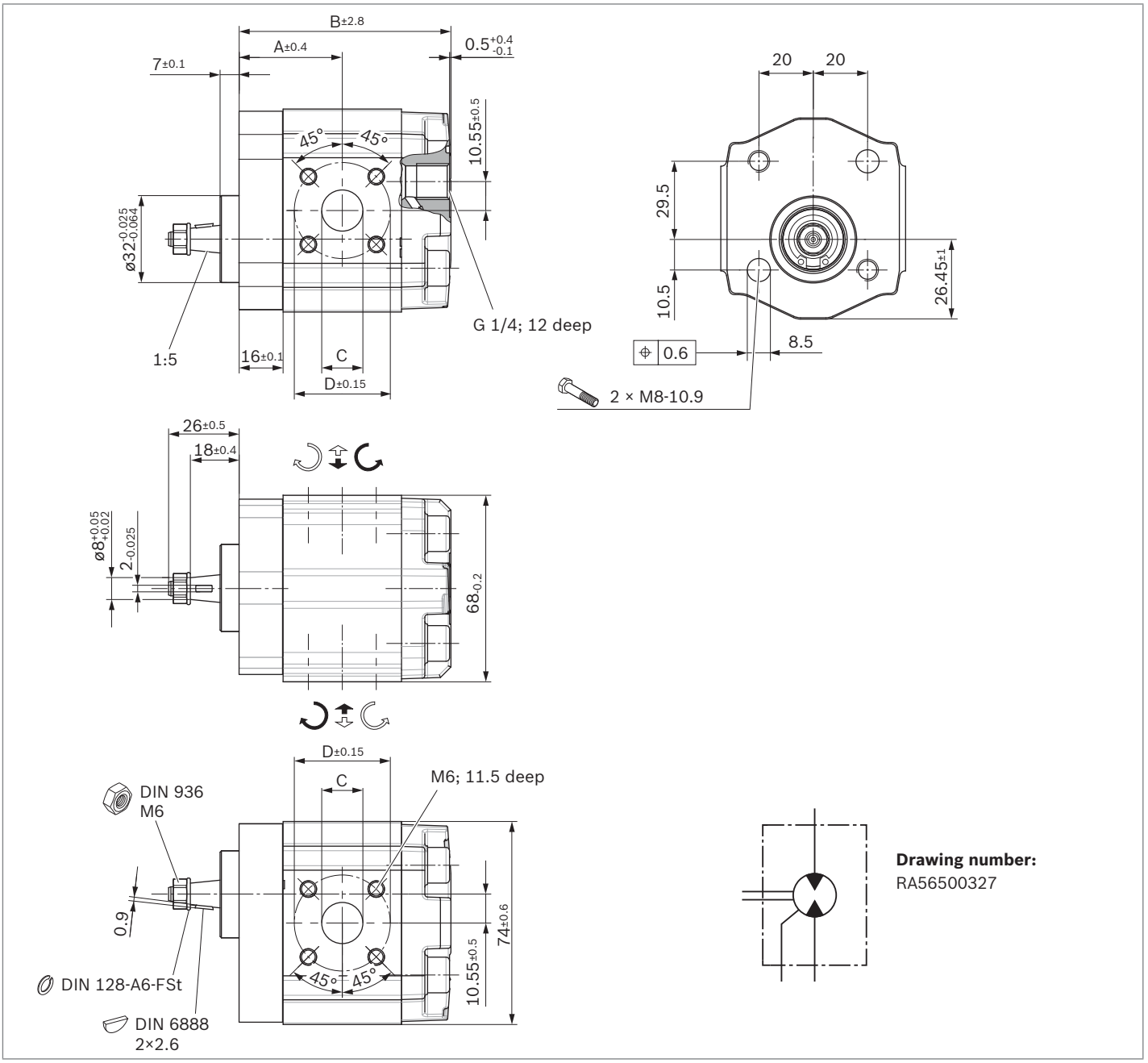

Drawing number:
RA56500327

NG	Order number Direction of rotation universal	Maximum intermittent pressure p_2 [bar]	Maximum rotational speed [rpm]	Weight [kg]	Dimensions [mm]			
					A	B	C	D
2.5	R979106804	250	5000	1.5	33.8	69.6	12	30
3.1	R979106805	250	4000	1.5	35.0	72.1	15	35
4.0	R979106806	250	4000	1.6	36.6	75.3	15	35
4.5	R979106807	250	4000	1.6	37.6	77.2	15	35
5.0	R979106808	250	4000	1.6	38.6	79.3	15	35
6.3	R979106809	250	3500	1.7	41.0	84.0	15	35
7.1	R979106810	230	3500	1.7	42.5	87.1	15	35

Accessories

Gear motor flanges, straight, for square flange 20 (see page 10)

Complete fitting with O-ring, metric screw set, nuts and olive.

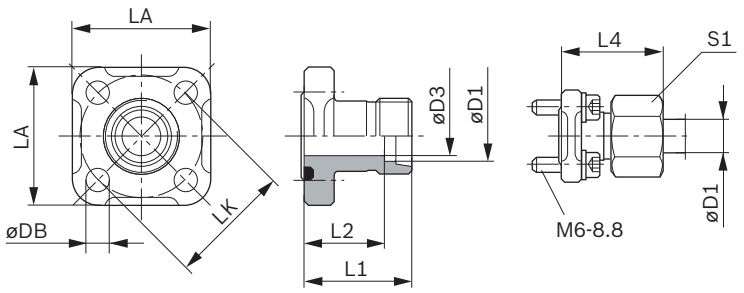

LK	D1	D3	L1	L2	L4	LA	S1	DB	Screws 4x	O-ring NBR	Weight [kg]	Order number	p [bar]
35	10L	8	30	23.0	39.0	40	19	6.4	M6 × 22	20 × 2.5	0.09	1 515 702 064	315
35	12L	10	30	23.0	39.0	40	22	6.4	M6 × 22	20 × 2.5	0.10	1 515 702 065	315
35	15L	12	30	23.0	38.0	40	27	6.4	M6 × 22	20 × 2.5	0.10	1 515 702 066	250

Gear pump flanges, 90° angle, for square flange 20 (see page 10)

Complete fitting with O-ring, metric screw set, nuts and olive.

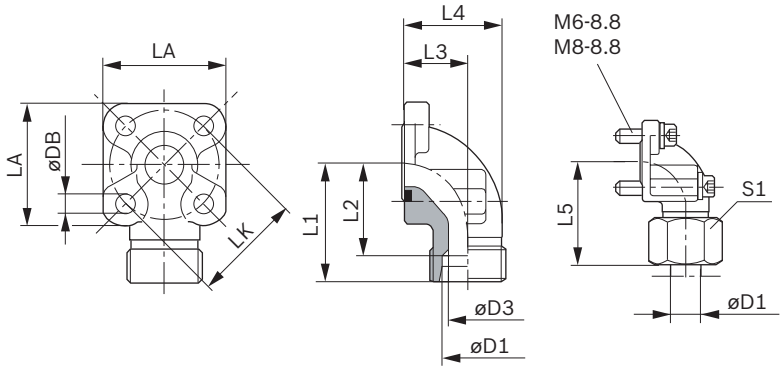

LK	D1	D3	L1	L2	L3	L4	L5	LA	S1	DB	Screws 2x	Screws 2x	O-ring NBR	Weight [kg]	Order number	p [bar]
35	10L	8	38	31.0	16.5	26.5	47.0	40	19	6.4	M6 × 22	M6 × 35	20 × 2.5	0.16	1 515 702 070	315
35	12L	10	38	31.0	16.5	26.5	47.0	40	22	6.4	M6 × 22	M6 × 35	20 × 2.5	0.16	1 515 702 071	315
35	15L	12	38	31.0	16.5	26.5	46.0	40	27	6.4	M6 × 22	M6 × 35	20 × 2.5	0.15	1 515 702 072	250
35	16S	12	38	29.5	20.0	31.0	48.0	40	30	6.4	M6 × 22	M6 × 40	20 × 2.5	0.18	1 515 702 002	315
35	18L	15	38	29.5	20.0	31.0	47.0	40	32	6.4	M6 × 22	M6 × 40	20 × 2.5	0.18	1 545 702 006	250
35	20S	16	45	34.5	25.0	38.0	56.0	40	36	6.4	M6 × 22	M6 × 45	20 × 2.5	0.24	1 515 702 017	315

Notice
You can find the permissible tightening torques in our publication 07012-B1 “General Instruction Manual for External Gear Units”.

RE 14027/03.2012, Bosch Rexroth AG

Spare parts

Item	Designation	Order number	Dimensions	Material	AZMB-32 – ... R ...	AZMB-32 – ... L ...	AZMB-32 – ... U ...
3	Shaft seal	1 510 283 074	22 × 12 × 6	NBR	x	x	x
		1 510 283 071	22 × 12 × 6	FKM	x	x	x
800	Seal kit	1 517 010 248		NBR	x	x	–
		1 517 010 269		FKM	x	x	–
		1 517 010 251		FKM	–	–	x

▼ **Schematic diagram**

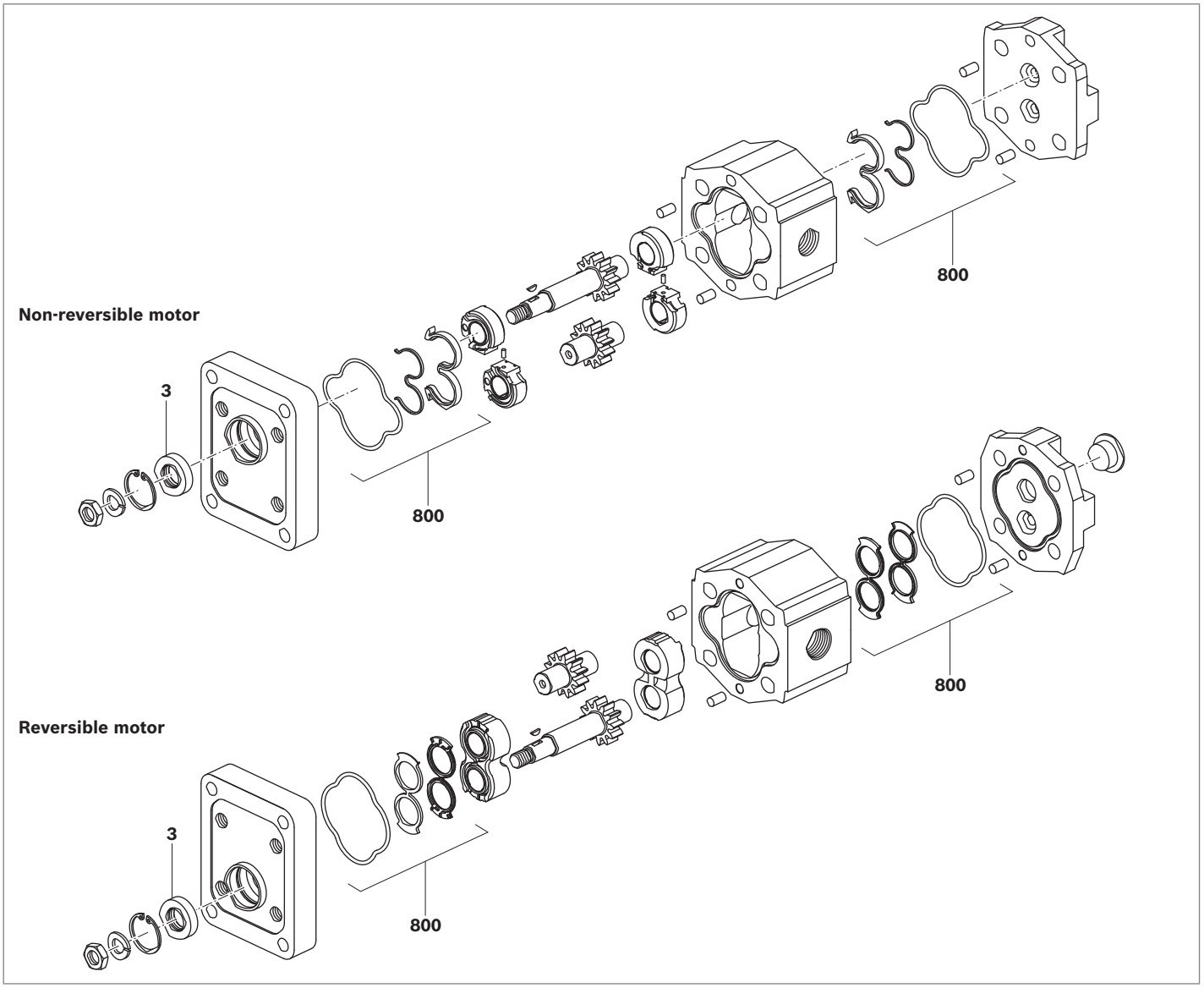

Notes on commissioning

General
Motors delivered by Bosch Rexroth are tested for function and performance. Any modifications will void the warranty. The motor should only be operated with the permissible data (see page 4).

Technical data
All specified technical data depends on manufacturing tolerances and apply under certain general conditions. Note that this can result in some variance and that technical data may also vary under certain general conditions (e.g., viscosity).

Characteristic curves
When dimensioning the gear motor, observe the maximum possible application data based on the characteristic curves starting on page 6.

Scope of delivery
The scope of delivery includes the components with the characteristics described under type codes and dimensions starting on page 11.

Further information
- Further information on installation, commissioning, and operation can be found in the publication 07012-B1: “General Instruction Manual for External Gear Units”.
- Extensive notes and suggestions can be found in the Hydraulic Trainer Vol. 3: “Project planning recommendations and design of hydraulic systems”, order number R900018547.

Filter recommendation
Since the majority of premature failures in gear motors occur due to contaminated hydraulic fluid, filtration should maintain a cleanliness level of 20/18/15 as defined by ISO 4406. Cleanliness level 20/18/15 can reduce contamination to an acceptable degree in terms of particle size and concentration.

Bosch Rexroth generally recommends full-flow filtration. Basic contamination of the hydraulic fluid should not exceed class 20/18/15 as defined by ISO 4406. New fluids are often above this value. In such instances, a filling device with a special filter should be used.
Bosch Rexroth is not liable for wear due to contamination.

Order number overview

Order number	Type	Page
R979106252	AZMB–32–4.5UHO20PL	11
R979106592	AZMB–32–2.5UHO20PL	11
R979106593	AZMB–32–3.1UHO20PL	11
R979106594	AZMB–32–4.0UHO20PL	11
R979106595	AZMB–32–5.0UHO20PL	11
R979106596	AZMB–32–6.3UHO20PL	11
R979106597	AZMB–32–7.1UHO20PL	11
R979106804	AZMB–32–2.5UCP20PL	12
R979106805	AZMB–32–3.1UCP20PL	12
R979106806	AZMB–32–4.0UCP20PL	12
R979106807	AZMB–32–4.5UCP20PL	12
R979106808	AZMB–32–5.0UCP20PL	12
R979106809	AZMB–32–6.3UCP20PL	12
R979106810	AZMB–32–7.1UCP20PL	12

AZ configurator

With our practical product selector, it will take you next to no time to find the right solution for your applications, no matter whether it is High Performance or another external gear unit.
The selector guides you through a selection of features to all of the products available for order. By clicking on the order number, you can view and download the following product information: Data sheet, dimension sheet, instruction manual, operating conditions, and tightening torques.
You can order your selection directly via our online shop and at the same time benefit from an additional discount of 2%.
And if you need something really quickly, simply use our fast delivery and preferred programs (GoTo). Then the goods will be sent within 10 business days.
You also have the possibility to easily and conveniently configure your individual external gear unit with our AZ configurator. All the necessary data that you need for the project planning of external gear units is requested by means of the menu navigation.
For an already existing configuration you receive as a result the order number, the type code, as well as further information. If your configuration does not lead to a product that is available for order, our online tools provide you with the possibility of sending a project request directly to Bosch Rexroth. We will then get in contact with you.

Fit4SILENCE app

You want to quickly determine the noise level of an application but don’t have a measuring device at hand? No problem with Fit4SILENCE! Our new noise measurement app for all Android devices can be immediately downloaded free of charge. After calibration, you can start using it straight away and conduct fast, accurate noise measurements with different weightings in no time at all. An additional measuring device is no longer necessary, because calibrated smartphones using the app can achieve an accuracy that approximates professional measuring devices.
Last but not least, the app contains interesting information about the SILENCE PLUS technology, including an audio sample.

External Gear Motors

AZMF ..., AZMN ..., AZMG ...

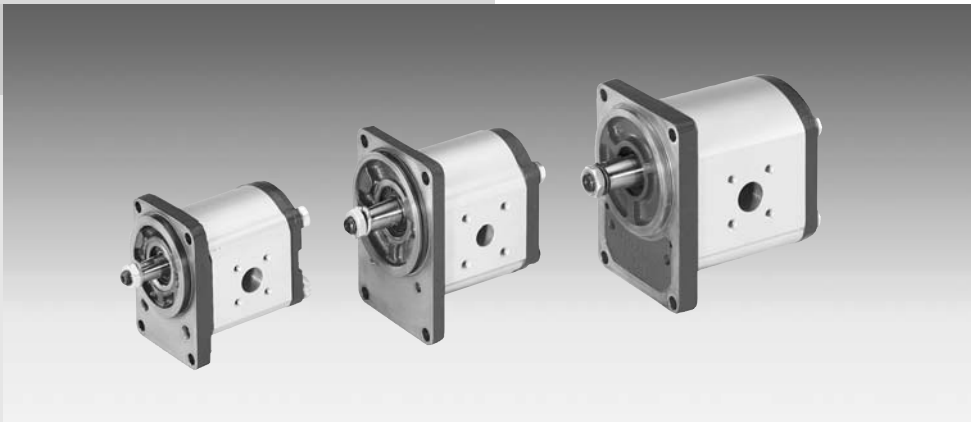

Model F = 8 ... 22.5 cm³/rev
N = 25 und 28 cm³/rev
G = 22.5 ... 45 cm³/rev

Contents

	Page
Function	2
Overview	3
Ordering code	4
Drive shaft	6
Front cover	7
Port connections	8
Motors with integral Valves and Sensors	9
Design calculations for Motors	10
Diagrams	10
Specifications	14
Drive arrangement	16
Connectors	17
Dimension Drawings	19
Notes	40

General

Rexroth external gear motors are produced in 3 different models, with different displacements being produced by means of gears of differing widths.
Different versions of motors are achieved by the use of different flanges, shafts, valves and integrated speed sensors.

Features

- High pressures combined with small size and low weight
- Large speed ranges
- Broad viscosity and temperature ranges
- Reversible motors for 2- and 4-quadrant operation

Fields of application

- Road construction machines as road rollers and pavers
- Agricultural machines and forestry technology as harvesters and forestry machines
- Street vehicles such as busses, trucks and special vehicles and above all in hydrostatic fan drives.

Function

If pressurized oil is fed into the motor, a torque can be obtained from the shaft leading out of the housing. Here, a distinction is made between motors that rotate on one direction and reversible motors.

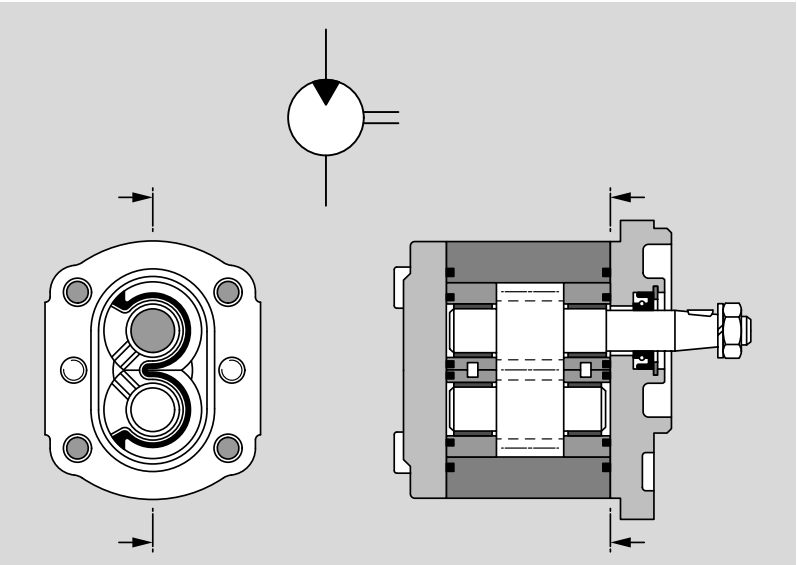

External gear motors that rotate in one direction

These are of asymmetrical design, i.e. the high and low pressure sides are defined and not interchangeable at will. In this case, reversible operation is not possible. In order to ensure a high efficiency level, a special running-in method is used for motors. Leakage oil is discharged internally to the outlet side. Pressure loading of the outlet is limited by the shaft seal.

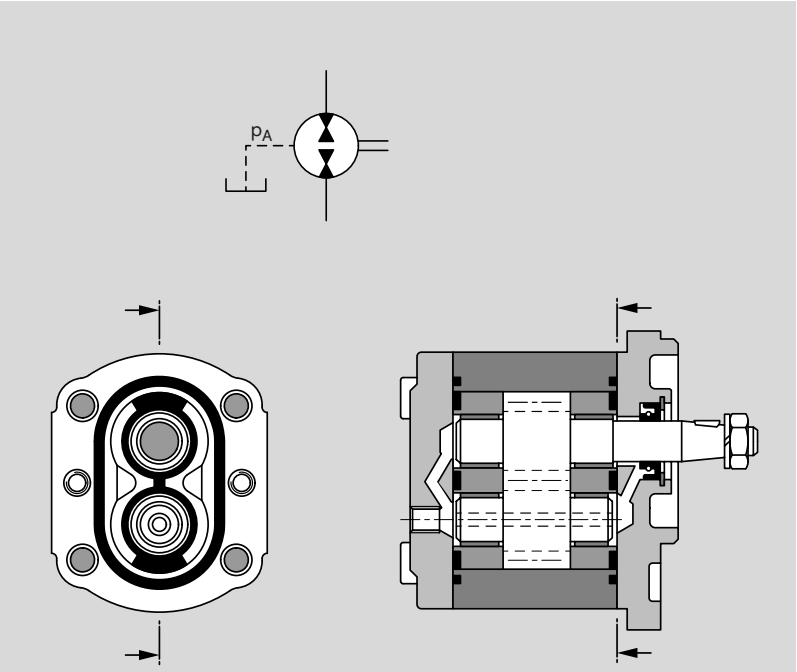

Reversible external gear motors

The displacement method in external gear motors is the reverse of the pump process. Reversible motors have a special feature, however. Their symmetrical construction means that the high or low pressure chambers are separate from the bearing and shaft seal chamber. The resulting leakage oil is routed through a separate oil drain gland in the housing cover. This oil drainage enables the motor to be subjected to load via the return line, which in turn allows the use of series connections. Due to the connection between the shaft seal and the low-pressure end, however, standard motors and pumps can only withstand a pressure of up to approx. 3 bar.

The figure shows a reversible gear motor for 4-quadrant operation, i.e. both output and input torque in both directions. (Hydraulic motor becomes a pump if load reversal occurs.)

Product overview “Model F” preferential range

Version	Page
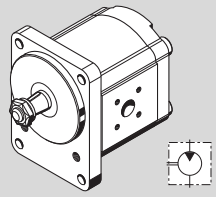	19
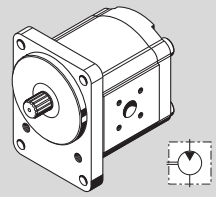	20
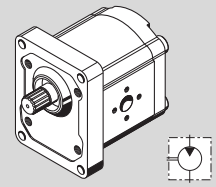	21
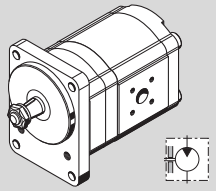	22
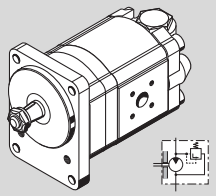	23

Version	Page
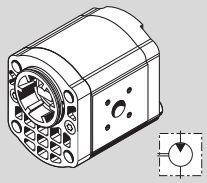	24
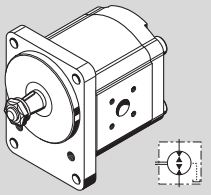	25
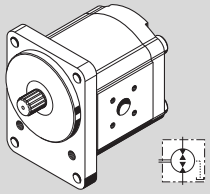	26
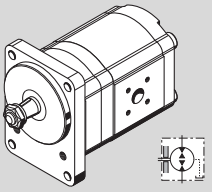	27
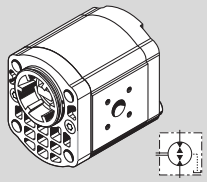	28

Version	Page
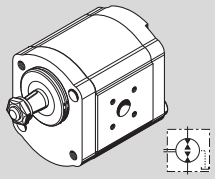	29
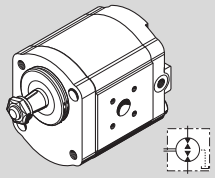	30
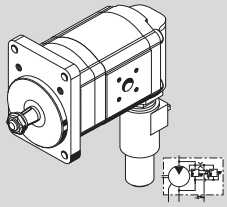	31
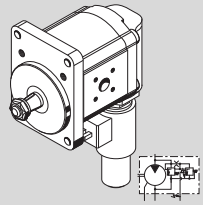	32
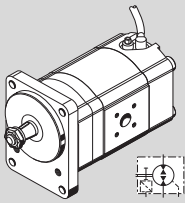	34

Product overview “Model N” preferential range

Version	Page
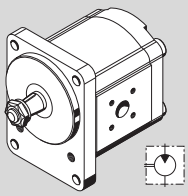	35

Version	Page
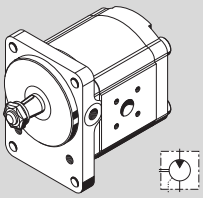	36

Product overview “Model G” preferential range

Version	Page
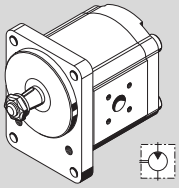	37

Version	Page
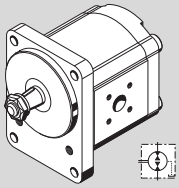	38

Version	Page
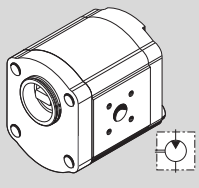	39

Ordering code

External Gear Motors Model “F”

AZ	M	F	–	1x	–	022	R	C	B	20	M	B	200xx	–	S0001

Function

M = Motor

Series

1x = Standard bearing

Size (F)

8.0 cm³/rev	= **008**
11.0 cm³/rev	= **011**
14.0 cm³/rev	= **014**
16.0 cm³/rev	= **016**
19.0 cm³/rev	= **019**
22.5 cm³/rev	= **022**

Direction of rotation

Right	= **R**
Left	= **L**
Universal	= **U**

Special design*)

Valve adjustment

PRV 200 bar	= **200 xx**
PRV	= **180 xx**

Rear cover

Standard	= **B**
PRV	= **G**
drain oil line connection (axial)	= **L**
PRV excess flow internal	= **D**

Seals

NBR	= **M**
FPM	= **P**
NBR, WDR in FPM	= **K**

*) The special equipments partly contained on the pages 20–35, are not considered in the representation of the ordering code.

Drive shafts

		suitable front cover	
C	Tapered keyed shaft 1 : 5	**B**	**P**
N	Tang drive	**T**	
F	Spline shaft DIN 5482 B 17 x 14	**B**	**P**
S	Tapered keyed shaft 1 : 5 for flange A	**A**	

Front cover

B	Square flange Centring Ø 80 mm
P	2-bolt mounting Centring Ø 50 mm
O	Square flange Centring Ø 36.47 mm
A	Outboard bearing Ø 80 mm, Type 1
N	2-bolt mounting Centring Ø 50 mm
T	4-bolt mounting Ø 52 mm, with O-ring

Port connections

20	Rectangular flange
30	Rectangular flange

Ordering code

External Gear Motors Model “N”

AZ	M	N	–	1x	–	020	R	C	B	20	M	B		–	S0001

Function
M = Motor

Series
1x = Standard bearing

Size (N)
25.0 cm³/rev = **025**
28.0 cm³/rev = **028**

Direction of rotation
Right = **R**
Left = **L**

Special design

Rear cover
Standard = **B**
Special design = **X**

Seals
NBR = **M**
FPM = **P**

Drive shafts

		suitable front cover
C	Tapered keyed shaft 1 : 5	**B**

Front cover

B	Square flange Centring Ø 100 mm

Port connections

20	Rectangular flange

External Gear Motors Model “G”

AZ	M	G	–	1x	–	022	R	C	B	20	M	B		–	S0001

Function
M = Motor

Model
G = 22.5...56 cm³/rev

Size (G)
22.5 cm³/rev = **022**
28.0 cm³/rev = **028**
32.0 cm³/rev = **032**
45.0 cm³/rev = **045**

Direction of rotation
Right = **R**
Left = **L**
Universal = **U**

Special design

Rear cover
Standard = **B**
Special design = **X**

Seals
NBR = **M**
NBR, WDR in FPM = **K**

Drive shafts

		suitable front cover
C	Tapered keyed shaft 1 : 5	**B**
N	Tang drive	**M**

Front cover

B	Square flange Centring Ø 105 mm
M	2-bolt mounting Ø 52 mm, with O-ring

Port connections

20	Rectangular flange

Drive shaft model “F”

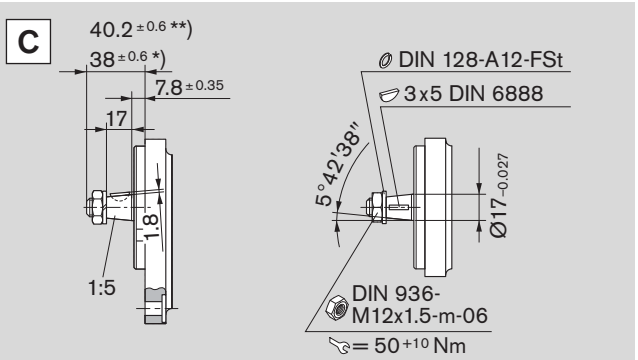

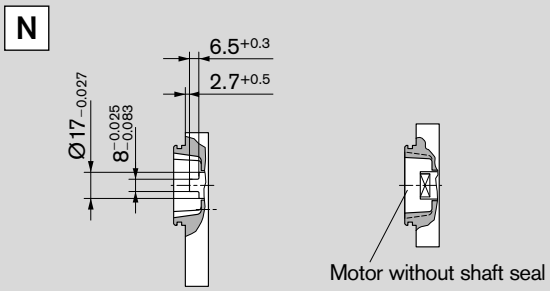

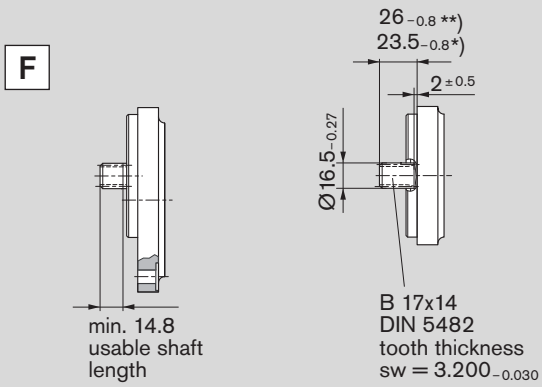

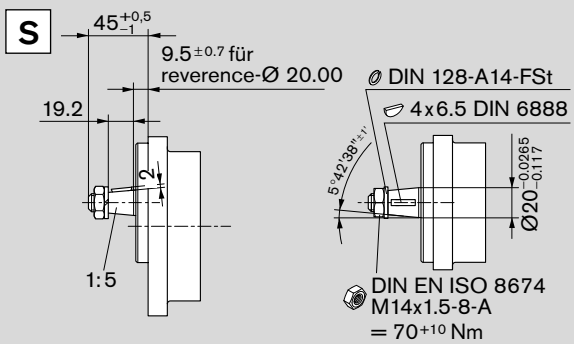

Drive shaft model “N”

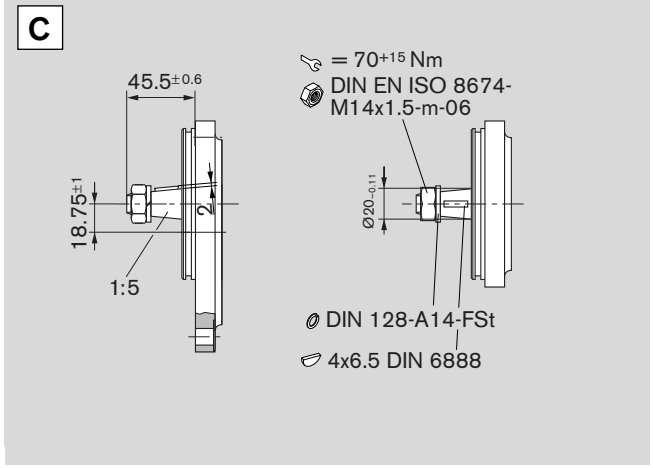

*) in combination with front cover B

**) in combination with front cover P

Drive shaft model “G”

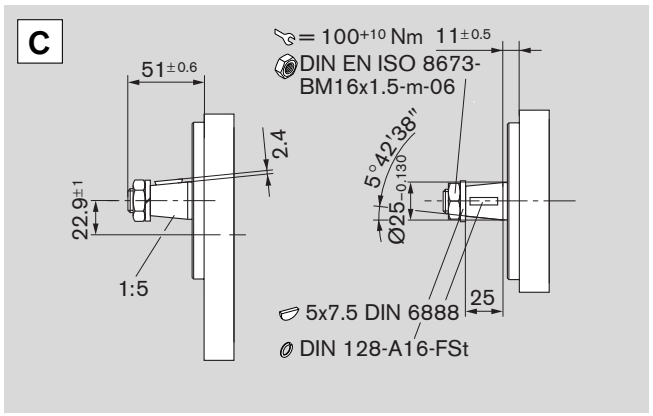

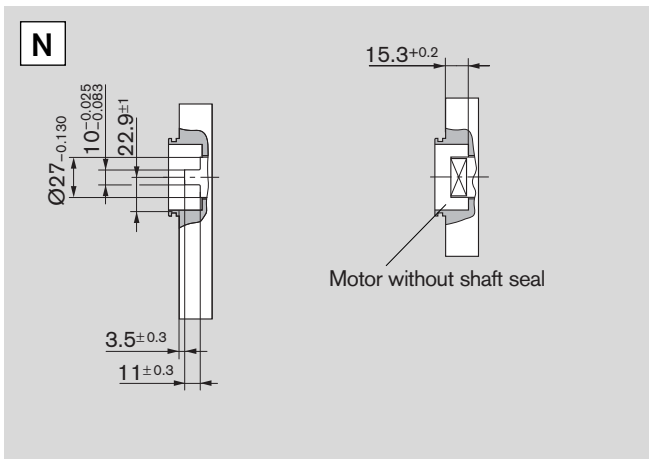

Front cover model “F”

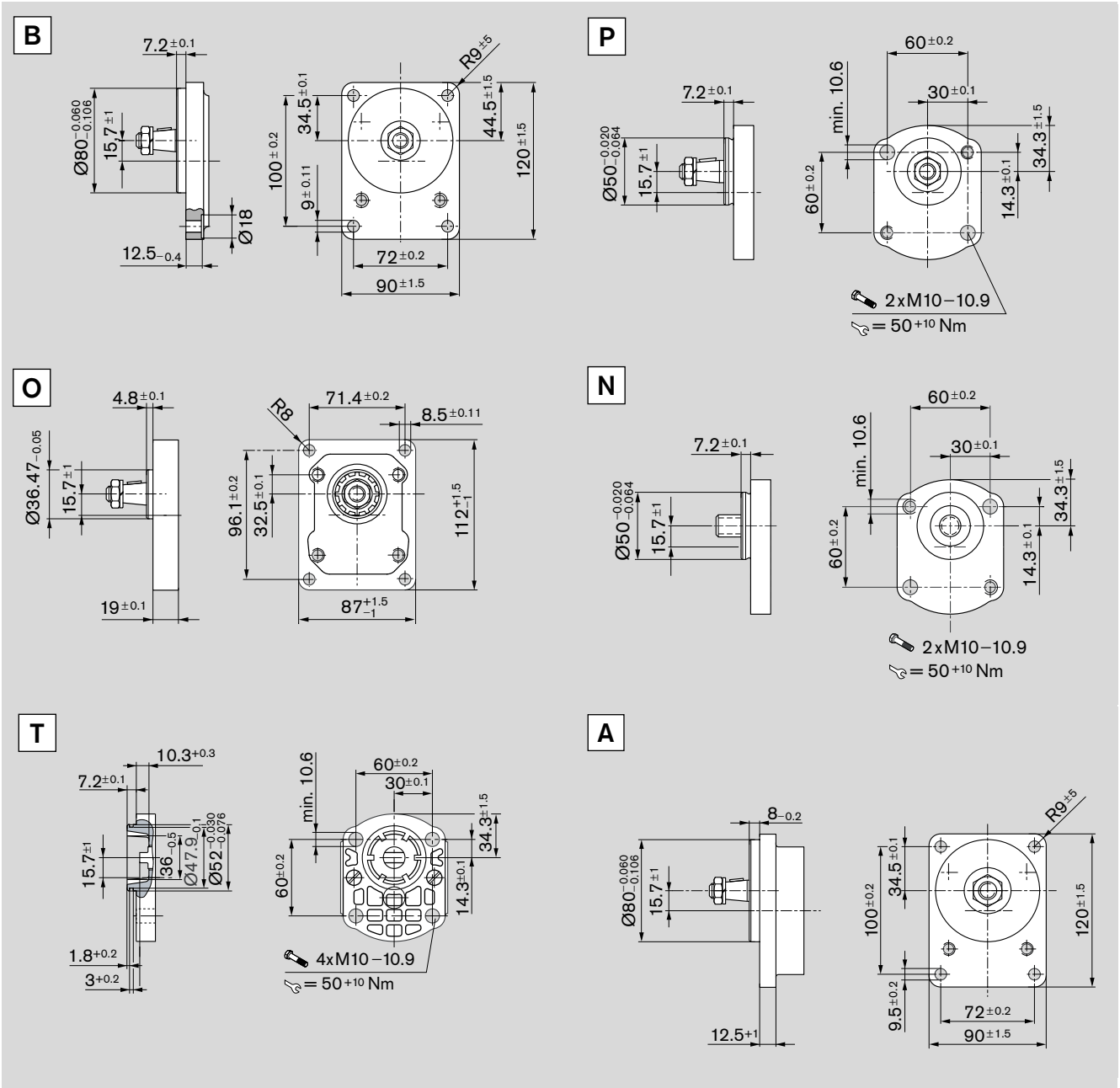

Front cover model “N”

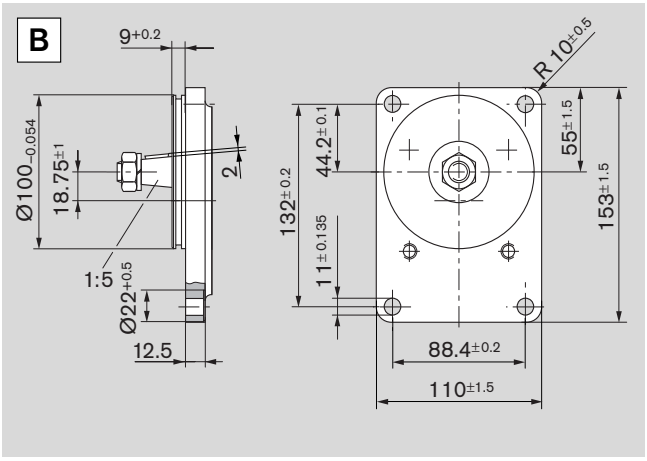

5

Front cover model “G”

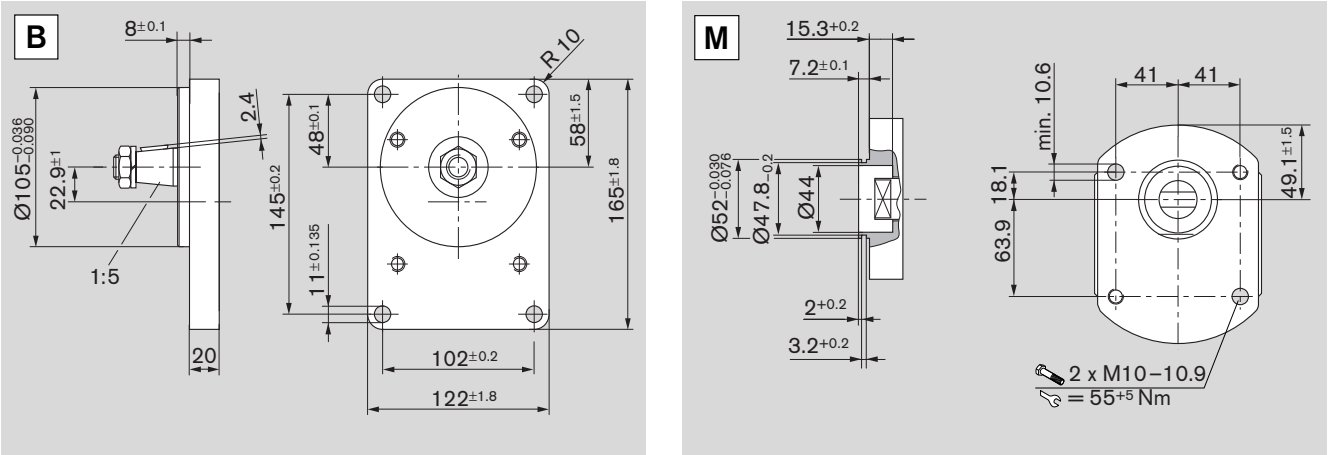

Port connections

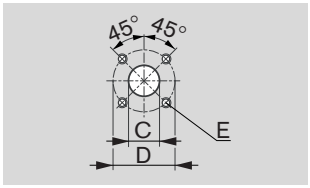

20 **Rectangular flange**

Synopsis of Type	Size	Inlet side C	D	E	Outlet side C	D	E
20	8.0 ... 22.5 cm³	15	35	M6 utilizable depth 13	20	40	M6 utilizable depth 13
	22.5 ... 45.0 cm³	18	55	M8 utilizable depth 13	26	55	M8 utilizable depth 13

Synopsis of Type	Size	Port connections (direction of rotation universal) C	D	E
20	8.0 ... 22.5 cm³	15	35	M6 utilizable depth 13
	22.5 ... 45.0 cm³	18	55	M8 utilizable depth 13

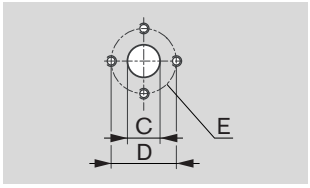

30 **Rectangular flange**

Synopsis of Type	Size	Inlet side C	D	E C	Outlet side D	E	
30	4 ... 8 cm³	13.5	30.2	M6 utilizable depth 13	13.5	30.2	M6 utilizable depth 13
	11 ... 28 cm³				20.0	39.7	M8 utilizable depth 13

External gear motors with integrated valves, sensors

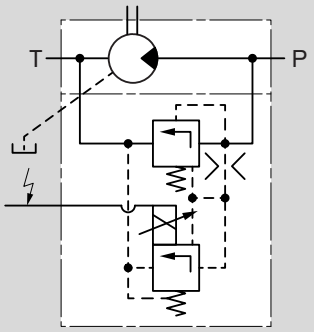

Pages 31, 32

Gear motor with integrated, pilot-operated proportional pressure relief valve and rotary shaft seal relieved of load thanks to the three-chamber design.
The use of gear motors without this relief of the rotary shaft seal is not recommended due to the loads from the oil return line, particularly when the oil is cold. The basis of this drive unit is a motor model “F”. The pilot proportional pressure relief valve is integrated in the rear end cover. This unit has the following advantages:

- No pipework necessary for the functioning of the prop. pressure relief valve
- Integrated pressure relief
- Fail-safe function in the event of power loss
- Drag speed virtually zero
- Motor speed prop. controllable
- Unaffected by pressure loads from the outlet

External gear motors with pressure relief valve

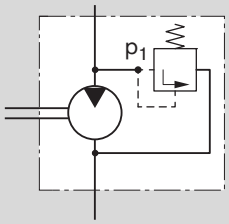

return port pressure < 3 bar (10 bar at starting)

Page 23

External gear motors with integrated speed sensor

Page 34

The DSM1-10 Hall-effect speed sensor was specially developed for tough use in mobile work machines. The sensor detects the speed signal of ferromagnetic gear wheels. In this process, as an active sensor, it supplies a signal with constant amplitude independent of the rotational speed.
Due to its compact, sturdy design, the gear motor with integrated sensor is suitable for the applications such as

- In fan drives for buses, trucks and construction machinery from 7 to 20 kW
- As a vibration drive for road rollers and road construction machinery

Design calculations for motors

The design calculations for motors are based on the following parameters:

V	[cm³/rev]	Displacement
Q	[l/min]	Inlet flow rate
p	[bar]	Pressure (p_1, p_A)
M	[Nm]	Output torque
n	[rev/min]	Output speed
P	[kW]	Output power

It is also necessary to allow for different efficiencies such as:

η_v	Volumetric efficiency
η_{hm}	Mechanical-hydraulic efficiency
η_t	Total efficiency

The following formulas describe the various relationships. They include correction factors for adapting the parameters to the usual units encountered in practice.
Note: Diagrams providing approximate selection data can be found on subsequent pages. These graphs contain the levels of efficiency in each case.

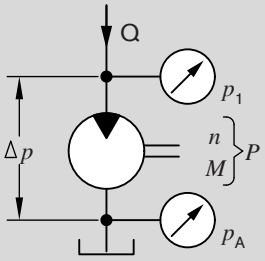

$$Q = \frac{V \cdot n}{\eta_v} \cdot 10^{-1} \qquad V = \frac{Q \cdot \eta_v}{n} \cdot 10 \qquad n = \frac{Q \cdot \eta_v}{V} \cdot 10$$

$$\Delta p = \frac{M}{1.59 \cdot V \cdot \eta_{hm}} \cdot 10^4 \qquad V = 1.59 \cdot \frac{M}{\Delta p \cdot \eta_{hm}} \cdot 10^4 \qquad M = 1.59 \cdot V \cdot \Delta p \cdot \eta_{hm} \cdot 10^{-4}$$

$$P = \frac{Q \cdot \Delta p \cdot \eta_t}{6} \cdot 10^{-4}$$

[%]

Q —— η_v ⟶ n
Δp —— η_{hm} ⟶ M
$\Delta p \cdot Q$ —— η_t ⟶ P

V [cm³/rev] Q [l/min] Δp [bar] **Note:** η [%]

n [rev/min] P [kW] M [Nm]

Diagrams Model “F”

$\upsilon = 35$ mm²/s, $T = 50$ °C

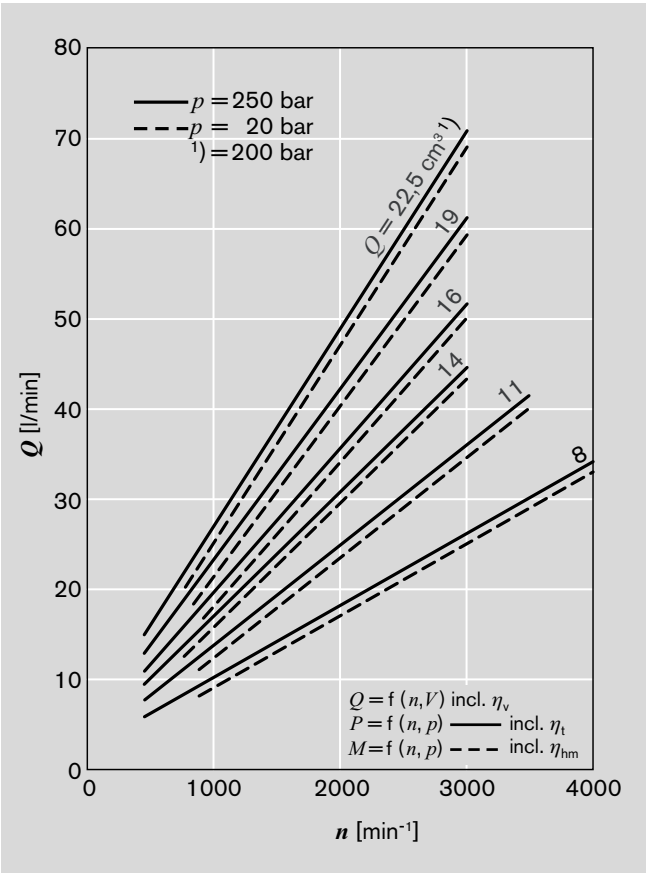

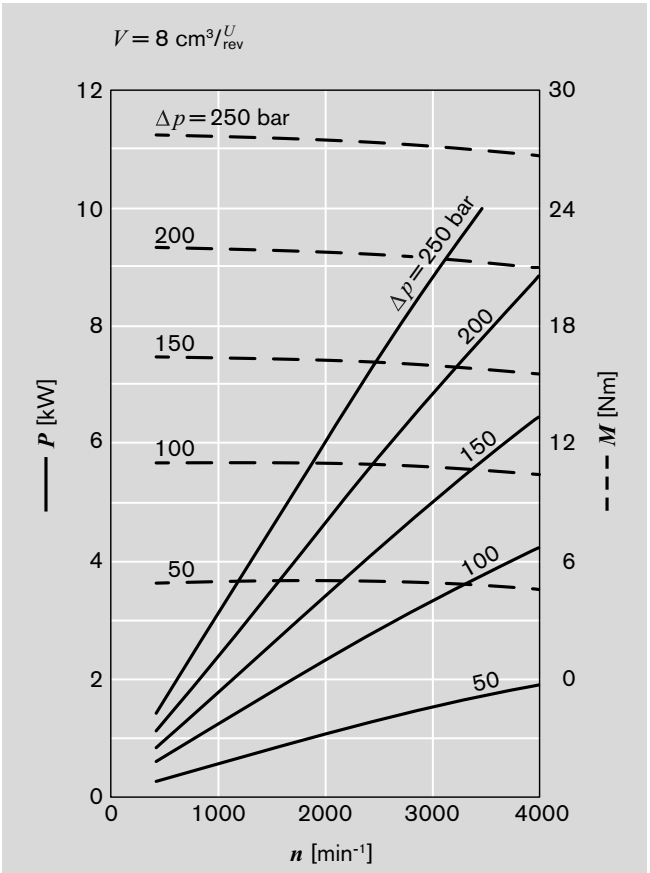

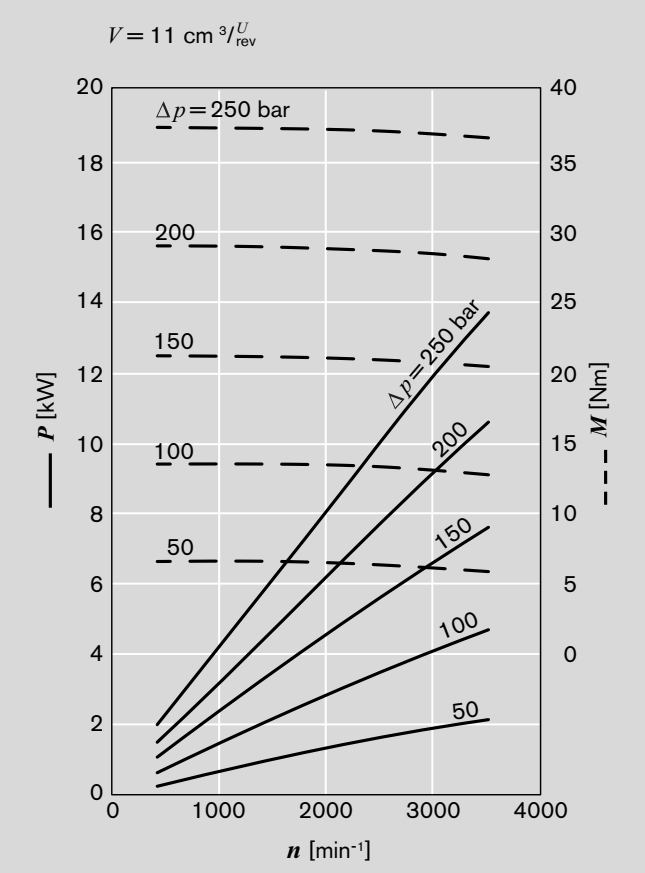
$V = 11\ \text{cm}^3/U_{rev}$
$\Delta p = 250$ bar
200
150
100
50
$\Delta p = 250$ bar
200
150
100
50
P [kW]
M [Nm]
n [min⁻¹]
0
2
4
6
8
10
12
14
16
18
20
0
5
10
15
20
25
30
35
40
0
1000
2000
3000
4000

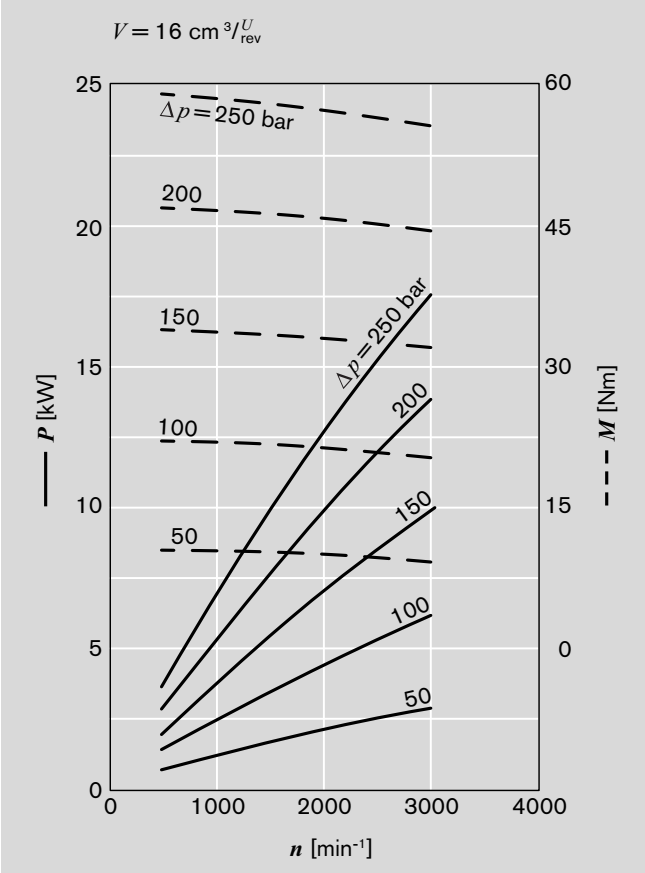
$V = 16\ \text{cm}^3/U_{rev}$
$\Delta p = 250$ bar
200
150
100
50
$\Delta p = 250$ bar
200
150
100
50
P [kW]
M [Nm]
n [min⁻¹]
0
5
10
15
20
25
0
15
30
45
60
0
1000
2000
3000
4000

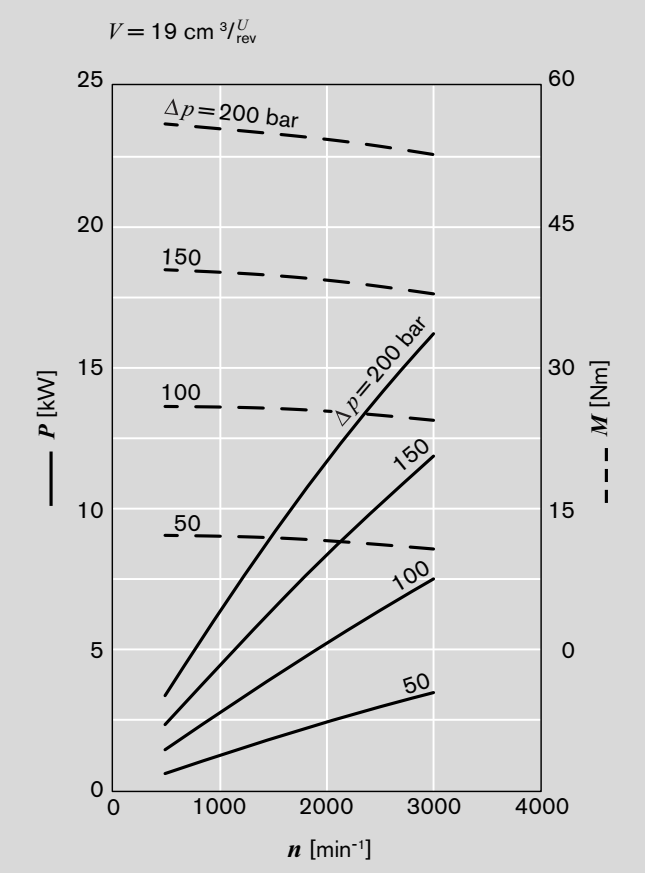
$V = 19\ \text{cm}^3/U_{rev}$
$\Delta p = 200$ bar
150
100
50
$\Delta p = 200$ bar
150
100
50
P [kW]
M [Nm]
n [min⁻¹]
0
5
10
15
20
25
0
15
30
45
60
0
1000
2000
3000
4000

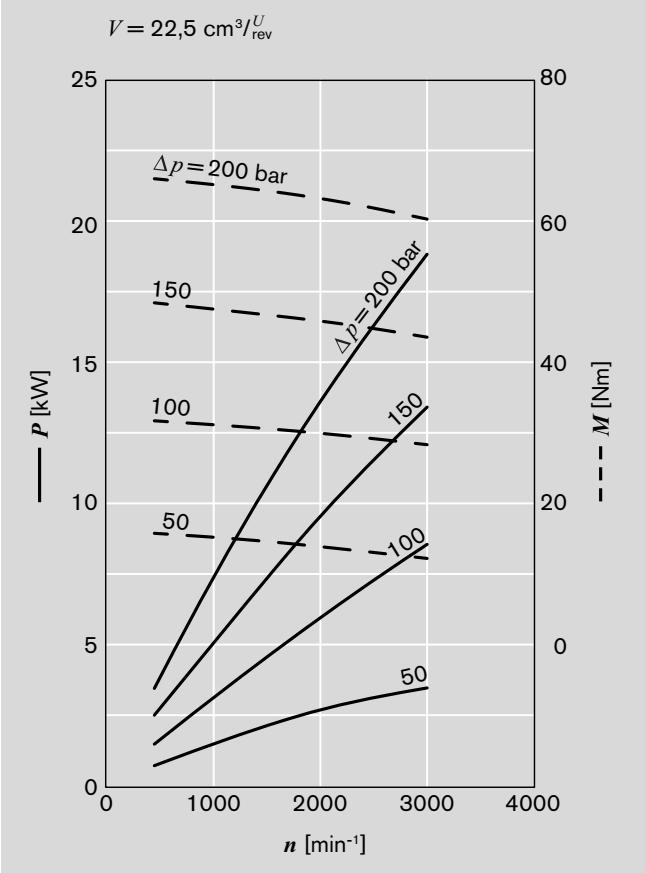
$V = 22{,}5\ \text{cm}^3/U_{rev}$
$\Delta p = 200$ bar
150
100
50
$\Delta p = 200$ bar
150
100
50
P [kW]
M [Nm]
n [min⁻¹]
0
5
10
15
20
25
0
20
40
60
80
0
1000
2000
3000
4000

Diagrams Model “N”

$v = 35$ mm²/s, $T = 50$ °C

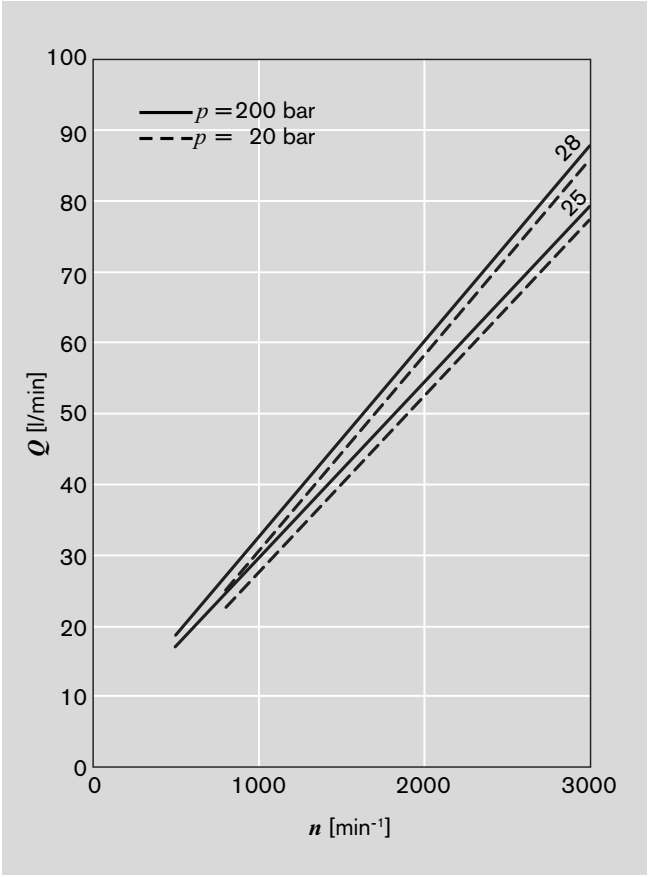

$Q = f(n,V)$ incl. η_v
$P = f(n, p)$ —— incl. η_t
$M = f(n, p)$ – – – incl. η_{hm}

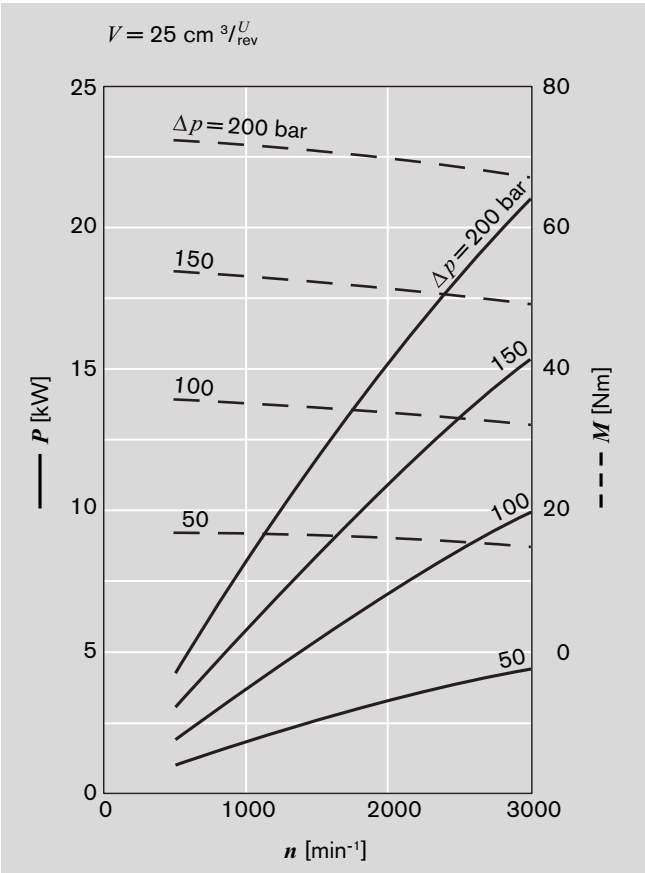

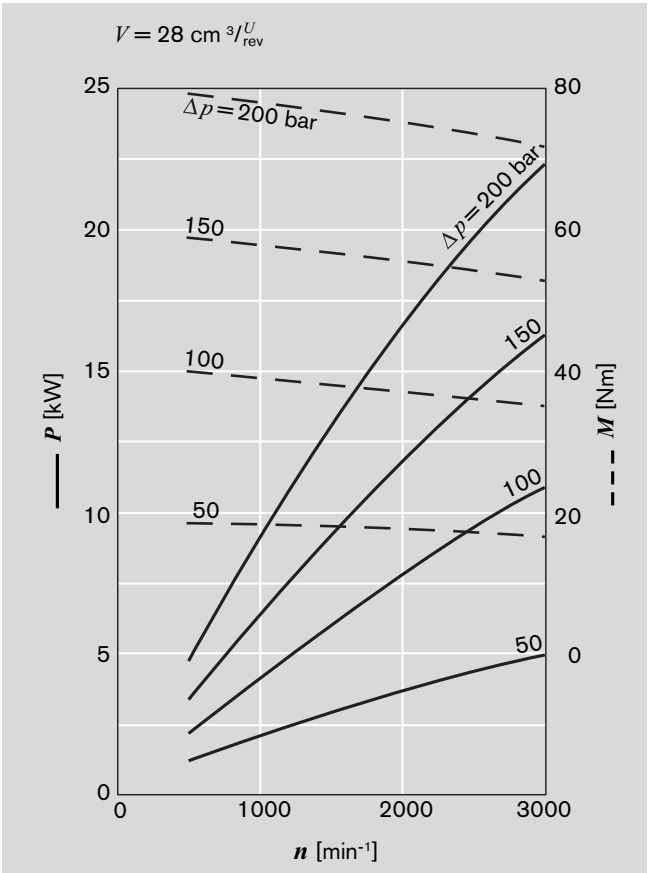

Diagrams Model “G”

$\upsilon = 35$ mm²/s, $T = 50$ °C

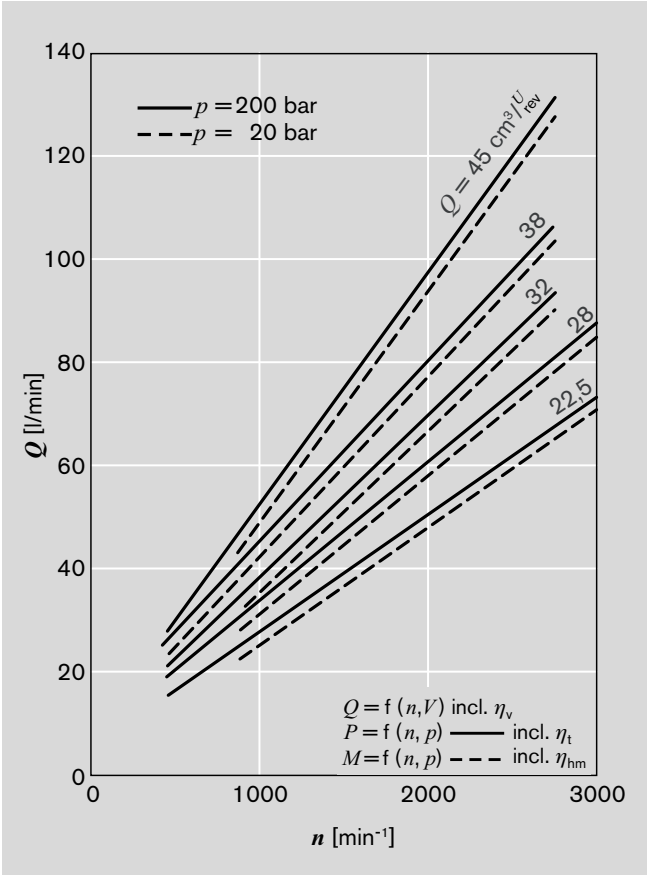

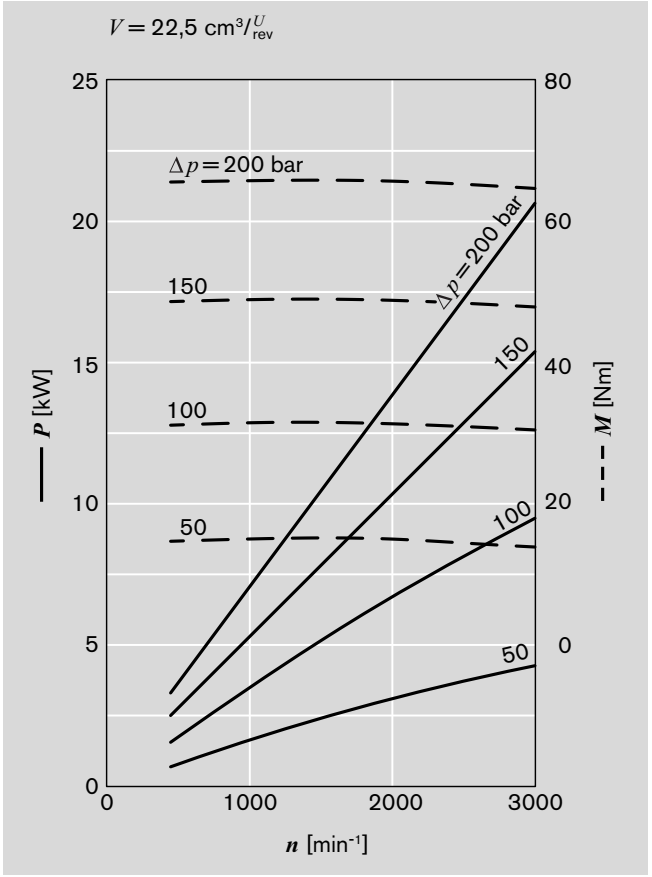

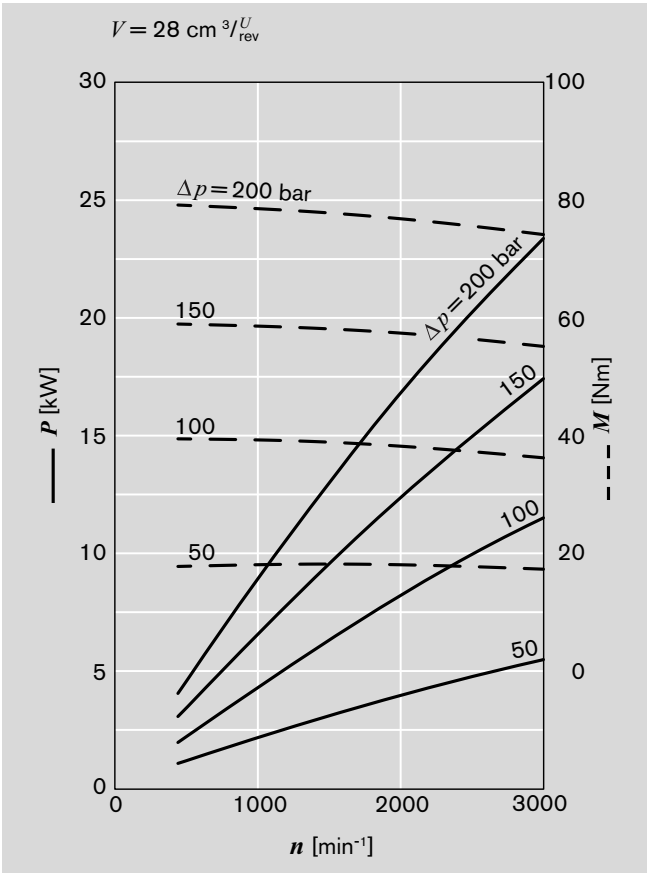

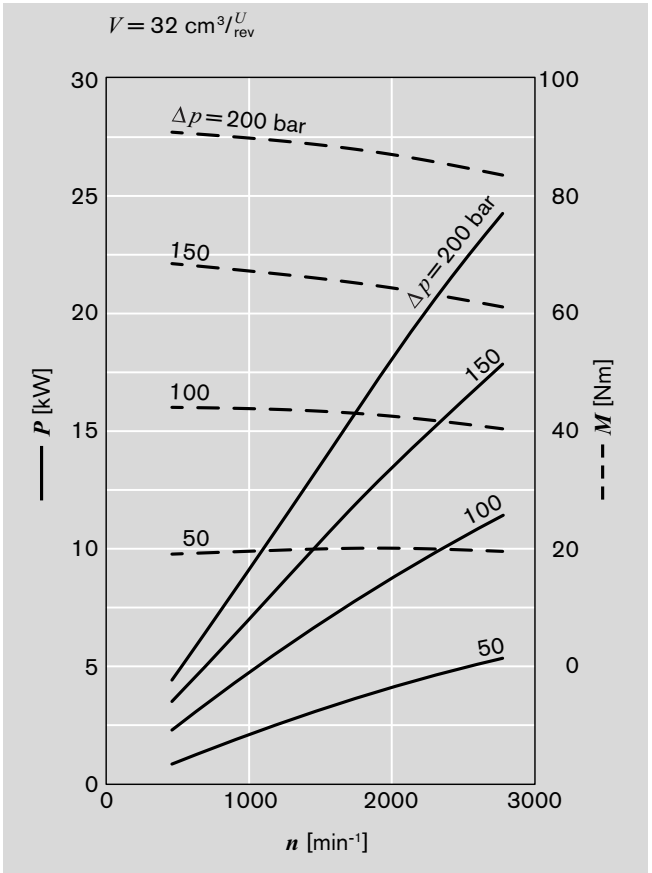

5

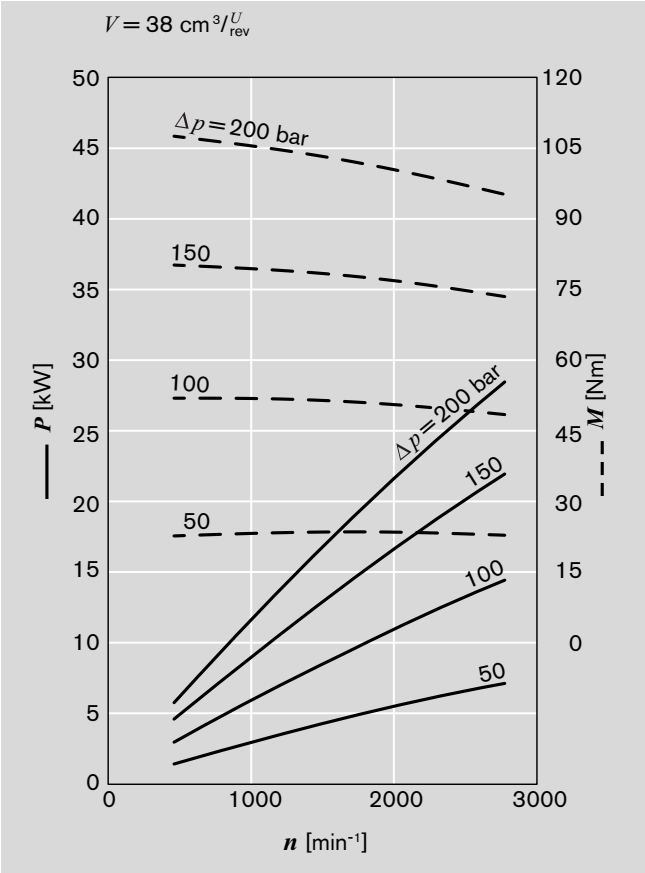

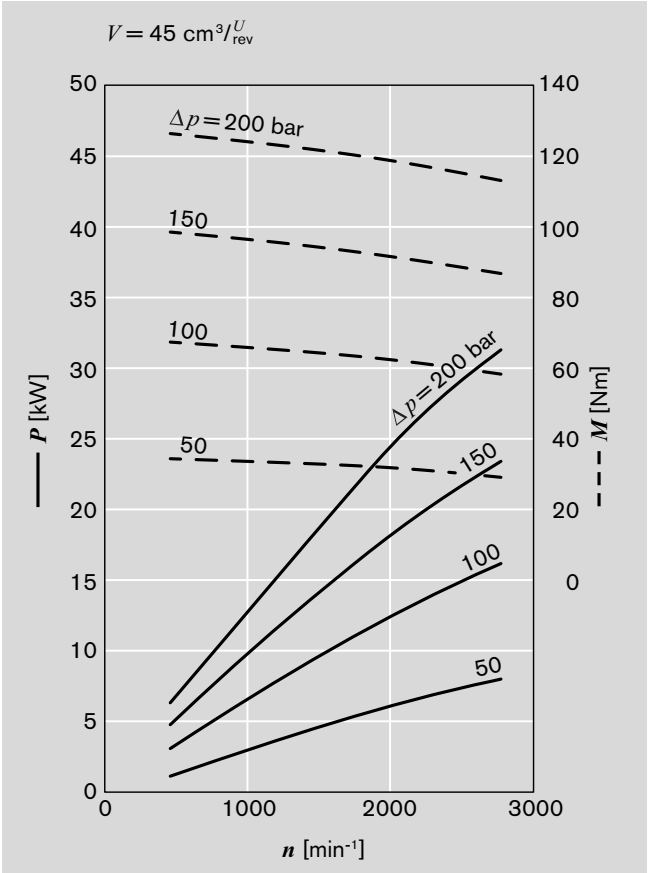

Specifications

General	
Construction	external gear motor
Mounting	Flange or through-bolting with spigot
Port connections	screw, flange
Direction of rotation (looking on shaft)	One direction of rotation or reversible
Mounting position	any
Load on shaft	radial and axial forces after consulting
Ambient temperature range	–30 °C...+80 °C with NBR seals*) –20 °C...+110 °C with FPM seals**)
Fluids	mineral oil-based hydraulic fluids to DIN/ISO, other fluids upon request
Viscosity	12…800 mm²/s permitted range 20…100 mm²/s recommended range …2,000 mm²/s permitted for starting
Fluid temperature range	max. +80 °C with NBR seals*) max. 110 °C with FPM seals**)
Filter ***)	contamination at least class 19/16 according to ISO 4406 to be obtained with filter b20 = 75. For higher lifespan demands we recommend a corre spondingly higher filter class.

*) NBR = Perbunan®
**) FPM = Viton®
***) During the application of control systems or devices with critical counter-reaction, such as steering and brake valves, the type of filtration selected must be adapted to the sensitivity of these devices/systems.

Safety requirements pertaining to the whole systems are to be observed.

In the case of applications with frequent load cycles please consult us.

Model F

Displacement	cm³/rev	**5.5** [1])	**8**	**11**	**14**	**16**	**19**	**22.5**
max. continuous pressure p_1	bar	250					180	
max. starting pressure p_2		280					210	
min. rotational speed	min^{-1}	500						
max. rotational speed p_1		4,000		3,500	3,000			
Motor outlet pressure p_A Leakage-oil line pressure p_L	bar	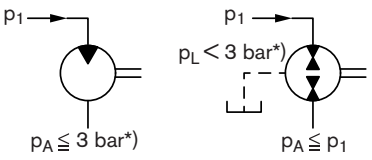						

Model N

Displacement	cm³/rev	**25**	**28**
max. continuous pressure p_1	bar	210	200
max. starting pressure p_2		240	230
min. rotational speed	min^{-1}	500	
max. rotational speed p_1		3,000	
Motor outlet pressure p_A Leakage-oil line pressure p_L	bar	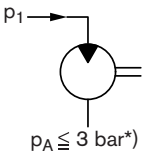	

Model G

Displacement	cm³/rev	**22.5**	**28**	**32**	**38**	**45**
max. continuous pressure p_1	bar	180				
max. starting pressure p_2		210				
min. rotational speed	min^{-1}	500				
max. rotational speed p_1		3,000		2,800	2,600	
Motor outlet pressure p_A Leakage-oil line pressure p_L	bar	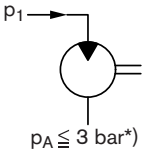				

[1]) On request *) Short-term when starting 10 bar

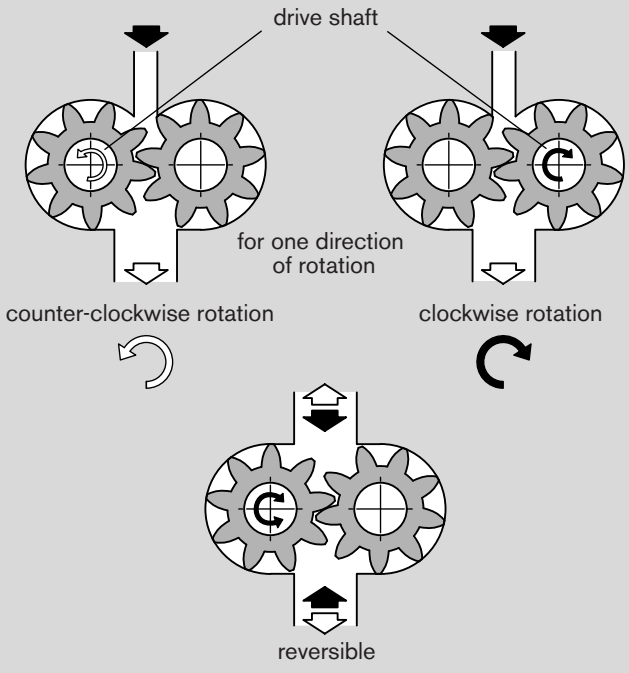

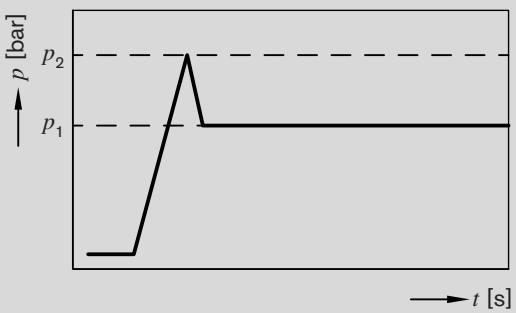

p_1 max. continuous pressure
p_2 starting pressure (depending on the application, this must be taken into consideration when setting the pressure of the hydraulic system's pressure-relief valve).

Power take-off

1. Flexible couplings
The coupling must not transfer any radial or axial forces to the motor.

The maximum radial run out of shaft spigot is 0.2 mm.

Refer to the fitting instructions provided by the coupling manufacturer for details of the maximum permitted shaft misalignment.

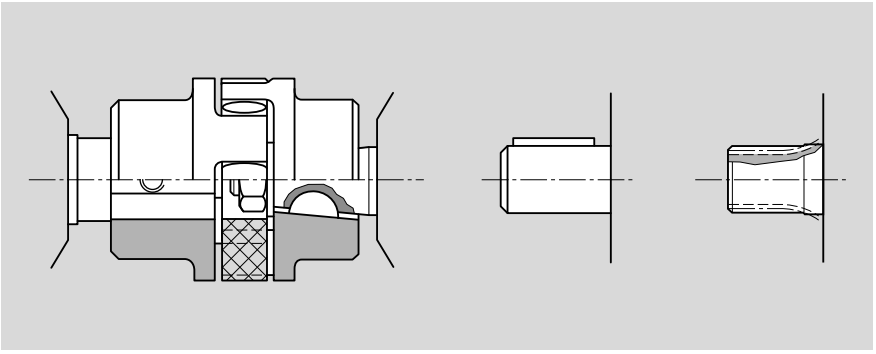

2. Sleeve couplings
Used on shafts with DIN or SAE splining.
Note: There must be no radial or axial forces exerted on the motor or sleeve coupling. The sleeve must be free to move axially. The distance between the motor shaft and drive shaft must be 2^{+1}. Oil-bath or oil-mist lubrication is necessary.

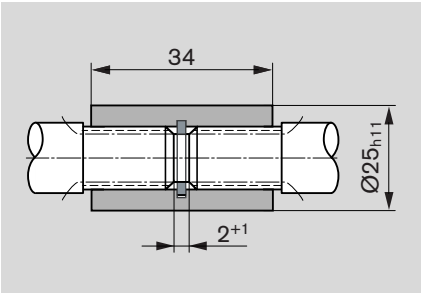

Spline shaft	$M_{max.}$ [Nm]	V [cm³/rev]	$p_{max.}$ [bar]
DIN	190	8...22.5	$p_{max.}$
SAE	130		

3. Drive shaft with tang
For the close-coupling of the motors to gearboxes, etc. the motors shaft has a special drive shaft with tang which combines with a center coupling ③. There is no shaft seal.

The recommended arrangements and dimensions for the drive end and sealing are as follows.

Model "F"

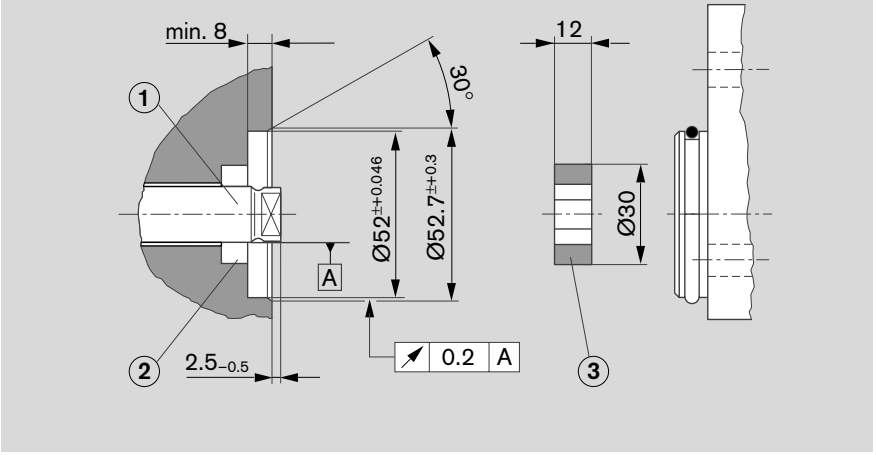

① Drive shaft
Case-hardened steel DIN 17 210, e.g. 20 MnCrS 5
case-hardened 0.6 deep; HRc 60 ±3.
Surface for sealing ring ground without rifling $R_{max.} \leq 4\mu m$

② Radial shaft seal
Rubber-covered seal (see DIN 3760, Type AS or double-lipped ring).
Cut 15° chamfer or fit shaft seal with protective sleeve.

$M_{max.}$ [Nm]	V [cm³/rev]	$p_{max.}$ [bar]
65	8...14	280
	16	230
	19	190
	22.5	160

4. Outboard bearing Model “F”

Outboard bearings eliminate possible problems when the motors are driven by V-belts or gearwheels. The diagrams below show the maximum overhung and thrust loads that can be tolerated, referring to a bearing life of L_H = 1,000 hours.

$M_{max.}$ [Nm]	V [cm³/rev]	$p_{max.}$ [bar]
65	16	230
	19	190
	22.5	160

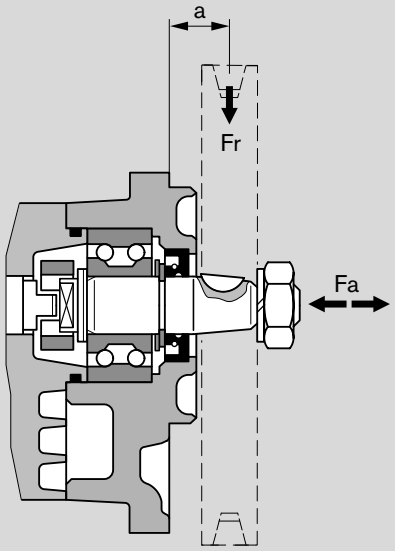

Fr is reduced by 0.7 Fa when axial loading Fa is applied.

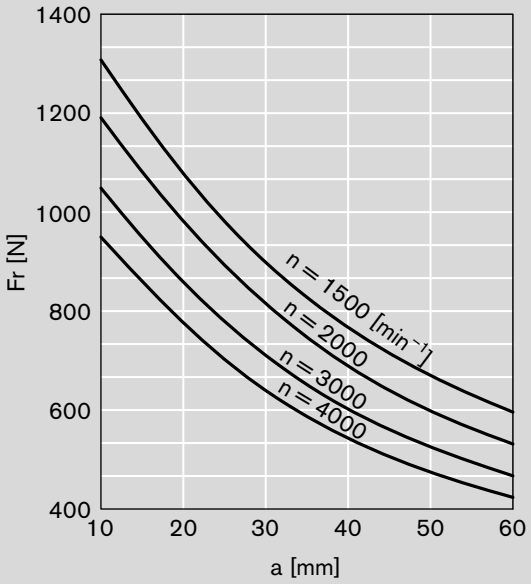

Connectors

Gear motor flange, 3-bolt, 90° angle, for square flange 30 **see page 8**

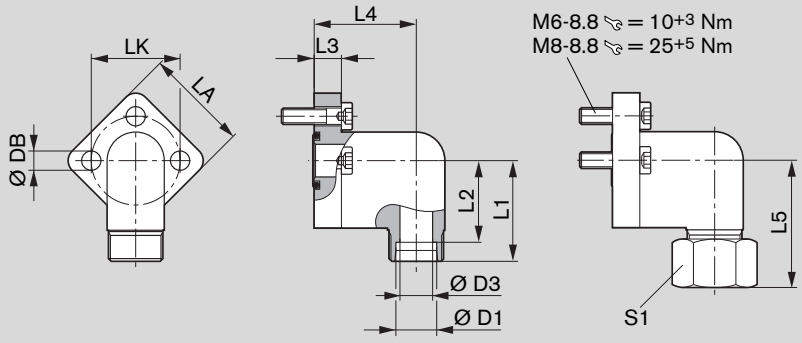

LK	D1	D3	L1	L2	L3	L4	L5	LA	S1	DB	Screws 3 pieces	O-ring NBR *)	Weight [kg]	Ordering-No.	p [bar]
30	12L	10	37	30.0	10	37.5	46	38	22	6.4	M6x22	16x2.5	0.13	**1 515 702 146**	250
30	15L	12	37	30.0	10	37.5	47	38	27	6.4	M6x22	16x2.5	0.14	**1 515 702 147**	250
30	18L	15	37	30.0	10	37.5	47	38	32	6.4	M6x22	16x2.5	0.17	**1 515 702 148**	160
40	22L	19	43	35.5	14	41.0	53	48	36	8.4	M8x30	24x2.5	0.29	**1 515 702 149**	160
40	28L	24	43	35.5	14	41.0	53	48	41	8.4	M8x30	24x2.5	0.40	**1 515 702 150**	160

Complete screw connection with O-ring, metric screw set, nut/mother and sleeve fitting *) NBR = Perbunan®

Connectors (continuation)

Gear motor flange, straight, for square flange 20 see page 8

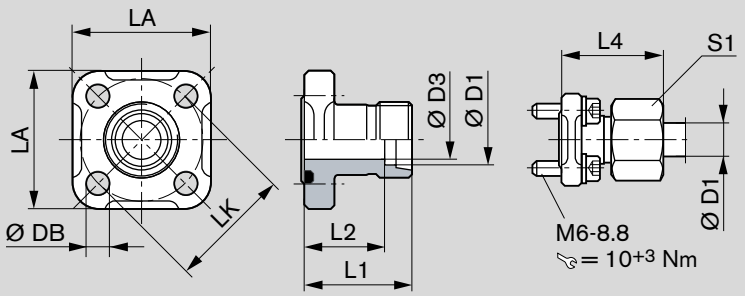

LK	D1	D3	L1	L2	L4	LA	S1	DB	Screws 4 pieces	O-ring NBR *)	Weight [kg]	Ordering-No.	*p* [bar]
35	10L	8	30	23.0	39.0	40	19	6.4	M6x22	20x2.5	0.09	**1 515 702 064**	315
35	12L	10	30	23.0	39.0	40	22	6.4	M6x22	20x2.5	0.10	**1 515 702 065**	315
35	15L	12	30	23.0	38.0	40	27	6.4	M6x22	20x2.5	0.10	**1 515 702 066**	250
40	15L	12	35	28.0	43.0	42	27	6.4	M6x22	24x2.5	0.12	**1 515 702 067**	100
40	18L	15	35	27.5	44.0	42	32	6.4	M6x22	24x2.5	0.13	**1 515 702 068**	100
40	22L	19	35	27.5	44.5	42	36	6.4	M6x22	24x2.5	0.12	**1 515 702 069**	100
40	28L	24	42	27.5	34.5	42	41	6.4	M6x22	24x2.5	0.15	**1 515 702 008**	100

Complete screw connection with O-ring, metric screw set, nut/mother and sleeve fitting *) NBR = Perbunan®

Gear motor flange, 90° angle, for square flange 20 see page 8

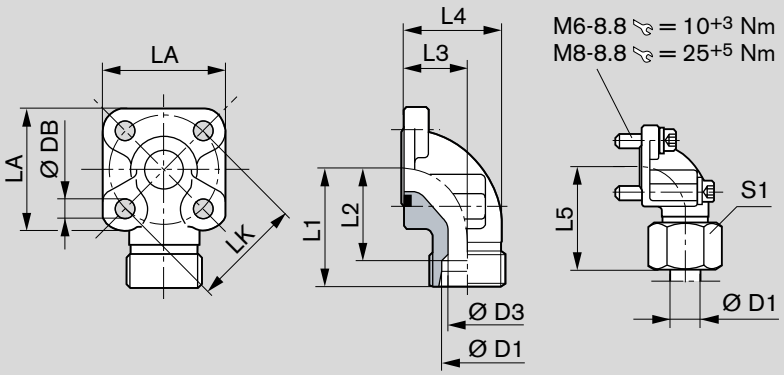

LK	D1	D3	L1	L2	L3	L4	L5	LA	S1	DB	Screws 2 pcs.	2 pcs.	O-ring NBR *)	Weight [kg]	Ordering-No.	*p* [bar]
35	10L	8	38	31.0	16.5	26.5	47.0	40	19	6.4	M6 x 22	M6 x 35	20 x 2.5	0.16	**1 515 702 070**	315
35	12L	10	38	31.0	16.5	26.5	47.0	40	22	6.4	M6 x 22	M6 x 35	20 x 2.5	0.16	**1 515 702 071**	315
35	15L	12	38	31.0	16.5	26.5	46.0	40	27	6.4	M6 x 22	M6 x 35	20 x 2.5	0.15	**1 515 702 072**	250
35	16S	12	38	29.5	20.0	31.0	48.0	40	30	6.4	M6 x 22	M6 x 40	20 x 2.5	0.18	**1 515 702 002**	315
35	18L	15	38	29.5	20.0	31.0	47.0	40	32	6.4	M6 x 22	M6 x 40	20 x 2.5	0.18	**1 545 702 006**	250
35	20S	16	45	34.5	25.0	38.0	56.0	40	36	6.4	M6 x 22	M6 x 45	20 x 2.5	0.24	**1 515 702 017**	315
40	15L	12	38	31.0	22.5	36.5	46.0	42	27	6.4	M6 x 22	M6 x 22	24 x 2.5	0.15	**1 515 702 076**	100
40	18L	15	38	30.5	22.5	36.5	47.0	42	32	6.4	M6 x 22	M6 x 22	24 x 2.5	0.17	**1 515 702 074**	100
40	20S	16	40	29.5	22.5	35.5	50.0	42	36	6.4	M6 x 22	M6 x 45	24 x 2.5	0.20	**1 515 702 011**	250
40	22L	19	38	30.5	22.5	36.5	47.5	42	36	6.4	M6 x 22	M6 x 22	24 x 2.5	0.17	**1 515 702 075**	100
40	28L	22	40	32.5	28.0	43.0	49.0	42	41	6.4	M6 x 20	M6 x 50	24 x 2.5	0.24	**1 515 702 010**	100
40	35L	31	41	30.5	34.0	55.0	52.0	42	50	6.4	M6 x 22	M6 x 60	24 x 2.5	0.33	**1 515 702 018**	100
55	20S	17	45	34.5	24.0	40.0	56.0	58	36	8.4	M8 x 25	M8 x 50	33 x 2.5	0.44	**1 515 702 004**	250
55	30S	26	49	35.5	32.0	50.0	62.0	58	50	8.4	M8 x 25	M8 x 50	33 x 2.5	0.50	**1 515 702 006**	250
55	35L	31	49	38.5	32.0	51.5	62.0	58	50	8.4	M8 x 25	M8 x 60	33 x 2.5	0.47	**1 515 702 005**	100
55	42L	38	49	38.0	40.0	64.5	61.0	58	60	8.4	M8 x 25	M8 x 70	33 x 2.5	0.60	**1 515 702 019**	100

Complete screw connection with O-ring. metric screw set. nut/mother and sleeve fitting *) NBR = Perbunan®

Dimensions in mm

F-Motor

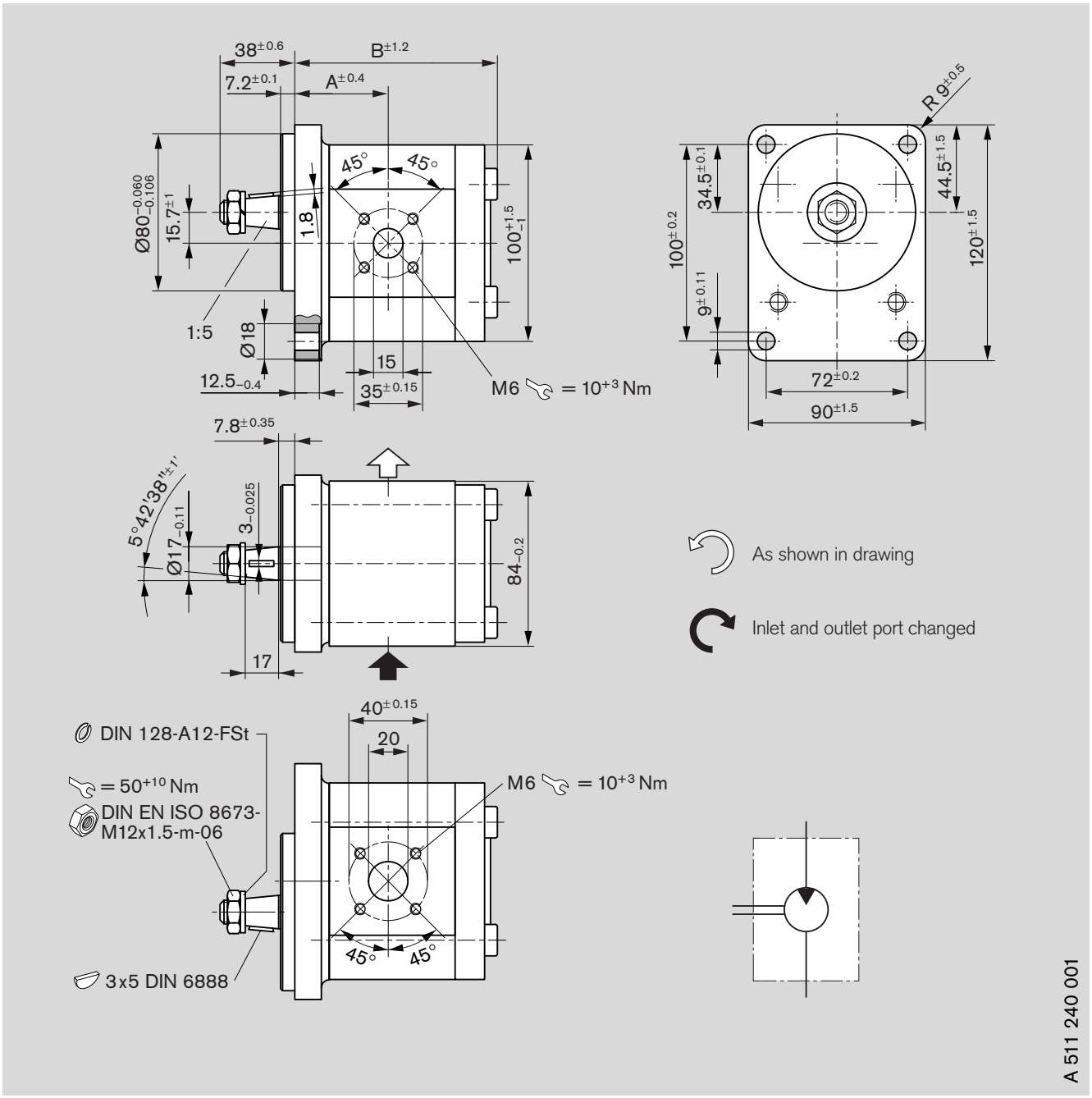

Ordering code

AZMF – 1x – ☐ ☐ ☐ ☐ **C B 20 M B**
AZMF – 10 – ☐ ☐ ☐ ☐ **C B 20 K B***
AZMF – 10 – ☐ ☐ ☐ ☐ **C B 20 M B – S0012 ****

Displacement [cm³/rev]	Ordering-No. L	Ordering-No. R	Max. operating pressure [bar]	Min. rotation speed [min⁻¹]	Max. rotation speed [min⁻¹]	kg	Dimension [mm] A	Dimension [mm] B
8	**0 511 425 300**	**0 511 425 001**	210	500	4,000	2.9	43.2	91.1
11	**0 511 525 300**	**0 511 525 001**	210	500	3,500	3.0	47.0	96.3
14	**0 511 525 304**	**–**	210	500	3,000	3.2	47.5	101.3
16	**–**	**0 511 625 005**	210	500	3,000	3.4	47.5	104.7
19	**0 511 625 308**	**0 511 625 003**	180	500	3,000	3.6	47.5	109.7
19	**–**	**0 511 625 009 ***	180	500	3,000	3.6	47.5	109.7
22.5	**0 511 725 304 ****	**0 511 725 005 ****	210	500	3,000	3.9	61.1	125.3

Dimensions in mm

F-Motor

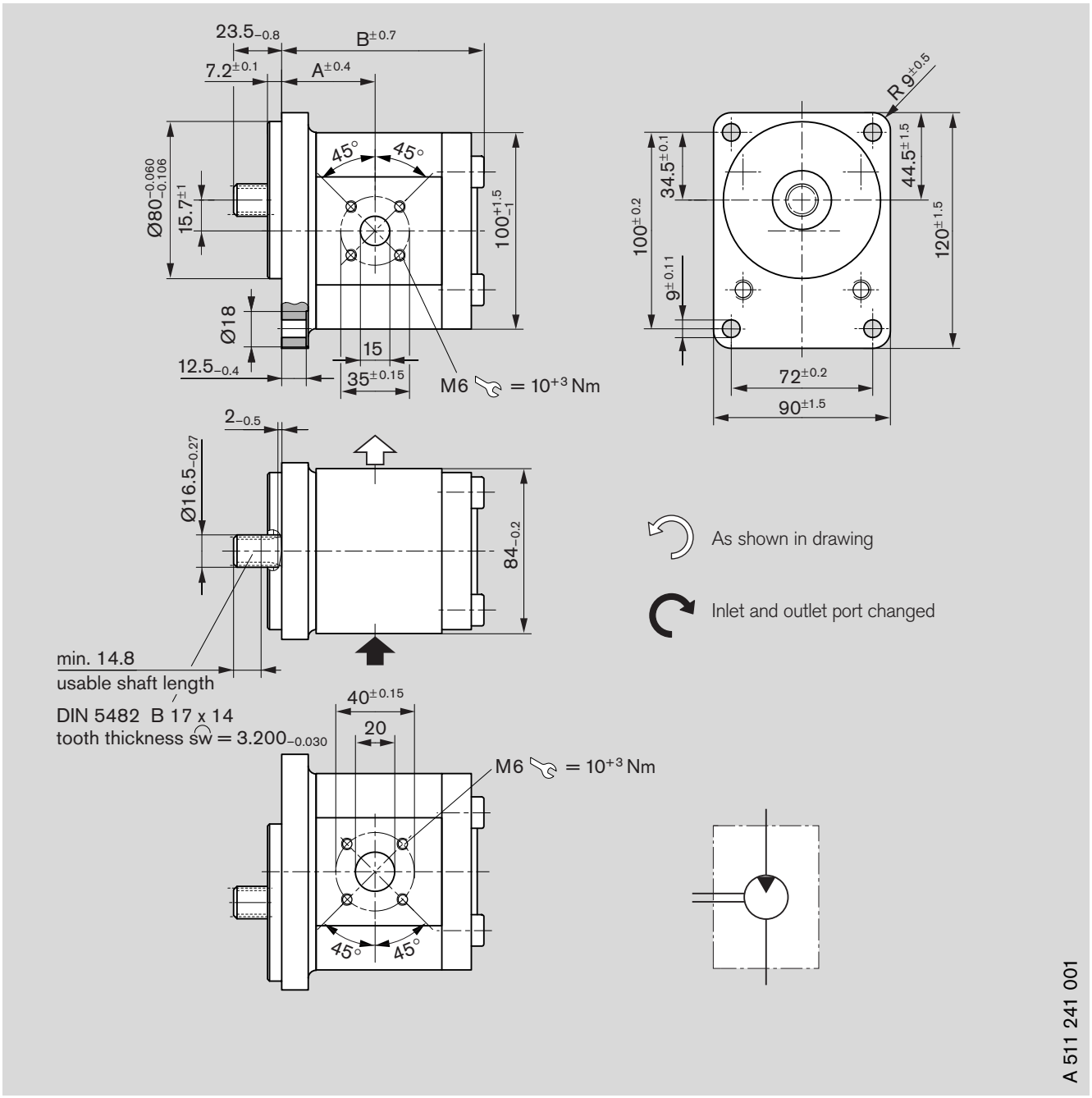

Ordering code
AZMF – 10 – ☐ ☐ ☐ ☐ F B 20 M B

Displacement [cm³/rev]	Ordering-No. L	Ordering-No. R	Max. operating pressure [bar]	Min. rotation speed [min⁻¹]	Max. rotation speed [min⁻¹]	kg	Dimension [mm] A	Dimension [mm] B
8	**0 511 425 301**	**0 511 425 002**	210	500	4,000	2.9	43.2	91.0
11	**0 511 525 301**	**0 511 525 002**	210	500	3,500	3.0	47.0	96.0
14	**0 511 525 303**	**–**	210	500	3,000	3.2	47.5	101.0
16	**0 511 625 301**	**0 511 625 001**	210	500	3,000	3.4	47.5	104.4
19	**0 511 625 300**	**0 511 625 002**	180	500	3,000	3.6	47.5	109.4
22.5	**0 511 725 303**	**0 511 725 004**	180	500	3,000	3.8	61.1	126.8

Dimensions in mm

F-Motor

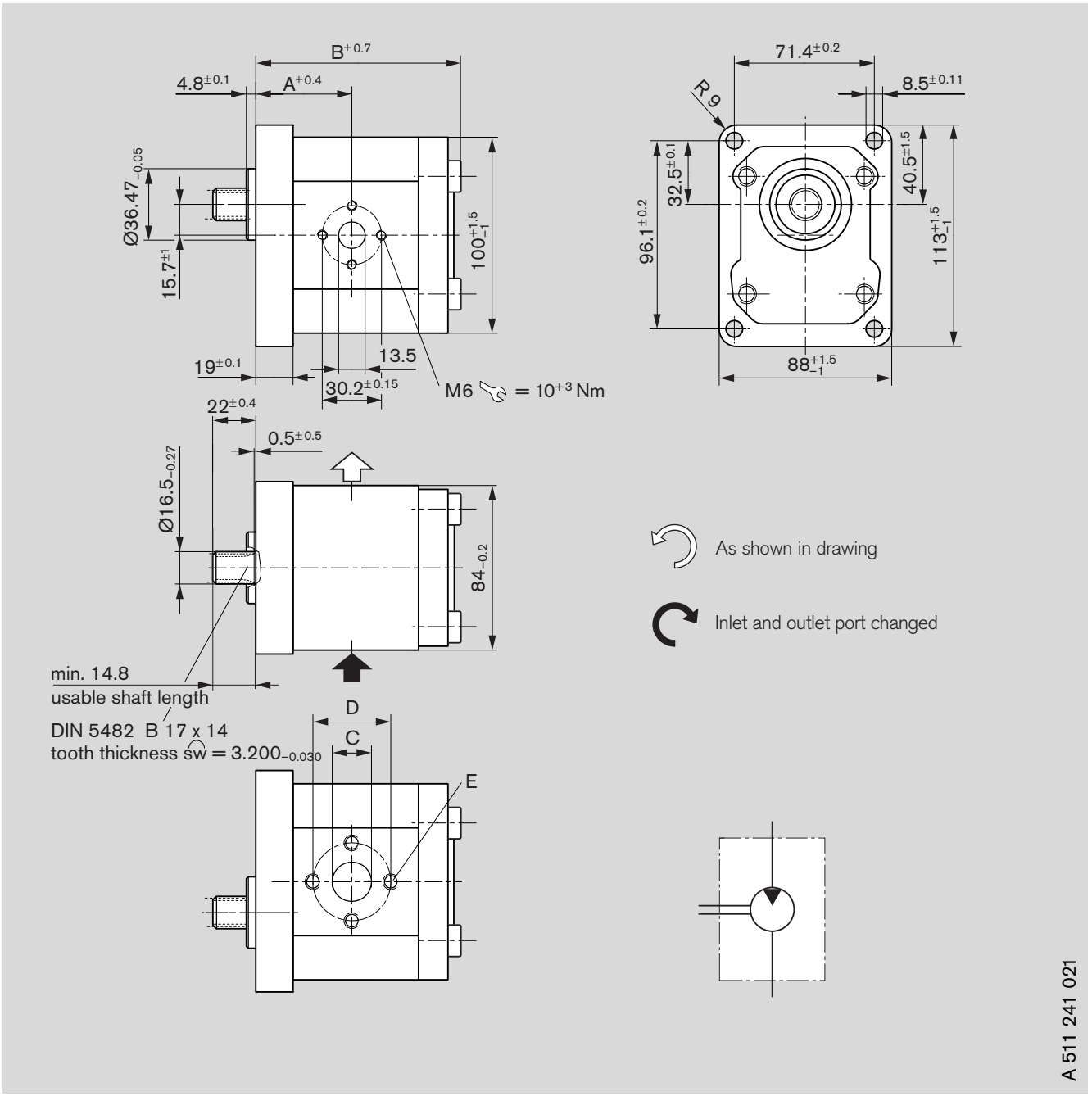

Ordering code

AZMF – 10 – ☐ ☐ ☐ ☐ F O 30 M B

Displacement [cm³/rev]	Ordering-No. L	Ordering-No. R	Max. operating pressure [bar]	Min. rotation speed [min⁻¹]	Max. rotation speed [min⁻¹]	kg	Dimension [mm] A	B	C	D	E
8	–	**0 511 425 003**	210	500	4,000	2.9	44.9	90.7	13.5	30.2	M6 = 10+3
19	**0 511 625 303**	–	180	500	3,000	3.7	49.0	109.1	20.0	39.7	M8 = 25+5
22.5	–	**0 511 725 305**	180	500	3,000	3.9	56.6	114.5	20.0	39.7	M8 = 25+5

Dimensions in mm

F-Motor

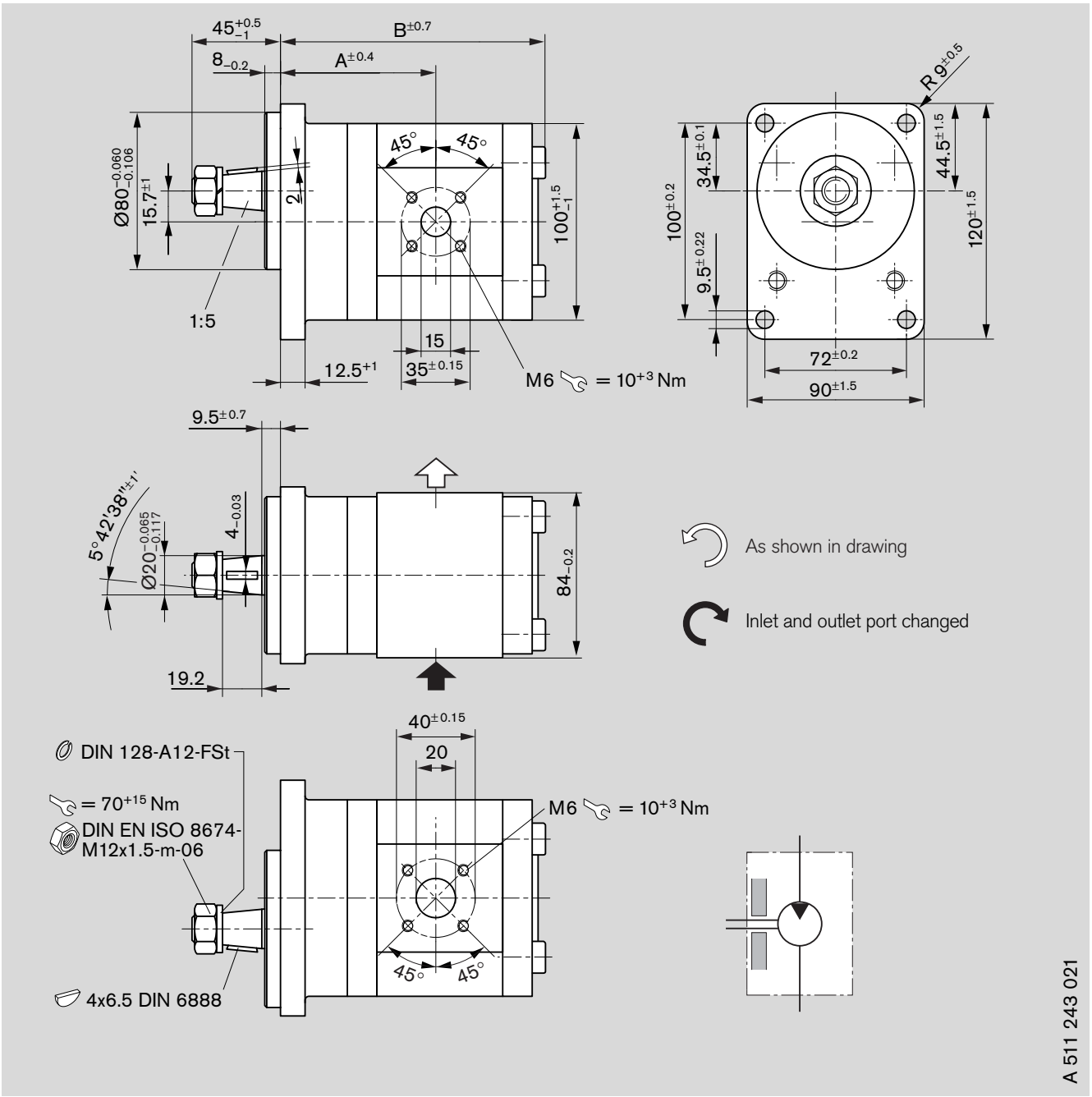

Ordering code

AZMF – 10 – ☐ ☐ ☐ ☐ S A 20 M B

AZMF – 10 – ☐ ☐ ☐ ☐ S A 20 M B – S0012

Displacement [cm³/rev]	Ordering-No. L	Ordering-No. R	Max. operating pressure [bar]	Min. rotation speed [min⁻¹]	Max. rotation speed [min⁻¹]	kg	Dimension [mm] A	Dimension [mm] B
8	**0 511 445 300**	**0 511 445 001**	250	500	4,000	3.5	74.7	120.6
11	**0 511 545 300**	**0 511 545 001**	250	500	3,500	3.6	78.5	125.6
14	**0 511 545 301**	–	250	500	3,000	3.7	79.0	130.6
16	**0 511 645 300**	**0 511 645 001**	250	500	3,000	3.8	79.0	134.0
16	–	**0 511 645 003**	230	500	3,000	3.8	93.0	134.0
19	**0 511 645 302**	–	190	500	3,000	4.2	79.0	139.0
22.5	**0 511 745 300***	**0 511 745 001***	160	500	2,500	4.8	92.6	156.4

Dimensions in mm

F-Motor

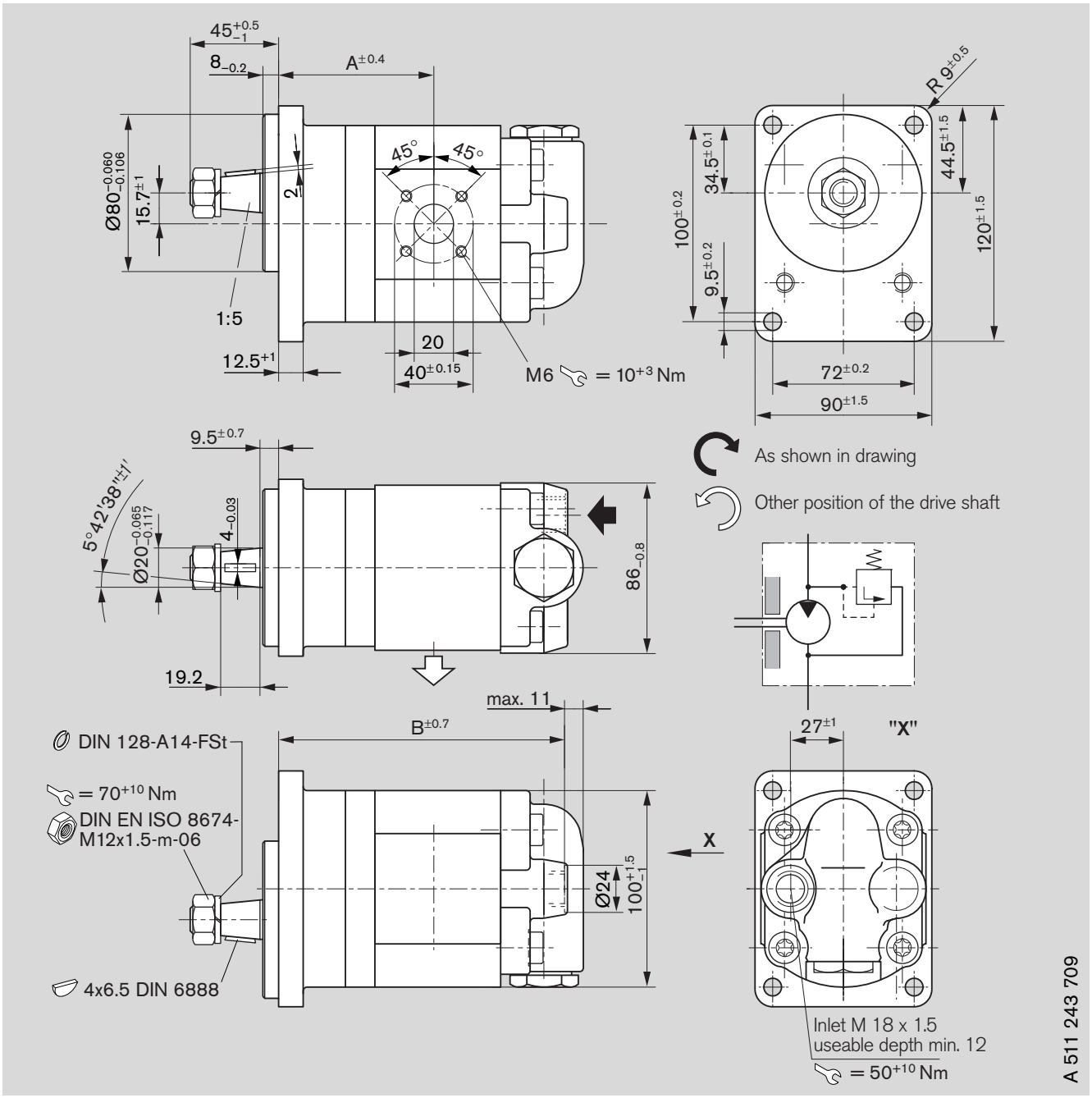

Ordering code

AZMF – 10 – ☐ ☐ ☐ ☐ S A 20 M D XXXXX – S0076

Displacement [cm³/rev]	Ordering-No. L	Ordering-No. R	Max. operating pressure [bar]	Min. rotation speed [min⁻¹]	Max. rotation speed [min⁻¹]	kg	Dimension [mm] A	Dimension [mm] B
8	**0 511 445 301**	**0 511 445 003**	200	500	4,000	3.6	74.7	133.1
11	**0 511 545 302**	0 511 545 003	150	500	3,500	3.8	79.1	138.1

Dimensions in mm

F-Motor

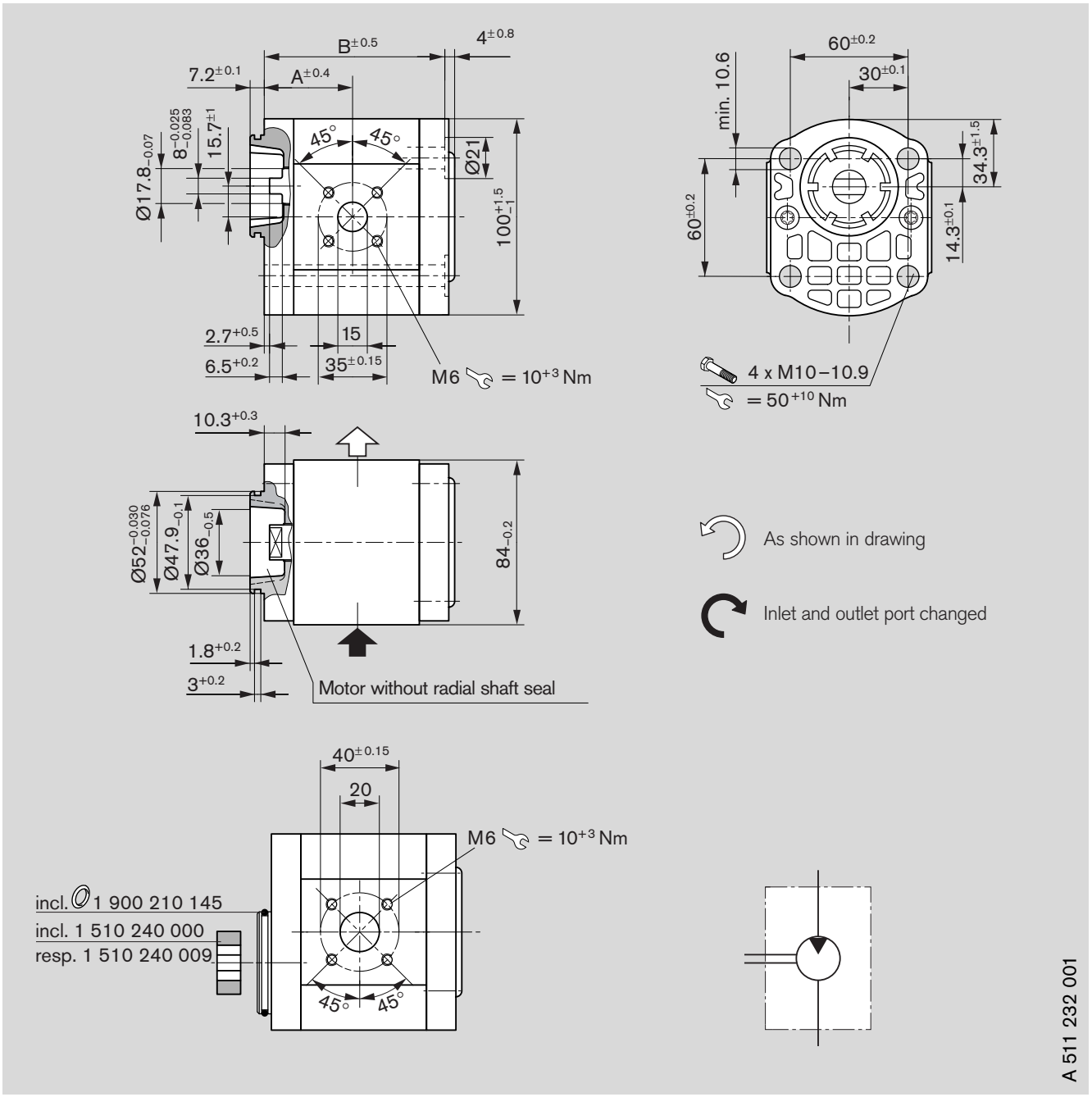

Ordering code

AZMF – 10 – ☐ ☐ ☐ ☐ N T 20 M B

Displacement [cm³/rev]	Ordering-No. L	Ordering-No. R	Max. operating pressure [bar]	Min. rotation speed [min⁻¹]	Max. rotation speed [min⁻¹]	kg	Dimension [mm] A	Dimension [mm] B
8	**0 511 415 300**	**0 511 415 001**	250	500	4,000	2.5	40.7	80.3
11	**0 511 515 300**	**0 511 515 001**	250	500	3,500	2.6	44.5	85.3
16	**0 511 615 301**	**0 511 615 002**	230	500	3,000	3.0	45.0	93.7
19	**0 511 615 300**	**0 511 615 001**	190	500	3,000	3.2	45.0	98.7
22.5	**0 511 715 300**	**0 511 715 001**	160	500	3,000	3.4	52.6	104.1

Dimensions in mm

F-Motor

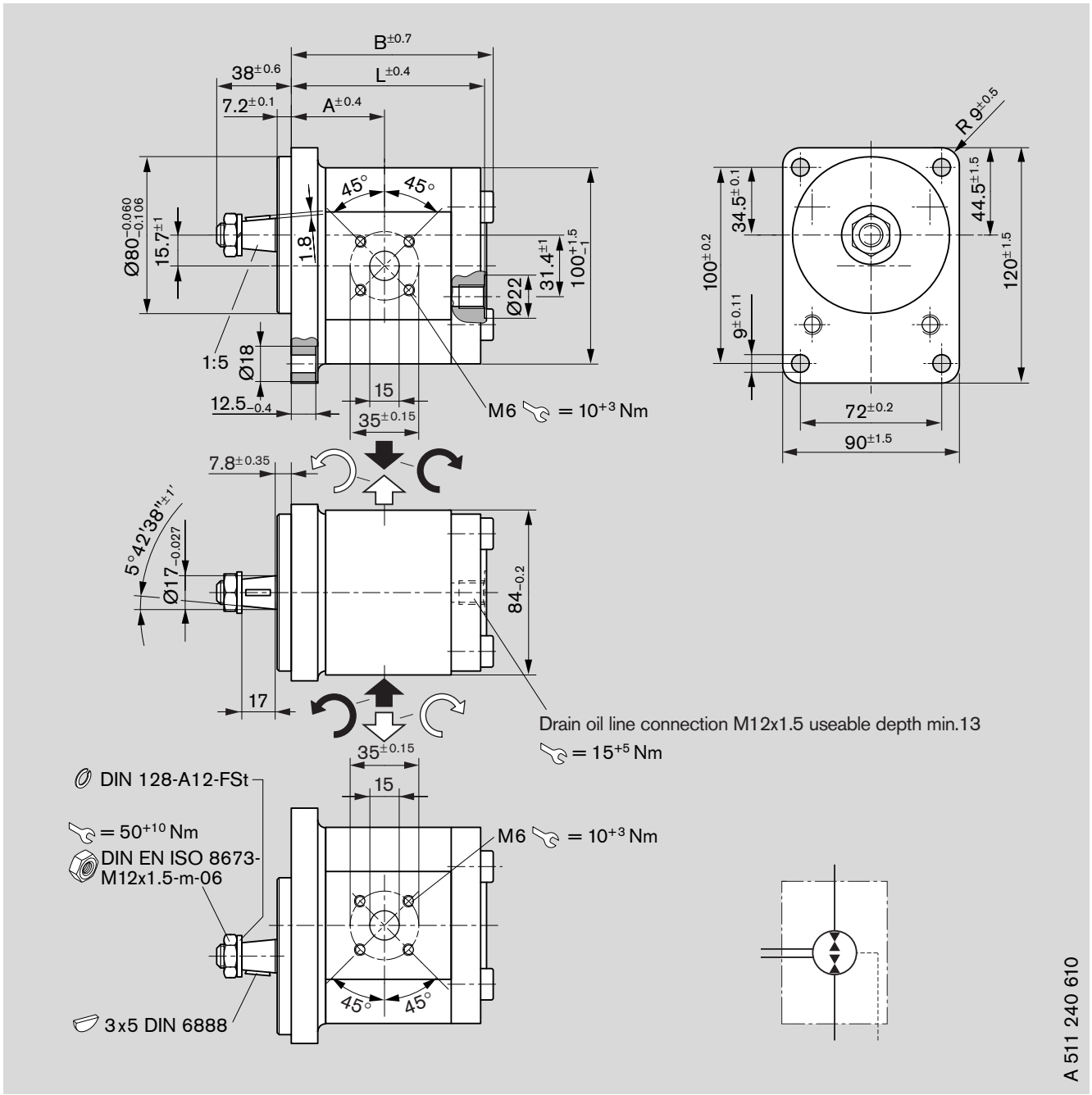

Ordering code

AZMF – 10 – ☐ ☐ ☐ U C B 20 M L

AZMF – 10 – ☐ ☐ ☐ U C B 20 K L*

Displace-ment [cm³/rev]	Ordering-No. Universal	Max. operating-pressure [bar]	Min. rotation speed [min⁻¹]	Max. rotation speed [min⁻¹]	kg	Dimension [mm] A	B	L
8	**0 511 425 601**	210	500	4,000	3.4	43.2	90.7	85.8
11	**0 511 525 604**	210	500	3,500	4.2	47.0	95.9	90.8
16	**0 511 625 602**	210	500	3,000	3.9	47.5	104.3	99.2
22.5	**0 511 725 601** *	180	500	3,000	3.9	55.1	114.6	109.6

Dimensions in mm

F-Motor

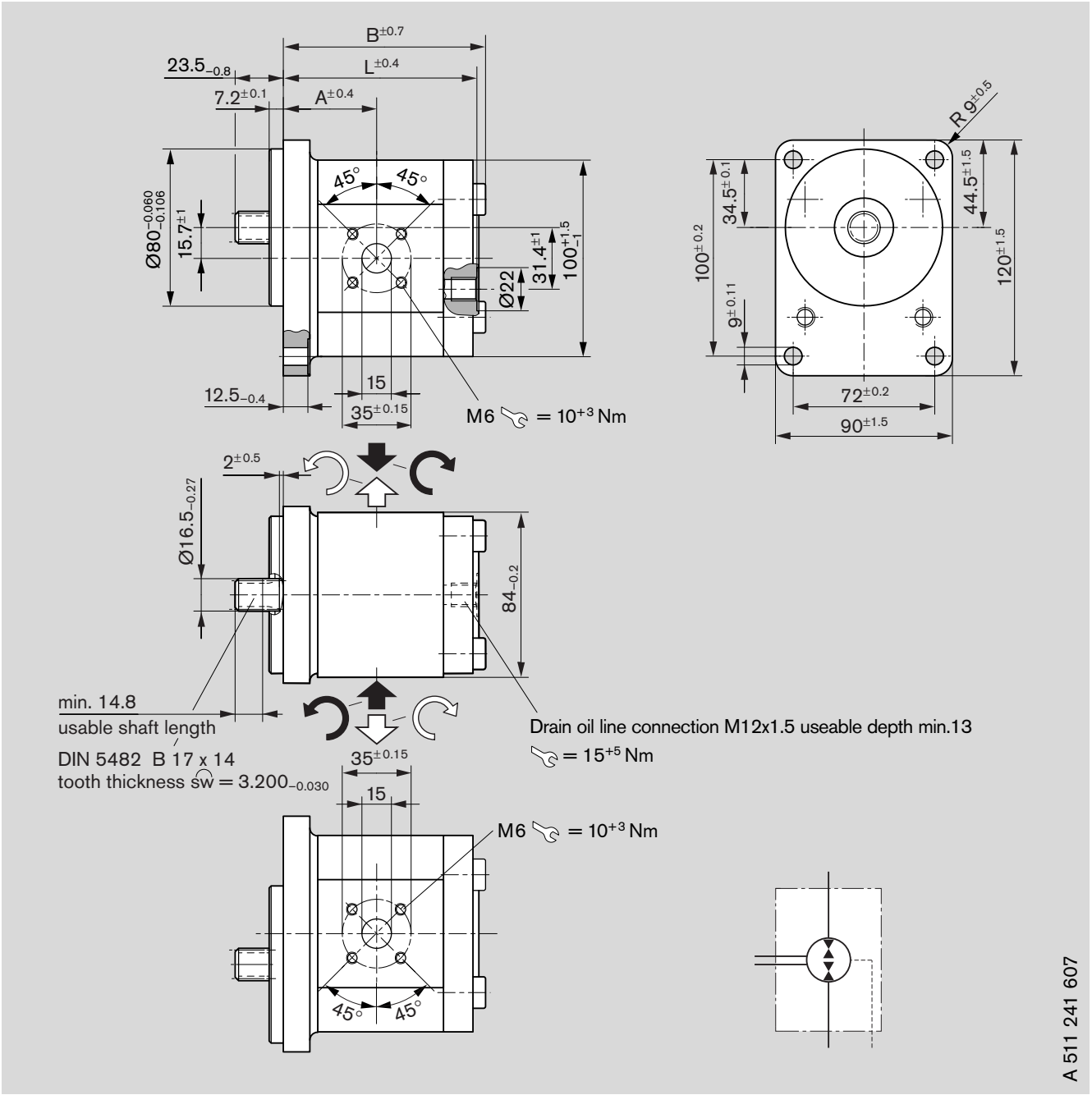

Ordering code

AZMF – 10 – ☐ ☐ ☐ U F B 20 M L

Displacement [cm³/rev]	Ordering-No. Universal	Max. operating pressure [bar]	Min. rotating speed [min⁻¹]	Max. rotating speed [min⁻¹]	kg	Dimension [mm] A	B	L
8	**0 511 425 603**	210	500	4,000	2.9	43.2	91.0	85.8
11	**0 511 525 601**	210	500	3,500	3.0	47.0	96.0	90.8
16	**0 511 625 603**	210	500	3,000	3.4	47.5	104.4	99.2
19	**0 511 625 605**	180	500	3,000	3.6	47.5	109.4	104.2
22.5	**0 511 725 602**	180	500	3,000	3.8	55.1	114.8	109.6

Dimensions in mm

F-Motor

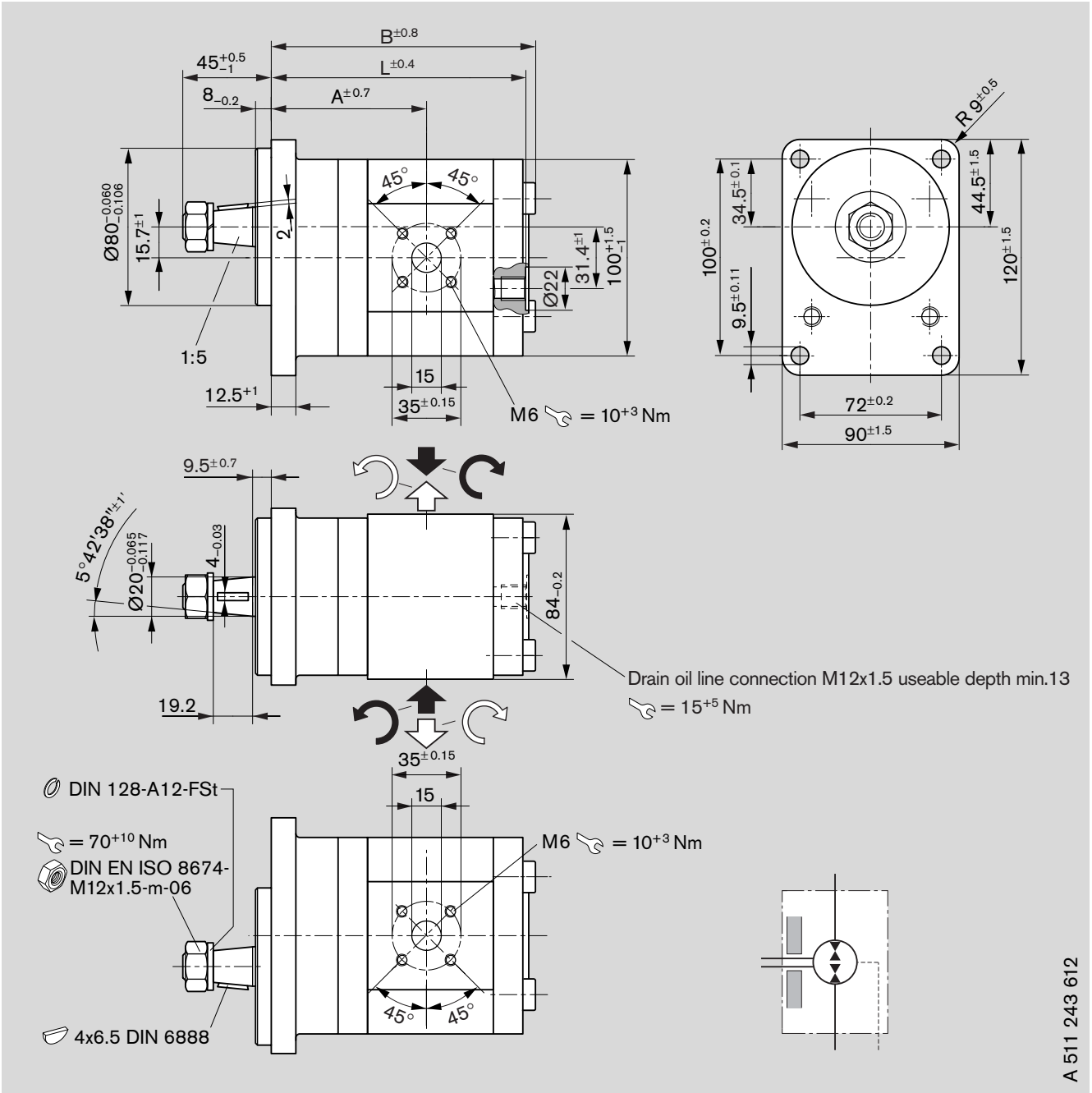

Ordering code

AZMF – 10 – ☐ ☐ ☐ U S A 20 M L

Displacement [cm³/rev]	Ordering-No. Universal	Max. operating pressure [bar]	Min. rotation speed [min⁻¹]	Max. rotation speed [min⁻¹]	kg	Dimension [mm] A	B	L
8	**0 511 445 601**	250	500	4,000	3.5	74.8	120.8	116.9
11	**0 511 545 601**	250	500	3,500	3.6	78.6	125.8	121.9
16	**0 511 645 601**	230	500	3,000	4.0	79.1	134.2	130.3
19	**0 511 645 603**	190	500	3,000	4.2	79.1	139.2	135.3

Dimensions in mm

F-Motor

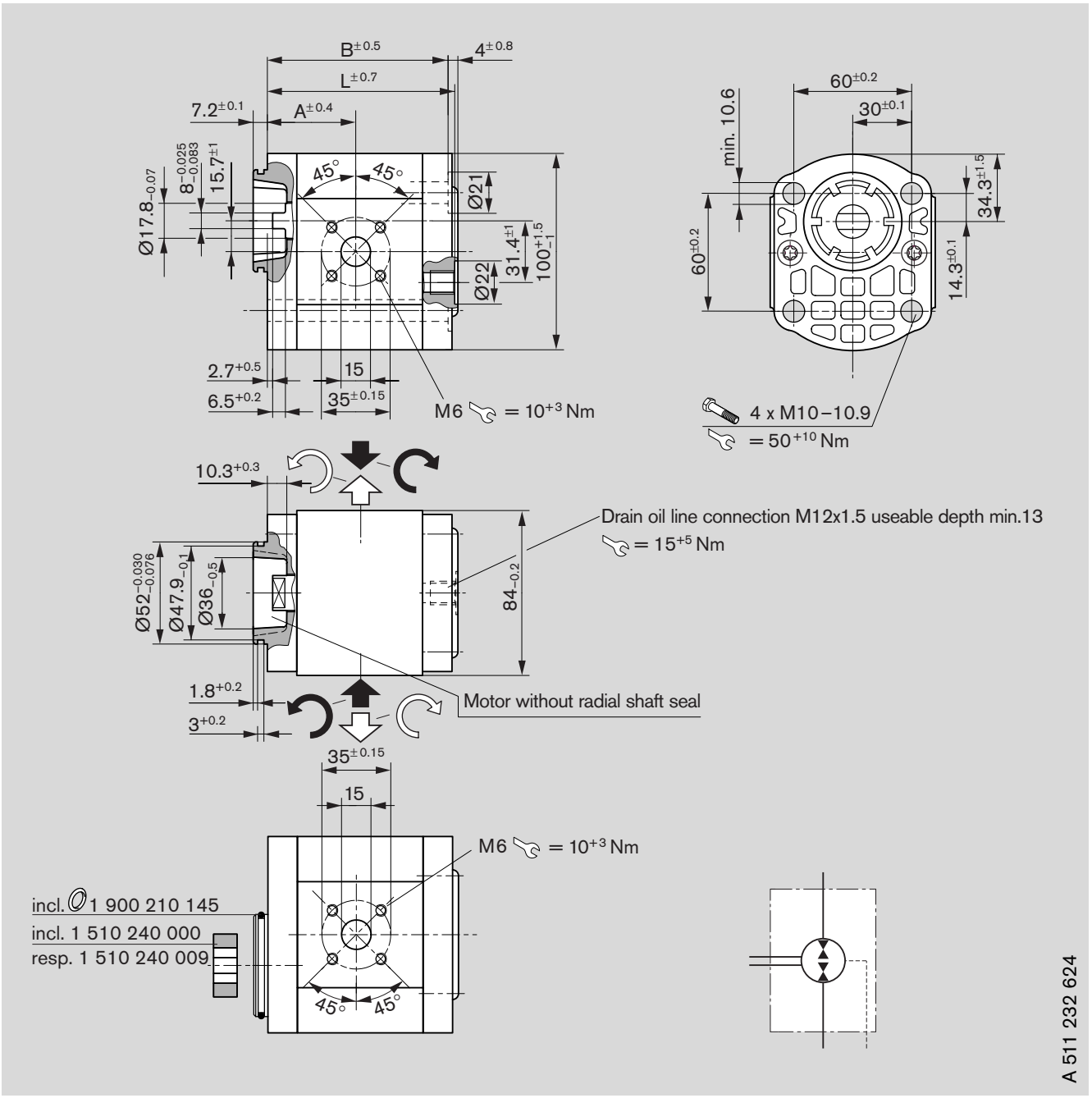

Ordering code

AZMF – 10 – ☐ ☐ ☐ U N T 20 M L – S0164

Displacement [cm³/rev]	Ordering-No. Universal	Max. operating pressure [bar]	Min. rotation speed [min⁻¹]	Max. rotation speed [min⁻¹]	kg	Dimension [mm] A	B	L
8	**0 511 415 605**	250	500	4,000	2.5	40.7	80.3	82.8
11	**0 511 515 602**	250	500	3,500	2.6	44.5	85.3	87.8
16	**0 511 615 607**	230	500	3,000	3.0	45.0	93.7	96.2
19	**0 511 615 608**	190	500	3,000	3.2	45.0	98.7	101.2
22.5	**0 511 715 601**	160	500	3,000	3.4	52.6	104.1	106.6

Dimensions in mm

F-Motor

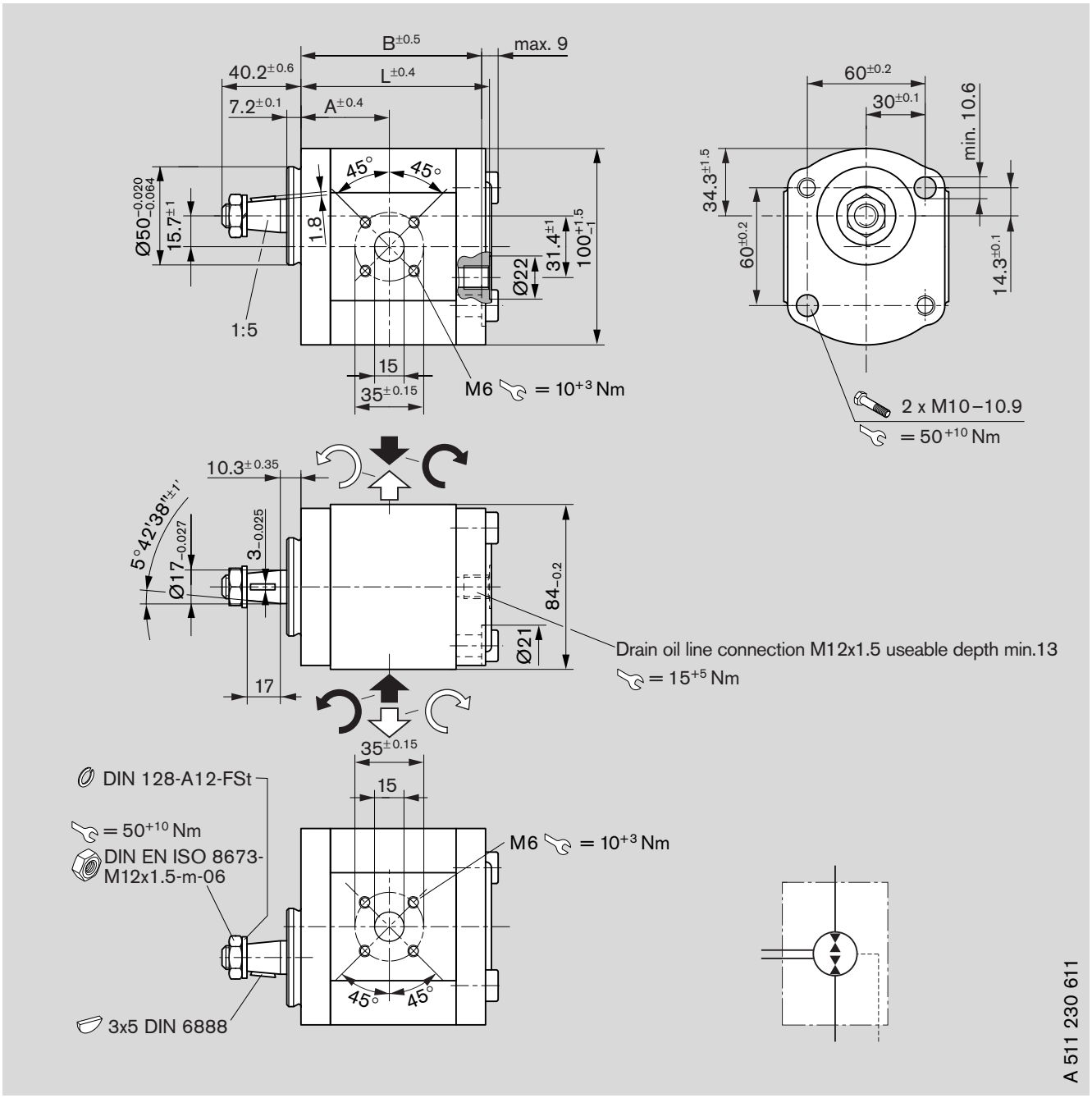

Ordering code

AZMF – 1X – ☐ ☐ ☐ U C P 20 M L

Displace-ment [cm³/rev]	Ordering-No. Universal	Max. operating pressure [bar]	Min. rotation speed [min⁻¹]	Max. rotation speed [min⁻¹]	kg	Dimension [mm] A	B	L
8	**0 511 415 606**	210	500	4,000	2.8	40.7	80.3	83.3
11	**0 511 515 601**	210	500	3,500	2.8	44.5	85.3	88.3
14	**0 511 515 605**	210	500	3,000	3.1	45.0	90.3	93.3
16	**0 511 615 609**	210	500	3,000	3.1	45.0	93.7	96.7

Dimensions in mm

F-Motor

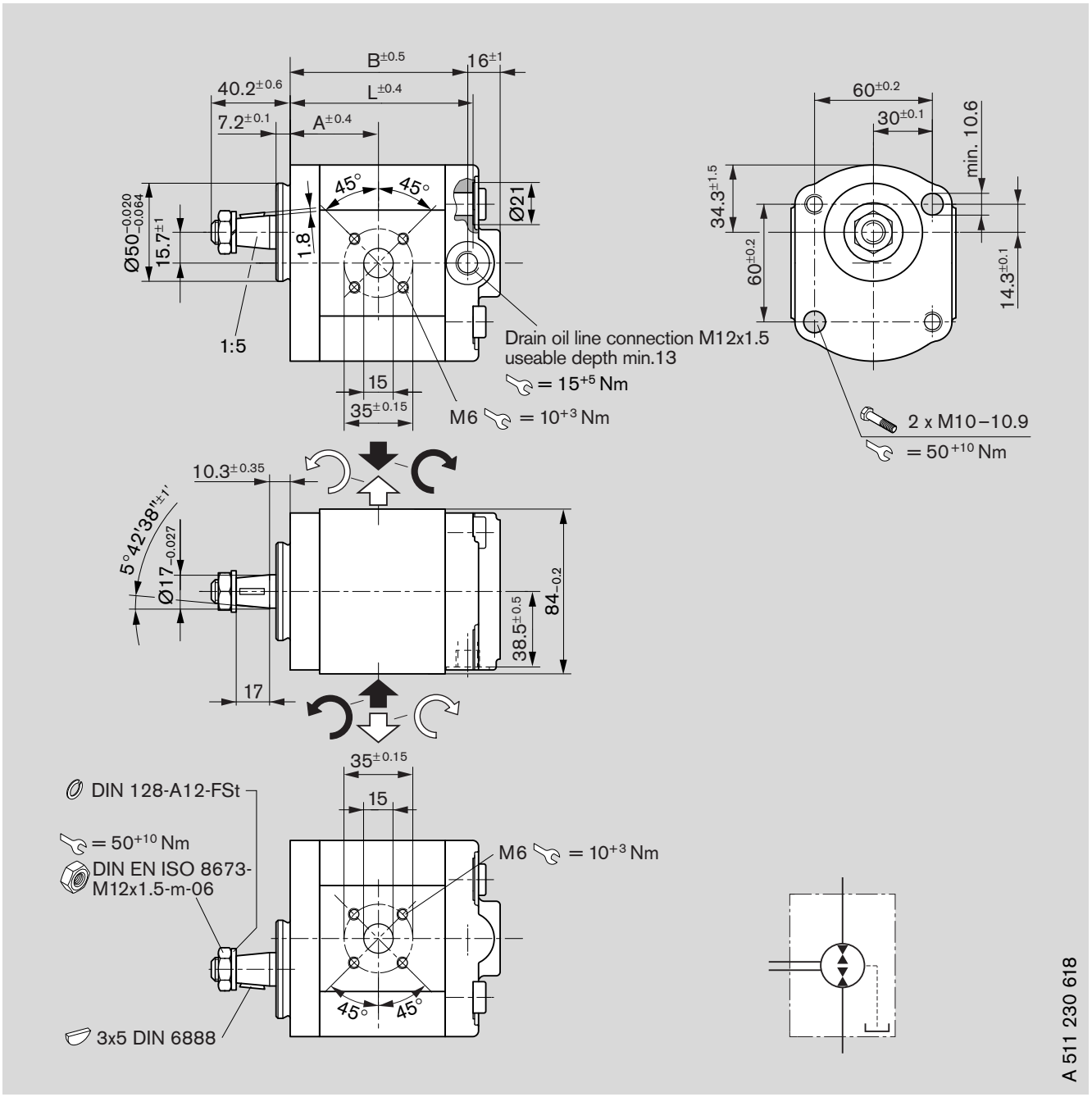

Ordering code

AZMF – 11 – ☐ ☐ ☐ U C N 20 M B – S0077

Displacement [cm³/rev]	Ordering-No. Universal	Max. operating pressure [bar]	Min. rotation speed [min⁻¹]	Max. rotation speed [min⁻¹]	kg	Dimension [mm] A	B	L
8	**0 511 415 607**	210	500	4,000	2.9	40.7	80.3	80.3

Dimensions in mm

F-Motor

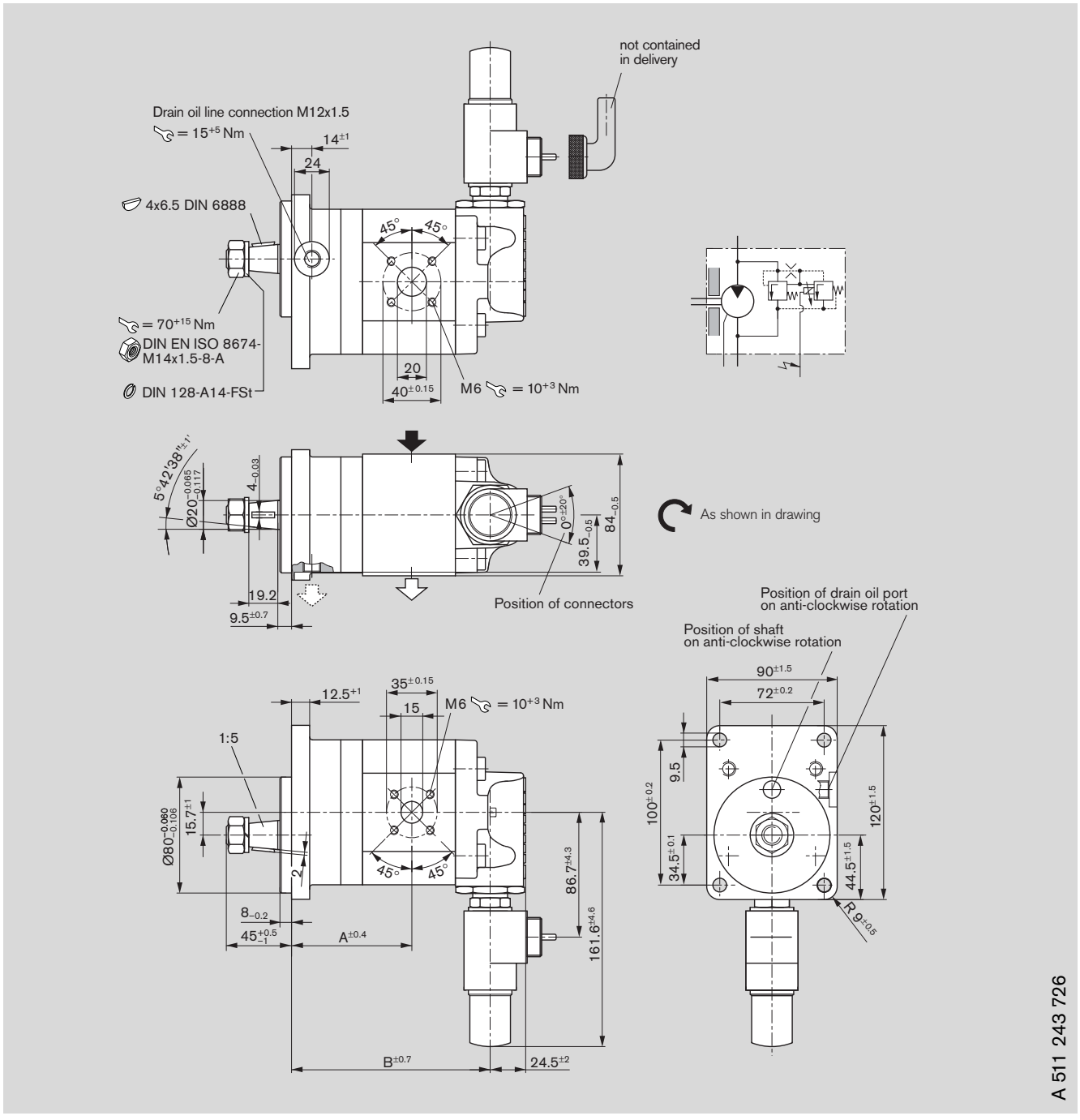

Ordering code

AZMF – 11 – ☐ ☐ ☐ ☐ S A 20 P GXXXX

AZMF – 12 – ☐ ☐ ☐ ☐ S A 20 P GXXXX*

Displace-ment [cm³/rev]	Ordering-No. L	Ordering-No. R	Min. rotation speed [min⁻¹]	Max. rotation speed [min⁻¹]	PVR [bar]	Coil nominal current [A]	kg	Dimension [mm] A	Dimension [mm] B
16	–	**0 511 645 007**	500	3,000	130	1.5	5.0	79.0	137.7
16	–	**0 511 645 005** *	500	3,000	170	1.5	5.0	79.0	137.7
16	**0 511 645 306**	–	500	3,000	170	1.5	5.1	79.0	137.7
16	**0 511 645 307**	–	500	3,000	210	1.5	5.1	79.0	137.7
16	–	**0 511 645 011** *	500	3,000	210	1.5	5.1	79.0	137.7

Dimensions in mm

F-Motor

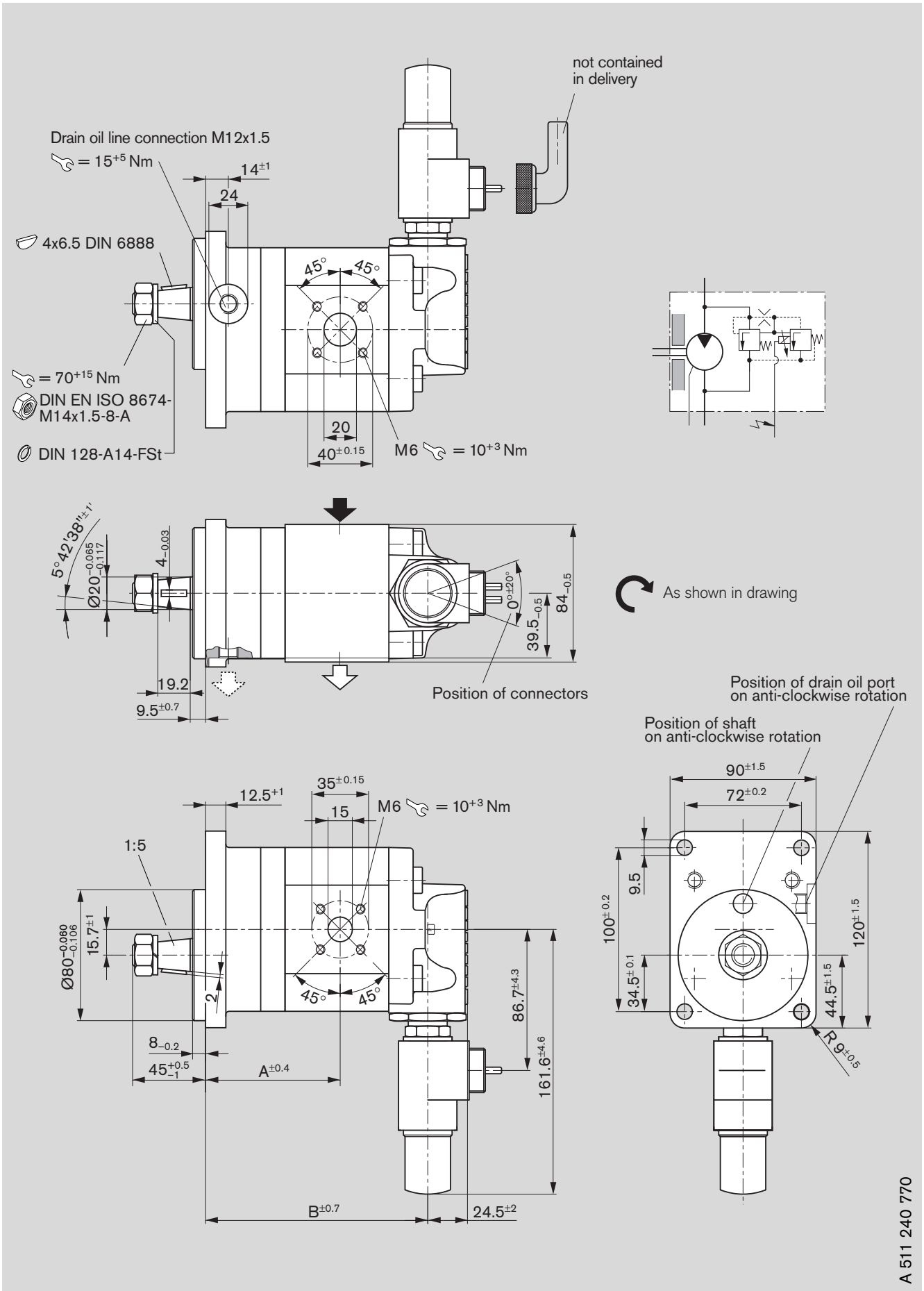

Dimensions in mm

F-Motor

Ordering code

AZMF – 11 – ☐ ☐ ☐ ☐ C B 20 P GXXXX

Displacement [cm³/rev]	Ordering-No. L	Ordering-No. R	Min. rotation speed [min⁻¹]	Max. rotation speed [min⁻¹]	PRV [bar]	Coil nominal current [I]	kg	Dimension [mm] A	Dimension [mm] B
8	**0 511 425 302**	–	500	4,000	210	0.75	4.7	48.7	98.3
8	–	**0 511 425 015**	500	4,000	90	1.5	4.6	48.7	98.3
8	–	**0 511 425 013**	500	4,000	130	1.5	4.7	48.7	98.3
8	–	**0 511 425 012**	500	4,000	170	1.5	4.7	48.7	98.3
8	–	**0 511 425 014**	500	4,000	150	1.5	4.7	48.7	98.3
11	–	**0 511 525 013**	500	3,500	170	1.5	4.7	47.5	103.5
11	–	**0 511 525 011**	500	3,500	180	0.75	4.8	47.5	103.5
11	**0 511 525 309**	–	500	3,500	90	1.5	4.8	47.5	103.5
11	**0 511 525 308**	–	500	3,500	180	0.75	4.8	47.5	103.5
14	–	**0 511 525 014**	500	3,000	210	1.5	4.9	43.2	108.5
16	–	**0 511 625 019**	500	3,000	210	1.5	5.0	47.5	111.7
16	**0 511 625 309**	–	500	3,000	210	1.5	5.0	47.5	111.7
16	–	**0 511 625 020**	500	3,000	210	0.75	5.0	47.5	111.7
19	–	**0 511 625 018**	500	3,000	210	1.5	5.1	47.5	116.7
19	–	**0 511 625 022**	500	3,000	210	0.75	4.0	47.5	116.7
19	–	**0 511 625 021**	500	3,000	180	0.75	5.1	47.5	116.7
22.5	**0 511 725 311**	–	500	3,000	210	1.5	5.3	55.1	122.1
22.5	–	**0 511 725 021**	500	3,000	210	1.5	5.3	55.1	122.1
22.5	–	**0 510 725 023**	500	3,000	210	0.75	5.3	55.1	122.1
22.5	–	**0 511 725 027**	500	3,000	170	1.5	5.2	55.1	122.1

Dimensions in mm

F-Motor

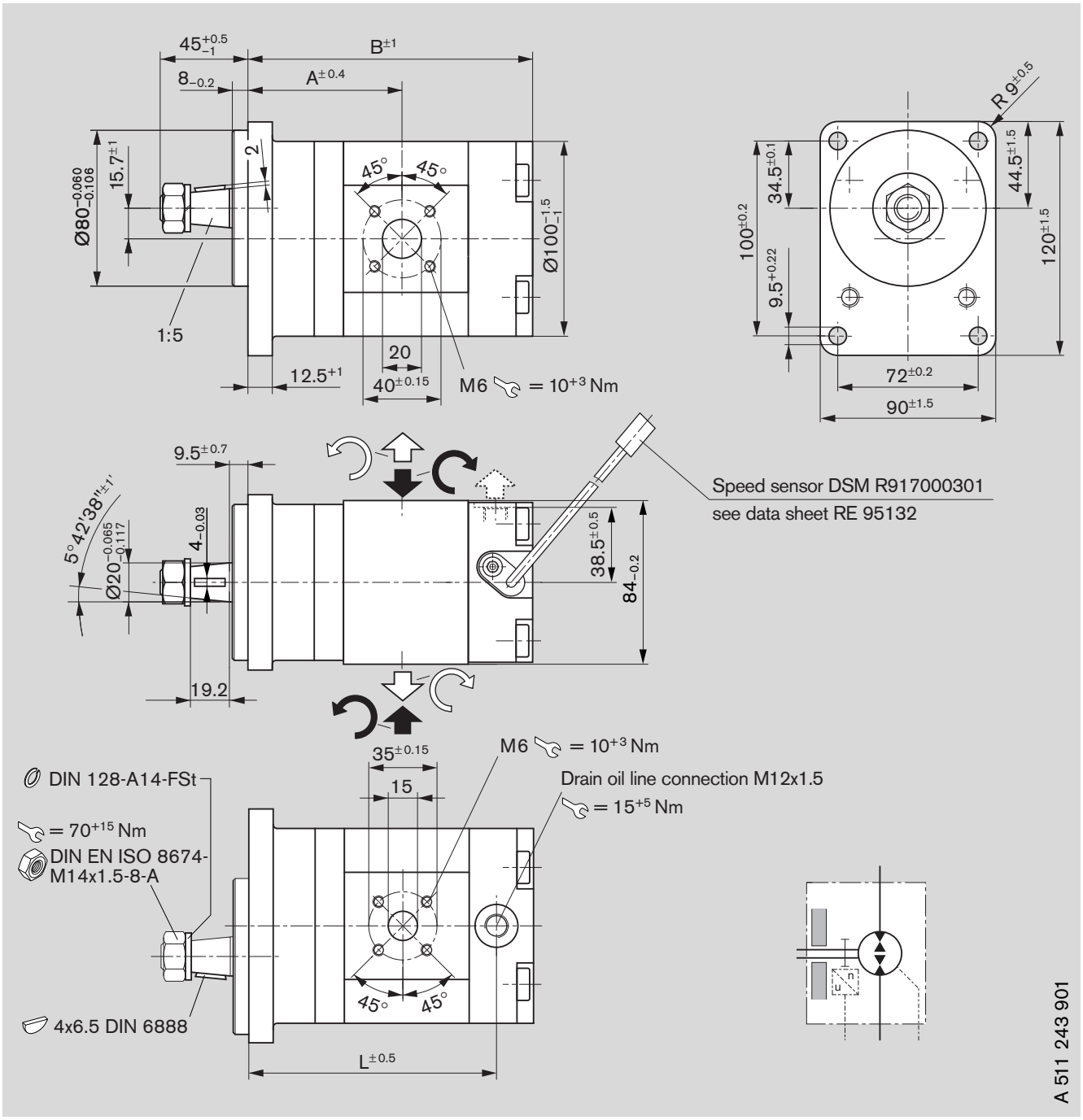

Ordering code

AZMF – 12 – ☐ ☐ ☐ U S A 20 P L – S0079

Displacement [cm³/rev]	Ordering-No. Universal	Max. operating pressure [bar]	Min. rotation speed [min⁻¹]	Max. rotation speed [min⁻¹]	kg	Dimension [mm] A	B	L
16	**0 511 645 607**	230	500	3,000	3.6	79	146.7	127.7

Dimensions in mm

N-Motor

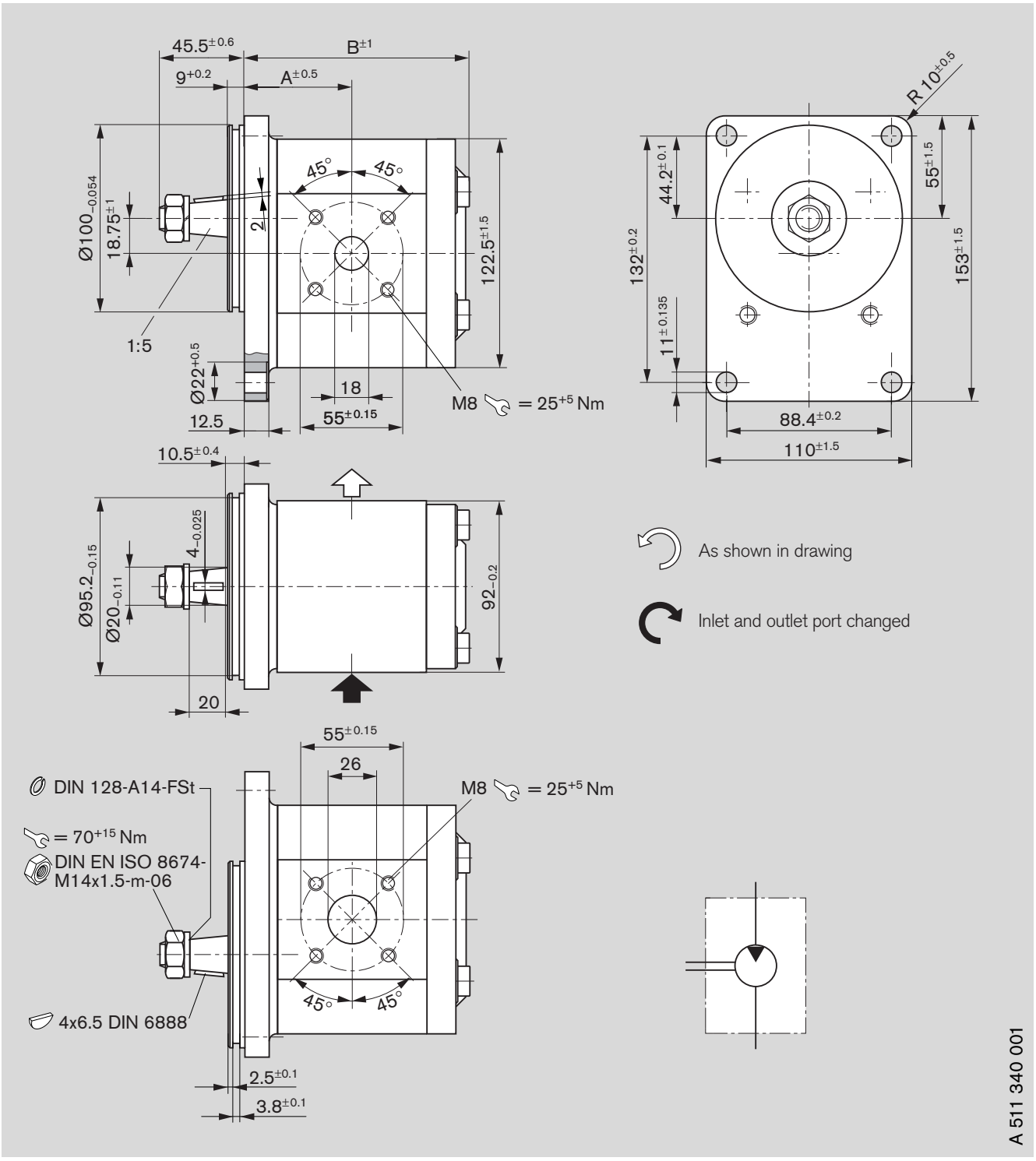

Ordering code

AZMN – 11 – ☐ ☐ ☐ ☐ C B 20 M B

Displacement [cm³/rev]	Ordering-No. L	Ordering-No. R	Max. operating pressure [bar]	Min. rotation speed [min⁻¹]	Max. rotation speed [min⁻¹]	kg	Dimension [mm] A	Dimension [mm] B
25	**0 511 725 307**	–	210	500	3,000	6.3	55.0	116.1
28	**0 511 725 309**	**0 511 725 019**	200	500	3,000	6.3	56.6	119.1

Dimensions in mm

N-Motor

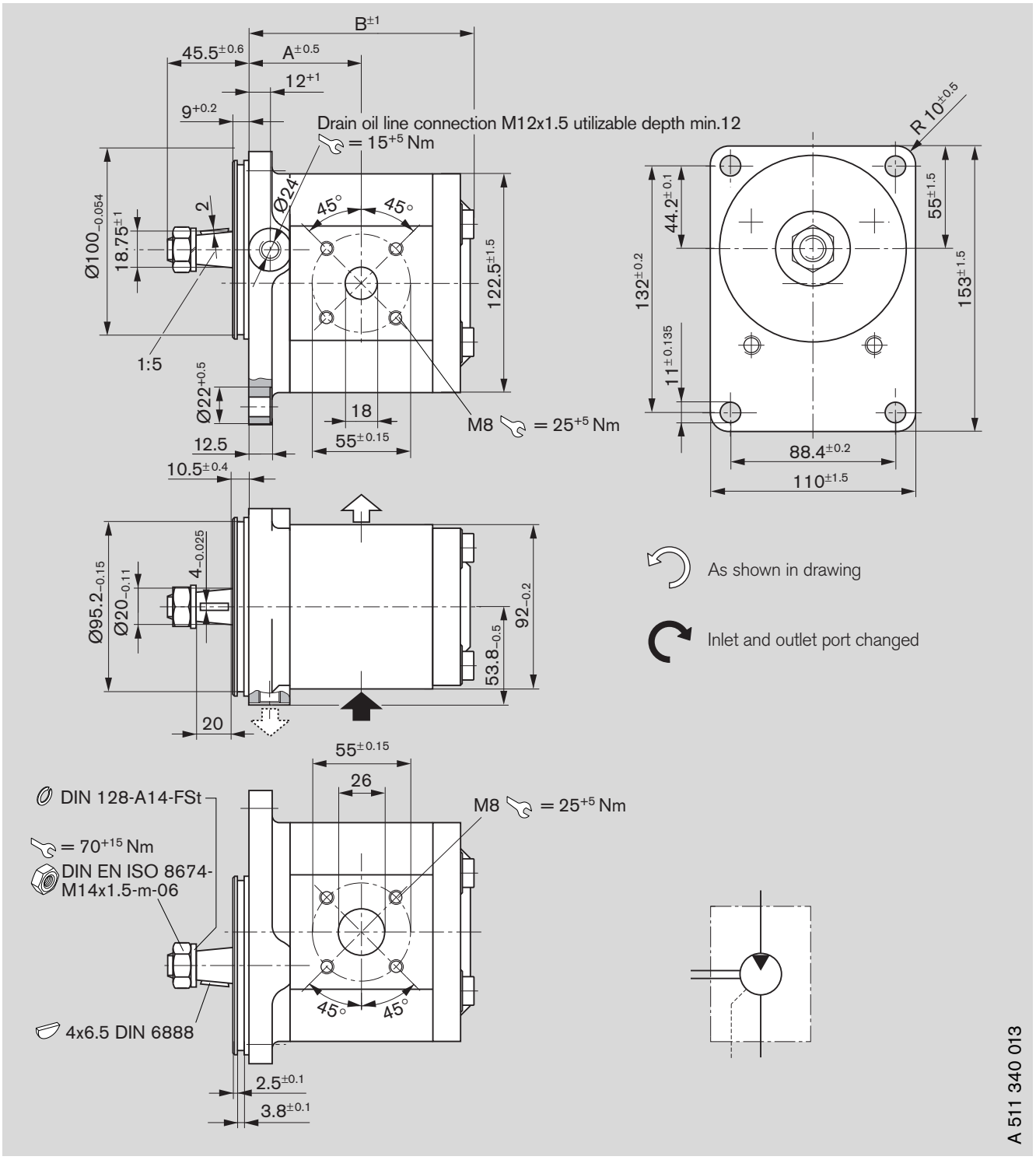

Ordering code

AZMN – 11 – ☐ ☐ ☐ ☐ C B 20 P B – S0097

Displacement [cm³/rev]	Ordering-No. L	Ordering-No. R	Max. operating pressure [bar]	Min. rotation speed [min⁻¹]	Max. rotation speed [min⁻¹]	kg	Dimension [mm] A	Dimension [mm] B
25	–	**0 511 725 024**	210		3,000	10.3	60.5	120.8
28	**0 511 725 312**	–	210		2,800	6.1	62.0	123.8

Dimensions in mm

G-Motor

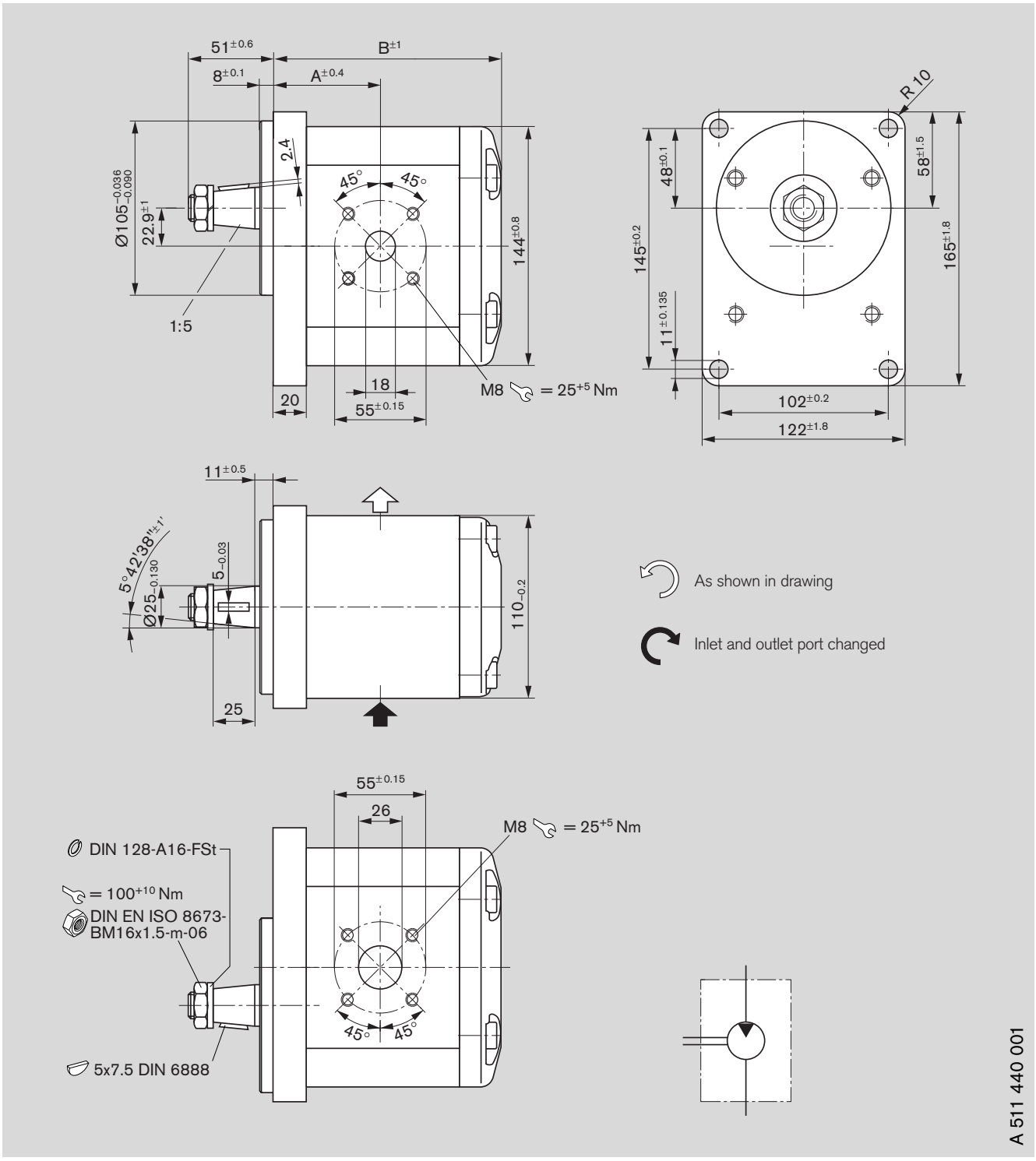

Ordering code

AZMG – 11 – ☐ ☐ ☐ ☐ C B 20 M B

Displacement [cm³/rev]	Ordering-No. L	Ordering-No. R	Max. operating pressure [bar]	Min. rotation speed [min⁻¹]	Max. rotation speed [min⁻¹]	kg	Dimension [mm] A	Dimension [mm] B
22.5	**0 511 725 300**	**0 511 725 001**	180	500	3,000	9.1	61.0	128.7
32	**0 511 725 301**	**0 511 725 002**	180	500	2,800	9.6	64.5	137.2
45	**0 511 725 302**	**0 511 725 003**	180	500	2,600	10.1	69.5	149.2

Dimensions in mm

G-Motor

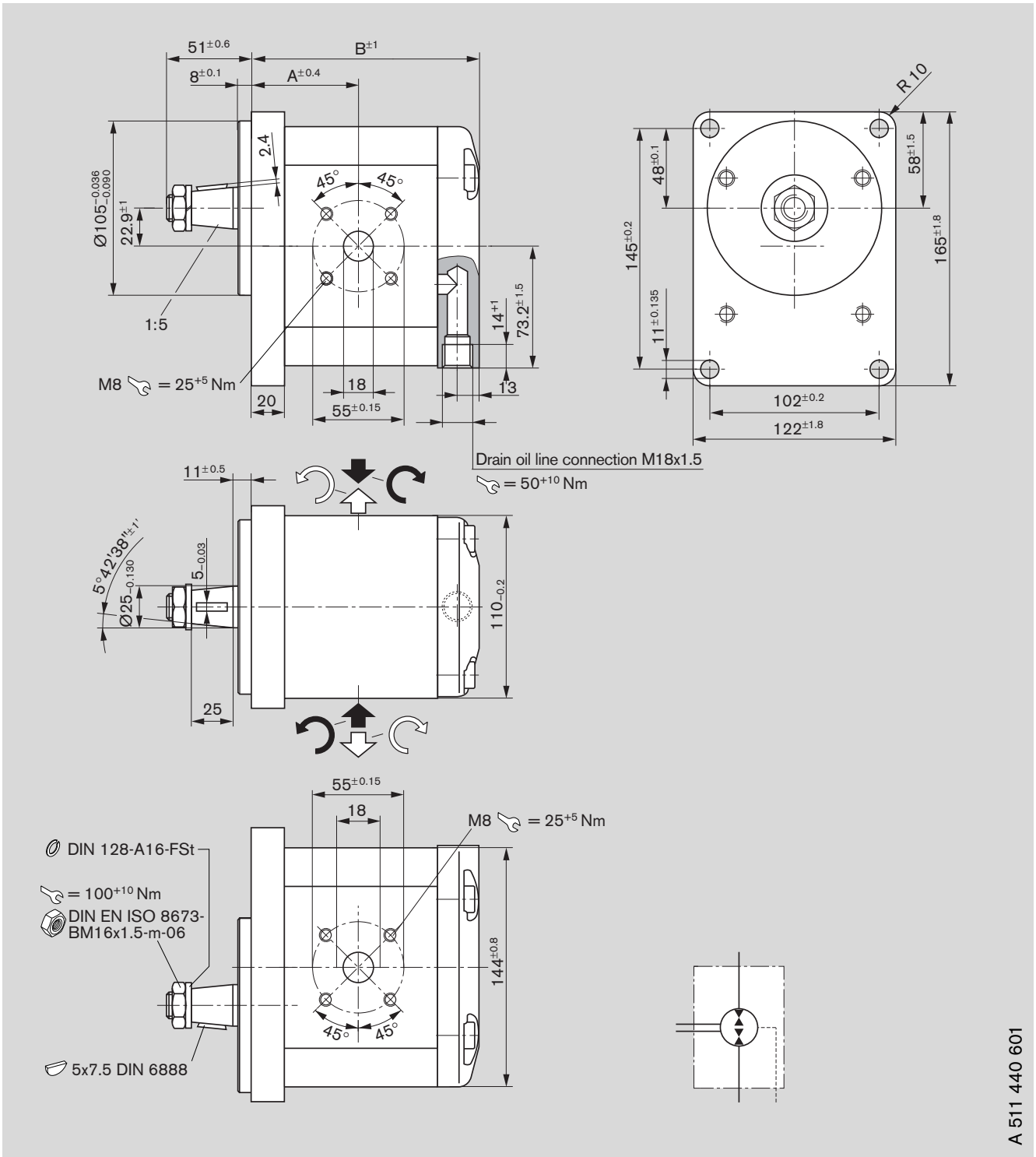

Ordering code

AZMG – 11 – ☐ ☐ ☐ U C B 20 K X* – S0077

AZMG – 11 – ☐ ☐ ☐ U C B 20 M X – S0077

Displacement [cm³/rev]	Ordering-No. Universal	Max. operating pressure [bar]	Min. rotation speed [min⁻¹]	Max. rotation speed [min⁻¹]	kg	Dimension [mm] A	B
22.5	**0 511 725 600**	210	500	3,000	9.0	61.0	128.7
28	**0 511 726 603**	210	500	3,000	9.2	63.0	133.7
32	**0 511 726 604***	210	500	2,800	9.4	64.5	137.2

Dimensions in mm

G-Motor

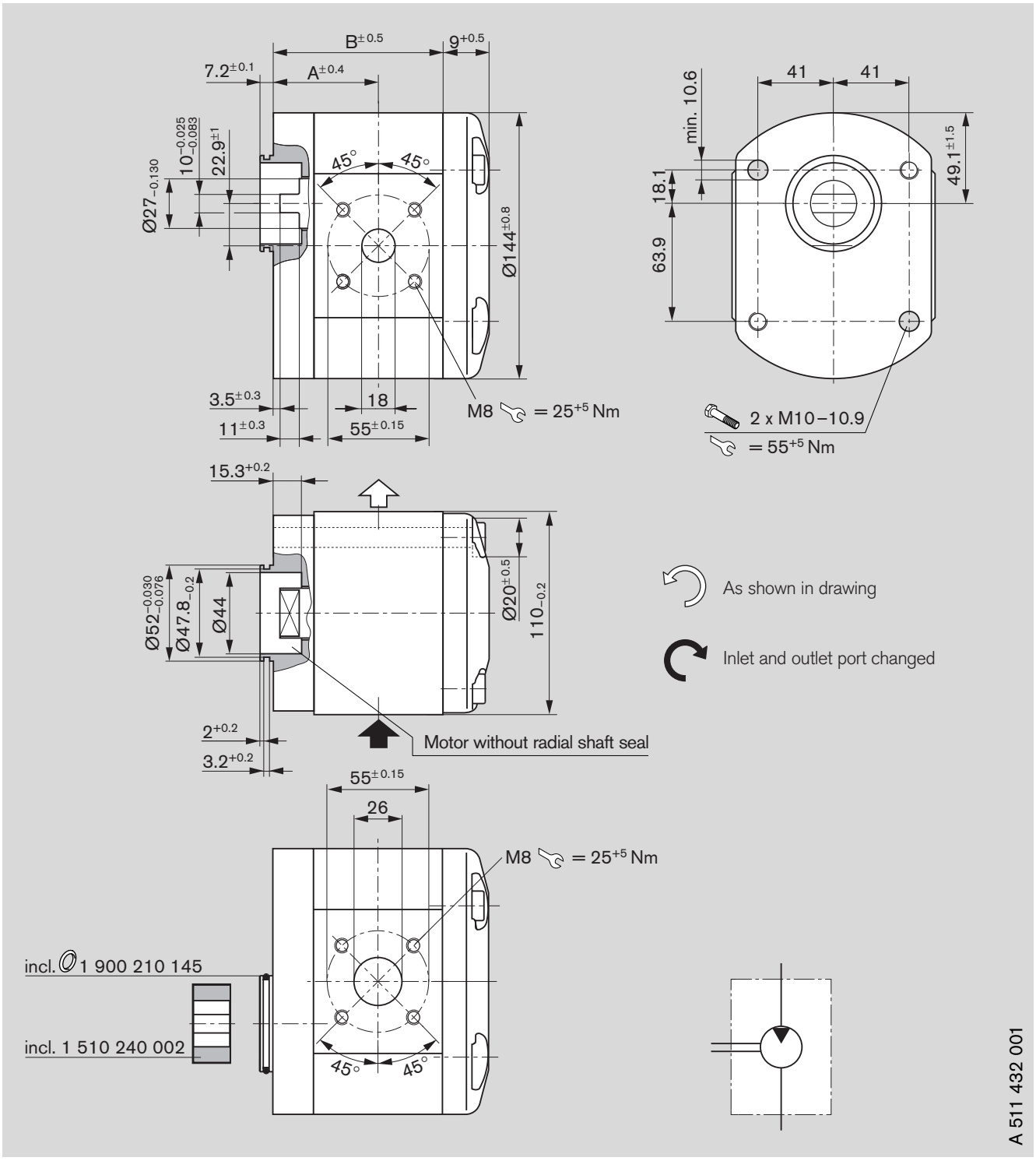

Ordering code

AZMG – 11 – ☐ ☐ ☐ ☐ N M 20 M B

Displacement [cm³/rev]	Ordering-No. L	Ordering-No. R	Max. operating pressure [bar]	Min. rotation speed [min⁻¹]	Max. rotation speed [min⁻¹]	kg	Dimension [mm] A	Dimension [mm] B
45		**0 511 715 002**	210	500	2,600	8.4	70.5	151.2

Notes

Filter recommendation
The major share of premature failures in external gear motors is caused by contaminated pressure fluid.
As a warranty cannot be issued for dirt-specific wear, we recommended filtration compliant with cleanliness level 20/18/15 ISO 4406, which reduces the degree of contamination to a permissible dimension in terms of the size and concentration of dirt particles:

Operating pressure [bar]	>160	<160
Contamination class NAS 1638	9	10
Contamination class ISO 4406	18/15	19/16
To be reached with $\beta_X = 75$	20	25

We recommend that a full-flow filter always be used.
Basic contamination of the pressure fluid used may not exceed class 20/18/15 according to ISO 4406. Experience has shown that new fluid quite often lies above this value. In such instances a filling device with special filter should be used.

General
- The motors supplied by us have been checked for function and performance. No modifications of any kind may be made to the pumps; any such changes will render the warranty null and void!
- Motor may only be operated in compliance with permitted data (see pages 14 – 18).

Project planning notes
Comprehensive notes and suggestions are available in Hydraulics Trainer, Volume 3 RE 00 281, “Project planning notes and design of hydraulic systems”. Where external gear motors are used we recommend that the following note be adhered to.

Technical data
All stated technical data is dependent on production tolerances and is valid for specific marginal conditions.
Note that, as a consequence, scattering is possible, and at certain marginal conditions (e.g. viscosity) **the technical data may change.**

Characteristics
When designing the external gear motor, note the maximum possible service data based on the characteristics displayed on pages 10 to 14.

Additional information on the proper handling of hydraulic products from Bosch Rexroth is available in our document:
“General product information for hydraulic products”
RE 07 008.

Leakage oil line
A leakage oil line must be connected directly to the tank in reversible motors or motors stressed by run-back. Observe sufficient dimensions.

Contained in delivery
The components with characteristics as described under device measurements and ordering code, pages 19 – 39, are contained in delivery.

You can find further information in our publication:
“General Operating Instructions for External Gear Units”
RE 07 012-B1.

Radial piston motors

Designation	Type	Frame size	Series	Data sheet	Page
Radial piston motor for frame integrated drives	MCR-A	3...15	3x	15195	739
Radial piston motor for compact drives	MCR-C	20	33	15197	753
Radial piston motor for wheel drives	MCR-F	3...15	3x	15198	767
Radial piston motor for integrated drives	MCR-H	3...20	33	15199	787
Radial piston motor for hydraulic drive assist	MCR-R	10	41	15223	803
Radial piston motor for track drives	MCR-T	5...10	33	15221	811
Radial piston motor for heavy duty wheel drives	MCR-W	3...10	33	15200	823
Radial piston motor for slew drives	MCR-X	3...5	3x	15214	841
Radial piston motors for industrial applications	MCR-D/MCR-E	3...10	33	15196	851

Radial piston motor for frame integrated drives
MCR-A

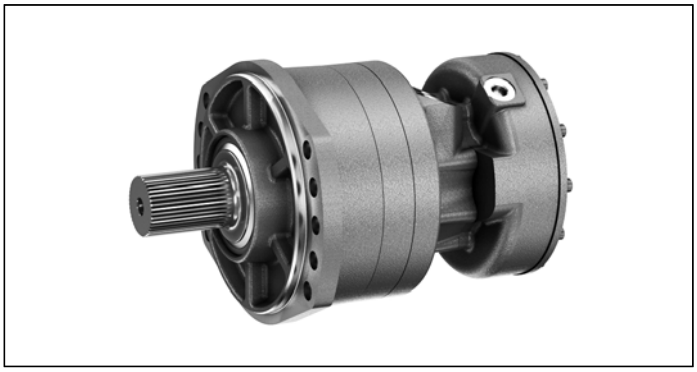

- Frame size MCR3, MCR5, MCR10, MCR15
- Displacement 160 cc to 2150 cc
- Differential pressure up to 450 bar
- Torque output up to 13687 Nm
- Speed up to 875 rpm
- Open and closed circuits

Features

- Compact robust construction
- High volumetric and mechanical efficiencies
- Front case mount
- Splined drive shaft
- High reliability
- Low maintenance
- Smooth running at very low speeds
- Low noise
- Bi-directional
- Sealed tapered roller bearings
- Freewheeling possible
- Available with:
  - Holding brake (multi-disc)
  - Bi-directional two speed
  - Integrated flushing valve
  - Speed sensor

Contents

Functional description	2
Ordering code	5
Technical data	7
Efficiencies	8
Permitted loading on drive shaft	9
Dimensions	10
Selection guide	14

6

Functional description

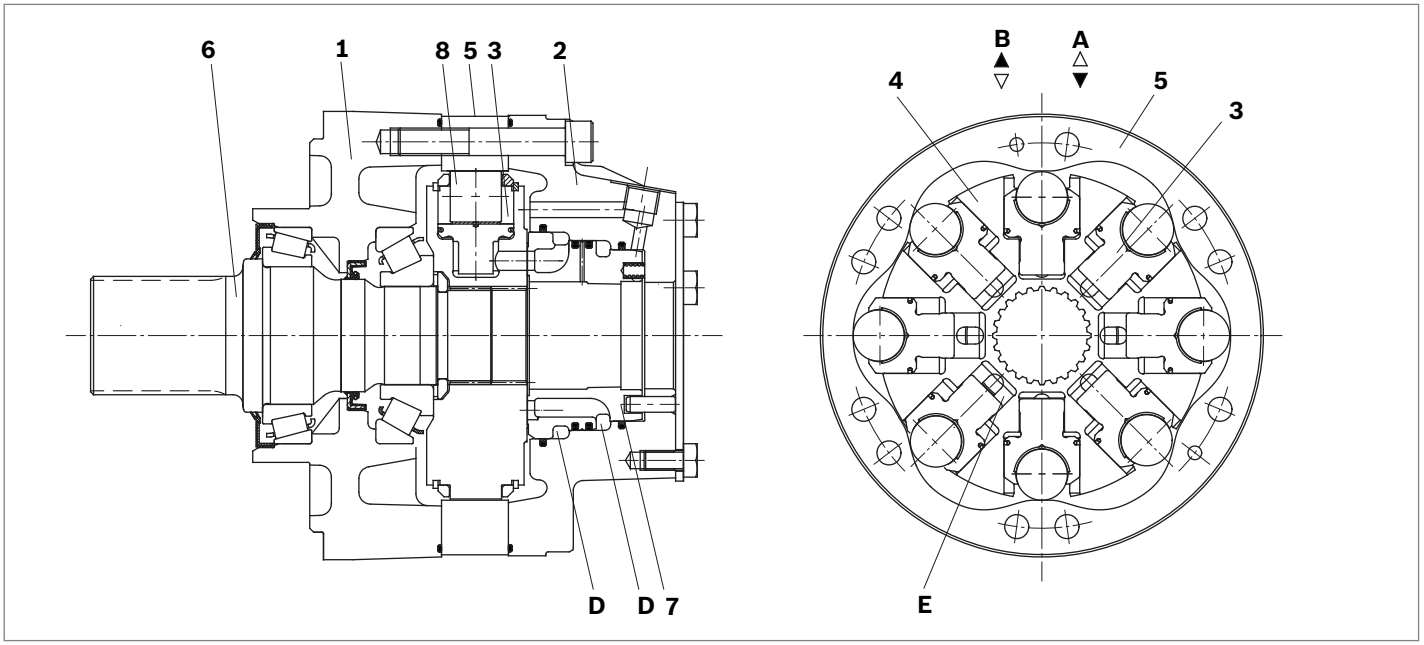

Hydraulic motors of the type MCR-A are radial piston motors with front case mounting and splined drive shaft. The MCR-A motors are intended for open or closed circuit operations as drive motors for the chain drive function primarily on skid steer loaders. A-type motors can be used for a variety of applications depending on the attachment that can be mounted on the spline shaft of the motor (e. g. gear drive, sprocket, chain drive).

Construction

Two part housing (**1**, **2**), rotary group (**3**, **4, 8**), cam (**5**), drive shaft (**6**) and flow distributor (**7**)

Transmission

The cylinder block (**4**) is connected to the shaft (**6**) by means of splines. The pistons (**3**) are arranged radially in the cylinder block (**4**) and make contact with the cam (**5**) via rollers (**8**).

Torque generation

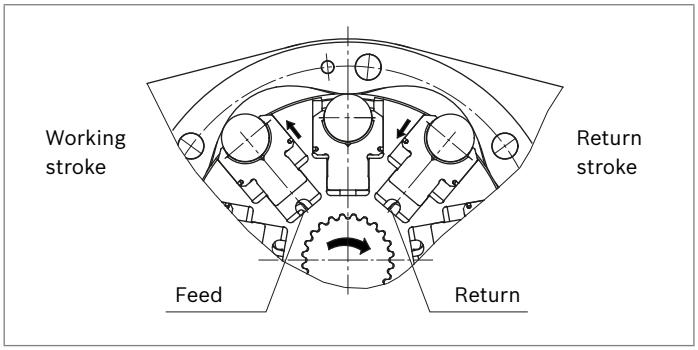

The number of working and return strokes corresponds to the number of lobes on the cam multiplied by number of pistons in the cylinder block.

Flow paths

The ports **A** and **B**, which are located in the rear case, carry oil through the distributor to the cylinder chambers (**E**).

Bearings

Tapered roller bearings capable of transmitting high axial and radial forces are fitted as standard.

Freewheeling

In certain applications there may be a requirement to free-wheel the motor. This may be achieved by connecting ports **A** and **B** to zero pressure and simultaneously applying a pressure of 2 bar to the housing through port **L**. In this condition, the pistons are forced into the cylinder block which forces the rollers to lose contact with the cam thus allowing free rotation of the shaft.

Two speed operation (2W)

In mobile applications where vehicles are required to operate at high speed with low motor loads, the motor can be switched to a low-torque and high-speed mode. This is achieved by operating an integrated valve which directs hydraulic fluid to only one half of the motor while continuously re-circulating the fluid in the other half. This “reduced displacement” mode reduces the flow required for a given speed and gives the potential for cost and efficiency improvements. The motor maximum speed remains unchanged.

Bosch Rexroth has developed a special spool valve to allow smooth switching to reduced displacement whilst on the move. This is known as “soft-shift” and is a standard feature of 2W motors. The spool valve requires either an additional sequence valve or electro-proportional control to operate in “soft-shift” mode.

▼ **Schematic**

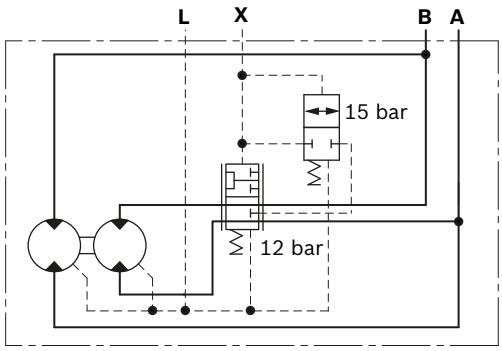

Flushing valve

In a closed circuit, the same hydraulic fluid continuously flows between the pump and the motor. This could therefore lead to overheating of the hydraulic fluid.

The function of the flushing valve option is to replace hydraulic fluid in the closed circuit with that from the reservoir. When the hydraulic motor is operated under load, either in the clockwise or anti-clockwise direction, the flushing valve opens and takes a fixed flow of fluid through an orifice from the low pressure side of the circuit. This flow is then fed to the motor housing and back to the reservoir normally via a cooler. In order to charge the low pressure side of the circuit, cool fluid is drawn from the reservoir by the boost pump and is fed to the pump inlet through the check valve. Thus the flushing valve ensures a continuous renewal and cooling of the hydraulic fluid. The flushing feature incorporates a relief valve which is used to maintain a minimum boost pressure and operates at a standard setting of 14 bar (other options available on request).

Different orifice sizes may be used to select varying flows of flushing fluid. The following table gives flushing rate values based on a boost / charge pressure of 25 bar.

▼ **Schematic**

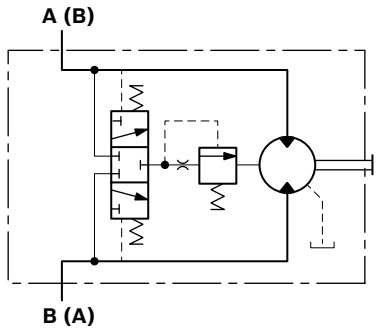

Flushing flow rates

Flushing code	Orifice size (mm)	Flow (l/min) at 25 bar[1)] min	max
F1	Ø1	2.2	2.7
F2	Ø1.5	5.0	6.1
F7	Ø1.7	6.4	7.8
F4	Ø2	8.2	10.7
F6	Ø2.3	8.8	11.4

1) 0.6 mm Shim (Standard), Cracking pressure = 11±3 bar

Holding brake (multi-disc brake)

Mounting
By way of rear housing (**2**) and brake shaft (**14**).

Brake application
As a safety requirement in mobile applications a parking brake may be provided to ensure that the motor cannot turn when the machine is not in use. The parking brake provides holding torque by means of discs (**11**) that are compressed by a disc spring (**10**). The brake is released when oil pressure is applied to brake port "**Z**" and the pressure in the annular area (**9**) compresses the disc spring using brake piston (**12**) thus allowing the brake discs (**11**) to turn independently.

Note
This brake is provided solely for static use - not to be used dynamically.

▼ **Schematic diagrams**

Motor without brake	Motor with holding brake
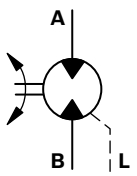	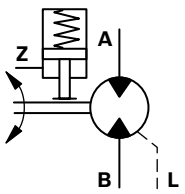

Manual release of holding brake
The brake may also be released manually by loosening screws (**13**).

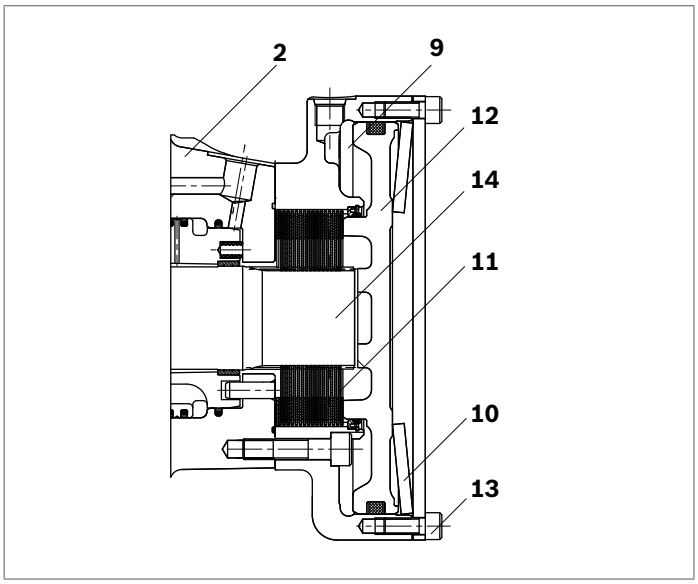

Speed sensor
A Hall-effect speed sensor (**16**) may be fitted as an option, giving a two-channel output of phase-displaced square waves, and enabling detection of speed and direction. A toothed target disc (**17**) is fitted to the motor cylinder block (**4**), and the sensor, fitted to a port in the rear case, produces a pulse on each channel as each tooth passes in front of it. The frequency of the pulses is proportional to the rotational speed.
Versions are available for use with regulated supplies 10 V (Code P1) and for direct connection to a 12 V or 24 V unregulated supply (Code P2).
The motor can also be supplied fitted with a target disc and with a speed sensor port machined, but covered and sealed with a blanking plate (Code P0). These "sensor-ready" motors may be fitted with a sensor at a later date.

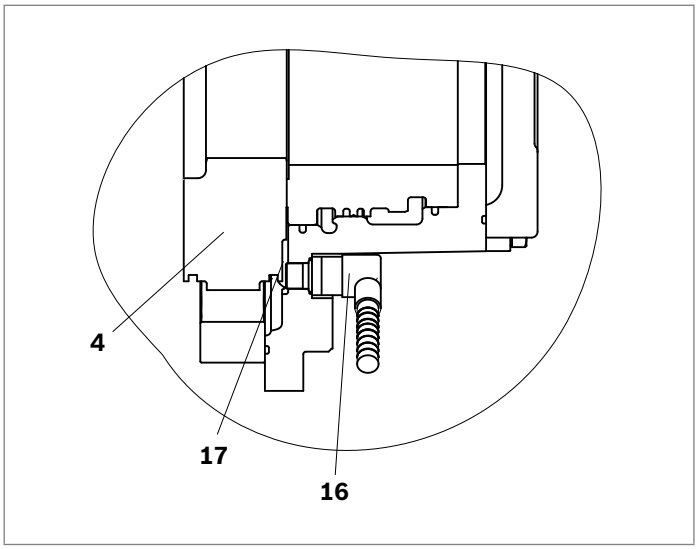

Direction of shaft rotation with flow
(viewed from drive shaft)

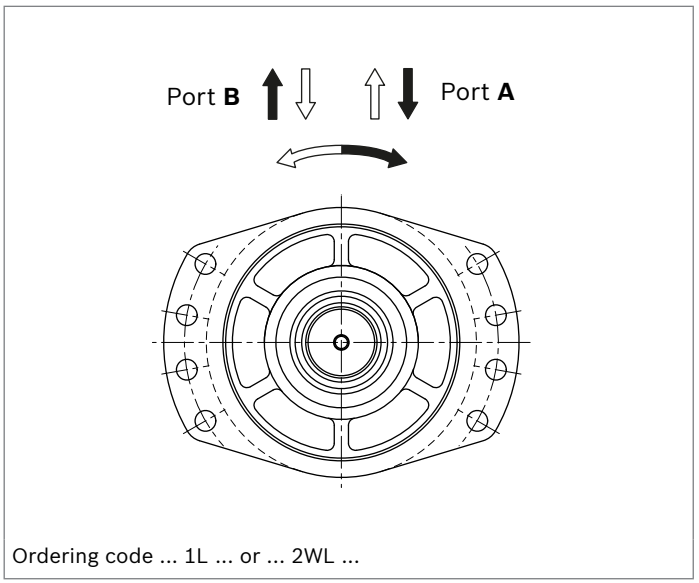

Ordering code ... 1L ... or ... 2WL ...

Ordering code

01	02	03	04	05	06		07	08	09	10	11	12	13	14	15	16
MCR		**A**			**Z**	**/**										

Radial piston motor

01	Radial-piston type, low-speed, high-torque motor	**MCR**

Frame size

02	Frame size	3	**3**
		5	**5**
		10	**10**
		15	**15**

Housing type

03	Front case flanged	**A**

Nominal size, displacement V_g in cm^3/rev

04	Frame size 3		**160**	**225**	**255**	**280**	**325**	**365**	**400**	
	Low displacement: motors use standard cylindrical pistons	LD	●	●	●	●	–	–	–	
	High displacement: motors use stepped pistons	HD	–	–	–	–	●	●	●	
	Frame size 5		**380**	**470**	**520**	**565**	**620**	**680**	**750**	**820**
	Low displacement: motors use standard cylindrical pistons	LD	●	●	●	●	–	–	–	–
	High displacement: motors use stepped pistons	HD	–	–	–	–	●	●	●	●
	Frame size 10		**780**	**860**	**940**	**1120**	**1250**	**1340**		
	Low displacement: motors use standard cylindrical pistons	LD	●	●	●	–	–	–		
	High displacement: motors use stepped pistons	HD	–	–	–	●	●	●		
	Frame size 15		**1130**	**1250**	**1500**	**1780**	**2150**			
	Low displacement: motors use standard cylindrical pistons	LD	●	●	●	–	–			
	High displacement: motors use stepped pistons	HD	–	–	–	●	●			

Drive shaft

05	Spline shaft ANSI B92.1	MCR3	**A45**
		MCR5	**A60**
		MCR10	**A75**
		MCR15	**W80**

Rear shaft

06	Without rear shaft	**Z**

Series

07	Series 32	**32**
	Series 33	**33**

Brake			**MCR3**	**MCR5**	**MCR10**	**MCR15**	
08	Without brake		●	●	●	●	**A0**
	Hydraulic release spring applied multi-disc holding brake	2200 Nm	●	●	–	–	**B2**
		4400 Nm	–	●	–	–	**B4**
		4400 Nm	–	–	●	–	**B5**
		7000 Nm	–	–	●	–	**B7**
		11000 Nm	–	–	–	●	**B11**

Seals

09	NBR (nitrile rubber)	**M**
	FKM (fluoroelastomer / Viton)	**V**

● = Available – = Not available

Ordering code

01	02	03	04	05	06		07	08	09	10	11	12	13	14	15	16
MCR		**A**			**Z**	**/**										

Single/two-speed operation		**MCR3**	**MCR5**	**MCR10**	**MCR15**	
10	Single speed, standard direction of rotation	●	●	●	●	**1L**
	Bi-directional two speed, standard direction of rotation[1)]	●	●	–	–	**2WL**
	Switchable two speed, anti-clockwise direction of rotation	–	●	–	●	**2L**
	Switchable two speed, clockwise direction of rotation	–	●	–	●	**2R**

Ports		
11	Tapped with UNF thread (SAE J514)	**12**
	Tapped with UNF thread (SAE J514) (A and B ports SAE split flange metric bolt holes)	**42**

Studs		
12	Without studs (no code)	

Speed sensor		
13	Without sensor (no code)	
	Sensor ready	**P0**
	Sensor without regulator	**P1**
	Sensor with regulator	**P2**

Flushing		
14	Without flushing (no code)	
	With flushing (see table on page 3)	**F1-F7**

Special order		
15	Special feature	**SOXXX**

Other		
16	Mark in text here	*

1) Not available for MCR10A

Footer from page 7

1) Ensure motor case is filled with oil prior to start-up.
2) For installation and maintenance details, please see instruction manual 15215-B.
3) For use with environmentally acceptable fluids HEES, HEPG, HETG, fluoroelastomer / Viton seals must be specified.
4) Extension of the allowable temperature range may be possible depending on specification. Please consult Bosch Rexroth Engineering Department in Glenrothes for further details.
5) Maximum values should only be applied for a small portion of the duty cycle. Please consult Bosch Rexroth Engineering. Department in Glenrothes for motor life calculations based on particular operating cases.
6) When operating motors in series, please consult Bosch Rexroth Engineering Department in Glenrothes.
7) For continuous operation at speeds <5 rpm please consult Bosch Rexroth Engineering Department in Glenrothes.
8) Based on nominal no-load Δp of 20 bar in full-displacement mode.
9) Warning! During the running in period of the motor (min. 20 hrs) it should not be run unloaded at >100 rpm.

Note

- Motor performance values are based on theoretical calculations.
- Efficiencies are not taken into consideration for theoretical calculations.
- Brake torque accounts for tolerances. Values are based when used with standard mineral oil (HLP)

Please refer the related foot notes for more details.

Technical data

Frame size			MCR3	MCR5	MCR10	MCR15				
Type of mounting			Front case flange mounting							
Pipe connections[1)2)]			Threaded per SAE J514; Flanged per SAE J518							
Shaft loading			see page 9							
Weight										
Single speed (1L)	m	kg	23	43	70	102				
Two speed (2WL)	m	kg	28	50	–	–				
Two speed (2L/2R)	m	kg		43		102				
Hydraulic fluid[3)]										
Fluid cleaniness			ISO 4406, Class 20/18/15							
Fluid viscosity range	$v_{min/max}$	mm²/s	10 to 2000							
Fluid temperature range[4)]	$\theta_{min/max}$	°C	-20 to +85							
Pressure			Low displacement				High displacement			
Operating pressure	p_{nom}	bar	250				250			
Maximum differential pressure[5)6)]	Δp_{max}	bar	450				400			
Maximum pressure at port **A** or **B**[5)6)]	p_{max}	bar	470				420			
Maximum case drain pressure	$p_{case\ max}$	bar	10				10			
Motor performance MCR3										
Displacement	V_g	cm³/rev	**160**	**225**	**255**	**280**	**325**	**365**	**400**	
Specific torque		Nm/bar	3	4	4	4	5	6	6	
Maximum torque[5)]	T_{max}	Nm	1146	1611	1826	2005	2069	2324	2546	
Minimum speed for smooth running[7)]	n_{min}	rpm	**0.5**	**0.5**	**0.5**	**0.5**	**0.5**	**0.5**	**0.5**	
Maximum speed (1L)[8)9)]	n_{max}	rpm	**670**	**475**	**420**	**385**	**330**	**295**	**270**	
Maximum speed (2WL)[8)9)]	n_{max}	rpm	**875**	**620**	**550**	**500**	**430**	**385**	**350**	
Motor performance MCR5										
Displacement	V_g	cm³/rev	380	470	520	565	620	680	750	820
Specific torque		Nm/bar	6	7	8	9	10	11	12	13
Maximum torque[5)]	T_{max}	Nm	2722	3366	3724	4047	3947	4329	4775	5220
Minimum speed for smooth running[7)]	n_{min}	rpm	0.5	0.5	0.5	0.5	0.5	0.5	0.5	0.5
Maximum speed (1L)[8)9)]	n_{max}	rpm	475	385	350	320	290	265	240	220
Maximum speed (2WL)[8)9)]	n_{max}	rpm	570	465	420	385	350	320	290	265
Motor performance MCR10										
Displacement	V_g	cm³/rev	780	860	940		1120	1250	1340	
Specific torque		Nm/bar	12	14	15		18	20	21	
Maximum torque[5)]	T_{max}	Nm	5586	6159	6732		7130	7958	8531	
Minimum speed for smooth running[7)]	n_{min}	rpm	0.5	0.5	0.5		0.5	0.5	0.5	
Maximum speed (1L and 2WL)[8)9)]	n_{max}	rpm	215	195	178		150	134	125	
Motor performance MCR15										
Displacement	V_g	cm³/rev	1130	1250	1500		1780	2150		
Specific torque		Nm/bar	18	20	24		28	34		
Maximum torque[5)]	T_{max}	Nm	8093	8952	10743		11332	13687		
Minimum speed for smooth running[7)]	n_{min}	rpm	0.5	0.5	0.5		0.5	0.5		
Maximum speed (1L and 2L/2R)[8)9)]	n_{max}	rpm	145	130	110		90	75		

Brake			MCR3	MCR5		MCR10		MCR15
Holding brake (disc brake)			**B2**	**B2**	**B4**	**B5**	**B7**	**B11**
Minimum holding torque	$t_{min/max}$	Nm	2200	2200	4400	4400	7000	11000
Release pressure (min)	$p_{rel\ min}$	bar	11	11	11	11	11	12
Release pressure (max)	$p_{rel\ max}$	bar	15	15	15	15	15	15
Maximum pressure at brake port „Z“	p_{max}	bar	40	40	40	40	40	40
Oil volume to operate brake	V_{rel}	cm³	23	23	46	17	36	77

Footer on page 6

RE 15195/07.2012, Bosch Rexroth AG

Efficiencies

▼ **Mechanical efficiency**

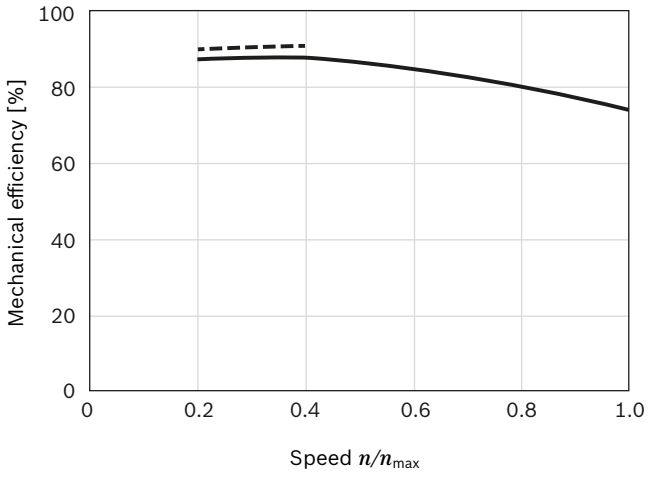

▼ **Charge pressure**

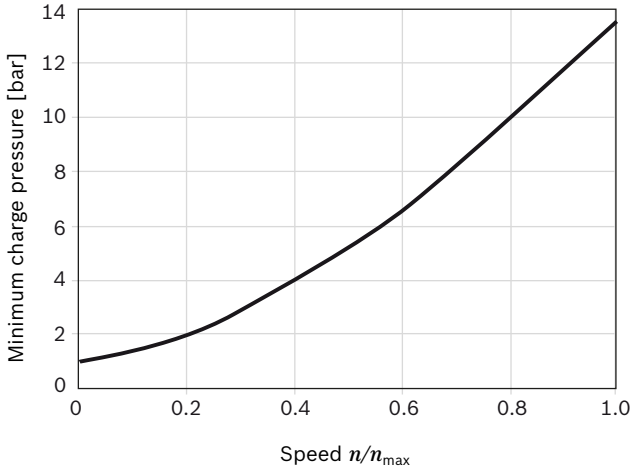

▼ **Volumetric efficiency**

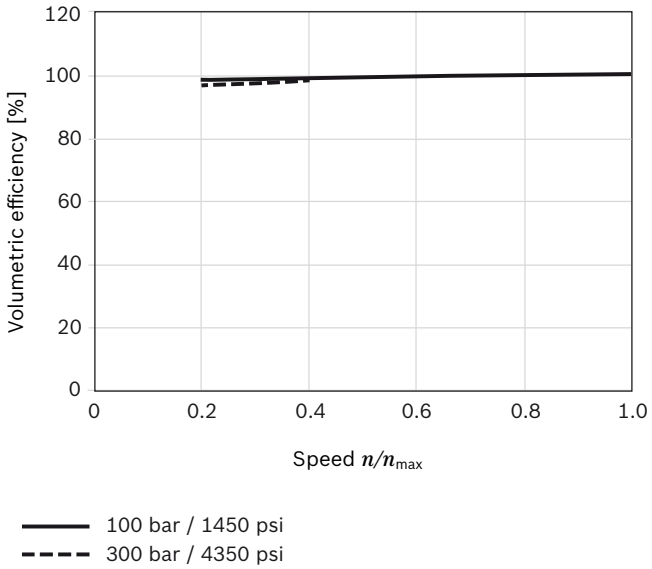

Note:

For specific performance information or operating conditions contact the Engineering Department at Bosch Rexroth, Glenrothes.

Permitted loading on drive shaft

Drive shaft ...3A A45...

Maximum radial load $F_{R\,max}$ (with axial load F_{ax} = 0)

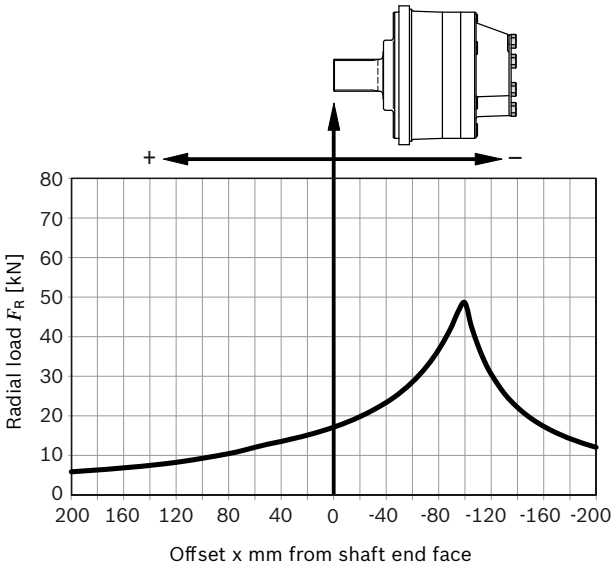

Maximum axial load $F_{ax\,max}$ (with radial load F_R = 0):

$F_{ax\,max}$ = 30700 N ← +

$F_{ax\,max}$ = 25200 N → –

Drive shaft ...10A A75...

Maximum radial load $F_{R\,max}$ (with axial load F_{ax} = 0)

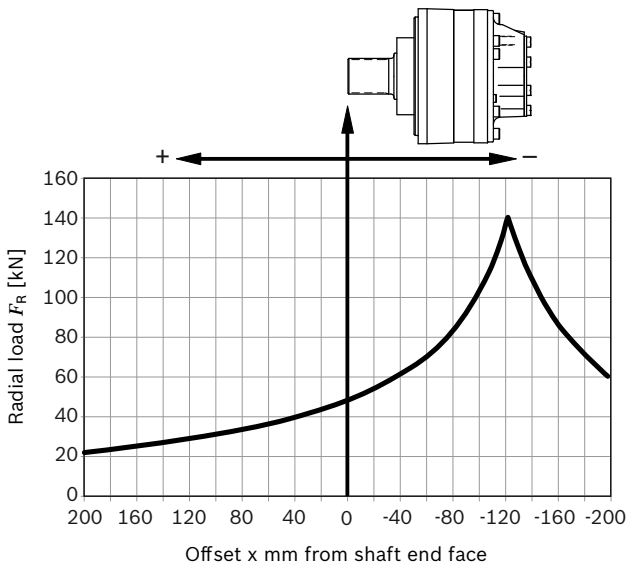

Maximum axial load $F_{ax\,max}$ (with radial load F_R = 0):

$F_{ax\,max}$ = 68000 N ← +

$F_{ax\,max}$ = 63400 N → –

Drive shaft ...5A A60...

Maximum radial load $F_{R\,max}$ (with axial load F_{ax} = 0)

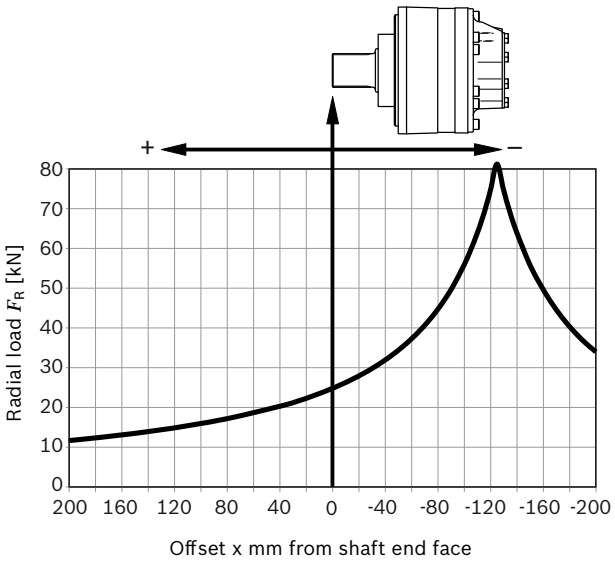

Maximum axial load $F_{ax\,max}$ (with radial load F_R = 0):

$F_{ax\,max}$ = 49000 N ← +

$F_{ax\,max}$ = 35400 N → –

Drive shaft ...15A W80...

Maximum radial load $F_{R\,max}$ (with axial load F_{ax} = 0)

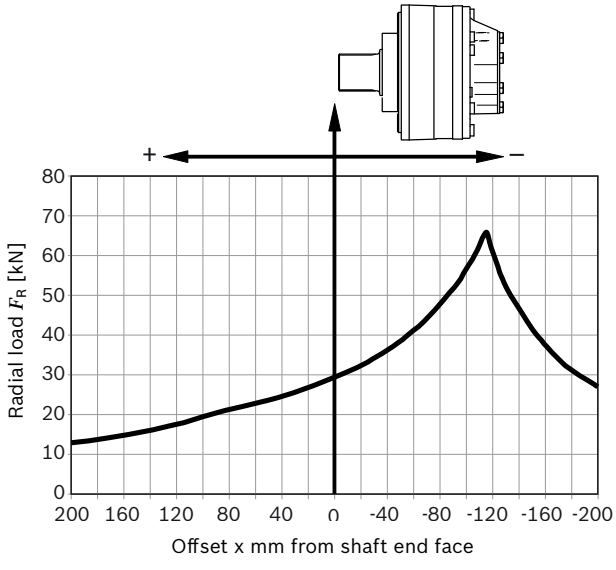

Maximum axial load $F_{ax\,max}$ (with radial load F_R = 0):

$F_{ax\,max}$ = 95400 N ← +

$F_{ax\,max}$ = 82600 N → –

Note:

- These values and graphs are for initial guidance only
- For actual motor life calculations under typical or specified duty cycles, contact Bosch Rexroth Engineering Department in Glenrothes

Dimensions

MCR-A single speed (1L)

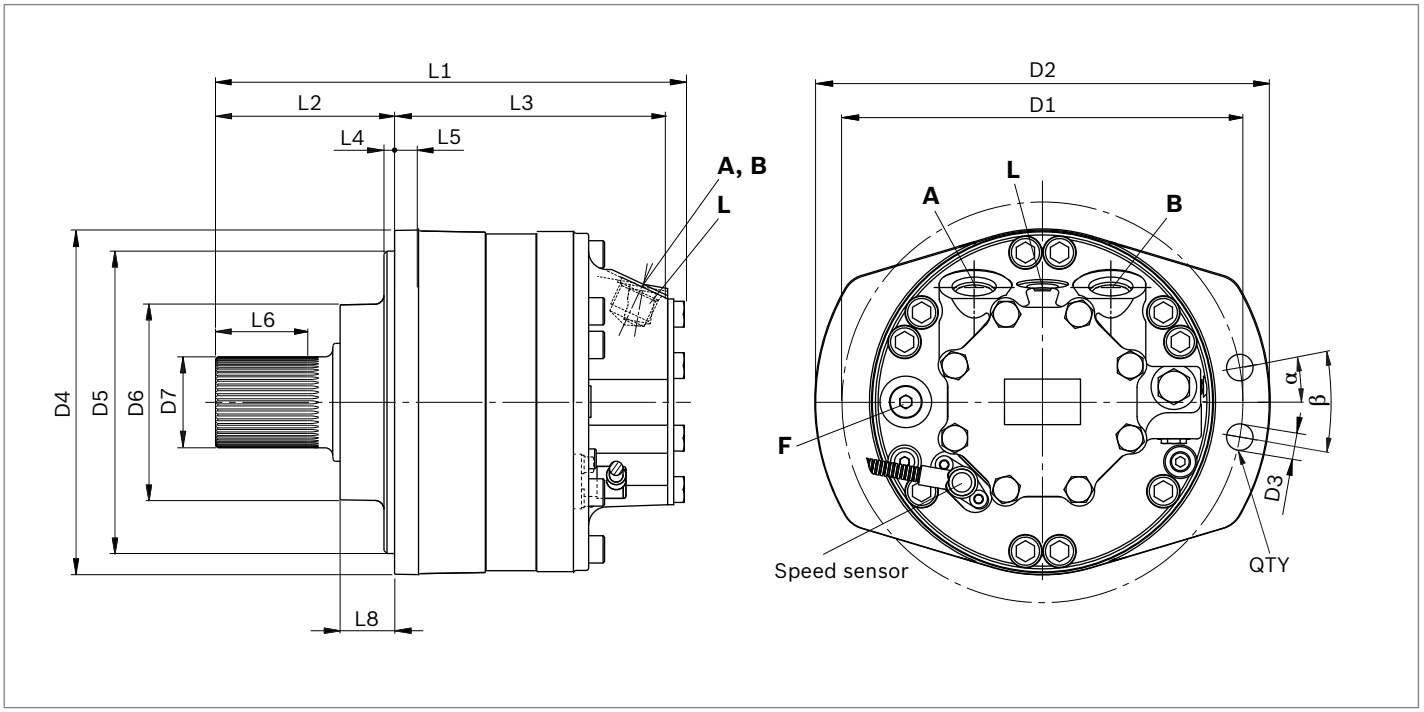

Motor	D1	D2	D3	D4	D5	D6	D7
MCR3	ø210	ø237	ø14	ø198	ø180	ø100	ø45
MCR5	ø265	ø300	ø17.5	ø228	ø200	ø131	ø60
MCR10	ø300	ø335	ø17.5	ø262	ø224	ø160	ø75
MCR15	ø335	ø375	ø22.5	ø310	ø280	ø176	ø80

Motor	L1	L2	L3	L4	L5	L6	L8	α	β	QTY
MCR3	260	93	224	6	15	54	22	0°	15°	10
MCR5	308.5	118.5	190	5	15	61	36	10°	20°	8
MCR10	352	110	242	12	25	47	32	0°	15°	10
MCR15	383.5	133	250.5	17	26	57	46	10°	20°	8

Ports

Motor	Designation	Port function	Standard	Size	p_{max} [bar]	State[2)]
MCR3	**A, B**	Inlet, outlet	SAE J514	7/8-14 UNF	470/420[1)]	O
	L	Case drain	SAE J514	9/16-18 UNF	10	O
	F	Filler port	SAE J514	3/4-16 UNF	10	X
MCR5	**A, B**	Inlet, outlet	SAE J514	1 1/16-12 UNF	470/420[1)]	O
	L	Case drain	SAE J514	3/4-16 UNF	10	O
	F	Filler port	SAE J514	3/4-16 UNF	10	X
MCR10	**A, B**	Inlet, outlet	SAE J518[3)]	3/4 in	470/420[1)]	O
	L	Case drain	SAE J514	3/4-16 UNF	10	O
	F	Filler port	SAE J514	3/4-16 UNF	10	X
MCR15	**A, B**	Inlet, outlet	SAE J518[3)]	3/4 in	470/420[1)]	O
	L	Case drain	SAE J514	3/4-16 UNF	10	O
	F	Filler port	SAE J514	3/4-16 UNF	10	X

1) Depends on nominal size
2) O = Must be connected (plugged on delivery)
   X = Plugged (in normal operation)
3) Only dimensions according to SAE J518
   (Code 62 - high pressure series)

Before finalizing your design, request a binding installation drawing.

MCR-A two speed (2WL)

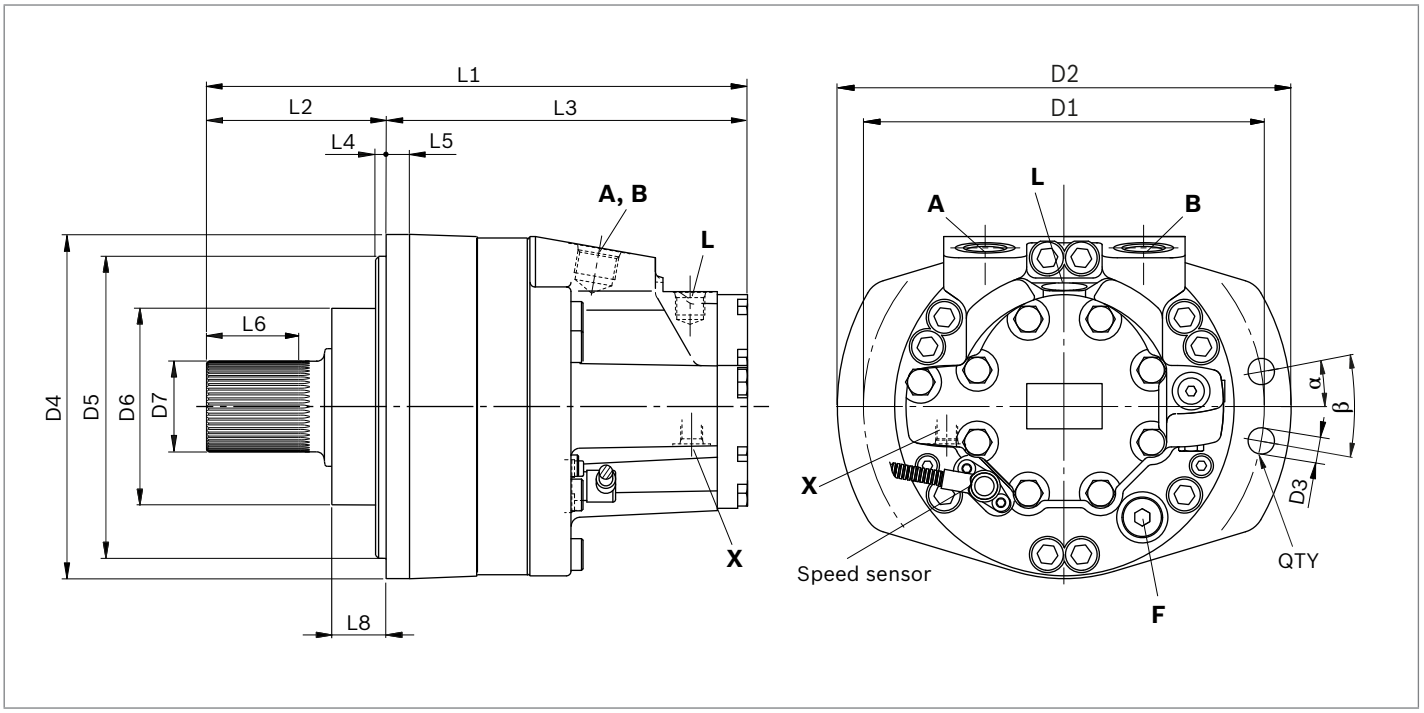

Motor	D1	D2	D3	D4	D5	D6	D7
MCR3	ø210	ø237	ø14	ø198	ø180	ø100	ø45.52
MCR5	ø265	ø300	ø17.5	ø228	ø200	ø131	ø60.2

Motor	L1	L2	L3	L4	L5	L6	L8	α	β	QTY
MCR3	219.5	93.1	226.5	6	15	53.5	22.75	0°	15°	10
MCR5	357.5	118.5	239	5	15	61	36	10°	20°	8

Ports

Motor	Designation	Port function	Code	Size	p_{max} [bar]	State[2)]
MCR3	**A, B**	Inlet, outlet	SAE J514	7/8-14 UNF	470/420[1)]	O
	L	Case drain	SAE J514	9/16-18 UNF	10	O
	F	Filler port	SAE J514	3/4-16 UNF	10	X
	X	2 speed port	SAE J514	9/16-18 UNF	35	O
MCR5	**A, B**	Inlet, outlet	SAE J514	1 1/16-12 UNF	470/420[1)]	O
	L	Case drain	SAE J514	3/4-16 UNF	10	O
	F	Filler port	SAE J514	3/4-16 UNF	10	X
	X	2 speed port	SAE J514	9/16-18 UNF	35	O

1) Depends on nominal size

2) O = Must be connected (plugged on delivery)
X = Plugged (in normal operation)

Before finalizing your design, request a binding installation drawing.

Holding brake (multi-disc brake)

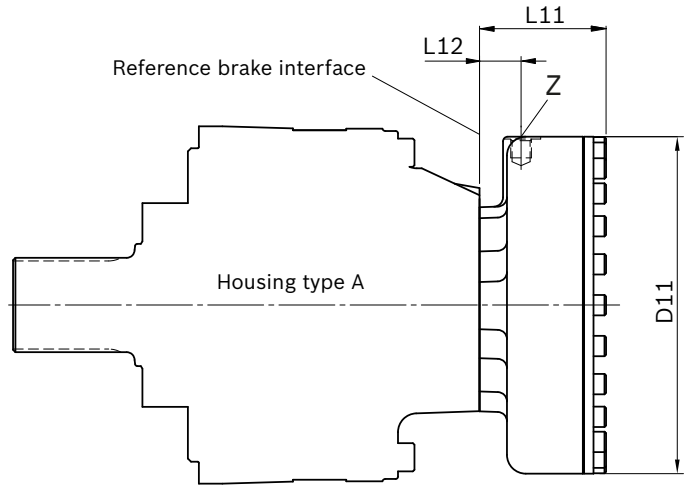

Motor	Brake	L11	L12	D11
MCR3	**B2**	67.3	22	ø174
MCR5	**B2**	67.3	22	ø174
	B4	80.7	26.5	ø215
MCR10	**B5**	84.7	26.5	ø215
	B7	97.8	29	ø251
MCR15	**B11**	102.3	33	ø282

Motor	Designation	Port function	Code	Size	p_{max} [bar]	State[1)]
MCR3	**Z**	Brake port	SAE J515	9/16-18 SAE	30	O
MCR5	**Z**	Brake port	SAE J515	9/16-18 SAE	30	O
MCR10	**Z**	Brake port	SAE J515	9/16-18 SAE	30	O
MCR15	**Z**	Brake port	SAE J515	9/16-18 SAE	30	O

1) O = Must be connected (plugged on delivery)

Before finalizing your design, request a binding installation drawing.

6

RE 15195/07.2016, Bosch Rexroth AG

751

Selection guide

Data sheet	Motor type Application		Frame size 3 160..400 cc	5 380..820 cc	6 820..920 cc	10 780..1340 cc	15 1130..2150 cc	20 1750..3000 cc
15198	**MCR-F** Wheel drives		●	●	–	●	●	–
15200	**MCR-W** Heavy duty wheel drives		●	●	–	●	–	–
15195	**MCR-A** Frame integrated drives		●	●	–	●	●	–
15199	**MCR-H** Integrated drives		●	●	–	●	●	●
15221	**MCR-T** Track drives		–	●	●	●	–	–
15223	**MCR-R Series 41** Hydraulic drive assist		–	–	–	●	–	–
15214	**MCR-X** Slew drives		●	●	–	–	–	–
15197	**MCR-C** Compact drives		–	–	–	–	–	●
15196	**MCR-D** Industrial applications		●	●	–	●	–	–
	MCR-E Industrial applications		–	●	–	–	–	–

Radial piston motor for compact drives
MCR-C

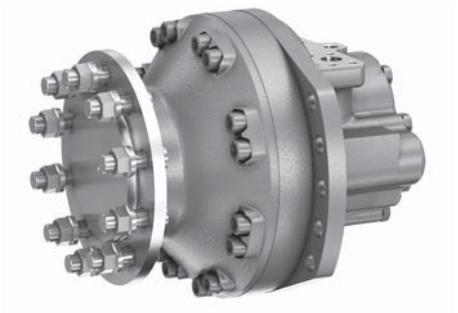

- Frame size MCR20
- Displacement 1750 cc to 3000 cc
- Differential pressure up to 450 bar
- Torque output up to 19099 Nm
- Speed up to 125 rpm
- Open and closed circuits

Features

- Compact robust construction
- High volumetric and mechanical efficiencies
- Rear case mount
- Wheel flange with wheel studs
- High reliability
- Low maintenance
- Smooth running at very low speeds
- Low noise
- Bi-directional
- Sealed tapered roller bearings
- Freewheeling possible
- Available with:
  - Holding brake (multi-disc)
  - Bi-directional two speed
  - Integrated flushing valve
  - Speed sensor

Contents

Functional description	2
Ordering code	5
Technical data	7
Efficiencies	8
Permitted loading on drive shaft	9
Dimensions	10
Selection guide	14

6

RE 15197/02.2010, Bosch Rexroth AG

Functional description

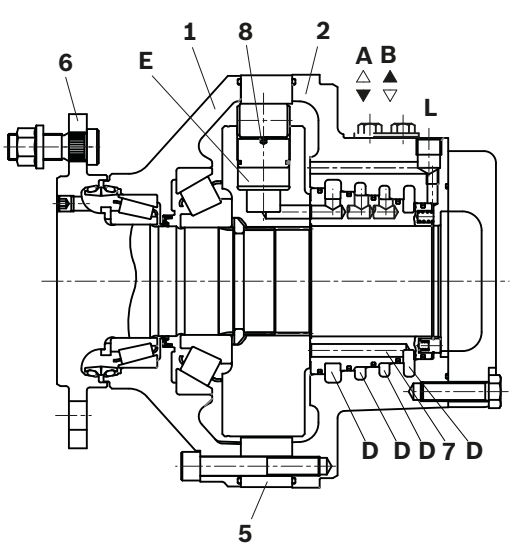

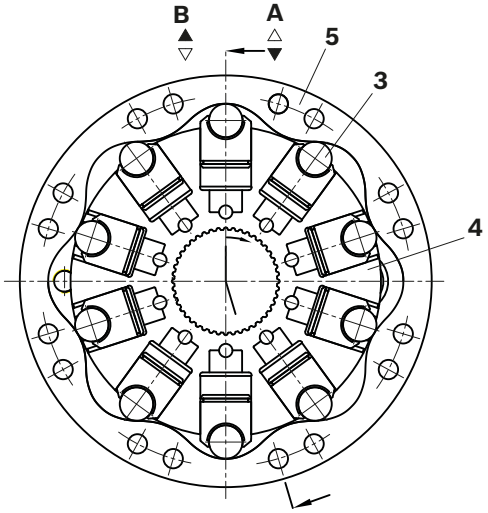

Hydraulic motors of the type MCR-C are radial piston motors with rear case mounting and flanged drive shaft. These motors have a compact front housing and are intended for drives in open or closed circuits. These motors are used in a wide range of applications where there is lower external loading. The integrated flange with wheel studs allows easy installation of standard wheel rims.

Construction

Two part housing (**1, 2**), rotary group (**3**, **4, 8**), cam (**5**), drive shaft (**6**) and flow distributor (**7**).

Transmission

The cylinder block (**4**) is connected to the shaft (**6**) by means of splines. The pistons (**8**) are arranged radially in the cylinder block (**4**) and make contact with the cam (**5**) via rollers (**3**).

Torque generation

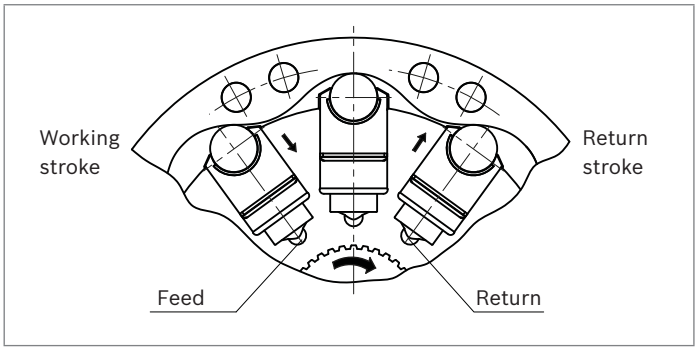

The number of working and return strokes corresponds to the number of lobes on the cam multiplied by number of pistons in the cylinder block.

Flow paths

The ports **A** and **B**, which are located in the rear case, carry oil through the distributor to the cylinder chambers (**E**).

Bearings

Tapered roller bearings capable of transmitting high axial and radial forces are fitted as standard.

Freewheeling

In certain applications there may be a requirement to freewheel the motor. This may be achieved by connecting ports **A** and **B** to zero pressure and simultaneously applying a pressure of 2 bar to the housing through port **L**. In this condition, the pistons are forced into the cylinder block which forces the rollers to lose contact with the cam thus allowing free rotation of the shaft.

Two speed operation (2W)

In mobile applications where vehicles are required to operate at high speed with low motor loads, the motor can be switched to a low-torque and high-speed mode. This is achieved by operating an integrated valve which directs hydraulic fluid to only one half of the motor while continuously re-circulating the fluid in the other half. This “reduced displacement” mode reduces the flow required for a given speed and gives the potential for cost and efficiency improvements. The motor maximum speed remains unchanged.

Bosch Rexroth has developed a special spool valve to allow smooth switching to reduced displacement whilst on the move. This is known as “soft-shift” and is a standard feature of 2W motors. The spool valve requires either an additional sequence valve or electro-proportional control to operate in “soft-shift” mode.

▼ **Schematic**

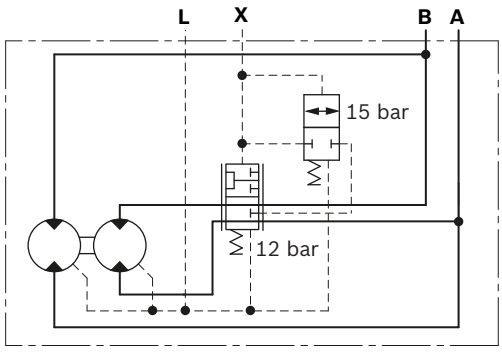

Flushing valve

In a closed circuit, the same hydraulic fluid continuously flows between the pump and the motor. This could therefore lead to overheating of the hydraulic fluid.

The function of the flushing valve option is to replace hydraulic fluid in the closed circuit with that from the reservoir. When the hydraulic motor is operated under load, either in the clockwise or counter-clockwise direction, the flushing valve opens and takes a fixed flow of fluid through an orifice from the low pressure side of the circuit. This flow is then fed to the motor housing and back to the reservoir normally via a cooler. In order to charge the low pressure side of the circuit, cool fluid is drawn from the reservoir by the boost pump and is fed to the pump inlet through the check valve. Thus the flushing valve ensures a continuous renewal and cooling of the hydraulic fluid. The flushing feature incorporates a relief valve which is used to maintain a minimum boost pressure and operates at a standard setting of 14 bar (other options available on request).

Different orifice sizes may be used to select varying flows of flushing fluid. The following table gives flushing rate values based on a boost / charge pressure of 25 bar.

▼ **Schematic**

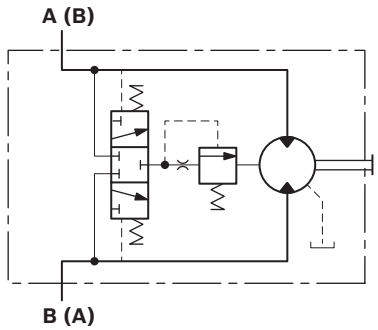

Flushing flow rates

Flushing code	Orifice size (mm)	Flow (l/min) at 25 bar[1)] min	max
F1	Ø1	2.2	2.7
F2	Ø1.5	5.0	6.1
F7	Ø1.7	6.4	7.8
F4	Ø2	8.2	10.7
F6	Ø2.3	8.8	11.4

1) 0.6 mm Shim (Standard), Cracking pressure = 11±3 bar

Holding brake (multi-disc brake)

Mounting
By way of rear housing (**2**) and brake shaft (**14**).

Brake application
As a safety requirement in mobile applications a parking brake may be provided to ensure that the motor cannot turn when the machine is not in use. The parking brake provides holding torque by means of discs (**11**) that are compressed by a disc spring (**10**). The brake is released when oil pressure is applied to brake port "**Z**" and the pressure in the annular area (**9**) compresses the disc spring using brake piston (**12**) thus allowing the brake discs (**11**) to turn independently.

Note
This brake is provided solely for static use - not to be used dynamically.

▼ **Schematic diagrams**

Motor without brake	Motor with holding brake
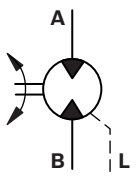	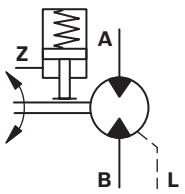

Manual release of holding brake
The brake may also be released manually by loosening screws (**13**).

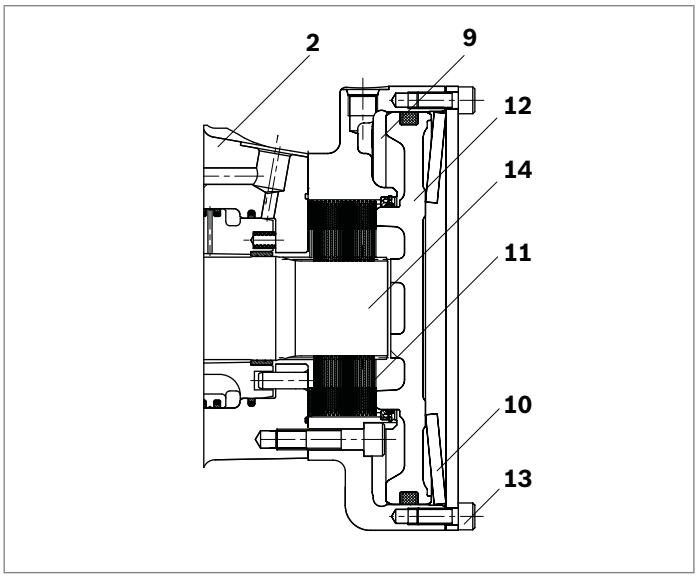

Speed sensor
A Hall-effect speed sensor (**16**) may be fitted as an option, giving a two-channel output of phase-displaced square waves, and enabling detection of speed and direction. A toothed target disc (**17**) is fitted to the motor cylinder block (**4**), and the sensor, fitted to a port in the rear case, produces a pulse on each channel as each tooth passes in front of it. The frequency of the pulses is proportional to the rotational speed.
Versions are available for use with regulated supplies 10 V (Code P1) and for direct connection to a 12 V or 24 V unregulated supply (Code P2).
The motor can also be supplied fitted with a target disc and with a speed sensor port machined, but covered and sealed with a blanking plate (Code P0). These "sensor-ready" motors may be fitted with a sensor at a later date.

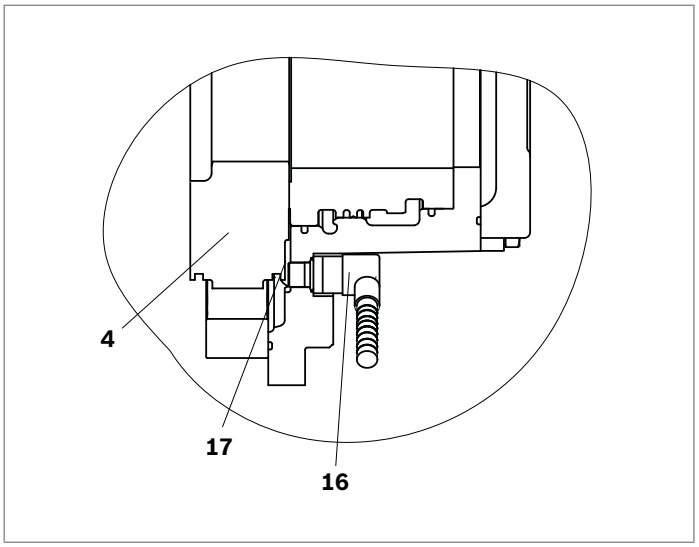

Direction of shaft rotation with flow
(viewed from drive shaft)

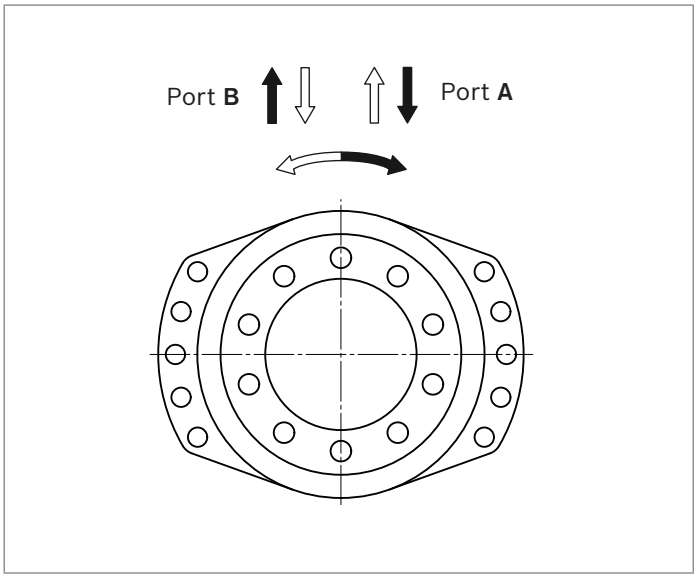

Ordering code

01	02	03	04	05	06		07	08	09	10	11	12	13	14	15	16
MCR	**20**	**C**		**F280**	**Z**	**/**	**33**				**42**					

Radial piston motor

01	Radial-piston type, low-speed, high-torque motor	**MCR**

Frame size

02	Frame size 20	**20**

Housing type

03	Short front case – rear case mounting flange	**C**

Nominal size, displacement V_g in cm^3/rev

			1750	2100	2500	3000
04	Frame size 20					
	Low displacement: motors use standard cylindrical pistons	LD	●	●	–	–
	High displacement: motors use stepped pistons	HD	–	–	●	●

Drive shaft

05	With flange ø280 mm	**F280**

Rear shaft

06	Without rear shaft	**Z**

Series

07	Series 33	**33**[1)]

Brake

08	Without brake	**A0**
	Hydraulic release spring applied multi-disc holding brake 19000 Nm	**B19**

Seals

09	NBR (nitrile rubber)	**M**
	FKM (fluoroelastomer / Viton)	**V**

Single/two-speed operation

10	Single speed, standard direction of rotation	**1L**
	Bi-directional two speed, standard direction of rotation	**2WL**

Ports

11	Tapped with UNF thread (SAE J514) (A and B ports SAE split flange metric bolt holes)	**42**

Studs

12	Without studs (no code)	
	With wheel studs and nuts	**S**
	With twice normal number of wheel studs and nuts	**SS**

Speed sensor

13	Without sensor (no code)	
	Sensor ready	**P0**
	Sensor without regulator	**P1**
	Sensor with regulator	**P2**

● = Available – = Not available

[1)] This data sheet also applies to series 32.

Ordering code

01	02	03	04	05	06		07	08	09	10	11	12	13	14	15	16
MCR	**20**	**C**		**F280**	**Z**	**/**	**33**				**42**					

Flushing

14	Without flushing (no code)	
	With flushing (see table on page 3)	**F1-F7**

Special order

15	Special feature	**SOXXX**

Other

16	Mark in text here	*

Footer from page 7

1) Ensure motor case is filled with oil prior to start-up.
2) For installation and maintenance details, please see instruction manual 15215-B.
3) For use with environmentally acceptable fluids HEES, HEPG, HETG, fluoroelastomer / Viton seals must be specified.
4) Extension of the allowable temperature range may be possible depending on specification. Please consult Bosch Rexroth Engineering Department in Glenrothes for further details.
5) Maximum values should only be applied for a small portion of the duty cycle. Please consult Bosch Rexroth Engineering Department in Glenrothes for motor life calculations based on particular operating cases.
6) When operating motors in series, please consult Bosch Rexroth Engineering Department in Glenrothes.
7) For continuous operation at speeds <5 rpm please consult Bosch Rexroth Engineering Department in Glenrothes.
8) Based on nominal no-load Δp of 20 bar in full-displacement mode.
9) Warning! During the running in period of the motor (min. 20 hrs) it should not be run unloaded at >100 rpm.
10) Guide values for up to 5000 hours of motor operation (ISO VG46 at 50 °C).

Note

- Motor performance values are based on theoretical calculations.
- Efficiencies are not taken into consideration for theoretical calculations.
- Brake torque accounts for tolerances. Values are based when used with standard mineral oil (HLP)

Please refer the related foot notes for more details.

Technical data

Frame size			MCR20			
Type of mounting			Flange mounting			
Pipe connections[1)2)]			Threaded per SAE J514; Flanged per SAE J518			
Shaft loading			see page 9			
Weight						
Single speed (1L)	m	kg	121			
Two speed (2WL)	m	kg	121			
Hydraulic fluid[3)]						
Fluid cleaniness			ISO 4406, Class 20/18/15			
Fluid viscosity range	$v_{min/max}$	mm²/s	10 to 2000			
Fluid temperature range[4)]	$\theta_{min/max}$	°C	-20 to +85			
Pressure			Low displacement		High displacement	
Operating pressure	p_{nom}	bar	250		250	
Maximum differential pressure[5)6)]	Δp_{max}	bar	450		400	
Maximum pressure at port **A** or **B**[5)6)]	p_{max}	bar	470		420	
Maximum case drain pressure	$p_{case\ max}$	bar	10		10	
Motor performance						
Displacement	V_g	cm³/rev	1750	2100	2500	3000
Specific torque		Nm/bar	28	33	40	44
Maximum torque[5)]	T_{max}	Nm	12533	15040	15915	19099
Minimum speed for smooth running[7)]	n_{min}	rpm	0.5	0.5	0.5	0.5
Maximum speed (1L and 2WL)[8)9)]	n_{max}	rpm	125	125	115	115
Continuous operating power[10)]	P	kW	117.29	103.12	94.18	93.01

			MCR20
Holding brake (disc brake)			**B19**
Minimum holding torque	$t_{min/max}$	Nm	19000
Release pressure (min)	$p_{rel\ min}$	bar	15
Release pressure (max)	$p_{rel\ max}$	bar	30
Maximum pressure at brake port „Z“	p_{max}	bar	40
Oil volume to operate brake	V_{rel}	cm³	99

Efficiencies

▼ **Mechanical efficiency**

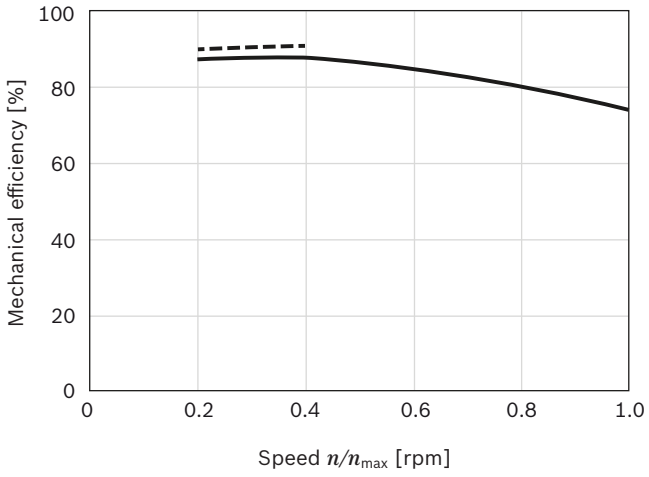

▼ **Charge pressure**

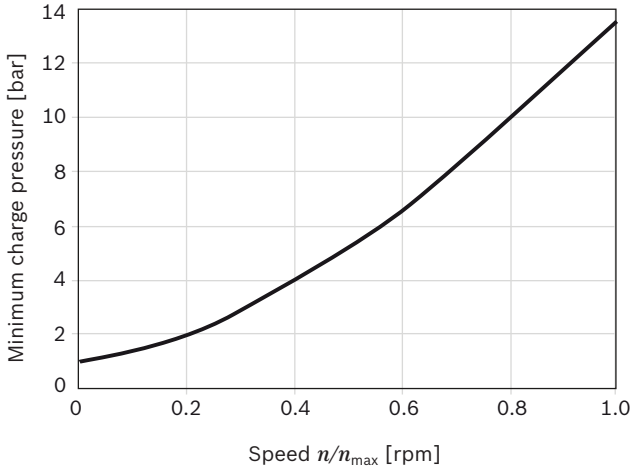

▼ **Volumetric efficiency**

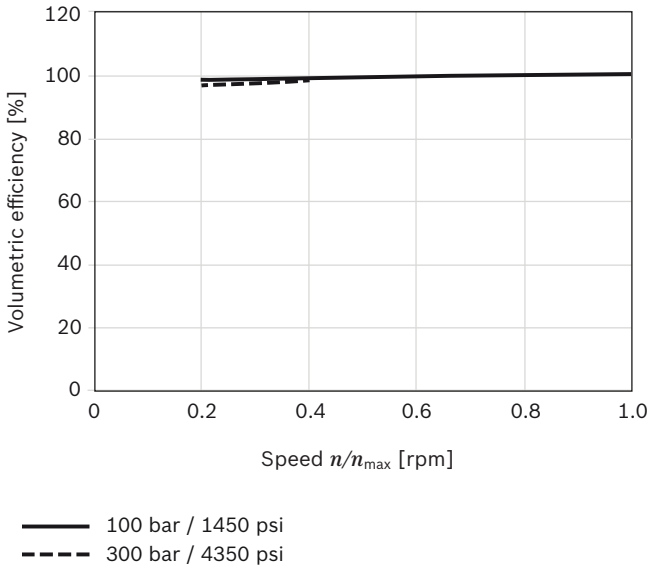

Note:

For specific performance information or operating conditions contact the Engineering Department at Bosch Rexroth, Glenrothes.

Permitted loading on drive shaft

Drive shaft ...20C F280...

Maximum radial load $F_{R\,max}$ (with axial load F_{ax} = 0)

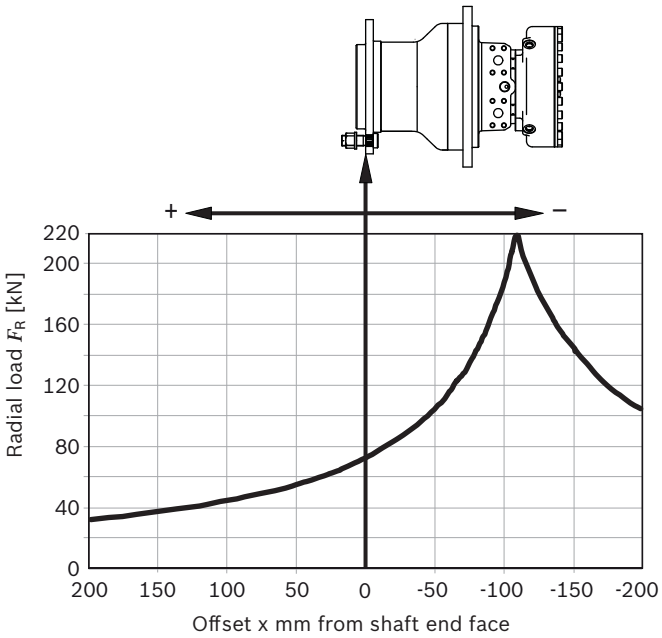

Maximum axial load $F_{ax\,max}$ (with radial load F_R = 0):

$F_{ax\,max}$ = 113000 N ← +

$F_{ax\,max}$ = 49500 N → –

Note:

- These values and graphs are for initial guidance only
- For actual motor life calculations under typical or specified duty cycles, contact Bosch Rexroth Engineering Department in Glenrothes

6

Dimensions

MCR-C single speed (1L)

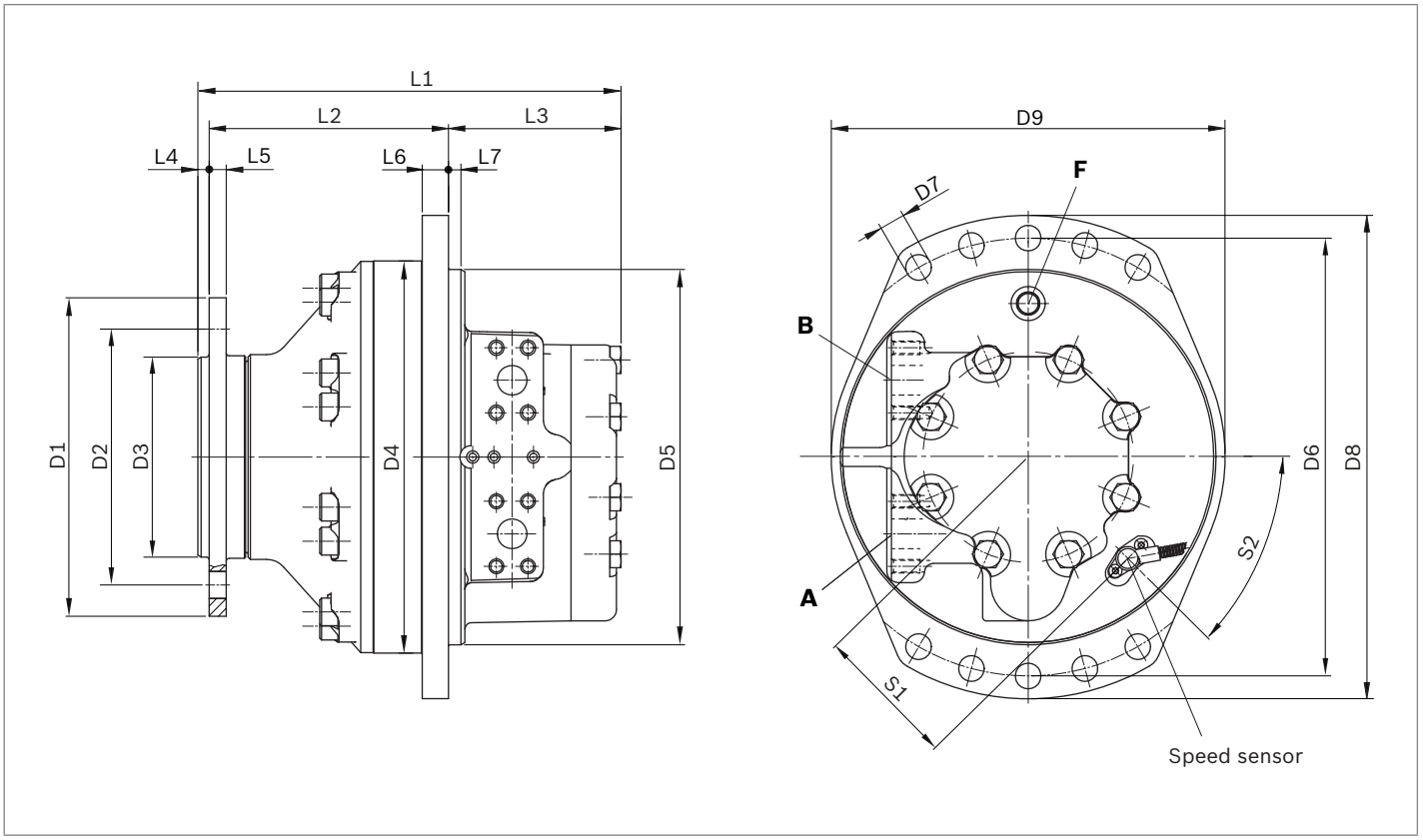

Motor	D1	D2	D3	D4	D5	D6	D7	D8	D9
MCR20	ø280	ø225	ø175.8	ø345	ø330	ø385	ø22.5	ø425	ø345

Motor	L1	L2	L3	L4	L5	L6	L7	S1	S2
MCR20	371.75	210	151.65	10	15	23	11	125	45°

Before finalizing your design, request a binding installation drawing.
Dimensions in mm.

Ports

Motor	Designation	Port function	Code	Size	p_{max} [bar]	State[2]
MCR20	A, B	Inlet, outlet	SAE J518[3]	1 in	470/420[1]	O
	L	Case drain	SAE J514	3/4-16 UNF	10	O
	F	Filler port	SAE J514	3/4-16 UNF	10	X

1) Depends on nominal size
2) O = Must be connected (plugged on delivery)
X = Plugged (in normal operation)
3) Dimensions according to SAE J518 (Code 62 - high pressure series)

MCR-C two speed (2WL)

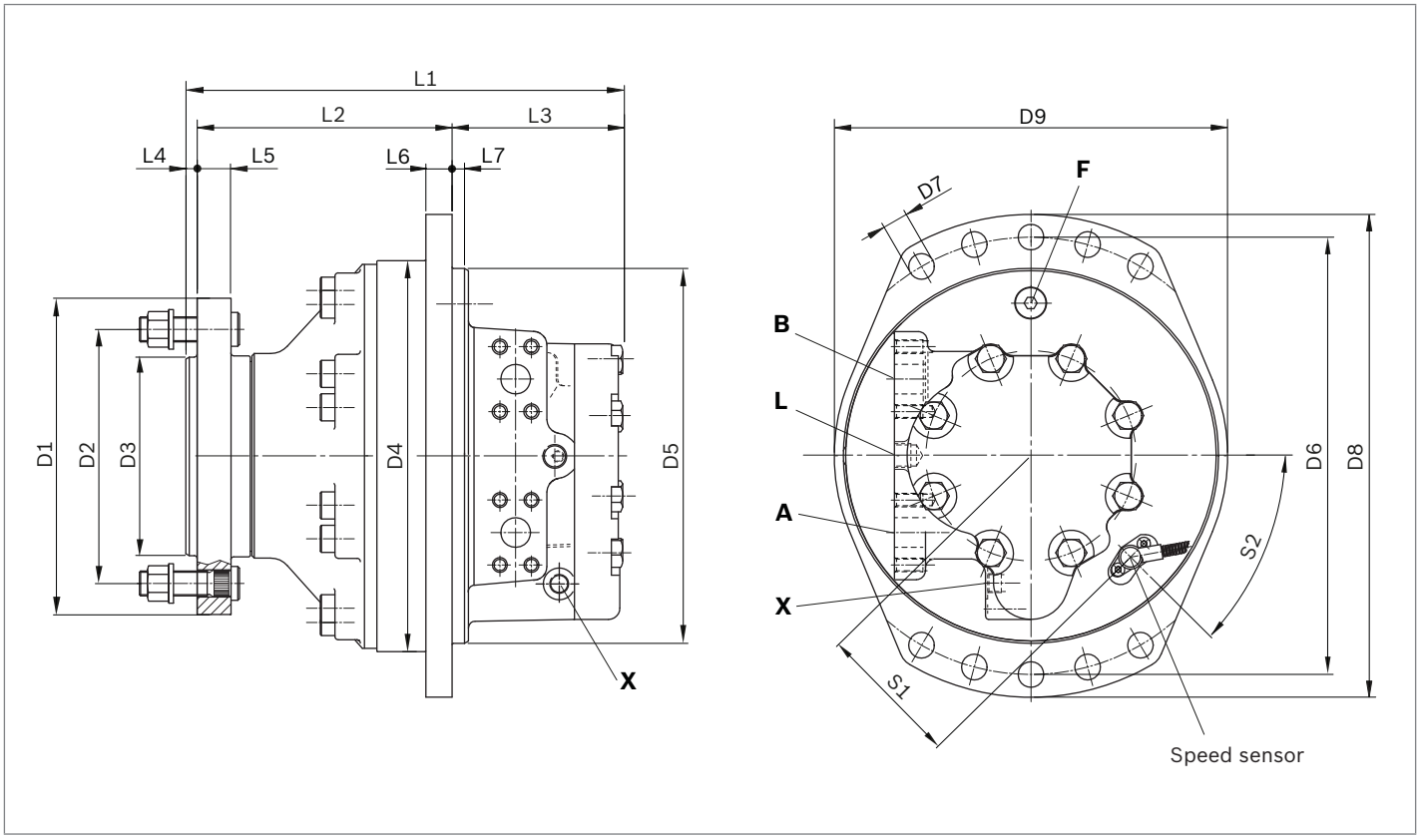

Motor	D1	D2	D3	D4	D5	D6	D7	D8	D9
MCR20	ø280	ø225	ø175.8	ø345	ø330	ø385	ø22.5	ø425	ø345

Motor	L1	L2	L3	L4	L5	L6	L7	S1	S2
MCR20	386.65	225	151.65	10	30	23	11	125	45°

Before finalizing your design, request a binding installation drawing.
Dimensions in mm.

Ports

Motor	Designation	Port function	Code	Size	p_{max} [bar]	State[2)]
MCR20	A, B	Inlet, outlet	SAE J518[3)]	1 in	470/420[1)]	O
	L	Case drain	SAE J514	3/4-16 UNF	10	O
	F	Filler port	SAE J514	3/4-16 UNF	10	X
	X	2 speed port	SAE J514	9/16-18 UNF	35	O

1) Depends on nominal size
2) O = Must be connected (plugged on delivery)
X = Plugged (in normal operation)
3) Dimensions according to SAE J518 (Code 62 - high pressure series)

Dimensions

Holding brake (multi-disc brake)

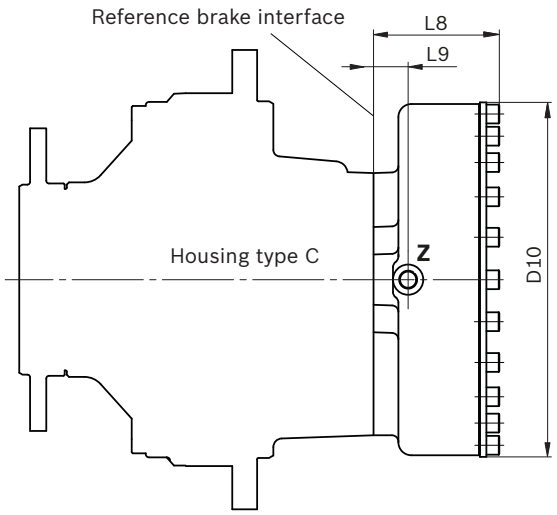

Motor	Brake	L8	L9	D10
MCR20	**B19**	116.3	32	ø328

Ports

Motor	Designation	Port function	Code	Size	p_{max} [bar]	State
MCR20	Z	Brake Port	SAE J515	9/16-18 SAE	40	O

1) O = Must be connected (plugged on delivery)

Before finalizing your design, request a binding installation drawing.
Dimensions in mm.

B_15_97_12_2012_Bosch_Rexroth_AG

Selection guide

Data sheet	Motor type Application		Frame size 3 160..400 cc	5 380..820 cc	6 820..920 cc	10 780..1340 cc	15 1130..2150 cc	20 1750..3000 cc
15198	**MCR-F** Wheel drives		●	●	–	●	●	–
15200	**MCR-W** Heavy duty wheel drives		●	●	–	●	–	–
15195	**MCR-A** Frame integrated drives		●	●	–	●	–	–
15199	**MCR-H** Integrated drives		●	●	–	●	●	●
15221	**MCR-T** Track drives		–	●	●	●	–	–
15223	**MCR-R Series 40** Hydraulic drive assist		–	–	–	●	–	–
15214	**MCR-X** Slew drives		●	●	–	–	–	–
15197	**MCR-C** Compact drives		–	–	–	–	–	●
15196	**MCR-D** Industrial applications		●	●	–	●	–	–
	MCR-E Industrial applications		–	●	–	–	–	–

Radial piston motor for wheel drives
MCR-F

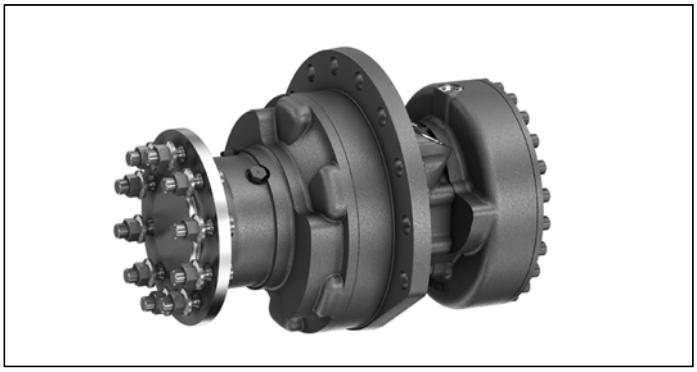

- Frame size MCR3, MCR5, MCR10, MCR15 (for frame size 20 see MCR20-C)
- Displacement 160 cc to 2150 cc
- Differential pressure up to 450 bar
- Torque output up to 13687 Nm
- Speed up to 875 rpm
- Open and closed circuits

Features

- Compact robust construction
- High volumetric and mechanical efficiencies
- Rear case mount
- Wheel flange with wheel studs
- High reliability
- Low maintenance
- Smooth running at very low speeds
- Low noise
- Bi-directional
- Sealed tapered roller bearings
- High radial forces permitted on drive shaft
- Freewheeling possible
- Available with:
  - Holding brake (multi-disc) or dynamic (drum) brake
  - Bi-directional two speed
  - Integrated flushing valve
  - Speed sensor

Contents

Functional description	2
Ordering code	6
Technical data	8
Efficiencies	10
Permitted loading on drive shaft	11
Dimensions	13
Selection guide	20

RE 15 980/07.2015, Bosch Rexroth AG

Functional description

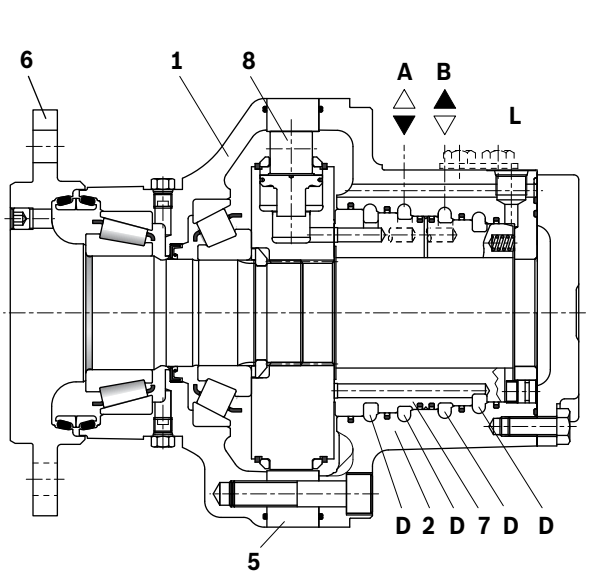

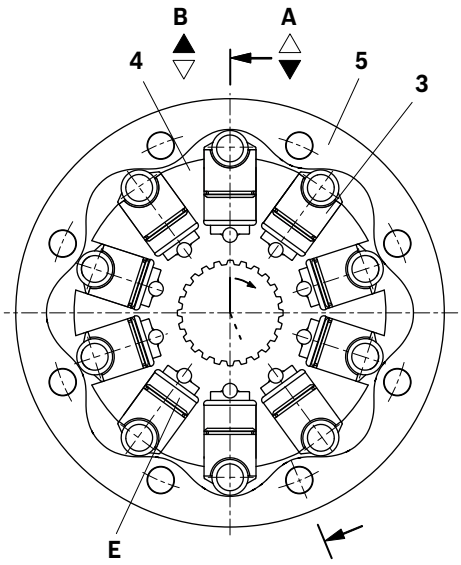

Hydraulic motors of the type MCR-F are radial piston motors with rear case mounting and flange shaft. The MCR-F motors are intended for wheel drives in open or closed circuits. These motors are used in a wide range of applications such as municipal vehicles, fork lift trucks, agricultural and forestry machines. The integrated flange with wheel studs allows easy installation of standard wheel rims.

Construction
Two part housing (**1**, **2**), rotary group (**3**, **4, 8**), cam (**5**), drive shaft (**6**) and flow distributor (**7**)

Transmission
The cylinder block (**4**) is connected to the shaft (**6**) by means of splines. The pistons (**3**) are arranged radially in the cylinder block (**4**) and make contact with the cam (**5**) via rollers (**8**).

Torque generation

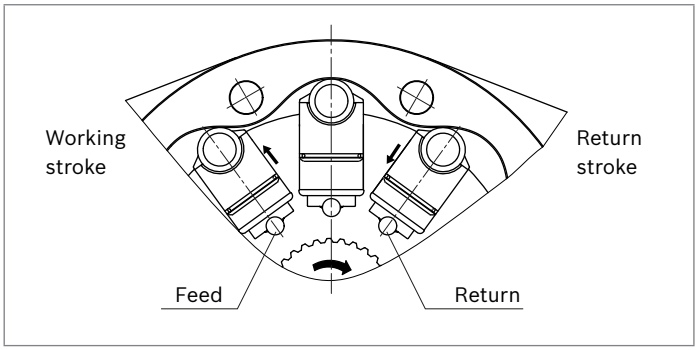

The number of working and return strokes corresponds to the number of lobes on the cam multiplied by number of pistons in the cylinder block.

Flow paths
The ports **A** and **B**, which are located in the rear case, carry oil through the distributor to the cylinder chambers (**E**).

Bearings
Tapered roller bearings capable of transmitting high axial and radial forces are fitted as standard.

Freewheeling
In certain applications there may be a requirement to free-wheel the motor. This may be achieved by connecting ports **A** and **B** to zero pressure and simultaneously applying a pressure of 2 bar to the housing through port **L**. In this condition, the pistons are forced into the cylinder block which forces the rollers to lose contact with the cam thus allowing free rotation of the shaft.

Two speed operation (2W)

In mobile applications where vehicles are required to operate at high speed with low motor loads, the motor can be switched to a low-torque and high-speed mode. This is achieved by operating an integrated valve which directs hydraulic fluid to only one half of the motor while continuously re-circulating the fluid in the other half. This “reduced displacement” mode reduces the flow required for a given speed and gives the potential for cost and efficiency improvements. The motor maximum speed remains unchanged.

Bosch Rexroth has developed a special spool valve to allow smooth switching to reduced displacement whilst on the move. This is known as “soft-shift” and is a standard feature of 2W motors. The spool valve requires either an additional sequence valve or electro-proportional control to operate in “soft-shift” mode.

▼ **Schematic**

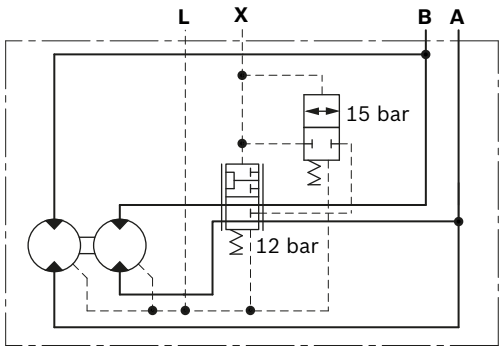

Flushing valve

In a closed circuit, the same hydraulic fluid continuously flows between the pump and the motor. This could therefore lead to overheating of the hydraulic fluid.

The function of the flushing valve option is to replace hydraulic fluid in the closed circuit with that from the reservoir. When the hydraulic motor is operated under load, either in the clockwise or anti-clockwise direction, the flushing valve opens and takes a fixed flow of fluid through an orifice from the low pressure side of the circuit. This flow is then fed to the motor housing and back to the reservoir normally via a cooler. In order to charge the low pressure side of the circuit, cool fluid is drawn from the reservoir by the boost pump and is fed to the pump inlet through the check valve. Thus the flushing valve ensures a continuous renewal and cooling of the hydraulic fluid. The flushing feature incorporates a relief valve which is used to maintain a minimum boost pressure and operates at a standard setting of 14 bar (other options available on request).

Different orifice sizes may be used to select varying flows of flushing fluid. The following table gives flushing rate values based on a boost/charge pressure of 25 bar.

▼ **Schematic**

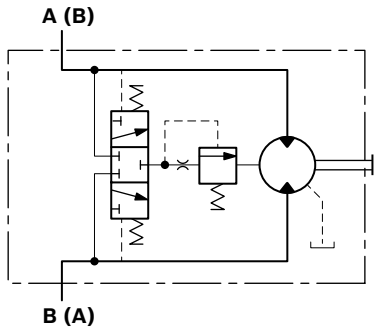

Flushing flow rates

Flushing code	Orifice size (mm)	Flow (l/min) at 25 bar[1)] min	max
F1	Ø1	2.2	2.7
F2	Ø1.5	5.0	6.1
F7	Ø1.7	6.4	7.8
F4	Ø2	8.2	10.7
F6	Ø2.3	8.8	11.4

1) 0.6 mm Shim (Standard), Cracking pressure = 11±3 bar

Holding brake (multi-disc brake)

Mounting

By way of rear housing (**2**) and brake shaft (**14**).

Brake application

As a safety requirement in mobile applications a parking brake may be provided to ensure that the motor cannot turn when the machine is not in use. The parking brake provides holding torque by means of discs (**11**) that are compressed by a disc spring (**10**). The brake is released when oil pressure is applied to brake port “**Z**” and the pressure in the annular area (**9**) compresses the disc spring using brake piston (**12**) thus allowing the brake discs (**11**) to turn independently.

Note
This brake is provided solely for static use - not to be used dynamically.

▼ **Schematic diagrams**

Motor without brake	Motor with holding brake	Motor with dynamic brake
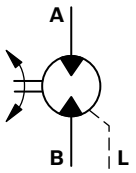	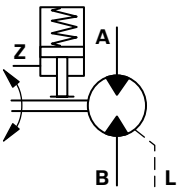	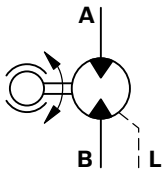

Manual release of holding brake

The brake may also be released manually by loosening screws (**13**).

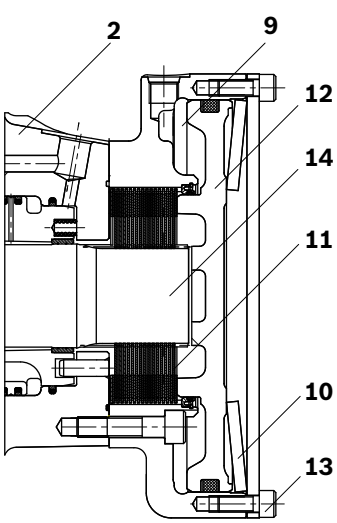

Dynamic brake

Where mechanical dynamic braking is required, a drum brake may be specified. The drum brake is mounted directly onto the drive shaft (**6**) and front housing (**1**). Braking torque is provided by brake shoes acting on the inside of the drum.
The drum brake can also provide mechanical park brake function by use of bowden cable.

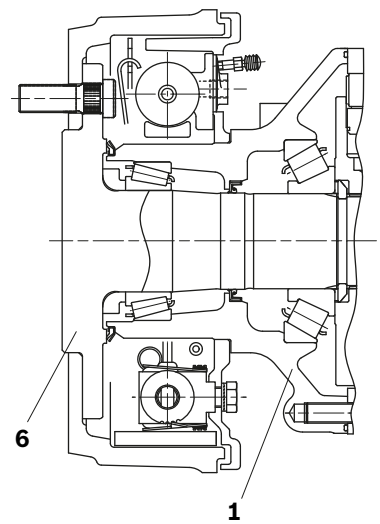

Speed sensor

A Hall-effect speed sensor (**16**) may be fitted as an option, giving a two-channel output of phase-displaced square waves, and enabling detection of speed and direction. A toothed target disc (**17**) is fitted to the motor cylinder block (**4**), and the sensor, fitted to a port in the rear case, produces a pulse on each channel as each tooth passes in front of it. The frequency of the pulses is proportional to the rotational speed.

Versions are available for use with regulated supplies 10 V (Code P1) and for direct connection to a 12 V or 24 V unregulated supply (Code P2).

The motor can also be supplied fitted with a target disc and with a speed sensor port machined, but covered and sealed with a blanking plate (Code P0). These “sensor-ready” motors may be fitted with a sensor at a later date.

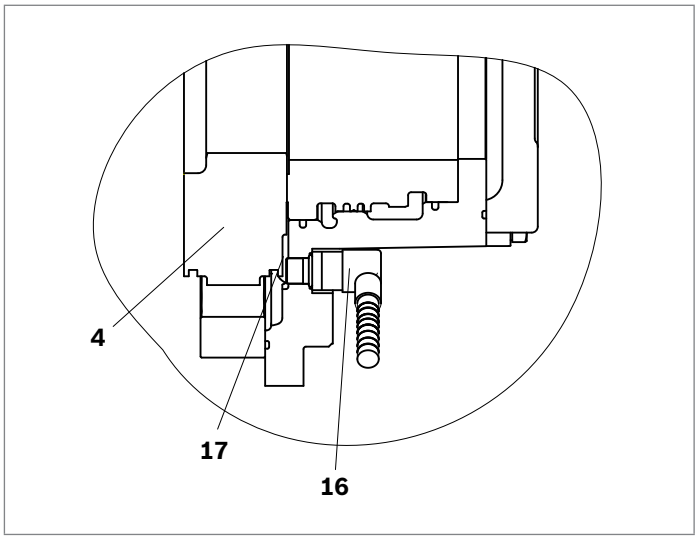

Direction of shaft rotation with flow

(viewed from drive shaft)

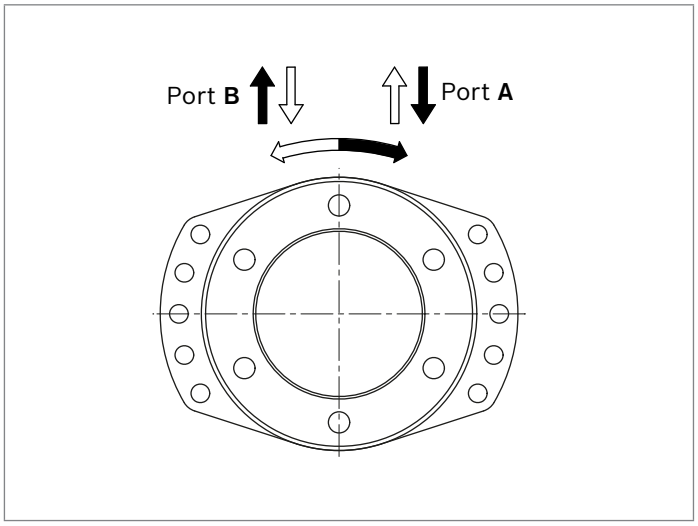

Ordering code

01	02	03	04	05	06		07	08	09	10	11	12	13	14	15	16
MCR		**F**			**Z**	**/**										

Radial piston motor

01	Radial-piston type, low-speed, high-torque motor	**MCR**

Frame size

02	Frame size	3	**3**
		5	**5**
		10	**10**
		15	**15**

Housing type

03	Rear case mounting flange	**F**

Nominal size, displacement V_g in cm^3/rev

04	Frame size 3		**160**	**225**	**255**	**280**	**325**	**365**	**400**	
	Low displacement: motors use standard cylindrical pistons	LD	●	●	●	●	–	–	–	
	High displacement: motors use stepped pistons	HD	–	–	–	–	●	●	●	
	Frame size 5		**380**	**470**	**520**	**565**	**620**	**680**	**750**	**820**
	Low displacement: motors use standard cylindrical pistons	LD	●	●	●	●	–	–	–	–
	High displacement: motors use stepped pistons	HD	–	–	–	–	●	●	●	●
	Frame size 10		**780**	**860**	**940**	**1120**	**1250**	**1340**		
	Low displacement: motors use standard cylindrical pistons	LD	●	●	●	–	–	–		
	High displacement: motors use stepped pistons	HD	–	–	–	●	●	●		
	Frame size 15		**1130**	**1250**	**1500**	**1780**	**2150**			
	Low displacement: motors use standard cylindrical pistons	LD	●	●	●	–	–			
	High displacement: motors use stepped pistons	HD	–	–	–	●	●			

Drive shaft

		MCR3	**MCR5**	**MCR10**	**MCR15**	
05	With flange ø180 mm	●	●	–	–	**F180**
	With flange ø250 mm	–	●	●	–	**F250**
	With flange ø280 mm	–	–	–	●	**F280**

Rear shaft

06	Without rear shaft	**Z**

Series

07	Series 32	**32**
	Series 33	**33**

Brake

			MCR3	**MCR5**	**MCR10**	**MCR15**	
08	Without brake		●	●	●	●	**A0**
	Hydraulic release spring applied multi-disc holding brake	2200 Nm	●	●	–	–	**B2**
		4400 Nm	–	●	–	–	**B4**
		4400 Nm	–	–	●	–	**B5**
		7000 Nm	–	–	●	–	**B7**
		11000 Nm	–	–	–	●	**B11**
	Dynamic brake (drum-brake) with maximum torque	2900 Nm	●	–	–	–	**C2L/R**
		4000 Nm	–	●	–	–	**C4L/R**
		6400 Nm	–	–	●	–	**C7L/R**
		12000 Nm	–	–	–	●	**C12L/R**

● = Available – = Not available

01	02	03	04	05	06		07	08	09	10	11	12	13	14	15	16
MCR		**F**			**Z**	**/**										

Seals

09	NBR (nitrile rubber)	**M**
	FKM (fluoroelastomer / Viton)	**V**

Single/two-speed operation		**MCR3**	**MCR5**	**MCR10**	**MCR15**	
10	Single speed, standard direction of rotation	●	●	●	●	**1L**
	Bi-directional two speed, standard direction of rotation	●	●	●	–	**2WL**
	Switchable two speed, anti-clockwise direction of rotation	–	–	–	●	**2L**
	Switchable two speed, clockwise directon of rotation	–	–	–	●	**2R**

Ports		**MCR3**	**MCR5**	**MCR10**	**MCR15**	
11	Tapped with UNF thread (SAE J514)	●	●	–	–	**12**
	Tapped with UNF thread (SAE J514) (A and B ports SAE split flange metric bolt holes)	–	–	●	●	**42**

Studs

12	Without studs (no code)	
	With wheel studs and nuts	**S**
	With twice the normal number of wheel studs and nuts	**SS**

Speed sensor

13	Without sensor (no code)	
	Sensor ready	**P0**
	Sensor without regulator	**P1**
	Sensor with regulator	**P2**

Flushing

14	Without flushing (no code)	
	With flushing (see table on page 3)	**F1-F7**

Special order

15	Special feature	**SOXXX**

Other

16	Mark in text here	*

RE 15098/07.2012, Bosch Rexroth AG

Technical data

Frame size			MCR3	MCR5	MCR10	MCR15				
Type of mounting			Flange mounting							
Pipe connections[1)2)]			Threaded per SAE J514; Flanged per SAE J518							
Shaft loading			see page 11							
Weight										
Single speed (1L)	m	kg	21	38	65	95				
Two speed (2WL, 2L and 2R)	m	kg	26	46	70	95				
Hydraulic fluid[3)]										
Fluid cleaniness			ISO 4406, Class 20/18/15							
Fluid viscosity range	$\nu_{min/max}$	mm²/s	10 to 2000							
Fluid temperature range[4)]	$\theta_{min/max}$	°C	-20 to +85							
Pressure			Low displacement				High displacement			
Operating pressure	p_{nom}	bar	250				250			
Maximum differential pressure[5)6)]	Δp_{max}	bar	450				400			
Maximum pressure at port **A** or **B**[5)6)]	p_{max}	bar	470				420			
Maximum case drain pressure	$p_{case\ max}$	bar	10				10			
Motor performance MCR3										
Displacement	V_g	cm³/rev	160	225	255	280	325	365	400	
Specific torque		Nm/bar	3	4	4	4	5	6	6	
Maximum torque[5)]	T_{max}	Nm	1146	1611	1826	2005	2069	2324	2546	
Minimum speed for smooth running[7)]	n_{min}	rpm	0.5	0.5	0.5	0.5	0.5	0.5	0.5	
Maximum speed (1L)[8)9)]	n_{max}	rpm	670	475	420	385	330	295	270	
Maximum speed (2WL)[8)9)]	n_{max}	rpm	875	620	550	500	430	385	350	
Motor performance MCR5										
Displacement	V_g	cm³/rev	380	470	520	565	620	680	750	820
Specific torque		Nm/bar	6	7	8	9	10	11	12	13
Maximum torque[5)]	T_{max}	Nm	2722	3366	3724	4047	3947	4329	4775	5220
Minimum speed for smooth running[7)]	n_{min}	rpm	0.5	0.5	0.5	0.5	0.5	0.5	0.5	0.5
Maximum speed (1L)[8)9)]	n_{max}	rpm	475	385	350	320	290	265	240	220
Maximum speed (2WL)[8)9)]	n_{max}	rpm	570	465	420	385	350	320	290	265
Motor performance MCR10										
Displacement	V_g	cm³/rev	780	860	940		1120	1250	1340	
Specific torque		Nm/bar	12	14	15		18	20	21	
Maximum torque[5)]	T_{max}	Nm	5586	6159	6732		7130	7958	8531	
Minimum speed for smooth running[7)]	n_{min}	rpm	0.5	0.5	0.5		0.5	0.5	0.5	
Maximum speed (1L and 2WL)[8)9)]	n_{max}	rpm	215	195	178		150	135	125	
Motor performance MCR15										
Displacement	V_g	cm³/rev	1130	1250	1500		1780	2150		
Specific torque		Nm/bar	18	20	24		28	34		
Maximum torque[5)]	T_{max}	Nm	8093	8952	10743		11332	13687		
Minimum speed for smooth running[7)]	n_{min}	rpm	0.5	0.5	0.5		0.5	0.5		
Maximum speed (1L, 2L and 2R)[8)9)]	n_{max}	rpm	145	130	110		90	75		

			MCR3		MCR5		MCR10		MCR15	
Holding brake (disc brake)			B2		B2	B4	B5	B7	B11	
Minimum holding torque	$t_{min/max}$	Nm	2200		2200	4400	4400	7000	11000	
Release pressure (min)	$p_{rel\ min}$	bar	11		11	11	11	11	12	
Release pressure (max)	$p_{rel\ max}$	bar	15		15	15	15	15	15	
Maximum pressure at brake port „**Z**“	p_{max}	bar	40		40	40	40	40	40	
Oil volume to operate brake	V_{rel}	cm^3	23		23	46	17	36	77	
			MCR3		**MCR5**		**MCR10**		**MCR15**	
Dynamic brake			**C2L/R**		**C4L/R**		**C7L/R**		**C12L/R**	
Braking torque	$t_{min/max}$	Nm	2000	2900	3000	4000	4700	6400	9000	12000
Brake cable tension		N	1000	1440	1270	1661	1755	2400	2580	3460
Brake port pressure	p_{max}	bar	82	117	73	97	89	120	84	112
Brake cylinder operating volume	V	cm^3	7	7	9	9	13	13	24.91	24.91

Note

- Motor performance values are based on theoretical calculations.
- Efficiencies are not taken into consideration for theoretical calculations.
- Brake torque accounts for tolerances. Values are based when used with standard mineral oil (HLP).
- For MCR20 frame size, please refer MCR-C data sheet (15197).

Please refer the related foot notes for more details.

Footer from page 8 and 9

1) Ensure motor case is filled with oil prior to start-up. See instruction manual 15215-B.
2) For installation and maintenance details, please see instruction manual 15215-B.
3) For use with environmentally acceptable fluids HEES, HEPG, HETG, fluoroelastomer / Viton seals must be specified.
4) Extension of the allowable temperature range may be possible depending on specification. Please consult Bosch Rexroth Engineering Department in Glenrothes for further details.
5) Maximum values should only be applied for a small portion of the duty cycle. Please consult Bosch Rexroth Engineering. Department in Glenrothes for motor life calculations based on particular operating cases.
6) When operating motors in series, please consult Bosch Rexroth Engineering Department in Glenrothes.
7) For continuous operation at speeds <5 rpm please consult Bosch Rexroth Engineering Department in Glenrothes.
8) Based on nominal no-load Δp of 20 bar in full-displacement mode.
9) Warning! During the running in period of the motor (min. 20 hrs) it should not be run unloaded at >100 rpm.

Efficiencies

▼ **Mechanical efficiency**

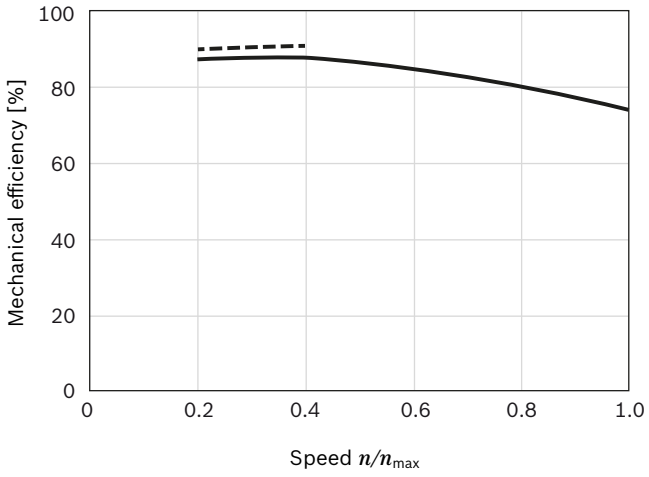

▼ **Charge pressure**

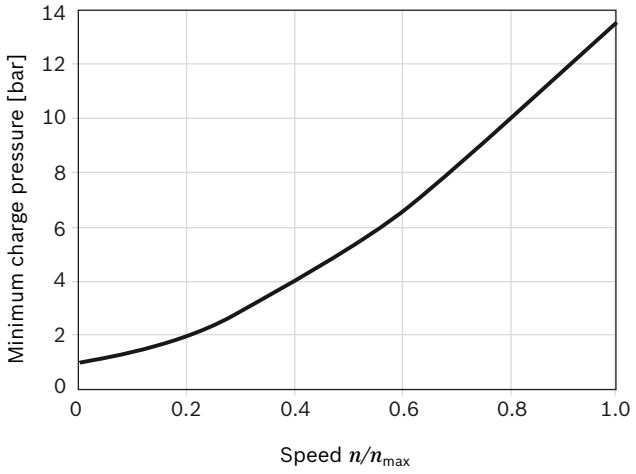

▼ **Volumetric efficiency**

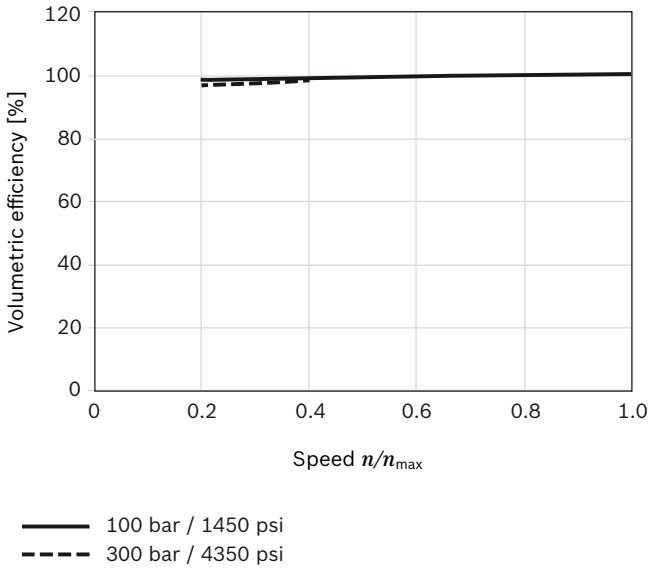

Note:

For specific performance information or operating conditions contact the Engineering Department at Bosch Rexroth, Glenrothes.

Permitted loading on drive shaft

Drive shaft ...3F F180...

Maximum radial load $F_{R\,max}$ (with axial load F_{ax} = 0)

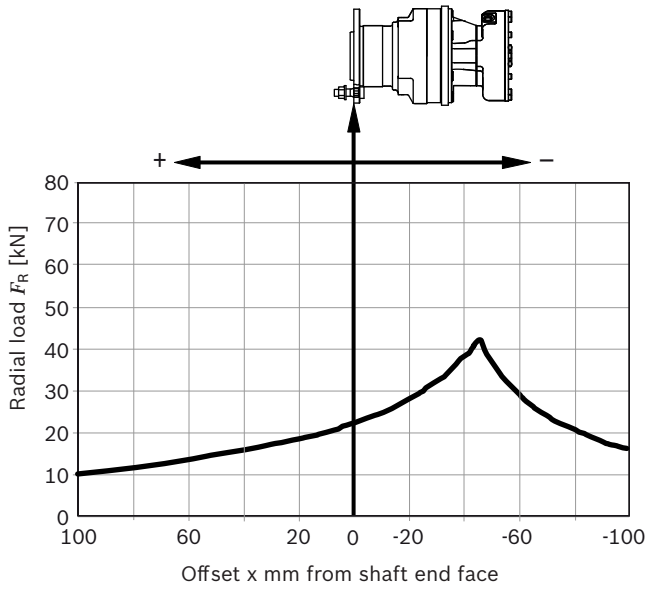

Maximum axial load $F_{ax\,max}$ (with radial load F_R = 0):

$F_{ax\,max}$ = 18300 N ← +

$F_{ax\,max}$ = 28000 N → –

Drive shaft ...5F F250...

Maximum radial load $F_{R\,max}$ (with axial load F_{ax} = 0)

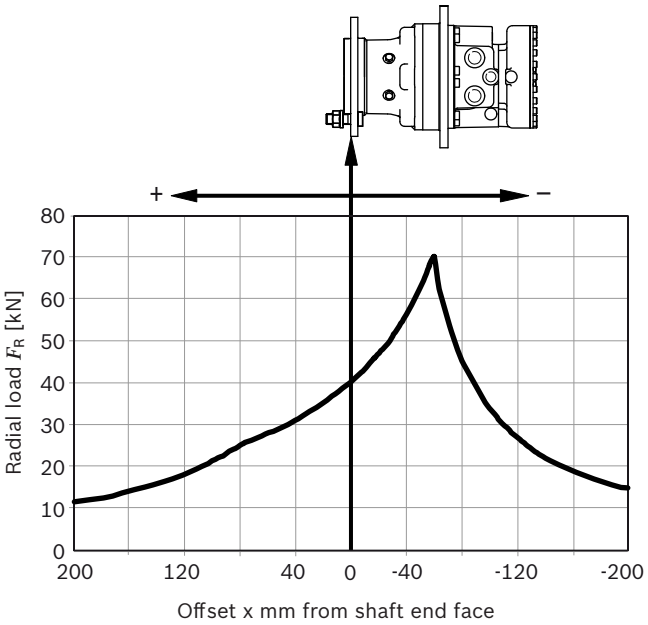

Maximum axial load $F_{ax\,max}$ (with radial load F_R = 0):

$F_{ax\,max}$ = 37500 N ← +

$F_{ax\,max}$ = 36800 N → –

Drive shaft ...5F F180...

Maximum radial load $F_{R\,max}$ (with axial load F_{ax} = 0)

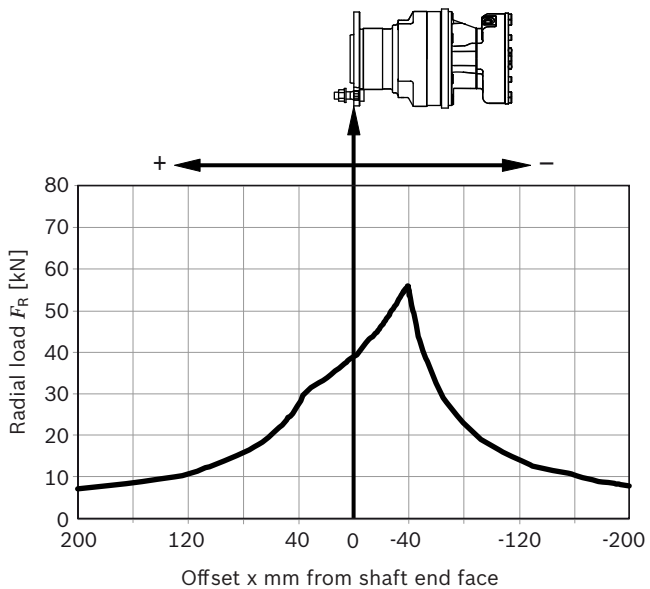

Maximum axial load $F_{ax\,max}$ (with radial load F_R = 0):

$F_{ax\,max}$ = 37500 N ← +

$F_{ax\,max}$ = 36800 N → –

Drive shaft ...10F F250...

Maximum radial load $F_{R\,max}$ (with axial load F_{ax} = 0)

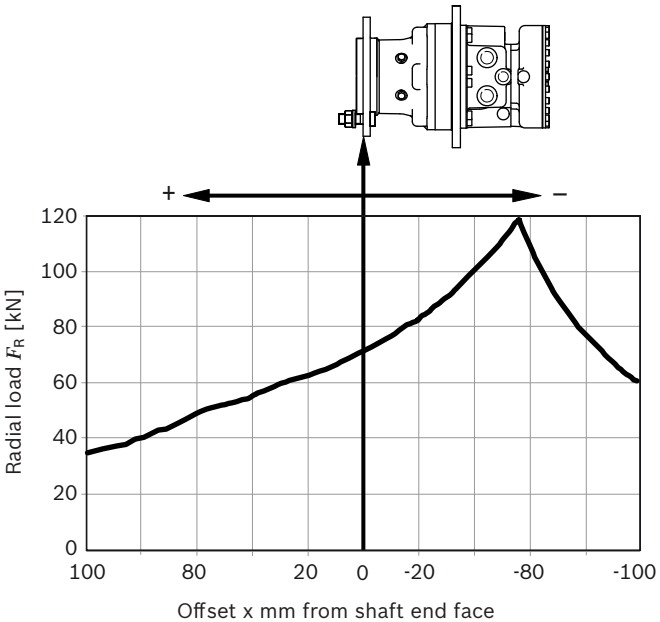

Maximum axial load $F_{ax\,max}$ (with radial load F_R = 0):

$F_{ax\,max}$ = 76100 N ← +

$F_{ax\,max}$ = 67400 N → –

6

RE 15198/07.2010, Bosch Rexroth AG

777

Permitted loading on drive shaft

Drive shaft ...15F F280...

Maximum radial load $F_{R\ max}$ (with axial load F_{ax} = 0)

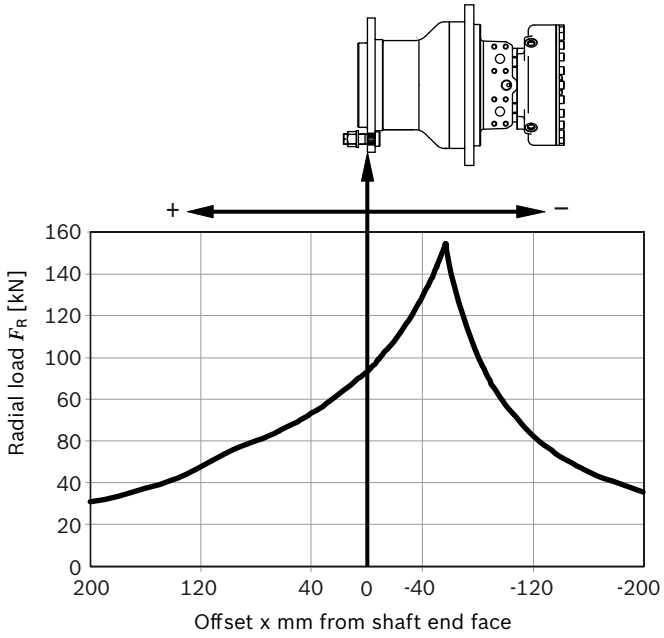

Maximum axial load $F_{ax\ max}$ (with radial load F_R = 0):

$F_{ax\ max}$ = 95400 N ← +

$F_{ax\ max}$ = 88700 N → −

Note:

- These values and graphs are for initial guidance only
- For actual motor life calculations under typical or specified duty cycles, contact Bosch Rexroth Engineering Department in Glenrothes
- For drum braked motors, the permitted loading varies depending on the offset.

Dimensions

MCR3F, MCR10F and MCR15F single speed (1L)

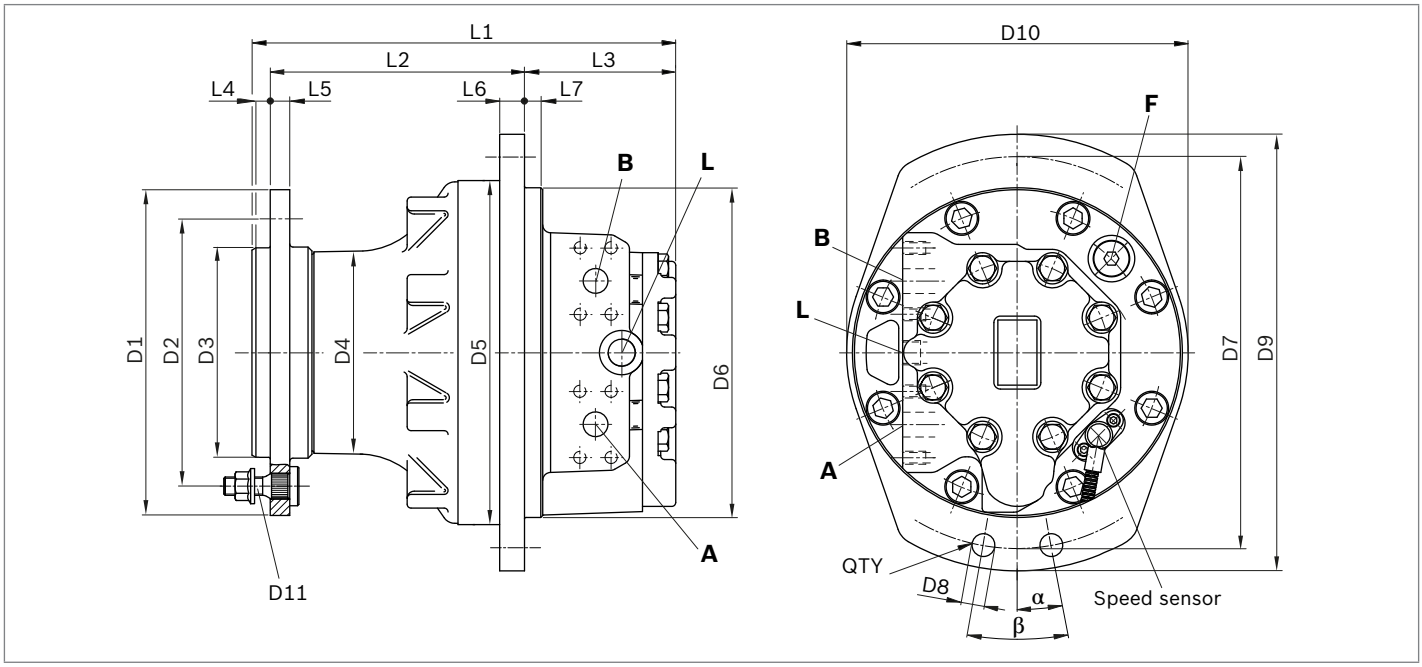

MCR5F single speed (1L)

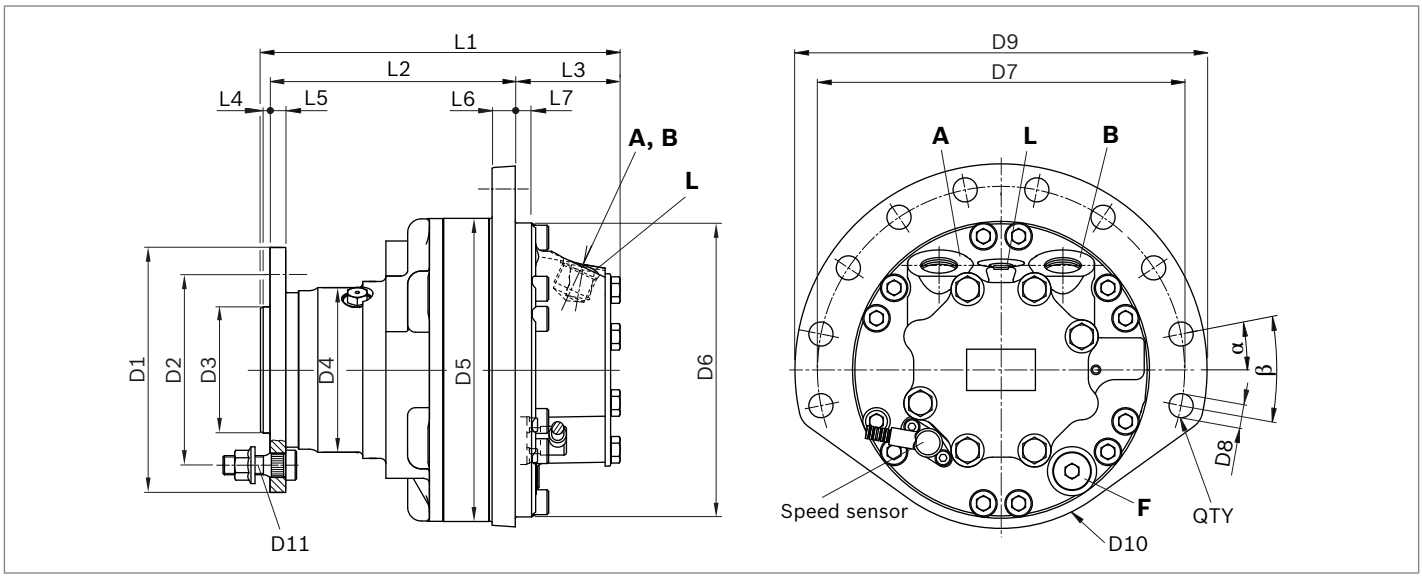

Motor	D1	D2	D3	D4	D5	D6	D7	D8	D9	D10	D11
MCR3	ø172.5	ø140	ø92.8	–	ø180	ø180	ø210	ø14	ø237	ø190	5xM14x1.5
MCR5	ø180	ø140	ø92.7	ø116.5	ø223	ø215.95	ø267	ø17.4	ø298	ø228	8xM20x1.5
MCR10	ø250	ø205	ø160	ø162	ø264	ø253	ø300	ø17.5	ø335	ø264	10xM22x1.5
MCR15	ø280	ø225	ø175.8	ø190	ø304	ø285	ø335	ø17.4	ø375	–	10x18Mx1.5

Motor	L1	L2	L3	L4	L5	L6	L7	α	β	QTY
MCR3	217.5	143.5	67	6	12	13	6	0°	15°	10
MCR5	264.1	180	77	5	11.5	17	12	11.25°	22.5°	10
MCR10	325	195	116	14	15	19	12.5	0°	15°	10
MCR15	334.4	219.4	98.9	15	16	36.5	9	10°	20°	8

Before finalizing your design, request a binding installation drawing.
Dimensions in mm.

Ports

Motor	Designation	Port function	Code	Size	p_{max} [bar]	State[2)]
MCR3	**A, B**	Inlet, outlet	SAE J514	7/8-14 UNF	470/420[1)]	O
	L	Case drain	SAE J514	9/16-18 UNF	10	O
	F	Filler port	SAE J514	3/4-16 UNF	10	X
MCR5	**A, B**	Inlet, outlet	SAE J514	1 1/16-12 UNF	470/420[1)]	O
	L	Case drain	SAE J514	3/4-16 UNF	10	O
	F	Filler port	SAE J514	3/4-16 UNF	10	X
MCR10	**A, B**	Inlet, outlet	SAE J518[3)]	3/4 in	470/420[1)]	O
	L	Case drain	SAE J514	3/4-16 UNF	10	O
	F	Filler port	SAE J514	3/4-16 UNF	10	X
MCR15	**A, B**	Inlet, outlet	SAE J518[3)]	3/4 in	470/420[1)]	O
	L	Case drain	SAE J514	3/4-16 UNF	10	O
	F	Filler port	SAE J514	3/4-16 UNF	10	X

1) Depends on nominal size
2) O = Must be connected (plugged on delivery)
X = Plugged (in normal operation)
3) Dimensions according to SAE J518 (Code 62 - high pressure series)

MCR3F, MCR10F and MCR15F two speed (2WL, 2L and 2R)

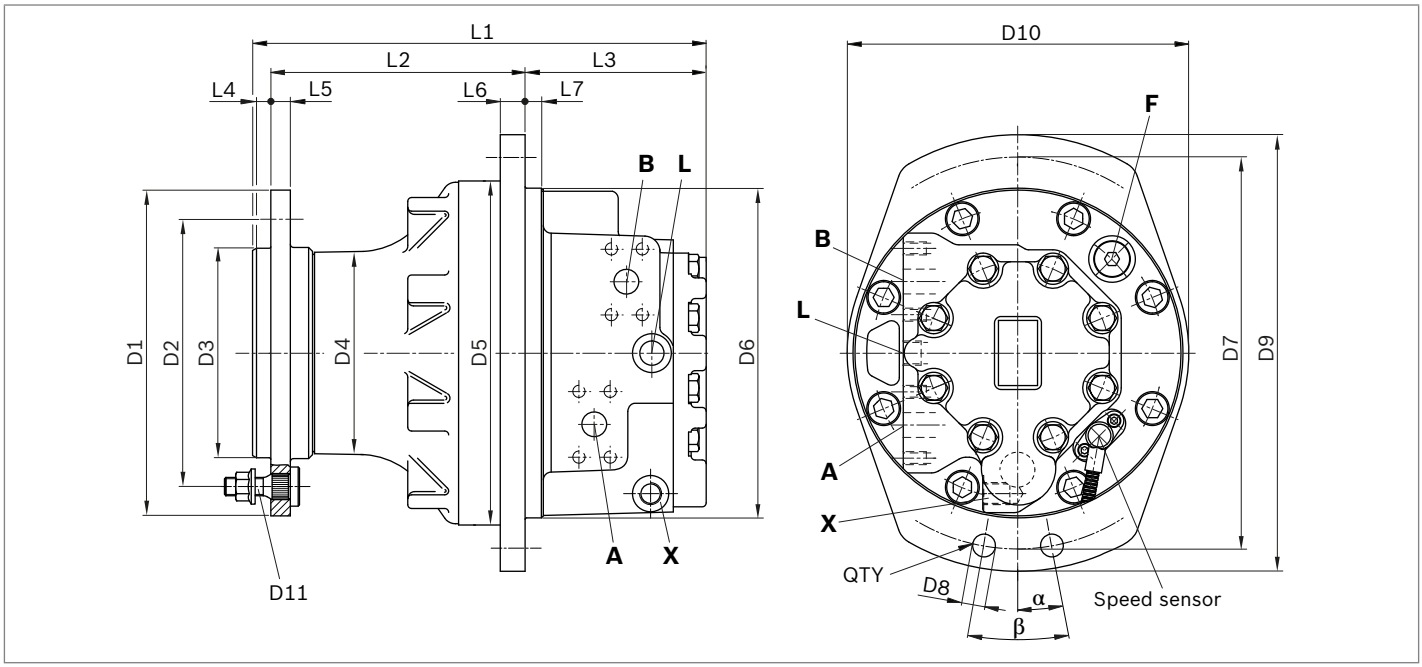

MCR5F two speed (2WL, 2L and 2R)

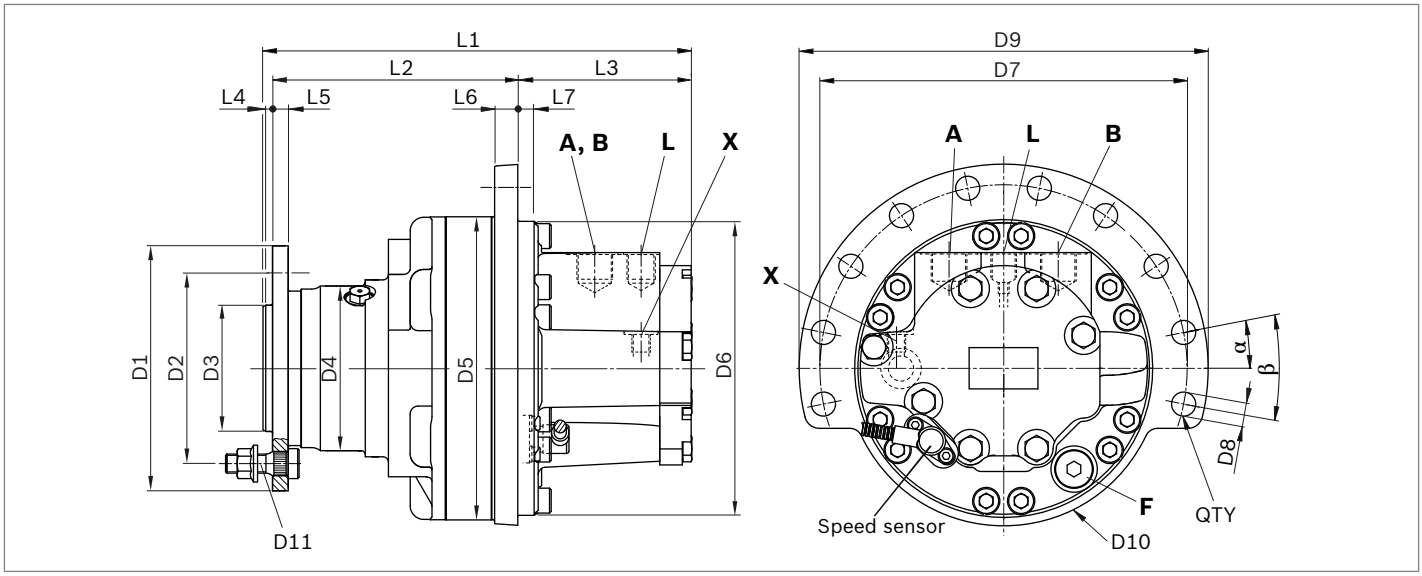

Motor	D1	D2	D3	D4	D5	D6	D7	D8	D9	D10	D11
MCR3	ø172	ø140	ø92.7	–	ø180	ø180	ø210	ø14	ø237	ø190	5xM14x1.5
MCR5	ø180	ø140	ø92.7	ø116.5	ø223	ø215.96	ø267	ø17.4	ø298	ø228	10xM18x1.5
MCR10	ø250	ø205	ø160	ø162	ø264	ø253	ø300	ø17.5	ø330	ø262	8xM20x1.5
MCR15	ø280	ø225	ø175.8	ø190	ø304	ø285	ø335	ø22.4	ø375	–	10xM22x1.5

Motor	L1	L2	L3	L4	L5	L6	L7	α	β	QTY
MCR3	274.1	143.6	123.5	6	12	13	6	0°	15°	10
MCR5	313.8	180	126.7	7	11.5	17	12	11.25°	22.5°	10
MCR10	350	195	141	14	15	19	12.5	0°	15°	10
MCR15	334.4	219.5	98.9	14	16	36.5	9	10°	20°	8

Before finalizing your design, request a binding installation drawing.
Dimensions in mm.

Ports

Motor	Designation	Port function	Code	Size	p_{max} [bar]	State[2)]
MCR3	**A, B**	Inlet, outlet	SAE J514	7/8-14 UNF	470/420[1)]	O
	L	Case drain	SAE J514	9/16-18 UNF	10	O
	F	Filler port	SAE J514	3/4-16 UNF	10	X
	X	2 speed port	SAE J514	9/16-18 UNF	35	O
MCR5	**A, B**	Inlet, outlet	SAE J514	1 1/16-12 UNF	470/420[1)]	O
	L	Case drain	SAE J514	3/4-16 UNF	10	O
	F	Filler port	SAE J514	3/4-16 UNF	10	X
	X	2 speed port	SAE J514	9/16-18 UNF	35	O
MCR10	**A, B**	Inlet, outlet	SAE J518[3)]	3/4 in	470/420[1)]	O
	L	Case drain	SAE J514	3/4-16 UNF	10	O
	F	Filler port	SAE J514	3/4-16 UNF	10	X
	X	2 speed port	SAE J514	9/16-18 UNF	35	O
MCR15	**A, B**	Inlet, outlet	SAE J518[3)]	3/4 in	470/420[1)]	O
	L	Case drain	SAE J514	3/4-16 UNF	10	O
	F	Filler port	SAE J514	3/4-16 UNF	10	X
	X	2 speed port	SAE J514	9/16-18 UNF	35	O

1) Depends on nominal size
2) O = Must be connected (plugged on delivery)
X = Plugged (in normal operation)
3) Dimensions according to SAE J518 (Code 62 - high pressure series)

Holding brake (multi-disc brake)

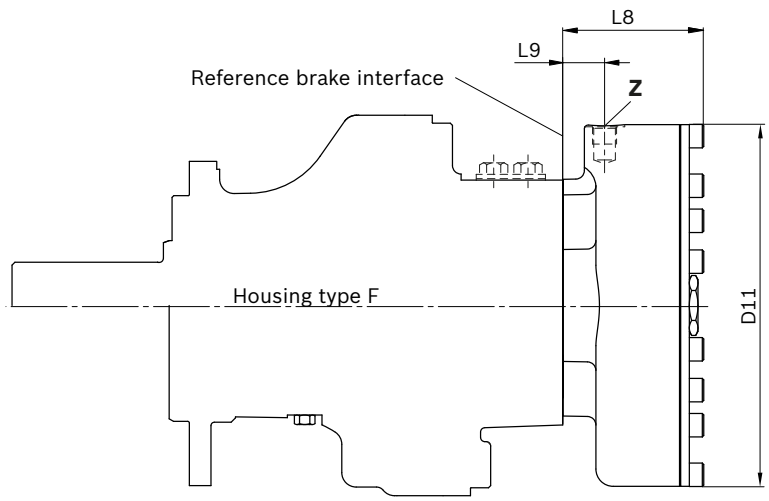

Motor	Brake	L8	L9	D11
MCR3	**B2**	67.3	22	ø174
MCR5	**B2**	67.3	22	ø174
	B4	80.7	26.5	ø215
MCR10	**B5**	84.7	26.5	ø215
	B7	97.8	29	ø251
MCR15	**B11**	102.3	33	ø282

Motor	Designation	Port function	Code	Size	p_{max} [bar]	State[1)]
MCR3	**Z**	Brake port	SAE J515	9/16-18 SAE	30	O
MCR5	**Z**	Brake port	SAE J515	9/16-18 SAE	30	O
MCR10	**Z**	Brake port	SAE J515	9/16-18 SAE	30	O
MCR15	**Z**	Brake Port	SAE J515	9/16-18 SAE	30	O

1) O = Must be connected (plugged on delivery)

Before finalizing your design, request a binding installation drawing.
Dimensions in mm.

6

RE 15198/07.2010, Bosch Rexroth AG

783

Dimensions

Dynamic brake (drum brake)

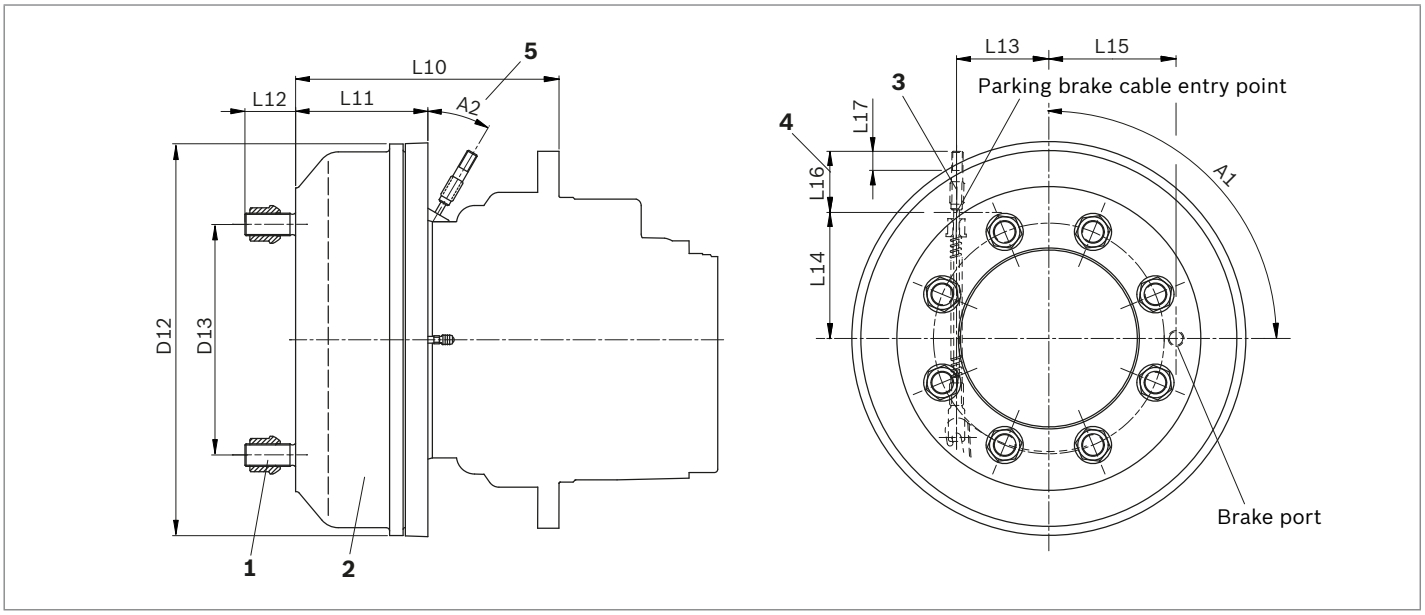

Motor	Brake	L10	L11	L12	L13	L14	L15	L16	L17	D12	D13	A1	A2
MCR3	**C2**	193	94.75	34.5	45	82	68.5	55	19	ø222	ø140	90°	30°
MCR5	**C4**	192	95	32.5	65	86	89	83	19	ø272	ø140	30°	30°
MCR10	**C7**	234.1	117.5	45	82	–	113	54	17	ø348	ø205	90°	30°
MCR15	**C12**	294.6	132	36	80	–	120	40	17	ø365	ø225	90°	30°

1	**C2**	5 Studs M14x1.5 with spherical wheel nuts
	C4	10 Studs M18x1.5 with spherical wheel nuts
	C7	8 Studs M20x1.5 with spherical wheel nuts
	C12	10 Studs M22x1.5 with hexagonal wheel nuts
2	Dynamic drum brake for use with brake fluid DOT 3+5 or SAE JI 703. If brake is to be used with mineral oil a special order is to be made. Please state if seals for mineral oil are required when placing order.	
3	For use as a mechanical park brake a brake cable (Bowden cable) can be connected from right side for C*R and left side for C*L (left is s mirror image of the right type) (* = 2, 4, 7, 12). Mechanical brake cable is not supplied with the motor.	
4	Brake cable length.	
5	Angular position of brake cable.	

Before finalizing your design, request a binding installation drawing.
Dimensions in mm.

Dynamic drum brake run-in procedure

- Brake the machine hard in forward and reverse directions until the brake drum temperature reaches 200 °C.
- Allow the brake to cool.
- To remove residue, brake gently 2 times each in the forward and reverse directions.

Note:

The drum brake cylinder port must be oriented as instructed in the installation drawing. The drum brake also has an influence on permitted radial loading due to its offset.

Left side of vehicle
Ordering code C4L

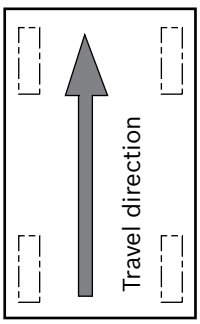

Right side of vehicle
Ordering code C4R

Selection guide

Data sheet	Motor type Application		Frame size 3 160..400 cc	5 380..820 cc	6 820..920 cc	10 780..1340 cc	15 1130..2150 cc	20 1750..3000 cc
15198	**MCR-F** Wheel drives		●	●	–	●	●	–
15200	**MCR-W** Heavy duty wheel drives		●	●	–	●	–	–
15195	**MCR-A** Frame integrated drives		●	●	–	●	–	–
15199	**MCR-H** Integrated drives		●	●	–	●	●	●
15221	**MCR-T** Track drives		–	●	●	●	–	–
15223	**MCR-R Series 41** Hydraulic drive assist		–	–	–	●	–	–
15214	**MCR-X** Slew drives		●	●	–	–	–	–
15197	**MCR-C** Compact drives		–	–	–	–	–	●
15196	**MCR-D** Industrial applications		●	●	–	●	–	–
	MCR-E Industrial applications		–	●	–	–	–	–

Radial piston motor for integrated drives
MCR-H

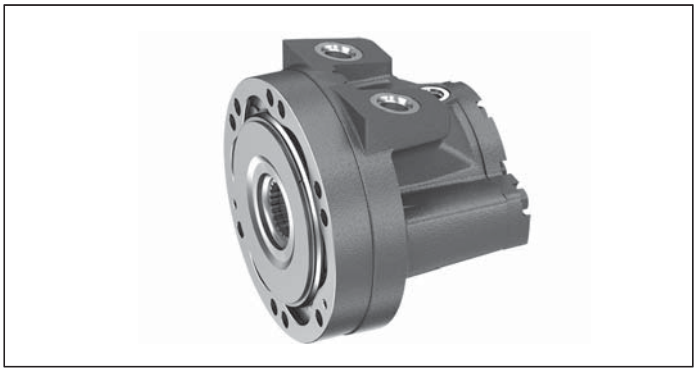

- Frame size MCR3, MCR5, MCR10, MCR15, MCR20
- Displacement 160 cc to 3000 cc
- Differential pressure up to 450 bar
- Torque output up to 19099 Nm
- Speed up to 875 rpm
- Open and closed circuits

Features

- Hydrobase motor
- Optimised design for integration
- Compact installation in customer structure
- High volumetric and mechanical efficiencies
- High reliability
- Low maintenance
- Smooth running at very low speeds
- Low noise
- Bi-directional
- Freewheeling possible
- Available with:
  - Holding brake (multi-disc)
  - Bi-directional two speed
  - Integrated flushing valve
  - Speed sensor

Contents

Functional description	2
Ordering code	5
Technical data	7
Efficiencies	9
Dimensions	10
Selection guide	16

6

RE 15999/12.2012, Bosch Rexroth AG

Functional description

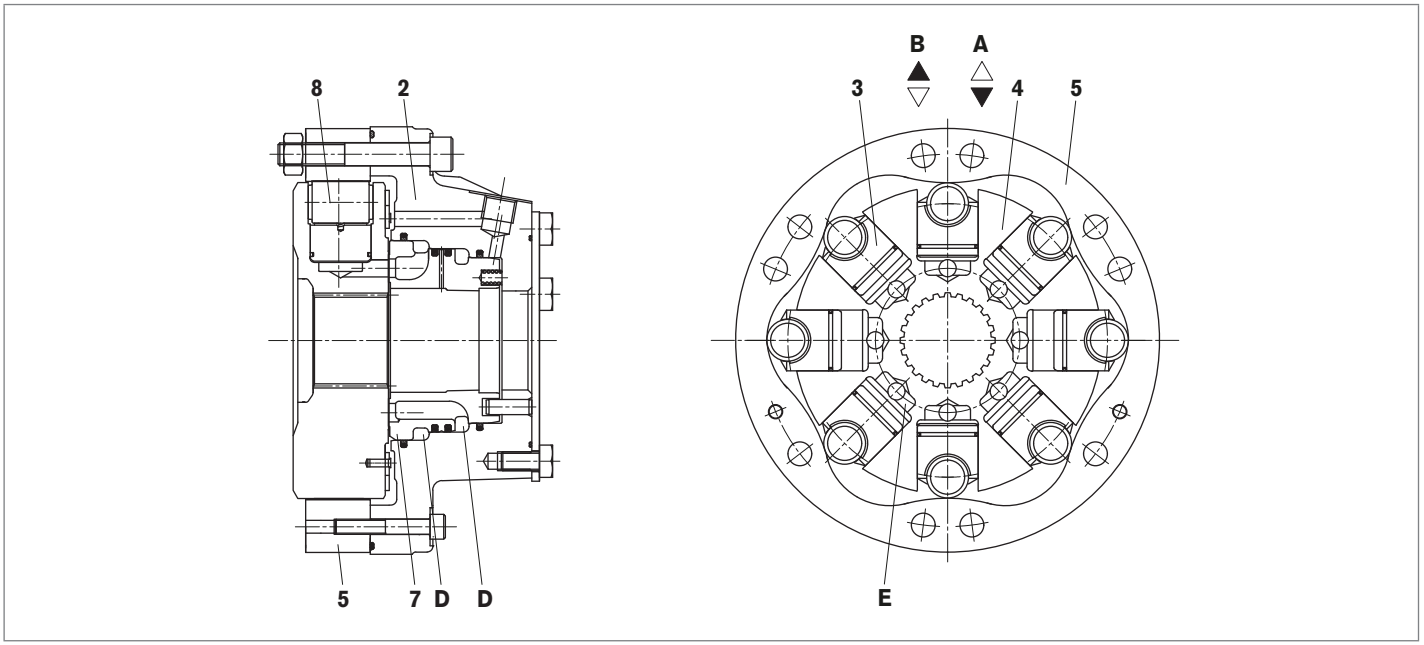

Hydraulic motors of the type MCR-H are radial piston motors with a hydraulic rotary group as the base (Hydro-base) and a rear case sub assembly. These motors are intended for various integrated drive applications in open or closed circuits where the front case, shaft and bearing arrangement of the motor are provided by the customer structure. Some of the applications in which these motors are used are construction machinery, fork lift trucks, forestry machines and industrial applications. The compact design allows installation to very confined spaces and contributes in weight savings.

Construction

Rear case (**2**), rotary group (**3**, **4, 8**), cam (**5**) and flow distributor (**7**)

Transmission

The cylinder block (**4**) is connected to the shaft located in the customer structure to which the motor is mounted by means of splines. The pistons (**3**) are arranged radially in the cylinder block (**4**) and make contact with the cam (**5**) via rollers (**8**).

Torque generation

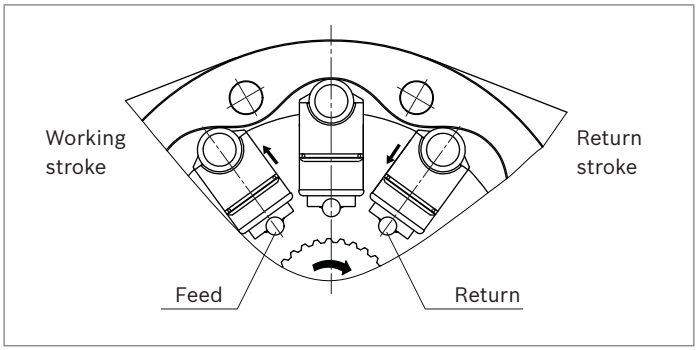

The number of working and return strokes corresponds to the number of lobes on the cam multiplied by number of pistons in the cylinder block.

Flow paths

The ports **A** and **B**, which are located in the rear case, carry oil through the distributor to the cylinder chambers (**E**).

Freewheeling

In certain applications there may be a requirement to freewheel the motor. This may be achieved by connecting ports **A** and **B** to zero pressure and simultaneously applying a pressure of 2 bar to the housing through port **L**. In this condition, the pistons are forced into the cylinder block which forces the rollers to lose contact with the cam thus allowing free rotation of the shaft.

Two speed operation (2W)

In mobile applications where vehicles are required to operate at high speed with low motor loads, the motor can be switched to a low-torque and high-speed mode. This is achieved by operating an integrated valve which directs hydraulic fluid to only one half of the motor while continuously re-circulating the fluid in the other half. This “reduced displacement” mode reduces the flow required for a given speed and gives the potential for cost and efficiency improvements. The motor maximum speed remains unchanged.

Bosch Rexroth has developed a special spool valve to allow smooth switching to reduced displacement whilst on the move. This is known as “soft-shift” and is a standard feature of 2W motors. The spool valve requires either an additional sequence valve or electro-proportional control to operate in “soft-shift” mode.

▼ **Schematic**

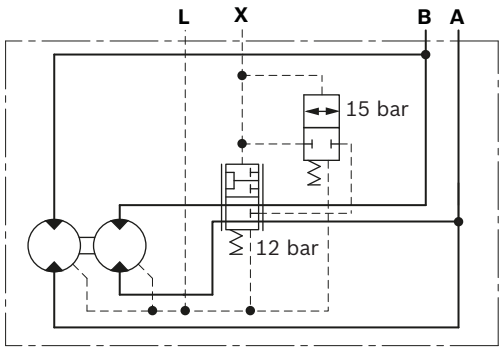

Flushing valve

In a closed circuit, the same hydraulic fluid continuously flows between the pump and the motor. This could therefore lead to overheating of the hydraulic fluid.

The function of the flushing valve option is to replace hydraulic fluid in the closed circuit with that from the reservoir. When the hydraulic motor is operated under load, either in the clockwise or anti-clockwise direction, the flushing valve opens and takes a fixed flow of fluid through an orifice from the low pressure side of the circuit. This flow is then fed to the motor housing and back to the reservoir normally via a cooler. In order to charge the low pressure side of the circuit, cool fluid is drawn from the reservoir by the boost pump and is fed to the pump inlet through the check valve. Thus the flushing valve ensures a continuous renewal and cooling of the hydraulic fluid. The flushing feature incorporates a relief valve which is used to maintain a minimum boost pressure and operates at a standard setting of 14 bar (other options available on request).

Different orifice sizes may be used to select varying flows of flushing fluid. The following table gives flushing rate values based on a boost/charge pressure of 25 bar.

▼ **Schematic**

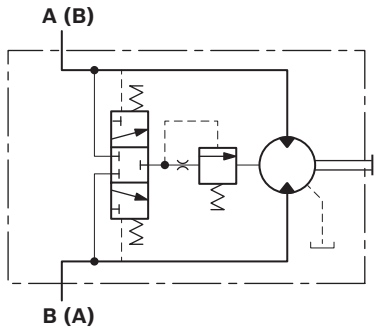

Flushing flow rates

Flushing code	Orifice size (mm)	Flow (l/min) at 25 bar[1)]	
		min	max
F1	Ø1	2.2	2.7
F2	Ø1.5	5.0	6.1
F7	Ø1.7	6.4	7.8
F4	Ø2	8.2	10.7
F6	Ø2.3	8.8	11.4

1) 0.6 mm Shim (Standard), Cracking pressure = 11±3 bar

Holding brake (multi-disc brake)

Mounting
By way of rear housing (**2**) and brake shaft (**14**).

Brake application
As a safety requirement in mobile applications a parking brake may be provided to ensure that the motor cannot turn when the machine is not in use. The parking brake provides holding torque by means of discs (**11**) that are compressed by a disc spring (**10**). The brake is released when oil pressure is applied to brake port "**Z**" and the pressure in the annular area (**9**) compresses the disc spring using brake piston (**12**) thus allowing the brake discs (**11**) to turn independently.

Note
This brake is provided solely for static use - not to be used dynamically.

▼ **Schematic diagrams**

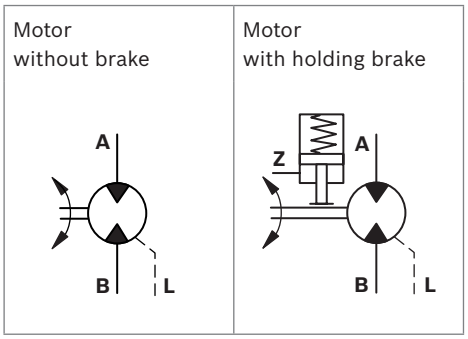

Manual release of holding brake
The brake may also be released manually by loosening screws (**13**).

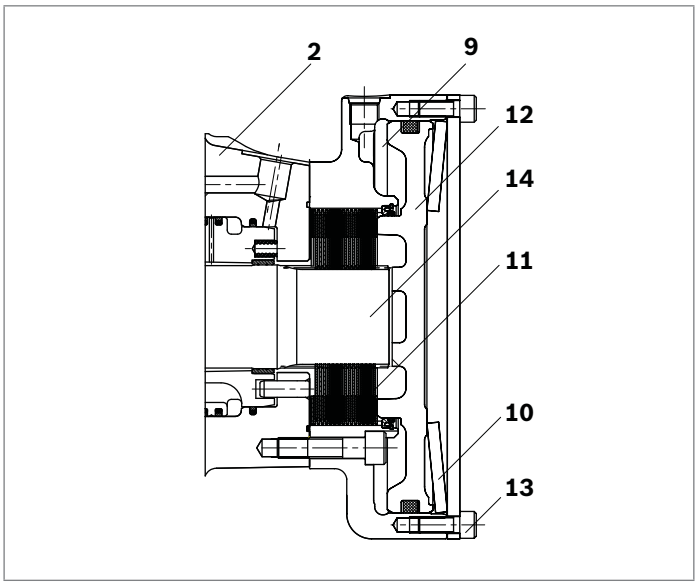

Speed sensor
A Hall-effect speed sensor (**16**) may be fitted as an option, giving a two-channel output of phase-displaced square waves, and enabling detection of speed and direction. A toothed target disc (**17**) is fitted to the motor cylinder block (**4**), and the sensor, fitted to a port in the rear case, produces a pulse on each channel as each tooth passes in front of it. The frequency of the pulses is proportional to the rotational speed.
Versions are available for use with regulated supplies 10 V (Code P1) and for direct connection to a 12 V or 24 V unregulated supply (Code P2).
The motor can also be supplied fitted with a target disc and with a speed sensor port machined, but covered and sealed with a blanking plate (Code P0). These "sensor-ready" motors may be fitted with a sensor at a later date.

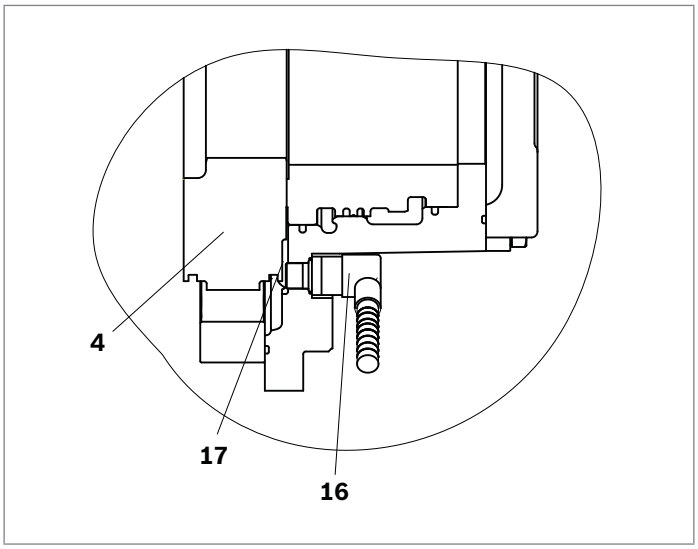

Direction of rotation with flow
(viewed from cylinder block)

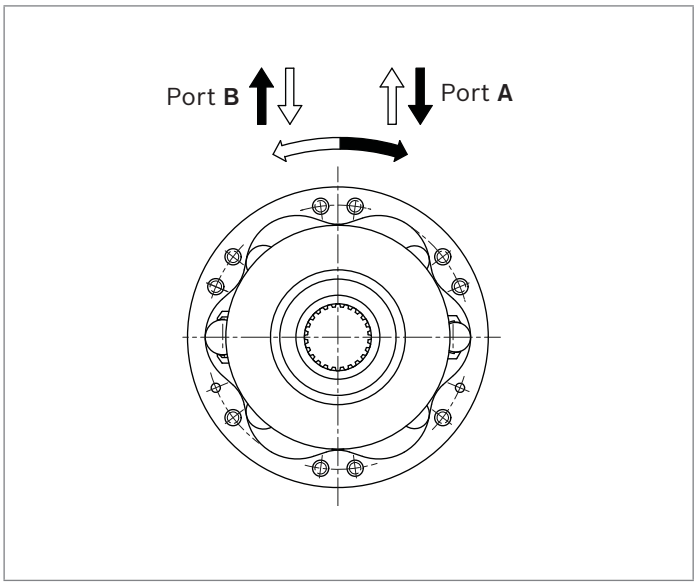

Ordering code

01	02	03	04	05	06		07	08	09	10	11	12	13	14	15	16
MCR		**H**			**Z**	**/**	**33**									

Radial piston motor

01	Radial-piston type, low-speed, high-torque motor	**MCR**

Frame size

02	Frame size	3	**3**
		5	**5**
		10	**10**
		15	**15**
		20	**20**

Housing type

03	Hydrobase motor	**H**

Nominal size, displacement V_g in cm^3/rev

04	Frame size 3		**160**	**225**	**255**	**280**	**325**	**365**	**400**	
	Low displacement: motors use standard cylindrical pistons	LD	●	●	●	●	–	–	–	
	High displacement: motors use stepped pistons	HD	–	–	–	–	●	●	●	
	Frame size 5		**380**	**470**	**520**	**565**	**620**	**680**	**750**	**820**
	Low displacement: motors use standard cylindrical pistons	LD	●	●	●	●	–	–	–	–
	High displacement: motors use stepped pistons	HD	–	–	–	–	●	●	●	●
	Frame size 10		**780**	**860**	**940**	**1120**	**1250**	**1340**		
	Low displacement: motors use standard cylindrical pistons	LD	●	●	●	–	–	–		
	High displacement: motors use stepped pistons	HD	–	–	–	●	●	●		
	Frame size 15		**1130**	**1250**	**1500**	**1780**	**2150**			
	Low displacement: motors use standard cylindrical pistons	LD	●	●	●	–	–			
	High displacement: motors use stepped pistons	HD	–	–	–	●	●			
	Frame size 20		**1750**	**2100**	**2500**	**3000**				
	Low displacement: motors use standard cylindrical pistons	LD	●	●	–	–				
	High displacement: motors use stepped pistons	HD	–	–	●	●				

Drive shaft

05	Without drive shaft	**Z**

Rear shaft

06	Without rear shaft	**Z**

Series

07	Series 33	**33**[1)]

Brake			**MCR3**	**MCR5**	**MCR10**	**MCR15**	**MCR20**	
08	Without brake		●	●	●	●	●	**A0**
	Hydraulic release spring applied multi-disc holding brake	2200 Nm	●	●	–	–	–	**B2**
		4400 Nm	–	●	–	–	–	**B4**
		4400 Nm	–	–	●	–	–	**B5**
		7000 Nm	–	–	●	–	–	**B7**
		11000 Nm	–	–	–	●	–	**B11**
		19000 Nm	–	–	–	–	●	**B19**

● = Available – = Not available

[1)] This data sheet also applies series 32.

Ordering code

01	02	03	04	05	06		07	08	09	10	11	12	13	14	15	16
MCR		**H**			**Z**	**/**	**33**									

Seals

09	NBR (nitrile rubber)	**M**
	FKM (fluoroelastomer / Viton)	**V**

Single/two-speed operation		**MCR3**	**MCR5**	**MCR10**	**MCR15**	**MCR20**	
10	Single speed, standard direction of rotation	●	●	●	●	●	**1L**
	Bi-directional two speed, standard direction of rotation	●	●	●	●	●	**2WL**

Ports		**MCR3**	**MCR5**	**MCR10**	**MCR15**	**MCR20**	
11	Tapped with UNF thread (SAE J514)	●	●	–	–	–	**12**
	Tapped with UNF thread (SAE J514) (A and B ports SAE split flange metric bolt holes)	–	–	●	●	–	**42**
	BSP threaded ports (A and B ports SAE split flange metric bolt holes)	–	–	–	–	●	**11**

Studs

12	Without studs (no code)	

Speed sensor

13	Without sensor (no code)	
	Sensor ready	**P0**
	Sensor without regulator	**P1**
	Sensor with regulator	**P2**

Flushing

14	Without flushing (no code)	
	With flushing (see table on page 3)	**F1-F7**

Special order

15	Special feature	**SOXXX**

Other

16	Mark in text here	*

Technical data

Frame size			MCR3	MCR5	MCR10	MCR15	MCR20			
Type of mounting			Face mounting							
Pipe connections[1)2)]			Threaded per SAE J514; Flanged per SAE J518							
Weight										
Single speed (1L)	m	kg	12	23	36	54	76			
Two speed (2WL)	m	kg	18	30	40	54	76			
Hydraulic fluid[3)]										
Fluid cleaniness			ISO 4406, Class 20/18/15							
Fluid viscosity range	$v_{min/max}$	mm²/s	10 to 2000							
Fluid temperature range[4)]	$\theta_{min/max}$	°C	-20 to +85							
Pressure			Low displacement				High displacement			
Operating pressure	p_{nom}	bar	250				250			
Maximum differential pressure[5)6)]	Δp_{max}	bar	450				400			
Maximum pressure at port **A** or **B**[5)6)]	p_{max}	bar	470				420			
Maximum case drain pressure	$p_{case\ max}$	bar	10				10			
Motor performance MCR3										
Displacement	V_g	cm³/rev	160	225	255	280	325	365	400	
Specific torque		Nm/bar	3	4	4	4	5	6	6	
Maximum torque[5)]	T_{max}	Nm	1146	1611	1826	2005	2069	2324	2546	
Minimum speed for smooth running[7)]	n_{min}	rpm	0.5	0.5	0.5	0.5	0.5	0.5	0.5	
Maximum speed (1L)[8)9)]	n_{max}	rpm	670	475	420	385	330	295	270	
Maximum speed (2WL)[8)9)]	n_{max}	rpm	875	620	550	500	430	385	350	
Continuous operating power[10)]	P	kW	11.64	15.34	15.17	17.48	11.61	11.38	14.99	
Motor performance MCR5										
Displacement	V_g	cm³/rev	380	470	520	565	620	680	750	820
Specific torque		Nm/bar	6	7	8	9	10	11	12	13
Maximum torque[5)]	T_{max}	Nm	2722	3366	3724	4047	3947	4329	4775	5220
Minimum speed for smooth running[7)]	n_{min}	rpm	0.5	0.5	0.5	0.5	0.5	0.5	0.5	0.5
Maximum speed (1L)[8)9)]	n_{max}	rpm	475	385	350	320	290	265	240	220
Maximum speed (2WL)[8)9)]	n_{max}	rpm	570	465	420	385	350	320	290	265
Continuous operating power[10)]	P	kW	38.01	38.14	37.86	42.42	26.52	25.85	24.42	31.98
Motor performance MCR10										
Displacement	V_g	cm³/rev	780	860	940		1120	1250	1340	
Specific torque		Nm/bar	12	14	15		18	20	21	
Maximum torque[5)]	T_{max}	Nm	5586	6159	6732		7130	7958	8531	
Minimum speed for smooth running[7)]	n_{min}	rpm	0.5	0.5	0.5		0.5	0.5	0.5	
Maximum speed (1L and 2WL)[8)9)]	n_{max}	rpm	215	195	180		150	135	125	
Continuous operating power[10)]	P	kW	50.21	55.67	52.82		38	42.34	38.81	
Motor performance MCR15										
Displacement	V_g	cm³/rev	1130	1250	1500		1780	2150		
Specific torque		Nm/bar	18	20	24		28	34		
Maximum torque[5)]	T_{max}	Nm	8093	8952	10743		11332	13687		
Minimum speed for smooth running[7)]	n_{min}	rpm	0.5	0.5	0.5		0.5	0.5		
Maximum speed (1L and 2WL)[8)9)]	n_{max}	rpm	150	150	150		125	125		
Continuous operating power[10)]	P	kW	81.82	86.37	98.33		67.99	76.66		

RE 15999/12.2012, Bosch Rexroth AG

Motor performance MCR20			Low displacement		High displacement	
Displacement	V_g	cm^3/rev	1750	2100	2500	3000
Specific torque		Nm/bar	28	33	40	44
Maximum torque[5)]	T_{max}	Nm	12533	15040	15915	19099
Minimum speed for smooth running[7)]	n_{min}	rpm	0.5	0.5	0.5	0.5
Maximum speed (1L and 2WL)[8)9)]	n_{max}	rpm	125	125	115	115
Continuous operating power[10)]	P	kW	117.29	103.12	94.18	93.01

			MCR3	**MCR5**		**MCR10**		**MCR15**	**MCR20**
Holding brake (disc brake)			**B2**	**B2**	**B4**	**B5**	**B7**	**B11**	**B19**
Minimum holding torque	$t_{min/max}$	Nm	2200	2200	4400	4400	7000	11000	19000
Release pressure (min)	$p_{rel\ min}$	bar	11	11	11	11	11	12	15
Release pressure (max)	$p_{rel\ max}$	bar	15	15	15	15	15	15	30
Maximum pressure at brake port „Z“	p_{max}	bar	40	40	40	40	40	40	40
Oil volume to operate brake	V_{rel}	cm^3	23	23	46	17	36	77	99

Note

- Motor performance values are based on theoretical calculations.
- Efficiencies are not taken into consideration for theoretical calculations.
- Brake torque accounts for tolerances. Values are based when used with standard mineral oil (HLP).

Please refer the related foot notes for more details.

Footer from page 7 and 8

1) Ensure motor case is filled with oil prior to start-up.
2) For installation and maintenance details, please see instruction manual 15215-B.
3) For use with environmentally acceptable fluids HEES, HEPG, HETG, fluoroelastomer / Viton seals must be specified.
4) Extension of the allowable temperature range may be possible depending on specification. Please consult Bosch Rexroth Engineering Department in Glenrothes for further details.
5) Maximum values should only be applied for a small portion of the duty cycle. Please consult Bosch Rexroth Engineering Department in Glenrothes for motor life calculations based on particular operating cases.
6) When operating motors in series, please consult Bosch Rexroth Engineering Department in Glenrothes.
7) For continuous operation at speeds <5 rpm please consult Bosch Rexroth Engineering Department in Glenrothes.
8) Based on nominal no-load Δp of 20 bar in full-displacement mode.
9) Warning! During the running in period of the motor (min. 20 hrs) it should not be run unloaded at >100 rpm.
10) Guide values for up to 5000 hours of motor operation (ISO VG46 at 50 °C).

Efficiencies

▼ **Mechanical efficiency**

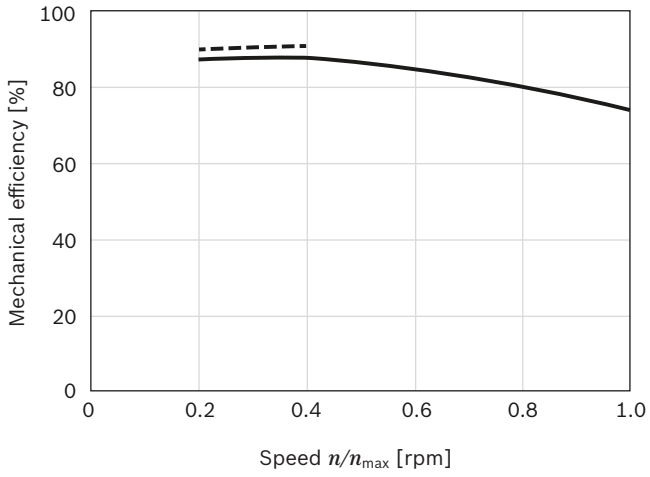

▼ **Charge pressure**

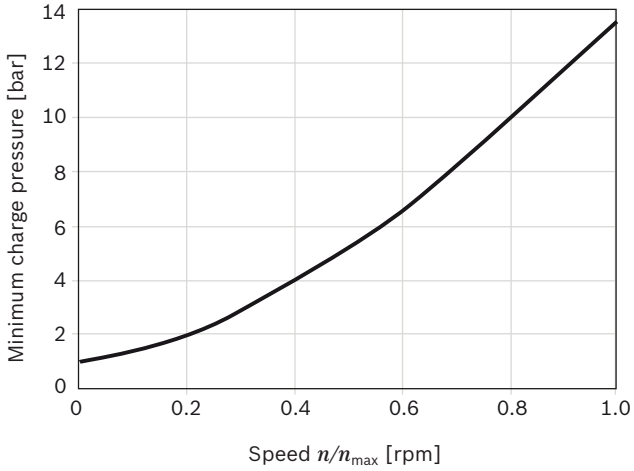

▼ **Volumetric efficiency**

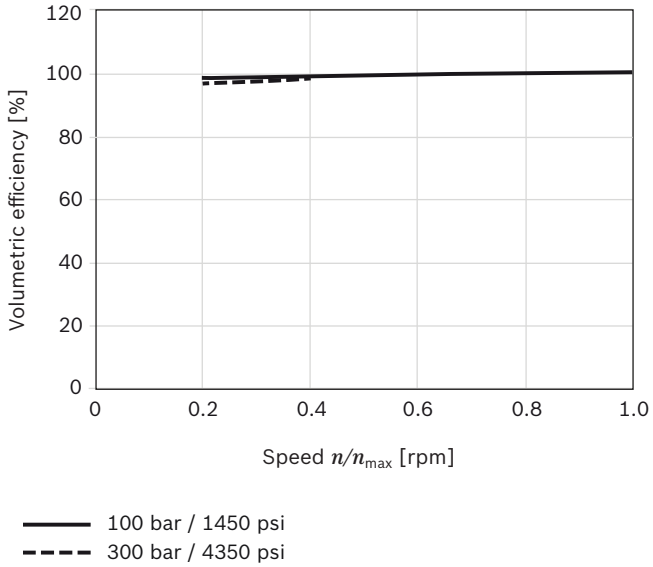

Note:

For specific performance information or operating conditions contact the Engineering Department at Bosch Rexroth, Glenrothes.

Dimensions

MCR-H single speed (1L)

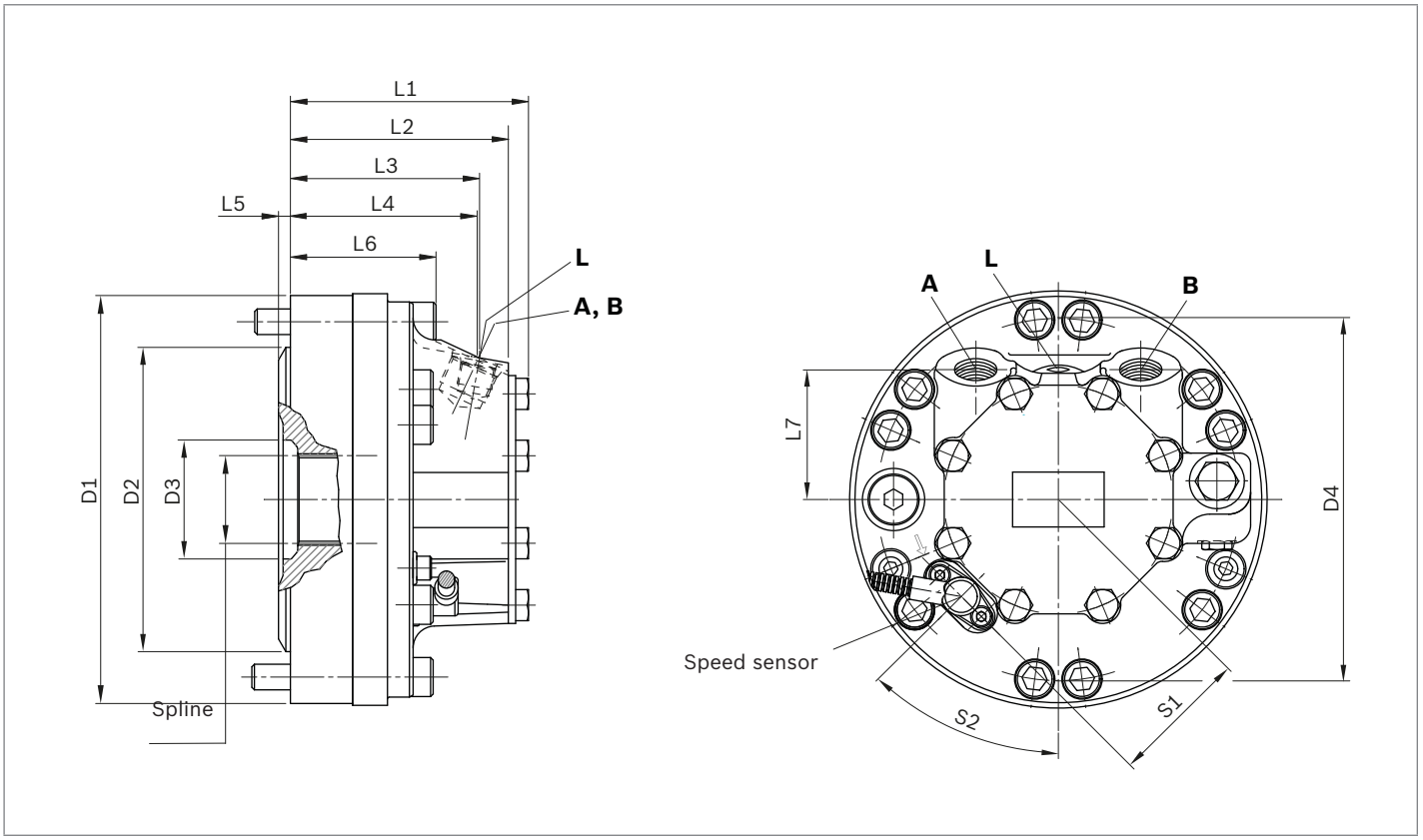

Motor	D1	D2	D3	D4	L1	L2	L3	L4	L5	L6	L7
MCR3	ø180	ø131	ø50	ø156	105	95	83	71	9	48	66.5
MCR5	ø223	ø166.3	ø65.25	ø196	130	119	103	103	6.5	68	76
MCR10	ø264	ø192	ø81.13	ø223	167	141.5	125	105.5	9.4	63.5	102
MCR15	ø304	ø229	ø96.5	ø304	173.4	156.7	141	116	10	84.5	115
MCR20	ø345	ø260	ø108.25	ø310	217.7	173.8	129	129	15.5	81	120

Motor	S1	S2	Spline
MCR3	63.5	90°	BS3550 class 1 fillet root side fit, pitch 24/48, PCD 38.1 mm, No of spaces 36
MCR5	75	45°	N50 x 2 x 24 x 9H DIN 5480
MCR10	89	45°	N65 x 2 x 31 x 9H DIN 5480
MCR15	103	45°	N75 x 2 x 36 x 9H DIN 5480
MCR20	125	45°	N90 x 2 x 44 x 9H DIN 5480

Before finalizing your design, request a binding installation drawing.
Dimensions in mm.

Ports

Motor	Designation	Port function	Code	Size	p_{max} [bar]	State[2)]
MCR3	**A, B**	Inlet, outlet	SAE J514	7/8-14 UNF	470/420[1)]	O
	L	Case drain	SAE J514	9/16-18 UNF	10	O
	F	Filler port	SAE J514	3/4-16 UNF	10	X
MCR5	**A, B**	Inlet, outlet	SAE J514	1 1/16-12 UNF	470/420[1)]	O
	L	Case drain	SAE J514	3/4-16 UNF	10	O
	F	Filler port	SAE J514	3/4-16 UNF	10	X
MCR10	**A, B**	Inlet, outlet	SAE J518[3)]	3/4 in	470/420[1)]	O
	L	Case drain	SAE J514	3/4-16 UNF	10	O
	F	Filler port	SAE J514	3/4-16 UNF	10	X
MCR15	**A, B**	Inlet, outlet	SAE J518[3)]	3/4 in	470/420[1)]	O
	L	Case drain	SAE J514	3/4-16 UNF	10	O
	F	Filler port	SAE J514	3/4-16 UNF	10	X
MCR20	**A, B**	Inlet, outlet	SAE J518[3)]	1 in	470/420[1)]	O
	L	Case drain	SAE J514	3/4-16 UNF	10	O
	F	Filler port	SAE J514	3/4-16 UNF	10	X

1) Depends on nominal size
2) O = Must be connected (plugged on delivery)
X = Plugged (in normal operation)
3) Dimensions according to SAE J518 (Code 62 - high pressure series)

RE 15999/12.2012, Bosch Rexroth AG

MCR-H two speed (2WL)

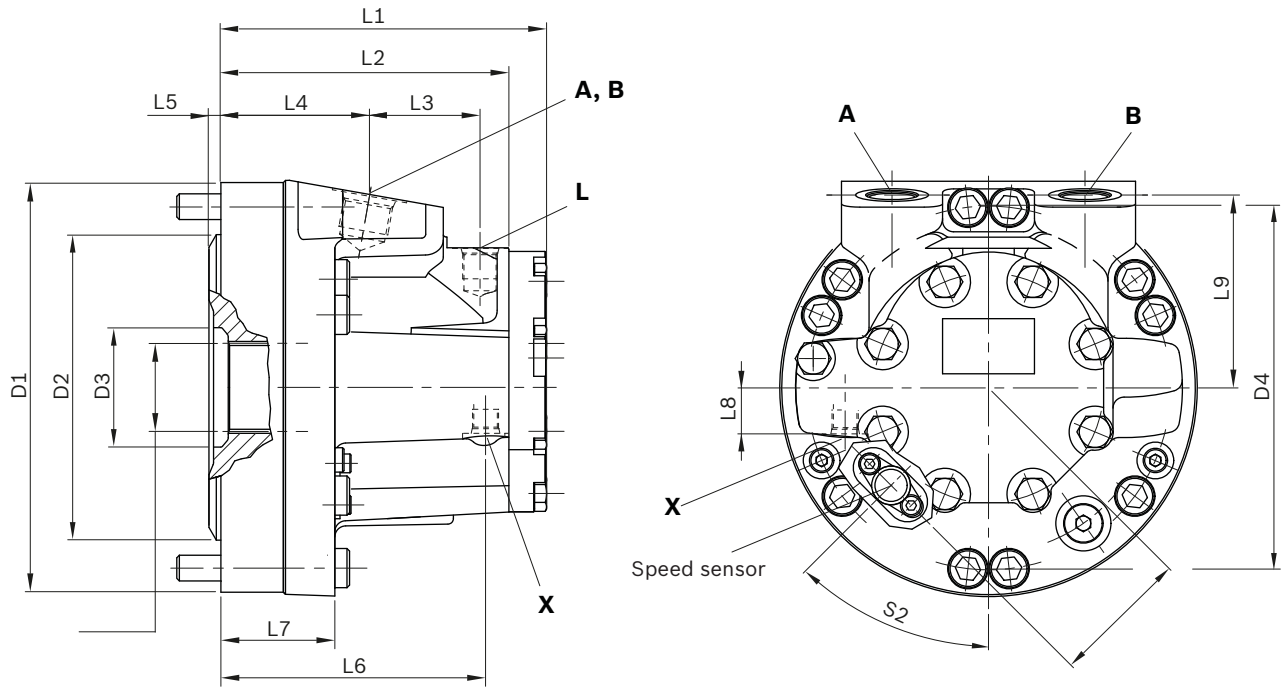

Motor	D1	D2	D3	D4	L1	L2	L3	L4	L5	L6	L7
MCR3	ø180	ø131	ø50	ø156	129	114	101	83	9	48	97
MCR5	ø223	ø166.3	ø65.25	ø196	179.1	159.1	144	81	6.5	62	144
MCR10	ø264	ø192	ø81.13	ø223	192	166.5	150	105.5	10.15	63.5	151
MCR15	ø304	ø229	ø96.5	ø304	173.4	156.7	141	116	10	84.5	140.5
MCR20	ø345	ø260	ø108.25	ø310	217.7	173.8	129	129	15.5	81	118.5

Motor	L8	L9	S1	S2	Spline
MCR3	26	67.5	63.5	300°	BS3550 class 1 fillet root side fit, pitch 24/48, PCD 38.1 mm, No of spaces 36
MCR5	25	105	75	45°	N50 x 2 x 24 x 9H DIN 5480
MCR10	25	88	89	45°	N65 x 2 x 31 x 9H DIN 5480
MCR15	28.5	105	103	45°	N75 x 2 x 36 x 9H DIN 5480
MCR20	38	120	125	45°	N90 x 2 x 44 x 9H DIN 5480

Before finalizing your design, request a binding installation drawing.
Dimensions in mm.

Ports

Motor	Designation	Port function	Code	Size	p_{max} [bar]	State[2)]
MCR3	**A, B**	Inlet, outlet	SAE J514	7/8-4 UNF	470/420[1)]	O
	L	Case drain	SAE J514	9/16-18 UNF	10	O
	F	Filler port	SAE J514	3/4-16 UNF	10	X
	X	2 speed port	SAE J514	9/16-18 UNF	35	O
MCR5	**A, B**	Inlet, outlet	SAE J514	1 1/16-12 UNF	470/420[1)]	O
	L	Case drain	SAE J514	3/4-16 UNF	10	O
	F	Filler port	SAE J514	3/4-16 UNF	10	X
	X	2 speed port	SAE J514	9/16-18 UNF	35	O
MCR10	**A, B**	Inlet, outlet	SAE J518[3)]	3/4 in	470/420[1)]	O
	L	Case drain	SAE J514	3/4-16 UNF	10	O
	F	Filler port	SAE J514	3/4-16 UNF	10	X
	X	2 speed port	SAE J514	9/16-18 UNF	35	O
MCR15	**A, B**	Inlet, outlet	SAE J518[3)]	3/4 in	470/420[1)]	O
	L	Case drain	SAE J514	3/4-16 UNF	10	O
	F	Filler port	SAE J514	3/4-16 UNF	10	X
	X	2 speed port	SAE J514	9/16-18 UNF	35	O
MCR20	**A, B**	Inlet, outlet	SAE J518[3)]	1 in	470/420[1)]	O
	L	Case drain	SAE J514	3/4-16 UNF	10	O
	F	Filler port	SAE J514	3/4-16 UNF	10	X
	X	2 speed port	SAE J514	9/16-18 UNF	35	O

1) Depends on nominal size
2) O = Must be connected (plugged on delivery)
X = Plugged (in normal operation)
3) Dimensions according to SAE J518 (Code 62 - high pressure series)

Holding brake (multi-disc brake)

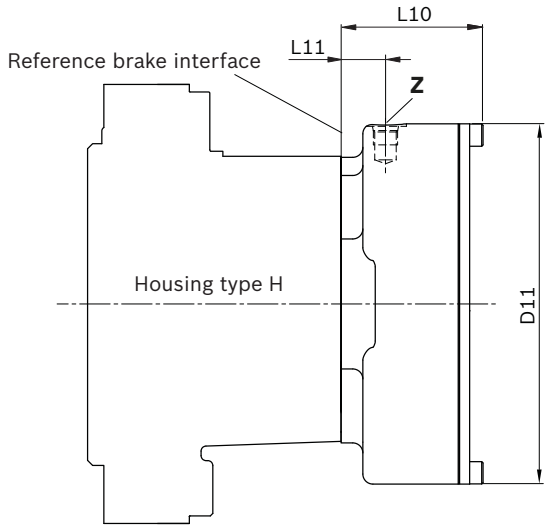

Motor	Brake	L10	L11	D11
MCR3	**B2**	67.3	22	ø174
MCR5	**B2**	67.3	22	ø174
	B4	80.7	26.5	ø215
MCR10	**B5**	84.7	26.5	ø215
	B7	97.8	29	ø251
MCR15	**B11**	102.3	33	ø282
MCR20	**B19**	116.3	32	ø328

Ports

Motor	Designation	Port function	Code	Size	p_{max} [bar]	State
MCR3	**Z**	Brake Port	SAE J515	9/16-18 SAE	30	O
MCR5	**Z**	Brake Port	SAE J515	9/16-18 SAE	30	O
MCR10	**Z**	Brake Port	SAE J515	9/16-18 SAE	30	O
MCR15	**Z**	Brake Port	SAE J515	9/16-18 SAE	30	O
MCR20	**Z**	Brake Port	SAE J515	9/16-18 SAE	30	O

1) O = Must be connected (plugged on delivery)

Before finalizing your design, request a binding installation drawing.
Dimensions in mm.

RL 15199/12.2010, **Bosch Rexroth AG**

Selection guide

Data sheet	Motor type Application		Frame size 3 160..400 cc	 5 380..820 cc	 6 820..920 cc	 10 780..1340 cc	 15 1130..2150 cc	 20 1750..3000 cc
15198	**MCR-F** Wheel drives		●	●	–	●	●	–
15200	**MCR-W** Heavy duty wheel drives		●	●	–	●	–	–
15195	**MCR-A** Frame integrated drives		●	●	–	●	–	–
15199	**MCR-H** Integrated drives		●	●	–	●	●	●
15221	**MCR-T** Track drives		–	●	●	●	–	–
15223	**MCR-R Series 40** Hydraulic drive assist		–	–	–	●	–	–
15214	**MCR-X** Slew drives		●	●	–	–	–	–
15197	**MCR-C** Compact drives		–	–	–	–	–	●
15196	**MCR-D** Industrial applications		●	●	–	●	–	–
	MCR-E Industrial applications		–	●	–	–	–	–

Radial piston motor for hydraulic drive assist
MCR-R
Series 41

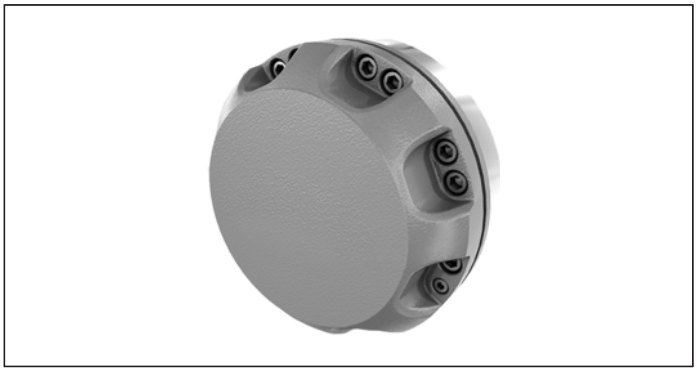

- Frame size MCR 10
- Displacement 780cc and 1120cc
- Differential pressure up to 450 bar
- Torque output up to 6420 Nm
- Drive speed up to 215 rpm
- Freewheel speed up to 600 rpm
- Open and closed circuits

Features

- Compact robust construction
- Rotating case design
- High volumetric and mechanical efficiencies
- High pressure rating
- High reliability
- Low maintenance
- Smooth running at very low speeds
- Low noise
- Integrated flushing in drive and freewheel

Contents

Functional description	2
Ordering code	4
Technical data	5
Dimensions	7
Selection guide	8

6

RE 15223/07.2010, Bosch Rexroth AG

Functional description

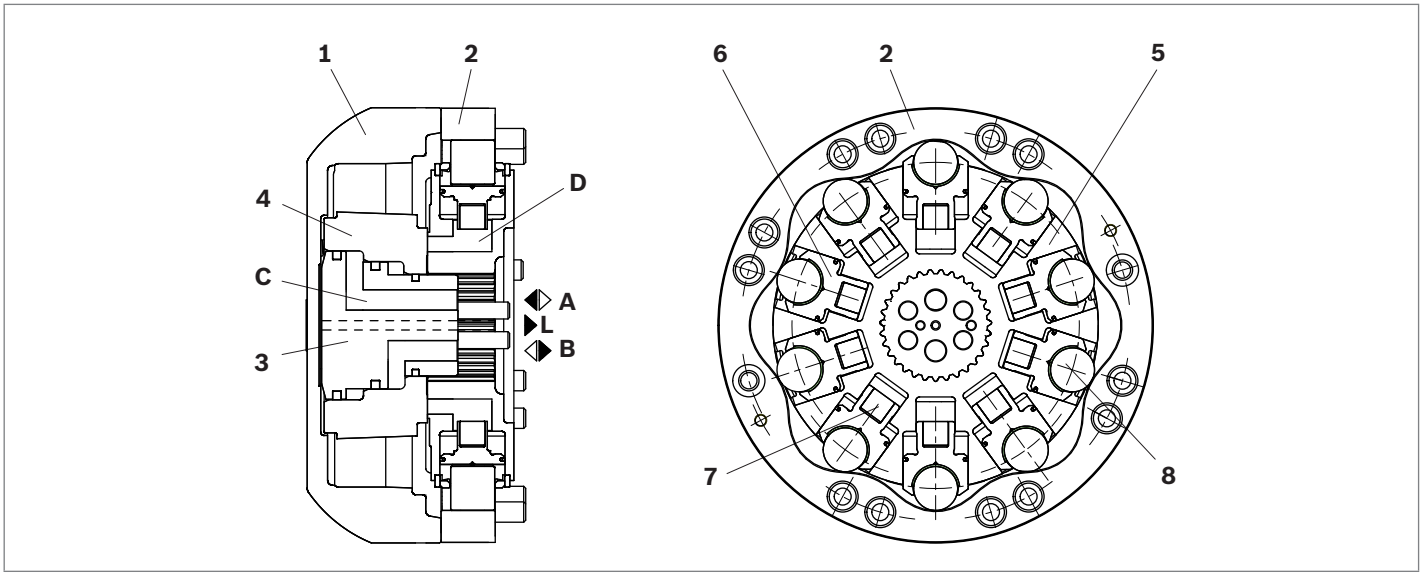

Hydraulic motor type MCR-R is a radial piston motor with a rotating case designed for installation on a vehicle axle to provide hydraulic drive to its wheel.

Construction
Rotating assembly consisting of case (**1**), cam (**2**) and distributor (**4**). Cylinder block (**5**) containing pistons (**6**) fitted with magnets (**7**). Fixed stub axle extension (**3**).

Transmission
The cylinder block (**5**) is splined onto the vehicle's axle. The pistons (**6**) are arranged radially in the cylinder block (**5**) and make contact with the cam (**2**) via rollers (**8**). The extension of the pistons (**6**) acting upon the cam (**2**) drives the rotating assembly which is bolted to the vehicle's wheel hub.

Torque generation

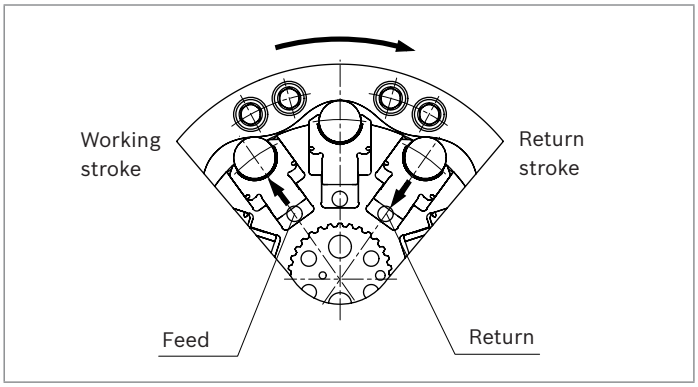

The number of working and return strokes corresponds to the number of lobes on the cam multiplied by number of pistons in the cylinder block.

Flow paths
Ports **A**, **B** and **L** are connected to galleries drilled through the vehicle axle. The galleries in the stub axle extension (**C**) direct the oil via the distributor (**4**) into the cylinder chambers (**D**). The **L** port returns leakage oil from the motor case.

Freewheeling
When not in drive mode the motor is selected to freewheel by relieving ports **A** and **B** to tank and pressurising the case via port **L**. This pushes the pistons back into the cylinder block and holds the rollers clear of the cam. In the event of loss of hydraulic pressure the magnets in the base of each piston (**7**) will hold them in the retracted position.

Motor flushing

In a closed circuit hydraulic system, the same fluid circulates between the pump and the motor. If the system was run under these conditions for any length of time the fluid would soon overheat. To address this the MCR-R has an integral flushing system which allows a controlled flow of fluid to be diverted from the system and back to tank via the system cooling arrangement.
The MCR-R includes features to enable integral flushing in both drive and freewheel modes, flushing during freewheel is of particular importance due to the higher operating speeds.

Flushing during drive

Pressure differential between **A** and **B** will cause the flushing spool (**1**) to shift and connect the low pressure return flow to the flushing poppet (**2**). If the return pressure is above a predetermined level the flushing poppet will open and allow fluid flow to tank via the motor case drain (**L**). The standard setting for the poppet cut off is 14 bar. This is to protect other system functions by closing off flushing flow if system return (charge) pressure drops below this value. The flushing flow rate is determined by the flushing poppet orifice (**3**). Different sizes of orifice are available to vary the flow depending upon system requirements.

Flushing during freewheel

During freewheel, **A** and **B** ports are connected to tank and a fluid flow is applied to the **L** port to pressurise the motor's case and push the pistons back into the cylinder block. Poppets (**4**) will open and permit fluid flow from the case back to tank via the **A** and **B** ports.

▼ **Motor with flushing valve**

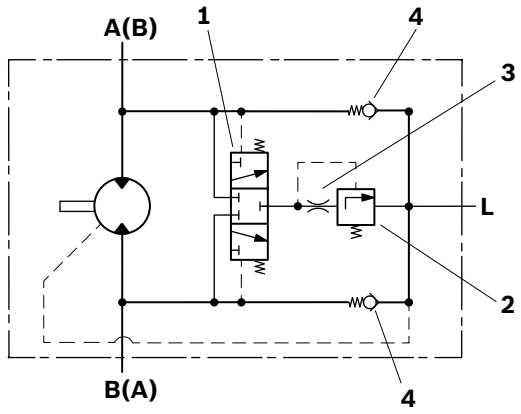

Flushing flow rates

Flushing code	Orifice size (mm)	Flow (l/min) at 25 bar[1)]	
		min	max
F1	Ø1	2.2	2.7
F2	Ø1.5	5.0	6.1
F7	Ø1.7	6.4	7.8
F4	Ø2	8.2	10.7
F6	Ø2.3	8.8	11.4

1) 0.6 mm Shim (Standard), Cracking pressure = 11±3 bar

Ordering code

01	02	03	04	05	06		07	08	09	10	11	12	13
MCR	**10**	**R**		**Z**	**Z**	**/**	**41**	**A0**		**1L**			

Radial piston motor

01	Radial-piston type, low-speed, high-torque motor	**MCR**

Frame size

02	Frame size 10	**10**

Housing type

03	Rotating case hydrobase	**R**

Nominal size, displacement V_g in cm^3/rev

04	Frame size 10		**780**	**1120**
	Low displacement: motors use standard cylindrical pistons	LD	●	–
	High displacement: motors use stepped pistons	HD	–	●

Drive shaft

05	Without drive shaft	**Z**

Through shaft

06	Without through shaft	**Z**

Series

07	Series 41	**41**

Brake

08	Without brake	**A0**

Seals

09	NBR (nitrile rubber)	**M**
	FKM (fluoroelastomer)	**V**

Direction of rotation

10	Viewed from inboard end of stub axle extension, clockwise with flow into port A	**1L**

Flushing

11	Without flushing (no code)	
	With flushing (see table on page 3)	**F1-F7**

Special order

12	Special feature	**SOXXX**

Other

13	Mark in text here	*

● = Available – = Not available

Technical data

Frame size			MCR10R	
Type of mounting			Hydrobase - rotating case	
Pipe connections[1)2)]			Integral to stub axle	
Displacement	V_g	cm³/rev	780	1120
Output torque				
Specific torque (at Δp = 250 bar)		Nm	3100	4520
Maximum torque[3)]	T_{max}	Nm	5580	6420
Output speed				
Minimum speed for smooth running[4)]	n_{min}	rpm	0.5	0.5
Maximum speed[5)6)]	n_{max}	rpm	215	150
Maximum freewheel speed[11)]		rpm	600	600
Pressure				
Operating pressure	p_{nom}	bar	250	250
Maximum differential pressure[3)7)]	Δp_{max}	bar	450	400
Maximum pressure at port "A" or "B"[3)7)]	p_{max}	bar	470	420
Maximum case drain pressure	$p_{case\ max}$	bar	10	10
Operating case pressure	$p_{case\ nom}$	bar	5	5
Weight	m	kg	30	30
Hydraulic fluid				
Fluid type[8)9)]			Mineral oils (HVLP) to DIN 51524-3	
Fluid cleanliness			ISO 4406, Class 20/18/15	
Fluid viscosity range	$\nu_{min/max}$	mm²/s	10 to 2000	
Fluid temperature range[10)]	$\theta_{min/max}$	°C	-20 to +85	

Note

- Motor performance values are based on theoretical calculations.
- Efficiencies are not taken into consideration for theoretical calculations.

Please refer the related foot notes for more details.

1) Ensure motor case is filled with oil prior to start-up.
2) For installation and maintenance details, please see operating manual 15215-01-B
3) Maximum values should only be applied for a small portion of the duty cycle. Please consult Rexroth Engineering. Department in Glenrothes for motor life calculations based on particular operating cases.
4) For continuous operation at speeds <5 rpm please consult Rexroth Engineering Department in Glenrothes.
5) Based on nominal no-load DP of 20 bar
6) Warning! During the running in period of the motor (min. 20 hrs) it should not be run unloaded at >100 rpm.
7) If planning to operate motors in series, please consult Rexroth Engineering Department in Glenrothes.
8) For use with environmentally acceptable fluids HEES, HEPG, HETG, fluoroelastomer / Viton seals must be specified. For further information, please refer to 90221.
9) For use with HF hydraulic fluids please refer to 90229.
10) Extension of the allowable temperature range may be possible depending on specification.
Please consult Rexroth Engineering Department in Glenrothes for further details.
11) For limited time speeds up to 720 rpm may be acceptable.
Please consult Rexroth Engineering at Glenrothes.

Efficiencies

Data applies after a 20 hour run in time and has been established using a typical axle bearing arrangement.

▼ **Mechanical efficiency**

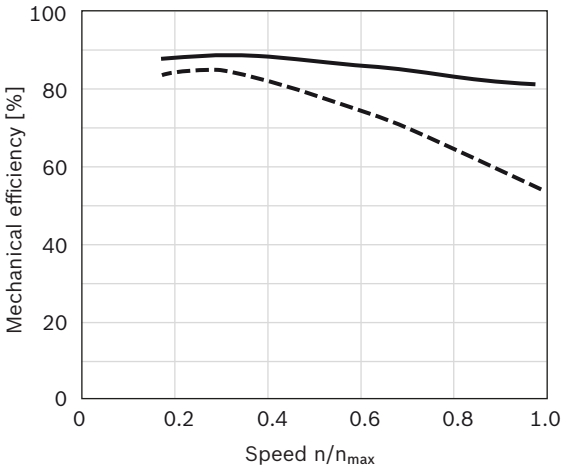

▼ **Volumetric efficiency**

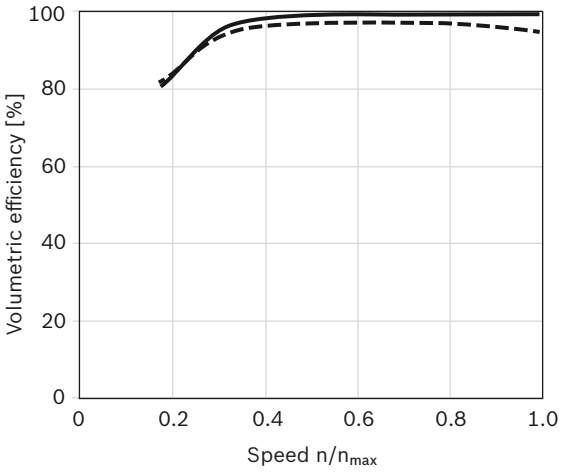

100 bar / 1450 psi
350 bar / 5100 psi

Minimum charge pressure

Value is based on the requirement at the motor stub axle port.

▼ **Minimum charge pressure in pump mode**

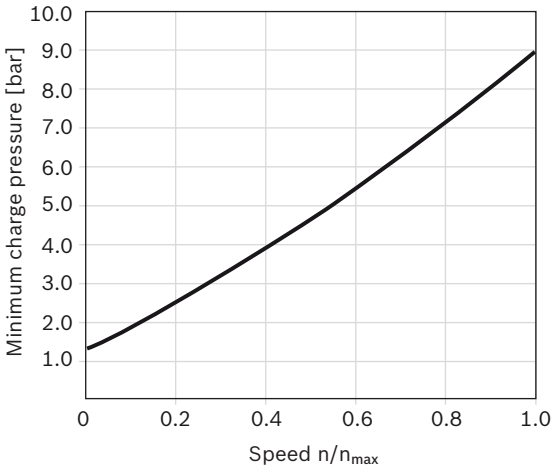

For specific performance information or operating conditions contact the Engineering Department at Bosch Rexroth Glenrothes.

Dimensions

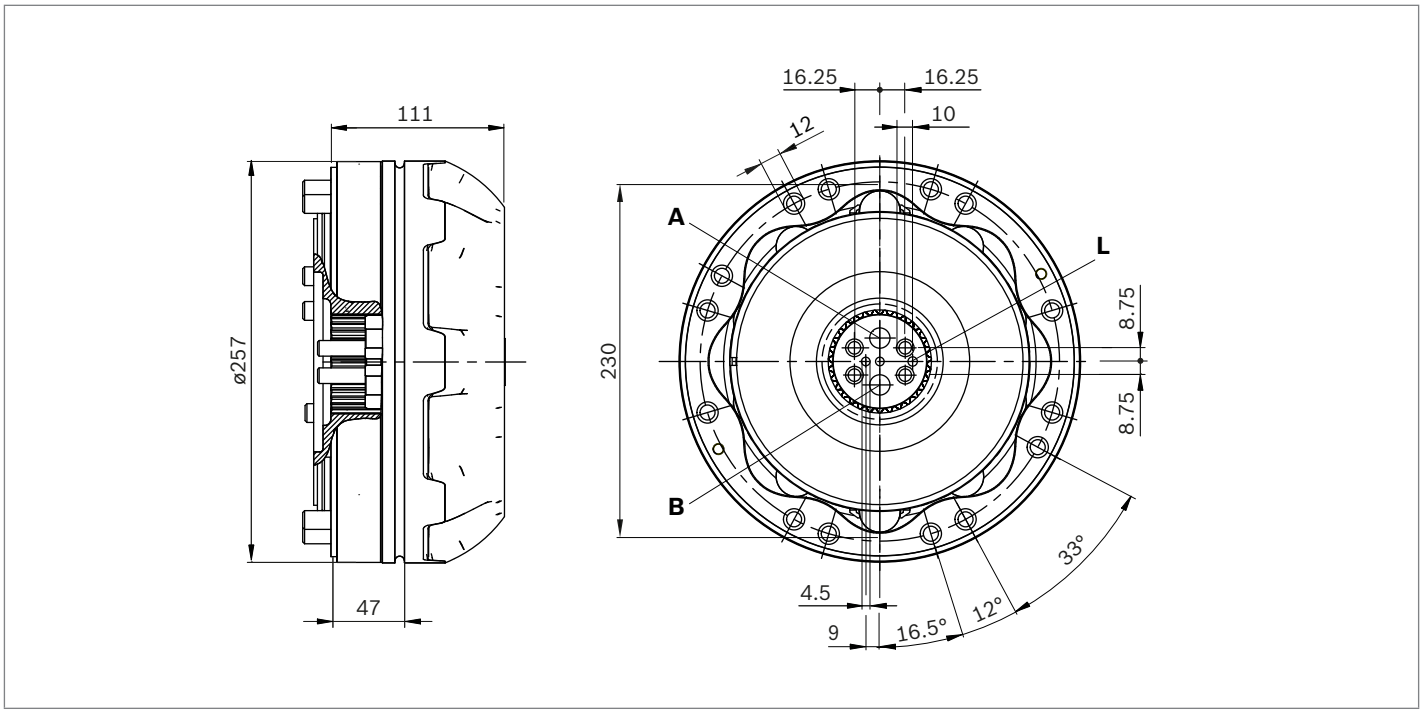

Ports

Designation	Port function	Size	p_{max} [bar]	State[2)]
A, B	Inlet, outlet	ø12	470/420[1)]	O
L	Case drain	ø5	10	O

1) Depending upon displacement

2) O = Must be connected (plugged on delivery)
X = Plugged (in normal operation)

Before finalizing your design, request a binding installation drawing.
Dimensions in mm.

Selection guide

Data sheet	Motor type Application		Frame size 3 160..400 cc	 5 380..820 cc	 6 820..920 cc	 10 780..1340 cc	 15 1130..2150 cc	 20 1750..3000 cc
15198	**MCR-F** Wheel drives		●	●	–	●	●	–
15200	**MCR-W** Heavy duty wheel drives		●	●	–	●	–	–
15195	**MCR-A** Frame integrated drives		●	●	–	●	–	–
15199	**MCR-H** Integrated drives		●	●	–	●	●	●
15221	**MCR-T** Track drives		–	●	●	●	–	–
15223	**MCR-R Series 41** Hydraulic drive assist		–	–	–	●	–	–
15214	**MCR-X** Slew drives		●	●	–	–	–	–
15197	**MCR-C** Compact drives		–	–	–	–	–	●
15196	**MCR-D** Industrial applications		●	●	–	●	–	–
	MCR-E Industrial applications		–	●	–	–	–	–

Radial piston motor for track drives
MCR-T

Features

- Compact robust construction
- High brake capacity
- High volumetric and mechanical efficiencies
- High pressure rating
- High reliability
- High bearing life
- Low maintenance
- Smooth running at very low speeds
- Low noise
- Freewheeling possible
- Available with
  - Integrated parking brake
  - Bi-directional two speed
  - Integrated flushing valve
  - Speed sensor

- Frame size MCR5, MCR6, MCR10
- Displacement 620cc to 1340cc
- Differential pressure up to 400 bar
- Torque output up to 8530 Nm
- Speed up to 305 rpm
- Open and closed circuits

Contents

Functional description	2
Ordering code	6
Technical data	8
Dimensions	10
Selection guide	11

RE 15221/07.2010, Bosch Rexroth AG

Functional description

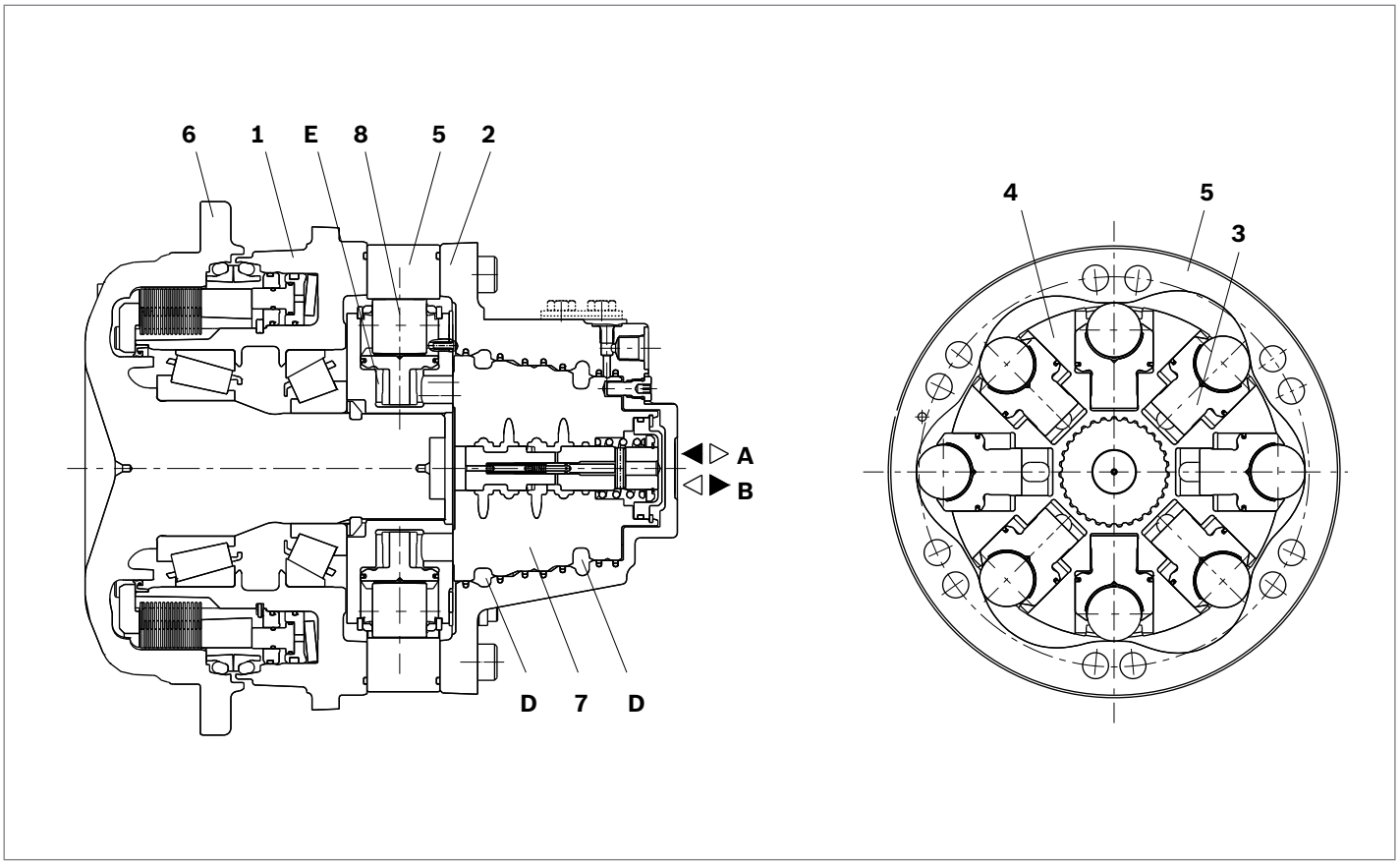

Hydraulic motors of the type MCR-T are radial piston motors with front case mounting and flanged shaft. They are specially designed for track drive applications and are primarily used as drive motors on skid-steer loaders and compact track loaders.
The MCR-T type motor can be used in open as well as closed hydraulic circuits.

Construction
Two part housing (**1**, **2**), rotary group (**3**, **4**, **8**), cam (**5**), drive shaft (**6**) and flow distributor (**7**)

Transmission
The cylinder block (**4**) is connected to the shaft (**6**) by means of splines. The pistons (**3**) are arranged radially in the cylinder block (**4**) and make contact with the cam (**5**) via rollers (**8**).

Torque generation

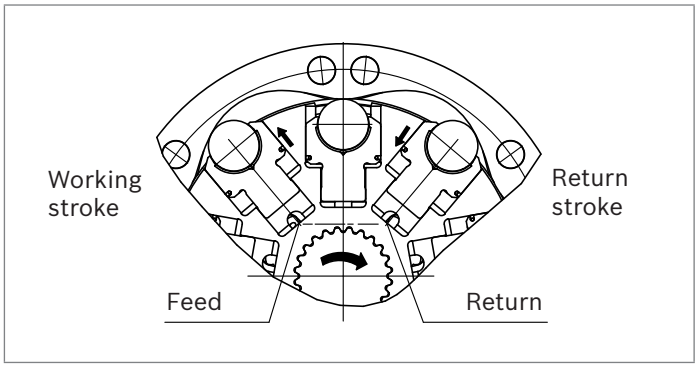

The number of working and return strokes corresponds to the number of lobes on the cam multiplied by number of pistons in the cylinder block.

Flow paths

The ports **A** and **B**, which are located in the rear case, carry oil through the distributor to the cylinder chambers (**E**).

Bearings

Tapered roller bearings capable of transmitting high axial and radial forces are fitted as standard.

Freewheeling

In certain applications there may be a requirement to freewheel the motor. This may be achieved by connecting ports **A** and **B** to zero pressure and simultaneously applying a pressure of 2 bar to the housing through port **L**. In this condition, the pistons are forced into the cylinder block which forces the rollers to loose contact with the cam thus allowing free rotation of the shaft.

Two speed operation (2W)

In mobile applications where vehicles are required to operate at high speed with low motor loads, the motor can be switched to a low-torque and high-speed mode. This is achieved by operating an integrated valve which directs hydraulic fluid to only one half of the motor while continuously re-circulating the fluid in the other half. This “reduced displacement” mode reduces the flow required for a given speed and gives the potential for cost and efficiency improvements. Maximum rated speed of the motor remains unchanged.

Bosch Rexroth has developed a special spool valve to allow smooth switching to reduced displacement whilst on the move. This is known as “soft-shift” and is a standard feature of 2W motors. The spool valve requires either an additional sequence valve or electro-proportional control to operate in “soft-shift” mode. Alternatively, enhanced soft-shifting via software control primarily for Compact Track Loader applications is now available from Bosch Rexroth.

▼ **Two-speed motor**

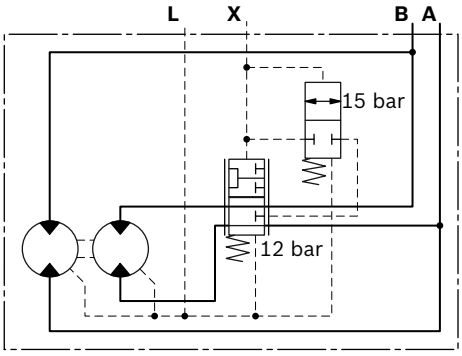

Note

2W can not be used in open circuit.

Flushing valve

In a closed circuit, the same hydraulic fluid continuously flows between the pump and the motor. This could therefore lead to overheating of the hydraulic fluid.
The function of the flushing valve option is to replace hydraulic fluid in the closed circuit with that from the reservoir. When the hydraulic motor is operated under load, either in the clockwise or counter-clockwise direction, the flushing valve opens and allows a fixed flow of fluid through an orifice from the low pressure side of the circuit. This flow is then fed to the motor housing and back to the reservoir normally via a cooler. In order to charge the low pressure side of the circuit, cold fluid is drawn from the reservoir by the boost pump and is fed to the pump inlet through the check valve. Thus the flushing valve ensures a continuous renewal and cooling of the hydraulic fluid. The flushing feature incorporates a relief valve which is used to maintain a minimum boost pressure and operates at a standard setting of 14 bar (other options available on request). Different orifice sizes may be used to select varying flows of flushing fluid. The following table gives flushing rate values based on a boost / charge pressure of 25 bar.

▼ **Motor with flushing valve**

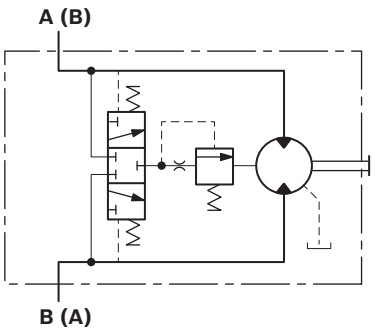

Flushing flow rates

Flushing code	Orifice size (mm)	Flow (l/min) at 25 bar[1)]	
		min	max
F1	Ø1	2.2	2.7
F2	Ø1.5	5.0	6.1
F7	Ø1.7	6.4	7.8
F4	Ø2	8.2	10.7
F6	Ø2.3	8.8	11.4

1) 0.6 mm Shim (Standard), Cracking pressure = 11±3 bar

Holding brake (multi-disc brake)

Mounting

The MCR T-type motor has a spring applied pressure released holding brake integrated into the front of the motor.

Brake application

As a safety requirement in mobile applications a parking brake is provided to ensure that the motor cannot turn when the machine is not in use. The parking brake provides holding torque by means of discs that are compressed by a disc spring. The brake is released when oil pressure is applied to brake port "**Z**" and the pressure in the annular area compresses the disc spring allowing the brake discs to turn independently.

Note
This brake is provided solely for static use - not to be used dynamically.

▼ **Schematic diagrams**

Motor without brake	Motor with holding brake
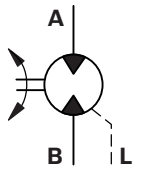	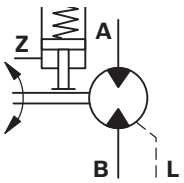

Speed sensor

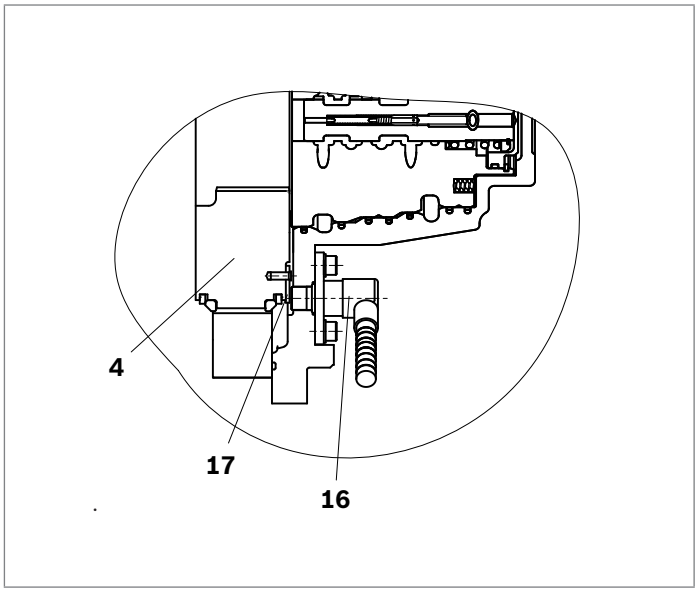

A Hall-effect speed sensor (**16**) may be fitted as an option, giving a two-channel output of phase-displaced square waves, and enabling detection of speed and direction. A toothed target disc (**17**) is fitted to the motor cylinder block (**4**), and the sensor, fitted to a port in the rear case, produces a pulse on each channel as each tooth passes in front of it. The frequency of the pulses is proportional to the rotational speed.
Versions are available for use with regulated supplies 10 V (Code P1) and for direct connection to a 12 V or 24 V unregulated supply (Code P2).
The motor can also be supplied fitted with a target disc and with a speed sensor port machined, but covered and sealed with a blanking plate (Code P0). These “sensor-ready” motors may be fitted with a sensor at a later date.

Direction of shaft rotation with flow
(viewed from drive shaft)

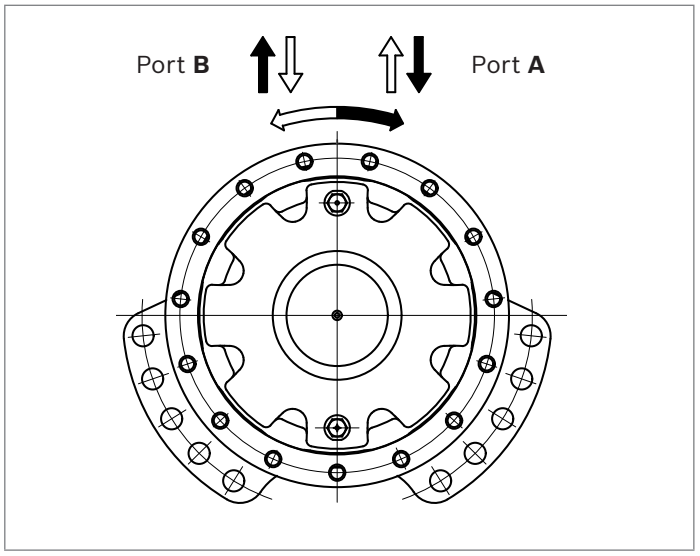

6

Ordering code

01	02	03	04	05	06		07	08	09	10	11	12	13	14	15
MCR		**T**			**Z**	**/**	**33**		**V**						

Radial piston motor

01	Radial-piston type, low-speed, high-torque motor	**MCR**

Frame size

02	Frame size	5	**5**
		6	**6**
		10	**10**

Housing type

03	Front case flanged	**T**

Nominal size, displacement V_g in cm^3/rev

04	Frame size 5					
			620	**680**	**750**	**820**
	High displacement: motors use stepped pistons	HD	●	●	●	●
	Frame size 6					
					820	**920**
	High displacement: motors use stepped pistons	HD			●	●
	Frame size 10					
			1070	**1120**	**1180**	**1340**
	High displacement: motors use stepped pistons	1L	●	●	–	–
	High displacement: motors use stepped pistons	2W	●	●	●	●

Drive shaft

05	With flange ø284 mm (only available with MCR5T and MCR6T)	**F284**
	With flange ø315 mm (only available with MCR10T)	**F315**

Through shaft

06	Without through shaft	**Z**

Series

07	Series 33	**33**

Brake

08	Hydraulic release spring applied multi-disc holding brake 4500 Nm	**B5**
	Hydraulic release spring applied multi-disc holding brake 7000 Nm (only available with MCR10T)	**B7**

Seals

09	FKM (fluoroelastomer / Viton)	**V**

Single/two-speed operation

10	Single speed, standard direction of rotation	**1L**
	Bi-directional two speed, standard direction of rotation	**2WL**

Ports

11	Tapped with UNF thread (SAE J514) (only available with MCR5T and MCR6T)	**12**
	Tapped with UNF thread (SAE J514) (A & B ports SAE split flange metric bolt holes) (only available with MCR10T)	**48**

● = Available – = Not available

01	02	03	04	05	06		07	08	09	10	11	12	13	14	15
MCR		**T**			**Z**	**/**	**33**		**V**						

Studs

12	Without studs (no code)	

Speed sensor

13	Without sensor (no code)	
	Sensor ready	**P0**
	Sensor without regulator	**P1**
	Sensor with regulator	**P2**

Flushing

14	Without flushing (no code)	
	With flushing (see table on page 3)	**F1-F7**

Special order

15	Special feature	**SOXXX**

R_15_21_07_2013 Bosch Rexroth AG

Technical data

Frame size			MCR5T	MCR6T	MCR10T
Description			Radial-piston type, low-speed, high-torque motor		
Type of mounting			Flange mounting		
Pipe connections[1)2)]			Threaded per SAE J514; Flanged per SAE J518		
Weight					
Single speed (1L)	m	kg	58	60	84
Two speed (2WL)	m	kg	63	66	93
Two speed ratio[3)]					
Full displacement			1:1	1:1	1:1
Reduced displacement			1:2	2:3	1:2
Hydraulic fluid[4)]					
Fluid type			Mineral oils (HLP) to DIN 51524		
Fluid cleanliness			ISO 4406, Class 20/18/15		
Fluid viscosity range	$v_{min/max}$	mm^2/s	10 to 2000		
Fluid temperature range[5)]	$\theta_{min/max}$	°C	–20 to +115		
Pressure			High displacement		
Operating pressure	p_{nom}	bar	250		
Maximum differential pressure[6)7)]	Δp_{max}	bar	400		
Maximum pressure at port **A** or **B**[6)7)]	p_{max}	bar	420		
Maximum case drain pressure	$p_{case\ max}$	bar	10		

Footer see page 9

Motor perfomance MCR5T	**Size**		**620**	**680**	**750**	**820**
Displacement	V_g	cm³/rev	620	680	750	820
Specific torque		Nm/bar	10	11	12	13
Maximum torque[6)12)]	T_{max}	Nm	3947	4329	4775	5220
Minimum speed for smooth running[8)]	n_{min}	rpm	0.5	0.5	0.5	0.5
Maximum speed 1L[9)10)]	n_{max}	rpm	250	250	230	210
Maximum speed 2WL[9)10)]	n_{max}	rpm	250	250	250	230
Motor performance MCR6T	**Size**		**820**	**920**		
Displacement	V_g	cm³/rev	820	920		
Specific torque		Nm/bar	13	15		
Maximum torque[6)12)]	T_{max}	Nm	5220	5857		
Minimum speed for smooth running[8)]	n_{min}	rpm	0.5	0.5		
Maximum speed 1L[9)10)]	n_{max}	rpm	230	205		
Maximum speed 2WL[9)10)]	n_{max}	rpm	250	250		
Motor performance MCR10T	**Size**		**1070**	**1120**	**1180**	**1340**
Displacement	V_g	cm³/rev	1070	1120	1180	1340
Specific torque		Nm/bar	17	18	19	21
Maximum torque[6)12)]	T_{max}	Nm	6812	7130	7512	8531
Minimum speed for smooth running[8)]	n_{min}	rpm	0.5	0.5	0.5	0.5
Maximum speed 1L[9)10)]	n_{max}	rpm	185	180	170	150
Maximum speed 2WL[9)10)]	n_{max}	rpm	240	240	235	205
Holding brake (disc brake)	**Size**		**B5**	**B7**		
Minimum holding torque	$T_{min/max}$	Nm	4500	7000		
Release pressure (min)[13)]	$P_{rel\ min}$	bar	12	10		
Release pressure (max)[13)]	$P_{rel\ max}$	bar	15	15		
Maximum pressure at brake port “Z“	P_{max}	bar	40	40		
Oil volume to operate brake	V_{rel}	cm³	20	22		

Footer from page 8 and 9

1) Ensure motor case is filled with oil prior to start-up.
2) For installation and maintenance details, please see operating manual 15215-B.
3) Other displacements and ratios contact Bosch Rexroth.
4) For use with environmentally acceptable fluids HEES, HEPG, HETG, fluoroelastomer / Viton seals must be specified.
5) Extension of the allowable temperature range may be possible depending on specification. Please consult Bosch Rexroth Engineering Department in Glenrothes for further Details.
6) Maximum values should only be applied for a small portion of the duty cycle. Please consult Bosch Rexroth Engineering Department in Glenrothes for motor life calculations based on particular operating cases.
7) When operating motors in series, please consult Bosch Rexroth Engineering Department in Glenrothes.
8) For continuous operation at speeds <5 rpm please consult Bosch Rexroth Engineering Department in Glenrothes.
9) Based on nominal no-load Δp of 20 bar in full- displacement mode.
10) Warning! During the running in period of the motor (min. 20 hrs) it should not be run unloaded at >100 rpm.
11) Guide values for up to 5000 hours of motor operation (ISO VG46 and 50°).
12) Low displacement = 450 bar, high displacement = 400 bar
13) At 0 bar case pressure, the quoted brake release pressure is over and above any case pressure present.

Note

- Motor performance values all based on theoretical calculations.
- Efficiencies not taken into consideration for theoretical calculations.
- Brake torque accounts for tolerances.
  Please refer the related foot notes for more details.

Dimensions

MCR5, MCR6

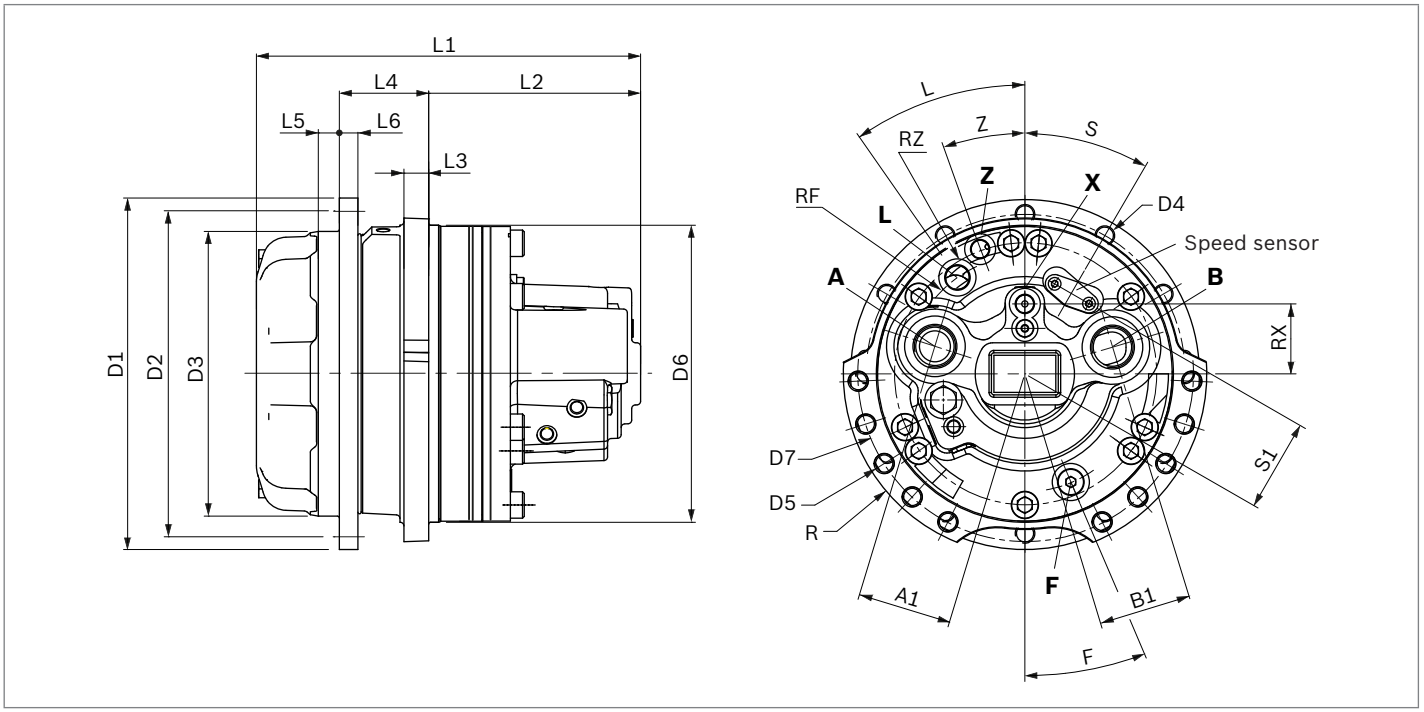

Motor	D1	D2	D3	D4	D5	D6	D7	R	L	S	Z	F
MCR5T1L	ø284	ø260	ø230	M16	ø17.5	ø240	ø322.58	148	36.5°	25°	20.7°	23°
MCR5T2WL	ø284	ø260	ø230	1/2-13 UNC 2B	ø16.5	ø230	ø264	148	30°	30°	6.5°	23°
MCR6T1L	ø284	ø260	ø230	1/2-13 UNC 2B	ø17.5	ø240	ø322.58	176.5	35°	–	19.8°	23°
MCR6T2WL	ø284	ø260	ø230	M16	ø16.5	ø240	ø272	148	35°	30°	19.8°	23°

Motor	L1	L2	L3	L4	L5	L6	RX	RZ	RF	A1	B1	S1
MCR5T1L	270	130.8	20	72.2	17	15	–	R101.5	R90	76	74	75
MCR5T2WL	310.4	171.2	20	72.2	17	15	56.5	R101	R90	76	74	75
MCR6T1L	270	130.8	20	72.2	17	15	–	R107	R95	76	74	–
MCR6T2WL	310.4	171.2	20	72.2	17	15	56.5	R107	R95	76	74	75

Ports

Designation	Port function	Ordering code 12	Size	Ordering code 48[1]	Size[1]	Maximum pressure [bar]	State[2]
A, B	Inlet, outlet	SAE J514	1 5/16-12 UN	SAE J518	3/4 in	420	O
L	Case drain	SAE J514	3/4-16 UNF	SAE J514	3/4-16 UNF	10	O
X	2 speed port	SAE J514	9/16-18 UNF	SAE J514	9/16-18 UNF	30	O
Z	Brake port	SAE J514	9/16-18 UNF	SAE J514	9/16-18 UNF	40	O
F	Filler port	SAE J514	3/4-16 UNF	SAE J514	3/4-16 UNF	10	X

1) Applicable to MCR10T only

2) O = Must be connected (plugged on delivery)
X = Plugged (in normal operation)

Before finalizing your design, request a binding installation drawing.

Dimensions

MCR10

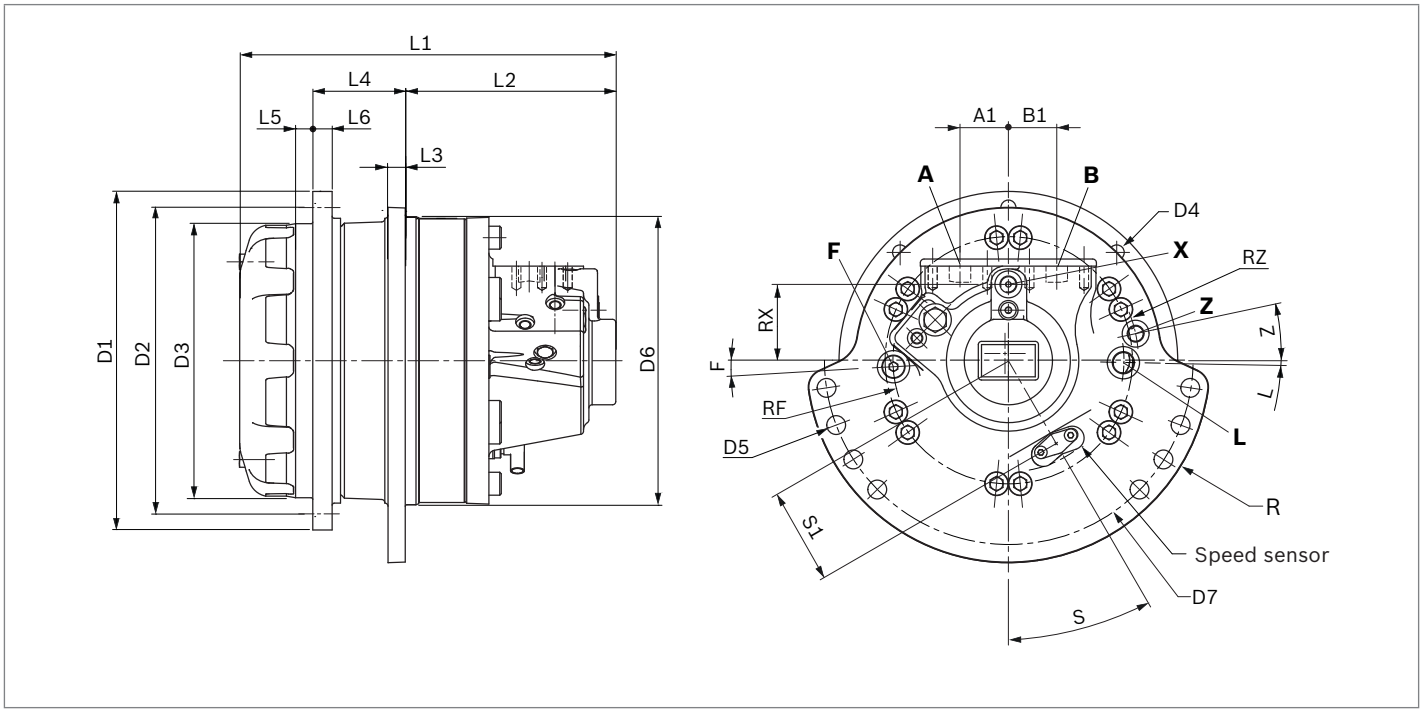

Motor	D1	D2	D3	D4	D5	D6	D7	R	L	S	Z	F
MCR10T1L	ø315	ø285	ø255	5/8-11 UNC 2	ø17.5	ø268	ø342	187.5	3°	–	10°	3°
MCR10T2WL	ø315	ø285	ø255	M16	ø17.5	ø268	ø342	187.5	1°	30°	12°	3°

Motor	L1	L2	L3	L4	L5	L6	RX	RZ	RF	A1	B1	S1
MCR10T1L	293.5	139.5	16	86	16	18	–	R121	R107	45	45	–
MCR10T2WL	349.8	195.8	16	86	16	18	71	R121	R107	45	45	89

Ports

Designation	Port function	Ordering code 12	Size	Ordering code 48[1)]	Size[1)]	Maximum pressure [bar]	State[2)]
A, B	Inlet, outlet	SAE J514	1 5/16-12 UN	SAE J518	3/4 in	420	O
L	Case drain	SAE J514	3/4-16 UNF	SAE J514	3/4-16 UNF	10	O
X	2 speed port	SAE J514	9/16-18 UNF	SAE J514	9/16-18 UNF	30	O
Z	Brake port	SAE J514	9/16-18 UNF	SAE J514	9/16-18 UNF	40	O
F	Filler port	SAE J514	3/4-16 UNF	SAE J514	3/4-16 UNF	10	X

1) Applicable to MCR10T only

2) O = Must be connected (plugged on delivery)
X = Plugged (in normal operation)

Before finalizing your design, request a binding installation drawing.

6

Selection guide

Data sheet	Motor type Application		Frame size 3 160..400 cc	 5 380..820 cc	 6 820..920 cc	 10 780..1340 cc	 15 1130..2150 cc	 20 1750..3000 cc
15198	**MCR-F** Wheel drives		●	●	–	●	●	–
15200	**MCR-W** Heavy duty wheel drives		●	●	–	●	–	–
15195	**MCR-A** Frame integrated drives		●	●	–	●	–	–
15199	**MCR-H** Integrated drives		●	●	–	●	●	●
15221	**MCR-T** Track drives		–	●	●	●	–	–
15223	**MCR-R Series 41** Hydraulic drive assist		–	–	–	●	–	–
15214	**MCR-X** Slew drives		●	●	–	–	–	–
15197	**MCR-C** Compact drives		–	–	–	–	–	●
15196	**MCR-D** Industrial applications		●	●	–	●	–	–
	MCR-E Industrial applications		–	●	–	–	–	–

Radial piston motor for heavy duty wheel drives
MCR-W

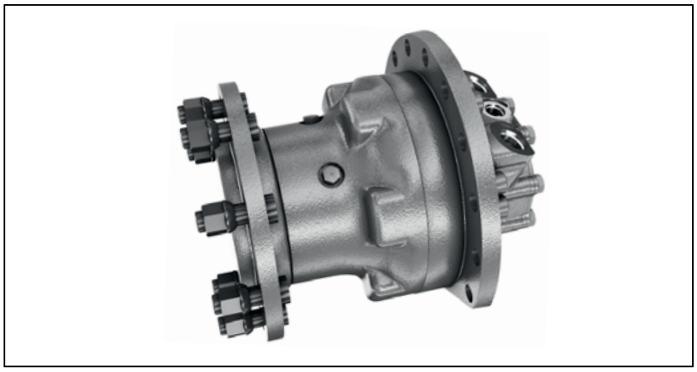

- Frame size MCR3, MCR5, MCR10
- Displacement 160 cc to 1340 cc
- Differential pressure up to 450 bar
- Torque output up to 8530 Nm
- Speed up to 875 rpm
- Open and closed circuits

Features

- Compact robust construction
- High volumetric and mechanical efficiencies
- Rear case mount
- Wheel flange with wheel studs
- High reliability
- Low maintenance
- Smooth running at very low speeds
- Low noise
- Bi-directional
- Sealed tapered roller bearings
- High radial forces permitted on drive shaft
- Freewheeling possible
- Available with:
  - Holding brake (multi-disc), dynamic (drum) brake or Dynamic (disc) brake
  - Bi-directional two speed
  - Integrated flushing valve
  - Speed sensor

Contents

Functional description	2
Ordering code	6
Technical data	8
Efficiencies	10
Permitted loading on drive shaft	11
Dimensions	12
Selection guide	16

RE 15200/09.2012, Bosch Rexroth AG

Functional description

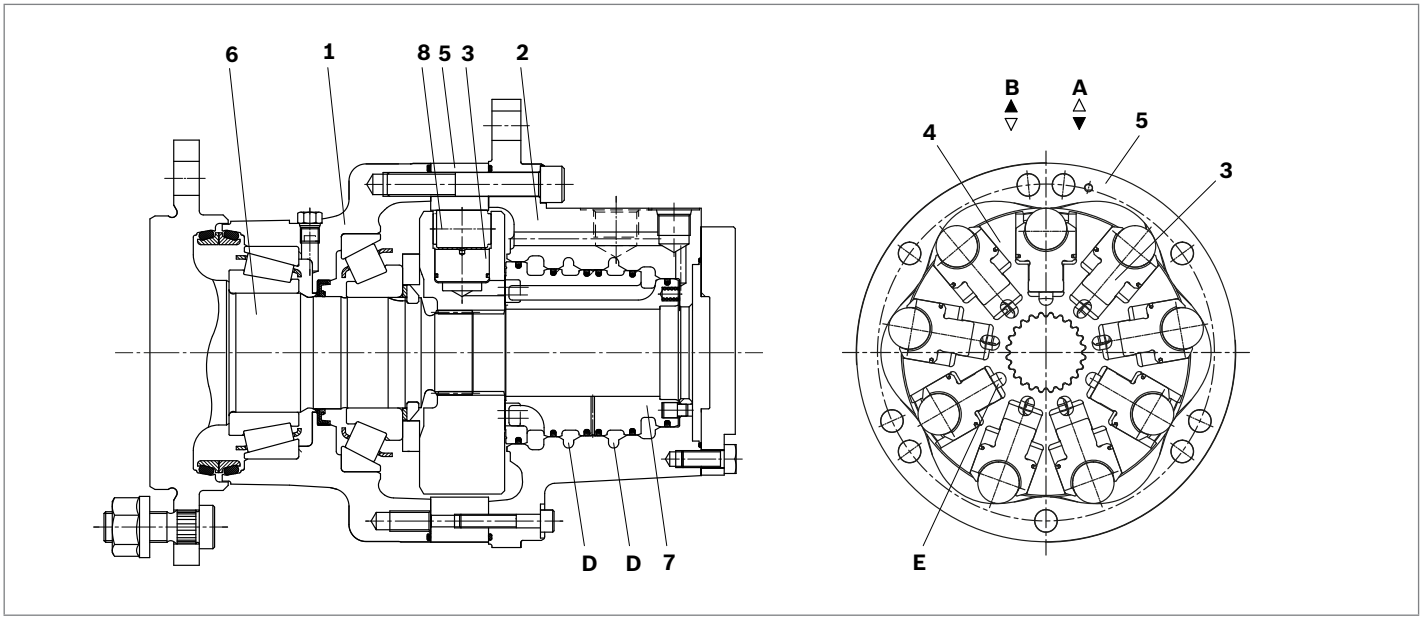

Hydraulic motors of the type MCR-W are radial piston motors with rear case mounting and wheel flange shaft. The MCR-W motors are intended for wheel drives in open or closed circuits. They are specially designed to withstand the most demanding conditions in different applications such as; Fork lift trucks, agricultural and forestry machines. Fitted with stronger shaft and bearings, the MCR-W provides 60 percent increase in radial load capacity compared to standard radial piston motors. The integrated wheel flange with studs allows easy installation of standard wheel rims.

Construction
Two part housing (**1**, **2**), rotary group (**3**, **4, 8**), cam (**5**), drive shaft (**6**) and flow distributor (**7**)

Transmission
The cylinder block (**4**) is connected to the shaft (**6**) by means of splines. The pistons (**3**) are arranged radially in the cylinder block (**4**) and make contact with the cam (**5**) via rollers (**8**).

Torque generation

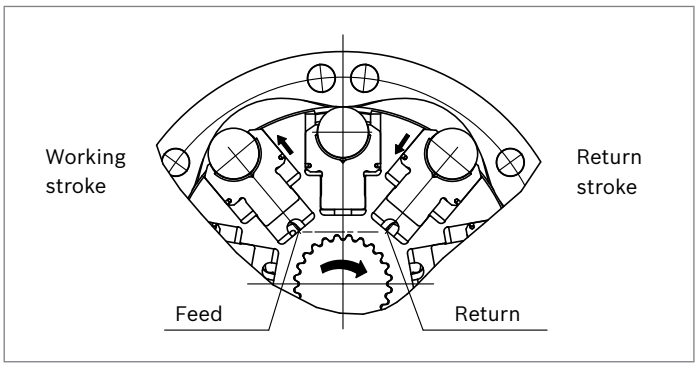

The number of working and return strokes corresponds to the number of lobes on the cam multiplied by number of pistons in the cylinder block.

Flow paths
The ports **A** and **B**, which are located in the rear case, carry oil through the distributor to the cylinder chambers (**E**).

Bearings
Tapered roller bearings capable of transmitting high axial and radial forces are fitted as standard.

Freewheeling
In certain applications there may be a requirement to freewheel the motor. This may be achieved by connecting ports **A** and **B** to zero pressure and simultaneously applying a pressure of 2 bar to the housing through port **L**. In this condition, the pistons are forced into the cylinder block which forces the rollers to lose contact with the cam thus allowing free rotation of the shaft.

Two speed operation (2W)

In mobile applications where vehicles are required to operate at high speed with low motor loads, the motor can be switched to a low-torque and high-speed mode. This is achieved by operating an integrated valve which directs hydraulic fluid to only one half of the motor‘s rotary group. This “reduced displacement” mode reduces the flow required for a given speed and gives the potential for cost and efficiency improvements. The motor maximum speed remains unchanged.

Bosch Rexroth has developed a special spool valve to allow smooth switching to reduced displacement whilst on the move. This is known as “soft-shift” and is a standard feature of 2W motors. The spool valve requires either an additional sequence valve or electro-proportional control to operate in “soft-shift” mode.

▼ **Schematic**

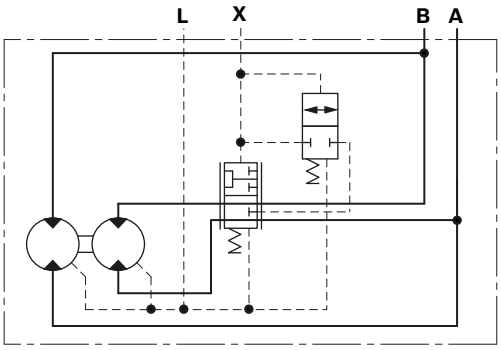

Flushing valve

In a closed circuit, the same hydraulic fluid continuously flows between the pump and the motor. This could therefore lead to overheating of the hydraulic fluid.

The function of the flushing valve option is to replace hydraulic fluid in the closed circuit with that from the reservoir. When the hydraulic motor is operated under load, either in the clockwise or anti-clockwise direction, the flushing valve opens and takes a fixed flow of fluid through an orifice from the low pressure side of the circuit. This flow is then fed to the motor housing and back to the reservoir normally via a cooler. In order to charge the low pressure side of the circuit, cool fluid is drawn from the reservoir and is fed to the pump inlet. Thus the flushing valve ensures a continuous renewal and cooling of the hydraulic fluid. The flushing feature incorporates a relief valve which is used to maintain a minimum boost pressure (options available, see data sheet 15225-01).

Different orifice sizes may be used to adjust the flushing flow to the application‘s requirements. See data sheet 15225-01 for more details and available options.

▼ **Schematic**

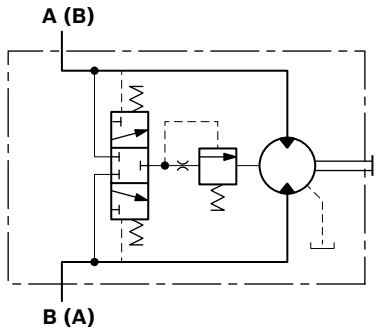

Holding brake (multi-disc brake)

Mounting
By way of rear housing (**2**) and brake shaft (**14**).

Brake application
As a safety requirement in mobile applications a parking brake may be provided to ensure that the motor cannot turn when the machine is not in use. The parking brake provides holding torque by means of discs (**11**) that are compressed by a disc spring (**10**). The brake is released when oil pressure is applied to brake port "**Z**" and the pressure in the annular area (**9**) compresses the disc spring using brake piston (**12**) thus allowing the brake discs (**11**) to turn independently.

Note
This brake is provided solely for static use - not to be used dynamically.

▼ **Schematic diagrams**

Motor without brake	Motor with holding brake	Motor with dynamic brake
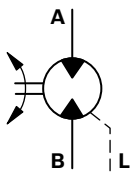	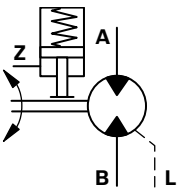	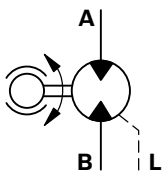

Manual release of holding brake
The brake may also be released manually by loosening screws (**13**).

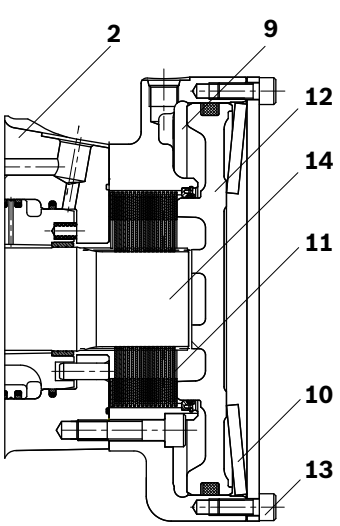

Dynamic brake
Where mechanical dynamic braking is required, a drum brake or disc brake may be specified.

Drum brake
The drum brake is mounted directly onto the drive shaft (**6**) and front housing (**1**). Braking torque is provided by brake shoes acting on the inside of the drum. For dynamic braking the shoes are operated by a hydraulic cylinder, the shoes can also be operated mechanically by a cable to provide a static parking brake function.

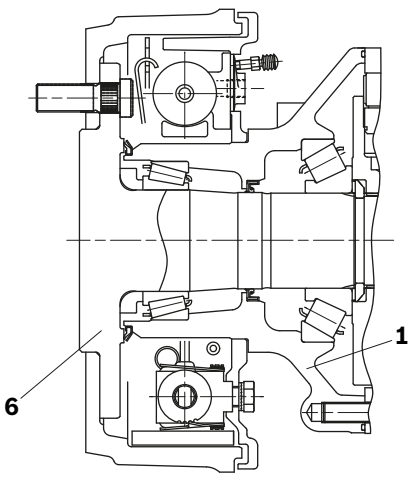

Caliper disc brake
In applications where a more responsive dynamic brake is required a Caliper Disc Brake may be specified. The disc is mounted directly onto the shaft flange (**6**), the caliper is mounted on the motor front case via a caliper mounting bracket (**1**). Braking torque is provided by caliper acting on the disc. Other advantages of the Caliper Disc brake include greater reliability, faster response and less maintenance.

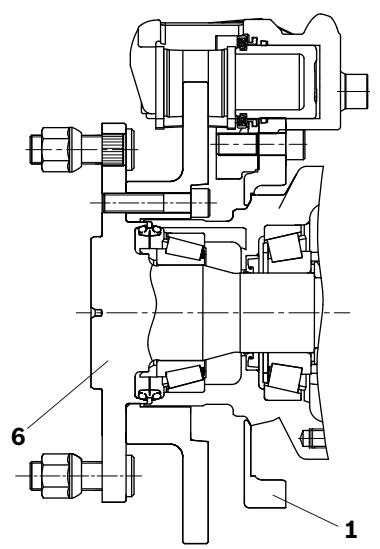

Speed sensor

A Hall-effect speed sensor (**16**) may be fitted as an option, giving a two-channel output of phase-displaced square waves, and enabling detection of speed and direction. A toothed target disc (**17**) is fitted to the motor cylinder block (**4**), and the sensor, fitted to a port in the rear case, produces a pulse on each channel as each tooth passes in front of it. The frequency of the pulses is proportional to the rotational speed.

Versions are available for use with regulated supplies 10 V (Code P1) and for direct connection to a 12 V unregulated supply (Code P2).

The motor can also be supplied fitted with a target disc and with a speed sensor port machined, but covered and sealed with a blanking plate (Code P0). These “sensor-ready” motors may be fitted with a sensor at a later date.

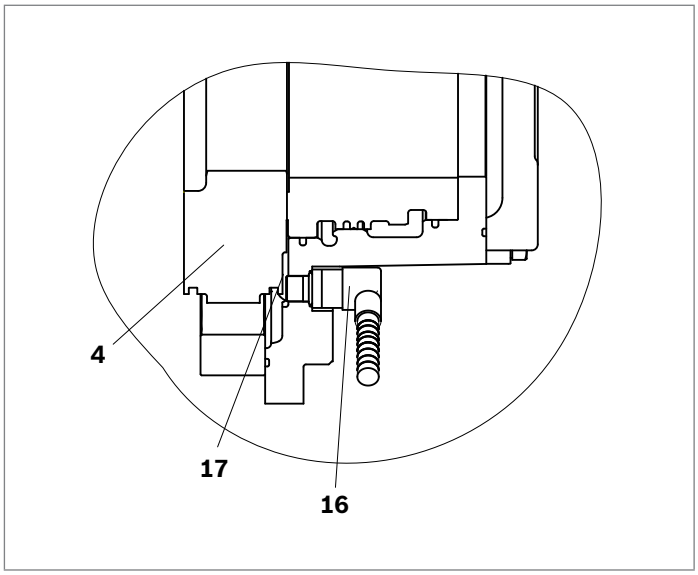

Direction of shaft rotation with flow

(viewed from drive shaft)

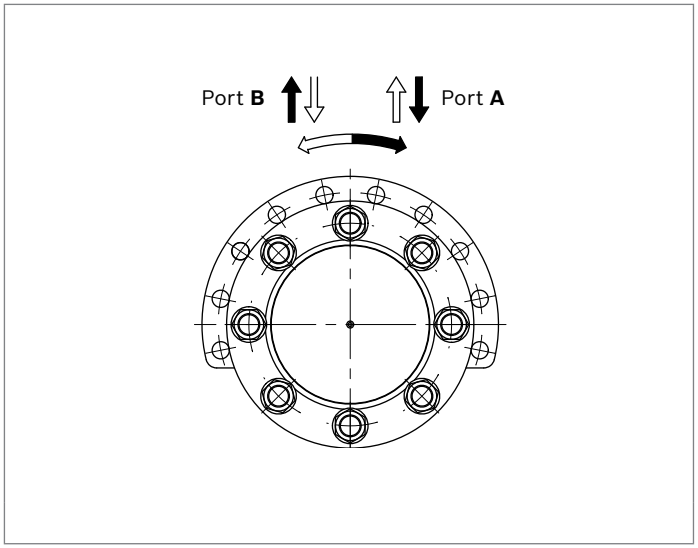

Ordering code

01	02	03	04	05	06		07	08	09	10	11	12	13	14	15	16
MCR		**W**			**Z**	**/**	**33**									

Radial piston motor

01	Radial-piston type, low-speed, high-torque motor	**MCR**

Frame size

02	Frame size	3	**3**
		5	**5**
		10	**10**

Housing type

03	High radial load bearings fitted, rear case mounting flange	**W**

Nominal size, displacement V_g in cm^3/rev

04	Frame size 3		**160**	**225**	**255**	**280**	**325**	**365**	**400**	
	Low displacement: motors use standard cylindrical pistons	LD	●	●	●	●	–	–	–	
	High displacement: motors use stepped pistons	HD	–	–	–	–	●	●	●	
	Frame size 5		**380**	**470**	**520**	**565**	**620**	**680**	**750**	**820**
	Low displacement: motors use standard cylindrical pistons	LD	●	●	●	●	–	–	–	–
	High displacement: motors use stepped pistons	HD	–	–	–	–	●	●	●	●
	Frame size 10		**780**	**860**	**940**	**1120**	**1250**	**1340**		
	Low displacement: motors use standard cylindrical pistons	LD	●	●	●	–	–	–		
	High displacement: motors use stepped pistons	HD	–	–	–	●	●	●		

Drive shaft

			MCR3	MCR5	MCR10	
05	With flange ø180 mm		●	–	–	**F180**
	With flange ø250 mm		–	●	–	**F250**
	With flange ø280 mm		–	–	●	**F280**

Rear shaft

06	Without rear shaft	**Z**

Series

07	Serie 33	**33**[1)]

Brake

			MCR3	MCR5	MCR10	
08	Without brake		●	●	●	**A0**
	Hydraulic release spring applied multi-disc holding brake	2200 Nm	●	●	–	**B2**
		4400 Nm	–	●	–	**B4**
		4400 Nm	–	–	●	**B5**
		7000 Nm	–	–	●	**B7**
	Dynamic brake (drum-brake) with maximum torque	4000 Nm	●	–	–	**C4L/R**
		6400 Nm	–	–	●	**C7L/R**
		12000 Nm	–	–	●	**C12L/R**
	Dynamic brake (disc-brake) with maximum torque	3700 Nm	●	–	–	**S4L/R**

Seals

09	NBR (nitrile rubber)	**M**
	FKM (fluoroelastomer / Viton)	**V**

● = Available – = Not available

01	02	03	04	05	06		07	08	09	10	11	12	13	14	15	16
MCR		**W**			**Z**	**/**	**33**									

Single/two-speed operation

10	Single speed, standard direction of rotation	**1L**
	Bi-directional two speed, standard direction of rotation[1)]	**2WL**

Ports

11	Tapped with UNF thread (SAE J514)	**12**
	Tapped with UNF thread (SAE J514) (A and B ports SAE split flange metric holes)	**42**

Studs

12	Without studs (no code)	
	With wheel studs and nuts	**S**

Speed sensor

13	Without sensor (no code)	
	Sensor ready	**P0**
	Sensor without regulator	**P1**
	Sensor with regulator	**P2**

Flushing

14	Without flushing (no code)	
	With flushing (see table on page 3)	**F1-F7**

Special order

15	Special feature	**SOXXX**

Other

16	Mark in text here	*

1) This data sheet also applies to series 32.

Technical data

Frame size			MCR3	MCR5	MCR10					
Type of mounting			Front case flange mounting							
Pipe connections[1)2)]			Threaded per SAE J514; Flanged per SAE J518							
Shaft loading			see page 9							
Weight										
Single speed (1L)	m	kg	28	53	65					
Two speed (2WL)	m	kg	30	58	–					
Hydraulic fluid[3)]										
Fluid cleaniness			ISO 4406, Class 20/18/15							
Fluid viscosity range	$\nu_{min/max}$	mm²/s	10 to 2000							
Fluid temperature range[4)]	$\theta_{min/max}$	°C	-20 to +85							
Pressure			Low displacement				High displacement			
Operating pressure	p_{nom}	bar	250				250			
Maximum differential pressure[5)6)]	Δp_{max}	bar	450				400			
Maximum pressure at ports **A** or **B**[5)6)]	p_{max}	bar	470				420			
Maximum case drain pressure	$p_{case\ max}$	bar	10				10			
Motor performance MCR3										
Displacement	V_g	cm³/rev	160	225	255	280	325	365	400	
Specific torque		Nm/bar	3	4	4	4	5	6	6	
Maximum torque[5)]	T_{max}	Nm	1146	1611	1826	2005	2069	2324	2546	
Minimum speed for smooth running[7)]	n_{min}	rpm	0.5	0.5	0.5	0.5	0.5	0.5	0.5	
Maximum speed (1L)[8)9)]	n_{max}	rpm	670	475	420	385	330	295	270	
Maximum speed (2WL)[8)9)]	n_{max}	rpm	875	620	550	500	430	385	350	
Motor performance MCR5										
Displacement	V_g	cm³/rev	380	470	520	565	620	680	750	820
Specific torque		Nm/bar	6	7	8	9	10	11	12	13
Maximum torque[5)]	T_{max}	Nm	2722	3366	3724	4047	3947	4329	4775	5220
Minimum speed for smooth running[7)]	n_{min}	rpm	0.5	0.5	0.5	0.5	0.5	0.5	0.5	0.5
Maximum speed (1L)[8)9)]	n_{max}	rpm	475	385	350	320	290	265	240	220
Maximum speed (2WL)[8)9)]	n_{max}	rpm	570	465	420	385	350	320	290	265
Motor performance MCR10										
Displacement	V_g	cm³/rev	780	860	940		1120	1250	1340	
Specific torque		Nm/bar	12	14	15		18	20	21	
Maximum torque[5)]	T_{max}	Nm	5586	6159	6732		7130	7958	8531	
Minimum speed for smooth running[7)]	n_{min}	rpm	0.5	0.5	0.5		0.5	0.5	0.5	
Maximum speed (1L and 2WL)[8)9)]	n_{max}	rpm	215	195	178		150	134	125	

Footer on page 9

			MCR3		MCR5		MCR10		
Holding brake (disc brake)			B2		B2	B4	B5	B7	
Minimum holding torque	$t_{min/max}$	Nm	2200		2200	4400	4400	7000	
Release pressure (min)	$p_{rel\ min}$	bar	11		11	11	11	11	
Release pressure (max)	$p_{rel\ max}$	bar	15		15	15	15	15	
Maximum pressure at brake port „Z“	p_{max}	bar	40		40	40	40	40	
Oil volume to operate brake	V_{rel}	cm^3	23		23	46	17	36	
			MCR3		**MCR5**		**MCR10**		
Dynamic brake			**C4L/R**		**C7L/R**		**C12L/R**		
Braking torque	$t_{min/max}$	Nm	3000	4000	4700	6400	9000	12000	
Brake cable tension		N	1270	1661	1755	2400	2580	3460	
Brake port pressure	p_{max}	bar	73	97	89	120	84	112	
Brake cylinder operating volume	V	cm^3	9	9	13	13	24.91	24.91	
			MCR3						
Dynamic disc brake			**S4**						

Footer from page 8

1) Ensure motor case is filled with oil prior to start-up. See instruction manual 15215-B.
2) For installation and maintenance details, please see instruction manual 15215-B.
3) For use with environmentally acceptable fluids HEES, HEPG, HETG, fluoroelastomer / Viton seals must be specified.
4) Extension of the allowable temperature range may be possible depending on specification. Please consult Bosch Rexroth Engineering Department in Glenrothes for further details.
5) Maximum values should only be applied for a small portion of the duty cycle. Please consult Bosch Rexroth Engineering. Department in Glenrothes for motor life calculations based on particular operating cases.
6) When operating motors in series, please consult Bosch Rexroth Engineering Department in Glenrothes.
7) For continuous operation at speeds <5 rpm please consult Bosch Rexroth Engineering Department in Glenrothes.
8) Based on nominal no-load Δp of 20 bar in full-displacement mode.
9) Warning! During the running in period of the motor (min. 20 hrs) it should not be run unloaded at >100 rpm.

Note

- Motor performance values are based on theoretical calculations.
- Efficiencies are not taken into consideration for theoretical calculations.
- Brake torque accounts for tolerances. Values are based when used with standard mineral oil (HLP).

Please refer the related foot notes for more details.

RE 15200/09.2012, Bosch Rexroth AG

Efficiencies

▼ **Mechanical efficiency**

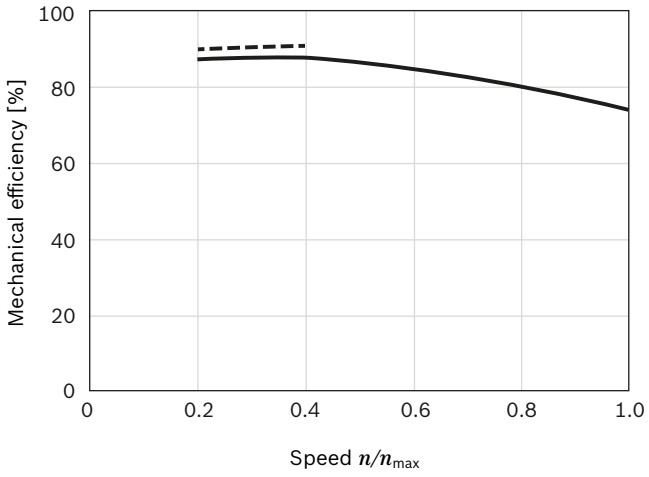

▼ **Charge pressure**

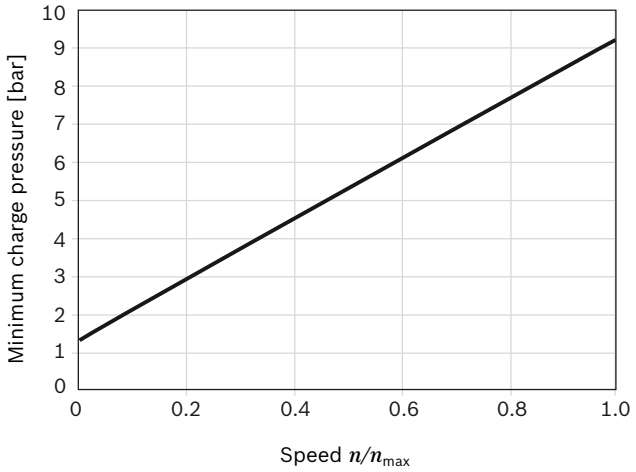

▼ **Volumetric efficiency**

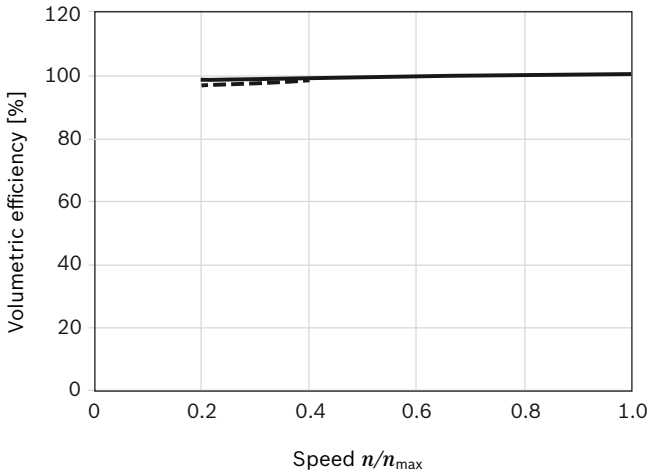

100 bar / 1450 psi
300 bar / 4350 psi

Note:

For specific performance information or operating conditions contact the Engineering Department at Bosch Rexroth, Glenrothes.

Permitted loading on drive shaft

Drive shaft ...3W F180...

Maximum radial load $F_{R\,max}$ (with axial load F_{ax} = 0)

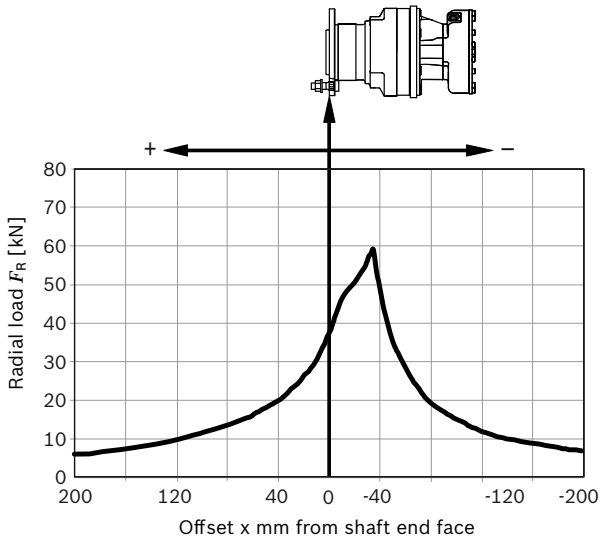

Maximum axial load $F_{ax\,max}$ (with radial load F_R = 0):

$F_{ax\,max}$ = 43400 N ← +

$F_{ax\,max}$ = 36800 N → –

Drive shaft ...10W F280...

Maximum radial load $F_{R\,max}$ (with axial load F_{ax} = 0)

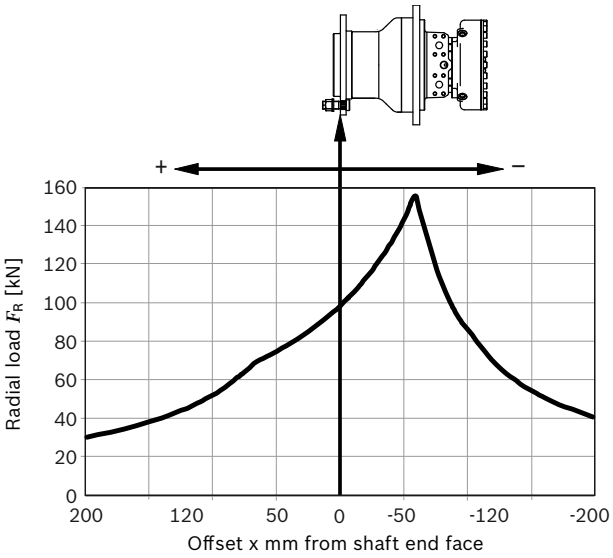

Maximum axial load $F_{ax\,max}$ (with radial load F_R = 0):

$F_{ax\,max}$ = 108100 N ← +

$F_{ax\,max}$ = 88700 N → –

Drive shaft ...5W F250...

Maximum radial load $F_{R\,max}$ (with axial load F_{ax} = 0)

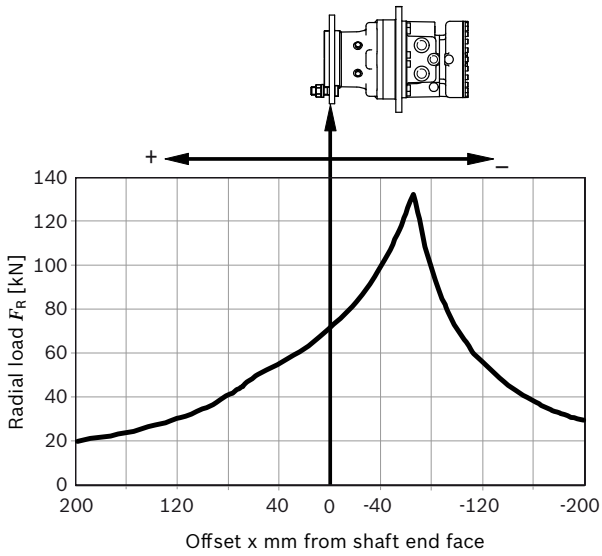

Maximum axial load $F_{ax\,max}$ (with radial load F_R = 0):

$F_{ax\,max}$ = 85000 N ← +

$F_{ax\,max}$ = 67400 N → –

Note:

- These values and graphs are for initial guidance only
- For actual motor life calculations under typical or specified duty cycles, contact Bosch Rexroth Engineering Department in Glenrothes

RE 15200/09.2012, Bosch Rexroth AG

Dimensions

MCR-W single speed (1L)

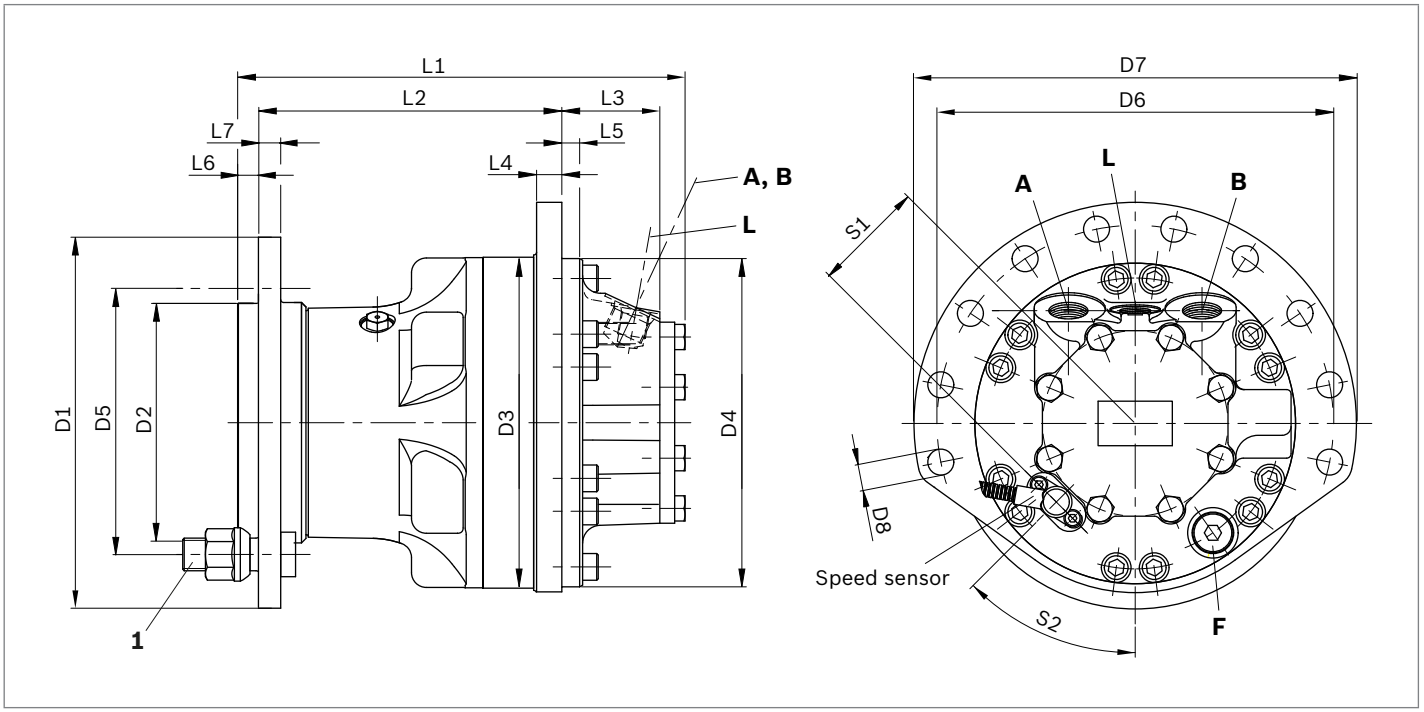

Motor	D1	D2	D3	D4	D5[1]	D6	D7	D8[2]	1
MCR3	ø180	ø92.7	ø180	ø180	ø140	ø210	ø237	ø14	5×M14×1.5
MCR5	ø250	ø160	ø223	ø222	ø205	ø267	ø297	ø17.4	8×M20×1.5
MCR10	ø280	ø175.8	ø264	ø253	ø225	ø300	ø335	ø17.5	10×M22×1.5

Motor	L1	L2	L3	L4	L5	L6	L7	S1	S2
MCR3	251.8	181	64	13	6	7	11.5	63.5	90°
MCR5	301.1	204	66	17	12	13.5	15	75	45°
MCR10	430.3	222	188.3	19	12.5	18	16	89	315°

Ports

Motor	Designation	Port function	Code	Size	p_{max} [bar]	State[4]
MCR3	**A, B**	Inlet, outlet	SAE J514	7/8-14 UNF	470/420[3]	O
	L	Case drain	SAE J514	9/16-18 UNF	10	O
	F	Filler port	SAE J514	3/4-16 UNF	10	X
MCR5	**A, B**	Inlet, outlet	SAE J514	1 1/16-12 UNF	470/420[3]	O
	L	Case drain	SAE J514	3/4-16 UNF	10	O
	F	Filler port	SAE J514	3/4-16 UNF	10	X
MCR10	**A, B**	Inlet, outlet	SAE J518[5]	3/4 in	470/420[3]	O
	L	Case drain	SAE J514	3/4-16 UNF	10	O
	F	Filler port	SAE J514	3/4-16 UNF	10	X

1) Wheel stud pitch circle diameter
2) Flange shape may be different for different frame sizes
3) Depends on nominal size
4) O = Must be connected (plugged on delivery)
   X = Plugged (in normal operation)
5) Only dimensions according to SAE J518
   (Code 62 - high pressure series)

Before finalizing your design, request a binding installation drawing.

MCR-W two speed (2WL)

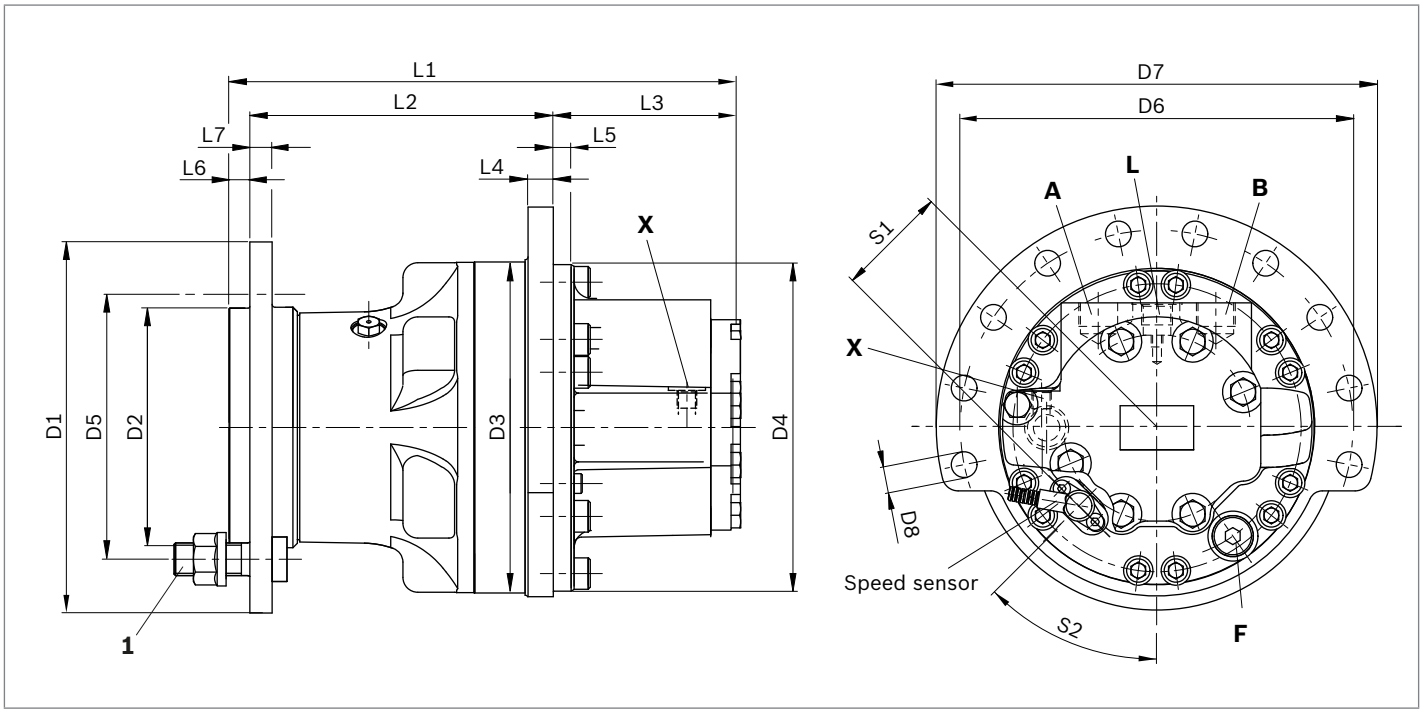

Motor	D1	D2	D3	D4	D5[1]	D6	D7	D8[2]	1
MCR3	ø182	ø95.7	ø180	ø180	ø160	ø210	ø237	ø14	5×M14
MCR5	ø250	ø160.8	ø223	ø222	ø205	ø267	ø298	ø17.4	8×M20×1.5

Motor	L1	L2	L3	L4	L5	L6	L7	S1	S2
MCR3	311.5	181	123.5	13	6	7	11.5	63.5	300°
MCR5	344.1	204	126	17	12	13.5	15	75	45°

Ports

Motor	Designation	Port function	Code	Size	p_{max} [bar]	State[4]
MCR3	A, B	Inlet, outlet	SAE J514	7/8-14 UNF	470/420[3]	O
	L	Case drain	SAE J514	9/16-18 UNF	10	O
	F	Filler port	SAE J514	3/4-16 UNF	10	X
	X	2 speed port	SAE J514	9/16-18 UNF	35	O
MCR5	A, B	Inlet, outlet	SAE J514	1 1/16-12 UNF	470/420[3]	O
	L	Case drain	SAE J514	3/4-16 UNF	10	O
	F	Filler port	SAE J514	3/4-16 UNF	10	X
	X	2 speed port	SAE J514	9/16-18 UNF	35	O

1) Wheel stud pitch circle diameter
2) Flange shape may be different for different frame sizes
3) Depends on nominal size
4) O = Must be connected (plugged on delivery)
X = Plugged (in normal operation)

Before finalizing your design, request a binding installation drawing.

6

Holding brake (multi-disc brake)

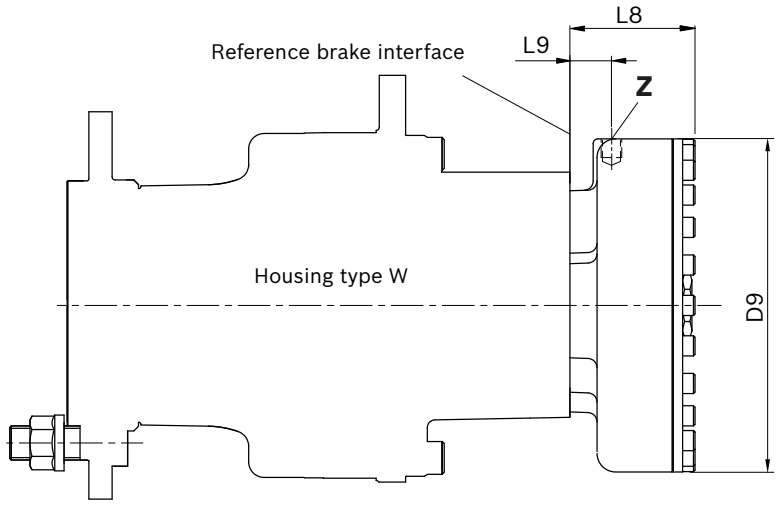

Motor	Brake	L8	L9	D9
MCR3	**B2**	67.3	22	ø172
MCR5	**B2**	67.3	22	ø172
	B4	80.7	26.5	ø215
MCR10	**B5**	84.7	26.5	ø215
	B7	98	29	ø251

Motor	Designation	Port function	Code	Size	p_{max} [bar]	State
MCR3	**Z**	Brake port	SAE J515	9/16-18 SAE	30	O
MCR5	**Z**	Brake port	SAE J515	9/16-18 SAE	30	O
MCR10	**Z**	Brake port	SAE J515	9/16-18 SAE	30	O

1) O = Must be connected (plugged on delivery)

Before finalizing your design, request a binding installation drawing.

Dynamic brake (drum brake)

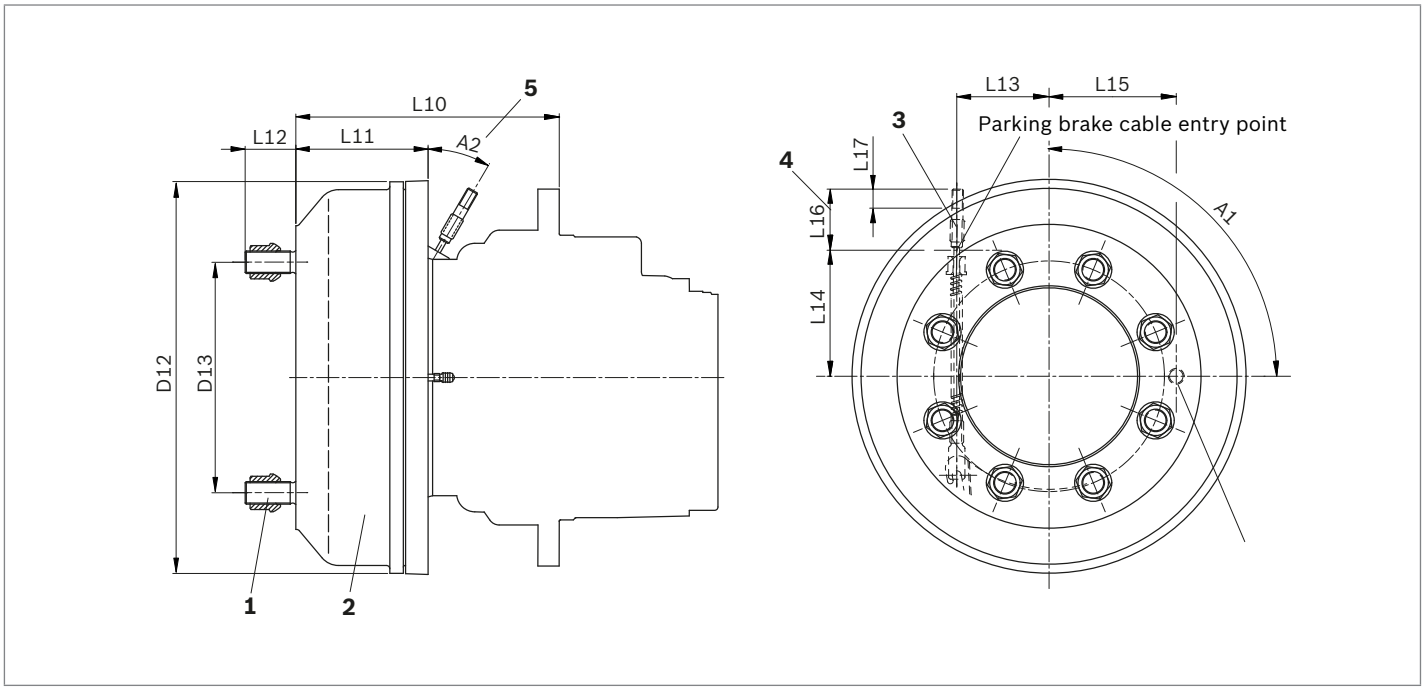

Motor	Brake	L10	L11	L12	L13	L14	L15	L16	L17	D12	D13	A1	A2
MCR3	**C4**	192	95	32.5	65	86	89	83	19	ø272	ø160	30°	30°
MCR5	**C7**	234.1	117.5	45	82	–	113	54	17	ø348	ø205	90°	30°
MCR10	**C12**	294.6	132	36	80	–	120	40	17	ø365	ø225	90°	30°

1	**C4**	10 Studs M18x1.5 with spherical wheel nuts
	C7	8 Studs M20x1.5 with spherical wheel nuts
	C12	10 Studs M22x1.5 with spherical wheel nuts
2	Dynamic drum brake for use with brake fluid DOT 3+5 or SAE JI 703. If brake is to be used with mineral oil a special order is to be made. Please state if seals for mineral oil are required when placing order.	
3	Brake cable (Bowden cable) can be connected from right side for C*R and left side for C*L (left is a mirror image of the right type) (* = 2, 4, 7, 12). Mechanical brake cable is not supplied with the motor.	
4	Brake cable length.	
5	Angular position of brake cable.	

Before finalizing your design, request a binding installation drawing.

Dynamic drum brake run-in procedure

- Brake the machine hard in forward and reverse directions until the brake drum temperature reaches 200 °C.
- Allow the brake to cool.
- To remove residue, brake gently 2 times each in the forward and reverse directions.

Note:

The drum brake cylinder port must be oriented as instructed in the installation drawing. The drum brake also has an influence on permitted radial loading due to its offset.

Left side of vehicle
Ordering code C4L

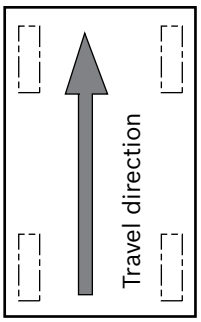

Right side of vehicle
Ordering code C4R

6

RL 15200/09 2016 Bosch Rexroth AG

837

Dynamic brake (Disc brake)

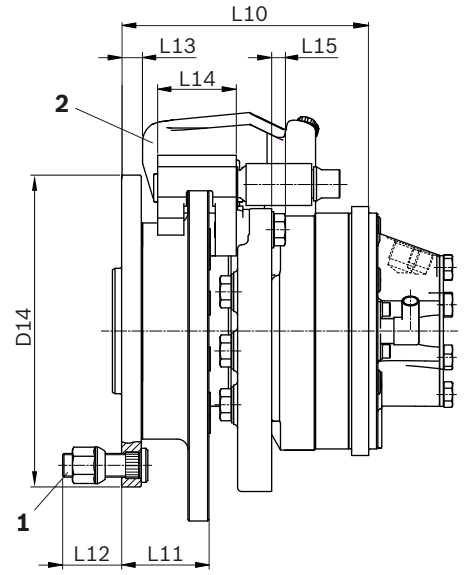

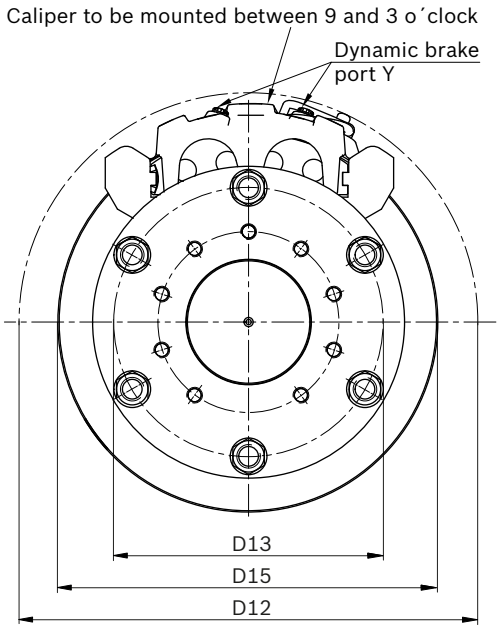

Motor	Brake	L10	L11	L12	L13	L14	L15	D12	D13	D14	D15
MCR3	**S4**	188.6	66.6	45	16	60	10.5	ø350	ø205	ø238	ø290

1	**S4**	6 Studs M18x1.5 with spherical wheel nuts
2	Caliper disc brake for use with fluid DOT 3 or DOT 4 SAE JI 703 If brake is to used with mineral oil a special order is to be made. Please stete if seals for mineral oil are required when placing order	

Before finalizing your design, request a binding installation drawing.

Dynamic disc brake run-in procedure

- Perform a few braking stops to create enough heat to release in the lining

Left side of vehicle
Ordering code S4L

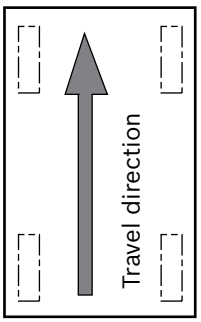

Right side of vehicle
Ordering code S4R

RL 15200/09 2010, **Bosch Rexroth AG**

839

Selection guide

Data sheet	Motor type Application		Frame size 3 160..400 cc	5 380..820 cc	6 820..920 cc	10 780..1340 cc	15 1130..2150 cc	20 1750..3000 cc
15198	**MCR-F** Wheel drives		●	●	–	●	●	–
15200	**MCR-W** Heavy duty wheel drives		●	●	–	●	–	–
15195	**MCR-A** Frame integrated drives		●	●	–	●	●	–
15199	**MCR-H** Integrated drives		●	●	–	●	●	●
15221	**MCR-T** Track drives		–	●	●	●	–	–
15223	**MCR-R Series 41** Hydraulic drive assist		–	–	–	●	–	–
15214	**MCR-X** Slew drives		●	●	–	–	–	–
15197	**MCR-C** Compact drives		–	–	–	–	–	●
15196	**MCR-D** Industrial applications		●	●	–	●	–	–
	MCR-E Industrial applications		–	●	–	–	–	–

Radial piston motor for slew drives
MCR-X

- Frame size MCR3, MCR5
- Displacement 160cc to 820cc
- Maximum pressure 350 bar
- Torque output up to 4000 Nm
- Open circuits

Features

- Low-speed radial-piston design
- Short installation length
- Industry-standard mounting
- Integrated pinion
- High volumetric and mechanical efficiency
- Smooth operation at very low speed
- Low noise and backlash
- Anti-shock cross-port relief valves
- Anti-cavitation valves
- Holding brake
- Optional brake release valve with delay function

Contents

Application	2
Functional description	2
Ordering code	4
Technical data	6
Dimensions	8
Selection guide	10

6

RE 15214/01.2011, Bosch Rexroth AG

Application

The MCR-X motors are intended for open-circuit operation as drive motors for the slewing function primarily of excavators in the 2 to 8 ton weight range (MCR3X for 2 to 4 ton and MCR5X for 4 to 8 ton). Other possible areas of application include slewing for forestry machines and aerial work platforms.

Functional description

The MCR-X is a low-speed high-torque motor of radial-piston design. For a description of the operating principle see Bosch Rexroth data sheet 15195.

Anti-shock relief valves
Pressure relief valves venting to return line are fitted to facilitate use in open circuits. These valves have an anti-shock function to limit the rate of rise of pressure and prevent overly rapid changes in acceleration, thus limiting the shock felt by the machine operator and extending gear life. Different valve varients are used depending on the pressure.

Anti-cavitation valves
During deceleration it is necessary to maintain sufficient pressure at the motor inlet to hold the pistons against the cam ring and prevent cavitation. For this reason the motor is equipped with a make-up port M, which feeds anti-cavitation check valves connected to ports A and B (see schematic diagram on page 5). See Technical Data on page 6 for details of the pressure that is required at port M.

Holding brake
A holding brake is usually required to comply with relevant equipment standards such as EN474 and is, therefore, fitted as standard to the MCR-X motor.
A disc pack (3), with alternate discs splined to the brake shaft and brake housing (4), is compressed by the force of a disc spring (5) acting through a piston (6). The friction between the discs generates a holding torque.
When fluid is fed into the annular area (7), the pressure on the underside of the piston rises, opposing the spring force. If sufficient pressure is applied (see Technical data on page 6), the piston moves to the right, removing the compression on the disc pack and allowing the motor to turn freely.
When the pressure is removed the spring forces the piston back to the left and once again compresses the disc pack. Thus, the brake is fail-safe.
In case of hydraulic system failure, it may be manually released by loosening the end cover screws (8).

Section of holding brake

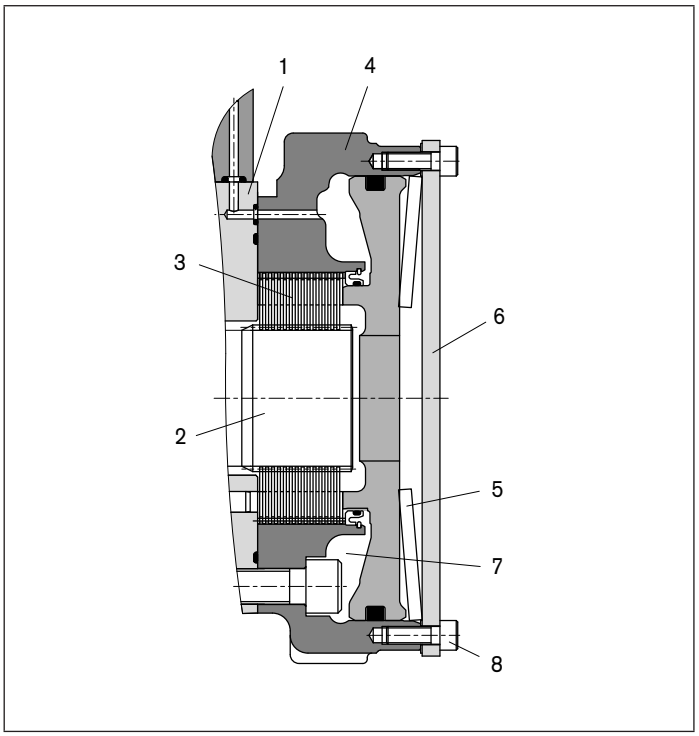

Brake valve option

The holding brake is designed to be engaged only once the motor has stopped rotating. Premature engagement can lead to noise, overheating and wear or seizure of the brake discs. Thus, there is a need to delay brake engagement after the control joystick pilot pressure falls to zero, for sufficient time to allow the machine upperstructure to come to rest in the worst case of maximum speed and maximum moment of inertia. For this reason, a brake control valve with a delay function is offered as an option on the MCR-X.

▼ **MCR-X with brake valve**

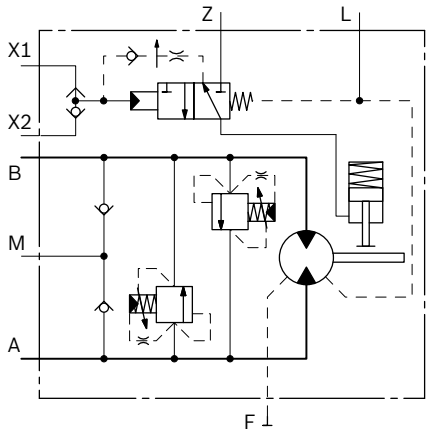

The valve functions as follows:

- The brake release pressure is fed to port Z.
- Pilot pressure from the joystick (one line for each direction) is fed to ports X1 and X2 and an internal shuttle valve feeds the higher of these to the brake control valve.
- If the pilot pressure is sufficient, the valve shifts and the brake is immediately released.
- When the joystick is returned to the centre position, pilot pressure falls, the valve shifts back and flow is drained from the brake at a metered rate determined by the diameter of an orifice within the valve. This metering of the flow out of the brake results in a delay in engagement.

Where the brake valve option is not supplied, the above functions must be implemented externally to the motor.

▼ **MCR-X without brake valve**

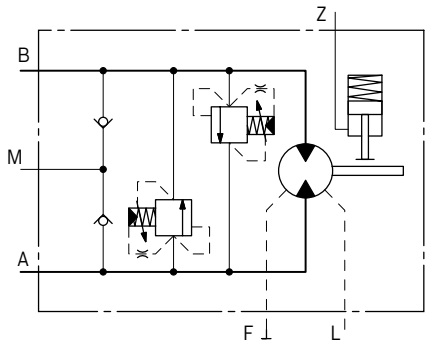

Speed sensor options

A hall-effect speed sensor may be fitted as an option, giving a two-channel output of phase-displaced square waves, and enabling detection of speed and direction. A toothed target disc is fitted to the motor cylinder block, and the sensor, fitted to a port in the rear case, produces a pulse on each channel as each tooth passes in front of it. The frequency of the pulses is proportional to the rotational speed. Versions are available for use with regulated supplies (Code P1) and for direct connection to a 12 V or 24 V unregulated supply (Code P2).

The MCR-X may also be supplied fitted with a target disc and with a speed sensor port machined, but covered and sealed with a blanking plate (Code P0). These “sensor-ready” motors may be fitted with a sensor at a later date.

Terminal connections

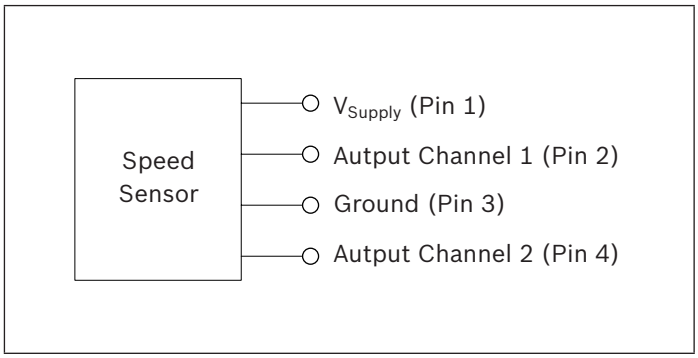

Connector _____ Deutsch DT04-4P-E008
Cable length _____ 600 mm

For technical data see standard DO/100/117 (please consult Rexroth Engineering Department in Glenrothes).

Direction of shaft rotation with flow

(view from drive shaft)

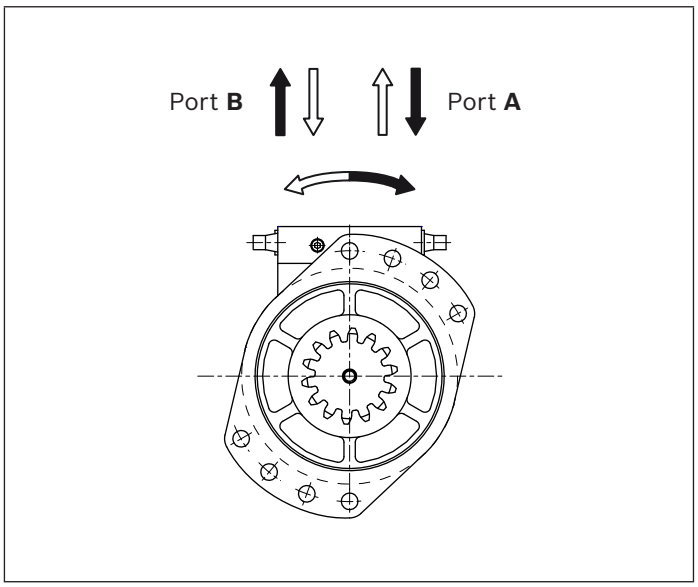

Ordering code

01	02	03	04	05	06		07	08	09	10	11	12	13	14	15	16
MCR		**X**			**Z**	**/**	**3X**									

Radial piston motor

01	Radial-piston type, low-speed, high-torque motor, equipped with cross-port relief and anti-cavitation valves	**MCR**

Frame size

02	Frame size	3	**3**
		5	**5**

Motor type

03	Slew motor	**X**

Nominal size, displacement V_g in cm^3/rev

04	Frame size 3			**160**	**225**	**255**	**280**	**325**	**365**	**400**
	Low displacement: motors use standard cylindrical pistons	LD		●	●	●	–	–	–	–
	High displacement motors use stepped pistons	HD		–	–	–	●	●	●	●
	Frame size 5		**380**	**470**	**520**	**565**	**620**	**680**	**750**	**820**
	Low displacement: motors use standard cylindrical pistons	LD	●	●	●	●	–	–	–	–
	High displacement motors use stepped pistons	HD	–	–	–	–	●	●	●	●

Drive shaft

05	Pinion specification: module 6, 14 teeth	**G101**
	Pinion specification: module 6.5, 17 teeth	**G126**
	Pinion specification: module 5, 13 teeth (only MCR3X)	**G79**
	Other[1)]	**GXXX**

Through shaft

06	Without through shaft	**Z**

Series

07	Series 30 to 39[2)]	**3X**

Brake

08	Hydraulic release multi-disc holding brake	**B2**
	Hydraulic release multi-disc holding brake (only MCR5X)	**B4**

Seals

09	NBR (nitrile rubber)	**M**
	FKM (fluoroelastomer / Viton)	**V**

Direction of rotation

10	Viewed from drive shaft: clockwise with flow into port A	**1L**

Ports

11	Tapped with UNF thread (SAE J514)	**12**
	Tapped to JIS B 2351	**64**

Speed sensor

13	Without sensor (no code)	
	Sensor ready	**P0**
	Sensor without regulator	**P1**
	Sensor with regulator	**P2**

01	02	03	04	05	06		07	08	09	10	11	12	13	14	15	16
MCR		**X**			**Z**	**/**	**3X**									

Valves

13	With brake valve orifice ø0.6 mm	**V01**
	Without brake valve	**V02**
	Other[3)]	**VXX**

Relief setting

14	220 bar	**A**
	Other	**B to Z**

Special order

15	Two-coat black paint	**SO400**
	Other	**SOXXX**

Other

16	Mark in text here	*

1) Other pinions may be provided to the customer's specification, depending on sales volume
2) Series 30 to 39 are dimensionally interchangeable
3) The brake delay orifice must be sized to suit the machine. ø0.6 mm is the standard size but other diameters may be supplied depending on the particular case.

● = Available – = Not available

6

RE 15214/01.2011 | Bosch Rexroth AG

845

Technical data

Frame size			MCR3X and MCR5X							
Type of mounting			Flange mounting via front case							
Mounting screws			6 - 8 x M16, Grade 12.9							
Minimum mounting screw torque		Nm	300							
Port type			Tapped to SAE J514 or JIS B 2351							
Shaft type			With integrated pinion (see page 9)							
Piston seat material			P23 (high efficiency)							
Weight										
MCR3X		kg	39							
MCR5X		kg	58							
Hydraulic fluid[1)2)]			Mineral oils (HL, HLP) to DIN 51 524							
Fluid cleanliness			ISO 4406, Class 20/18/15							
Fluid viscosity range[3)]	$n_{min/max}$	mm^2/s	10 to 2000							
Fluid temperature range	$t_{min/max}$	°C	-20 to +105							
Maximum flow into port A or B	$q_{V\,max}$	L/min	70							
Maximum pressure at ports A, B and M[4)]	p_{max}	bar	350							
Maximum pressure at port L	$p_{case\,max}$	bar	10							
Maximum pressure at ports X1 and X2	$p_{X\,max}$	bar	70							
Maximum pressure at port Z	$p_{Z\,max}$	bar	40							
Minimum pressure at port M[5)6)]	$p_{M\,min}$	bar	4							
Relief valves										
Pressure setting range[8)]		bar	100 to 300							
Anti-cavitation valves										
Cracking pressure		bar	0.25							
Brake delay valve										
Shift pressure	$p_{X\,shift}$	bar	3.7							
Orifice diameter[9)]		mm	0.6							
Delay time[9)]		s	2.9 to 5.8							
Speed sensor										
For technical data see standard DO/100/117 (please consult Rexroth Engineering Department in Glenrothes).										
Motor Performance MCR3X[7)]										
Displacement	V_g	cm^3/rev	160	225	255	280	325	365	400	
Maximum speed, Single speed motor (1L)	n_{max}	rpm	375	265	235	215	185	165	150	
Maximum torque[4)]	T_{max}	Nm	710	1000	1130	1240	1440	1620	1780	
Minimum speed for smooth running	n_{min}	rpm	0.5	0.5	0.5	0.5	0.5	0.5	0.5	
Motor Performance MCR5X[7)]										
Displacement	V_g	cm^3/rev	380	470	520	565	620	680	750	820
Maximum speed, Single speed motor (1L)	n_{max}	rpm	155	125	115	105	95	85	80	75
Maximum torque[4)]	T_{max}	Nm	1685	2090	2310	2510	2750	3020	3330	3640
Minimum speed for smooth running	n_{min}	rpm	0.5	0.5	0.5	0.5	0.5	0.5	0.5	0.5
Brake[10)]			**MCR3X**		**MCR5X**		**MCR5X**			
Holding brake			B2		B2		B4			
Minimum brake torque	$T_{br\,min}$	Nm	1170		2100		4400			
Minimum pressure at which brake release begins	$p_{rel\,min}$	bar	8		8		11			
Maximum pressure required to fully release brake	$p_{rel\,max}$	bar	11		11		15			

Note

- Motor performance values are based on theoretical calculations.
- Efficiencies are not taken into consideration for theoretical calculations.
- Brake torque accounts for tolerances. Values are based when used with standard mineral oil (HLP).

Please refer the related foot notes for more details.

1) The motor must be filled with oil prior to start-up. The filler port F is provided for this purpose.
2) For use with other fluids, please consult Rexroth Engineering Department in Glenrothes.
3) With high oil viscosity, there is an increased risk of cavitation, so p_M may need to be increased.
   The machine should be tested at the minimum operating temperature to ensure satisfactory operation.
4) An increase in the maximum pressure to 350 bar, and corresponding torque increase, may be possible by special order.
   Please consult Rexroth Engineering Department in Glenrothes for further details.
5) For operation below the quoted make-up pressure, please contact Rexroth Engineering Department in Glenrothes.
6) The quoted make-up pressure applies at the port M. Please take pressure drop in the make-up line into account.
   Rexroth recommends a minimum make-up line diameter of 5/8 in, but this must be confirmed by machine testing.
7) The quoted values are for initial reference only. Please contact Rexroth Engineering Department in Glenrothes for a full technical evaluation prior to ordering.
8) The setting range quoted applies with standard springs. Extension of the range may be possible by special order.
9) The standard orifice diameter is quoted, along with the delay time for ISO VG46 oil at 50 °C. However, the orifice diameter must be selected to ensure that the brake does not apply before the motor has stopped rotating. Please contact Rexroth Engineering Department in Glenrothes for further information.
10) The holding brake must be applied only in the static condition. Application of the brake while the motor is turning may result in damage to the unit and reduction in holding torque. The machine designer must ensure that an adequate brake delay exists to prevent this. The brake is, however, applied with a noise-reduction coating, to prevent brake squeal during short-duration drive-through caused by swing ram operation.

Dimensions

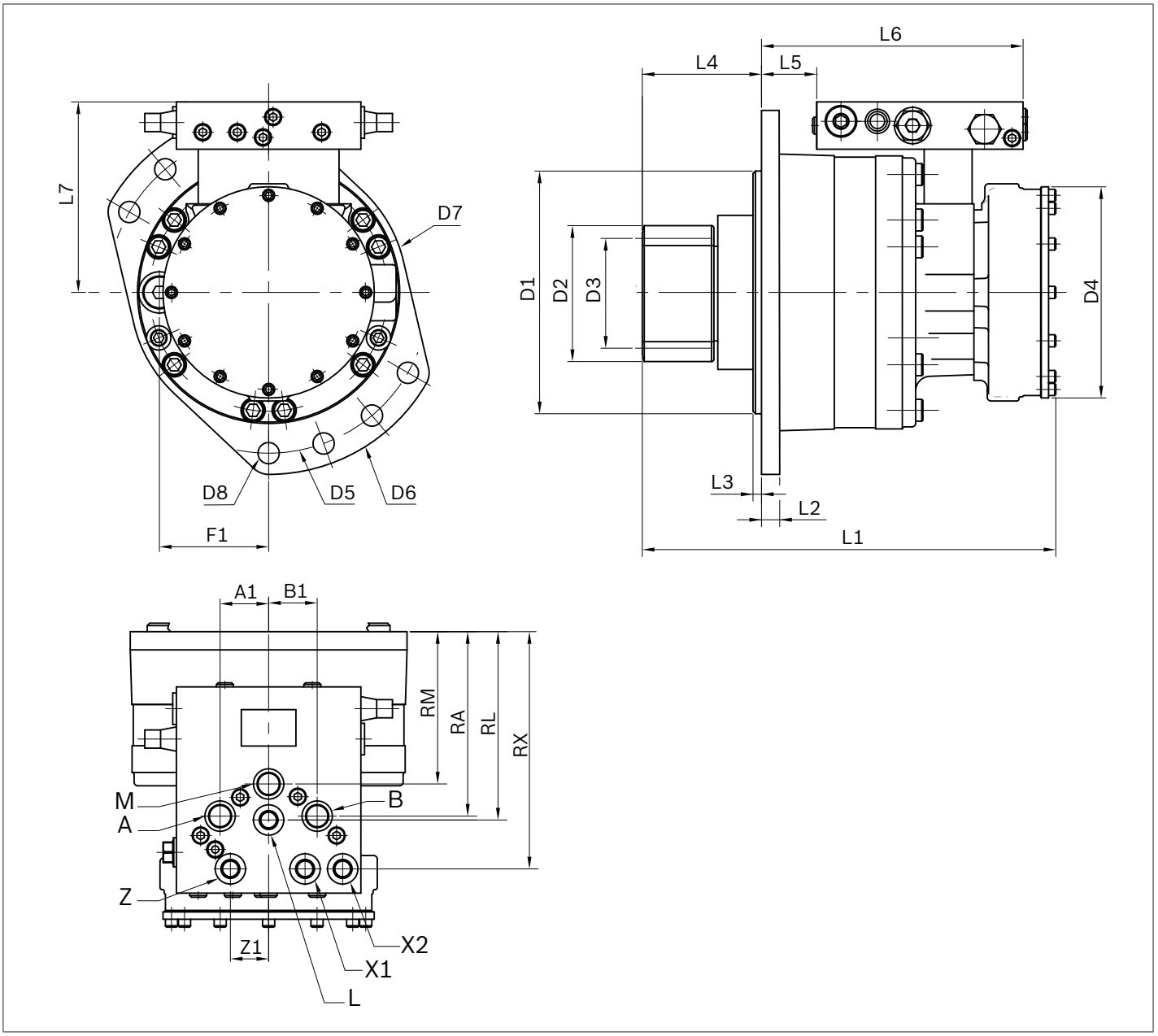

Motor	D1	D2	D3	D4	D5	D6	D7	D8	L1	L2	L3	L4	L5	L6	L7
MCR3X	ø175	ø79	ø69	ø174	ø220	ø248	ø190	ø17	315	15	8	17	15	191	132
MCR5X	ø200	ø112	ø91	ø174	ø265	ø300	ø228	ø17.5	334.7	15	7	16	18	215.5	157

Motor	A1	B1	Z1	F1	RM	RA	RL	RX
MCR3X	29.5	29.5	13	72	94	132	123.4	171
MCR5X	40	40	31.5	90	125.5	152	155.2	195.5

The drawings are for initial guidance only.
Before finalizing your design, request a binding installation drawing.
Dimensions in mm.

Drive shaft

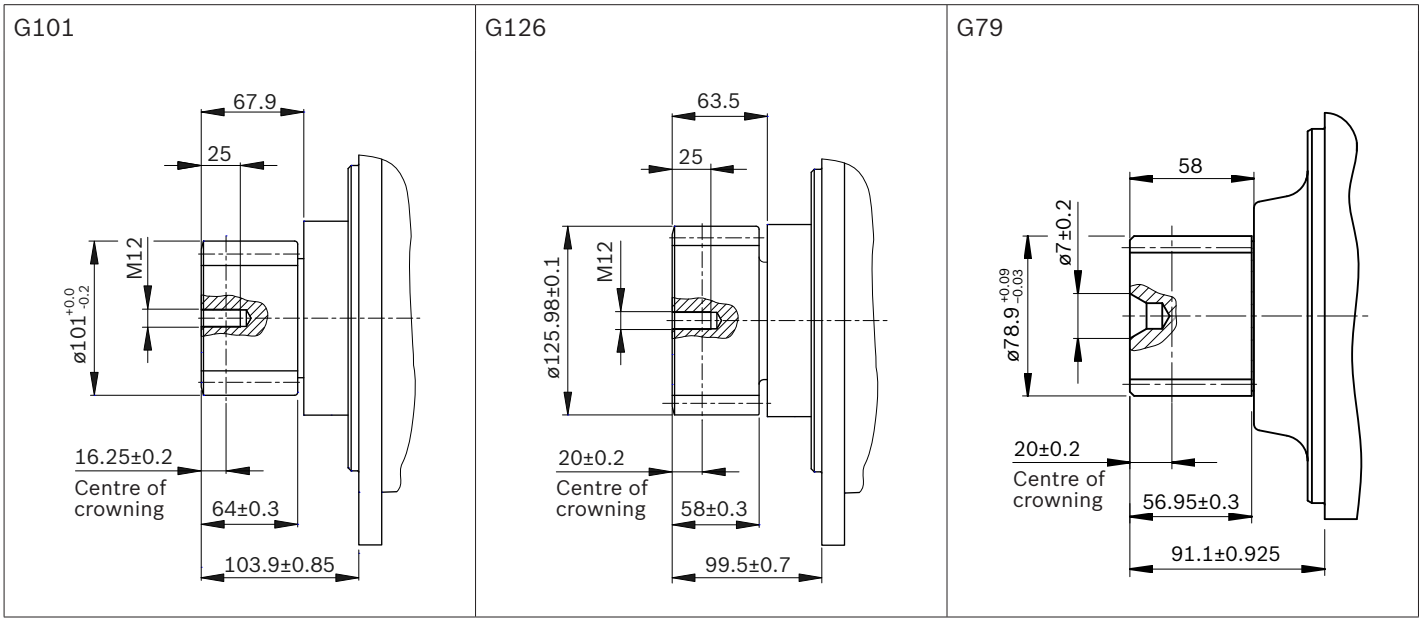

Pinion data		G101	G126	G79
Module	mm	6	6.5	5
No. of teeth		14	17	13
Pressure angle	°	20	20	20
Addendum mod. coefficient		0.5	0.4	0.4
Dimension over pins	mm	102.88±0.05	128.64±0.04	81.7±0.09
Pin diameter	mm	10.5	11	9.60
Crowning	mm	0.0115/0.1035	0.0762/0.1016	0.0762/0.102
Accuracy grade (ISO1328)		8	8	8

Ports

Designation	Port function	Ordering code 12	Size	Ordering code 64	Size	Maximum pressure [bar]	State[1)]
A, B	Inlet, outlet	SAE J514	3/4-16 UNF	JIS B 2351	G3/8 in	300	O
M	Anti-cavitation	SAE J514	3/4-16 UNF	JIS B 2351	G3/8 in	300	O
X1, X2	Brake pilot	SAE J514	9/16-18 UNF	JIS B 2351	G1/4 in	30	O
L	Case drain	SAE J514	9/16-18 UNF	JIS B 2351	G1/4 in	70	O
Z	Brake port	SAE J514	9/16-18 UNF	JIS B 2351	G1/4 in	40	O
F	Filler port	SAE J514	3/4-16 UNF	SAE J514	3/4 in - 16 UNF	10	X

1) O = Must be connected (plugged on delivery)
X = Plugged (in normal operation)

Selection guide

Data sheet	Motor type Application		Frame size 3 160..400 cc	5 380..820 cc	6 820..920 cc	10 780..1340 cc	15 1130..2150 cc	20 1750..3000 cc
15198	**MCR-F** Wheel drives		●	●	–	●	●	–
15200	**MCR-W** Heavy duty wheel drives		●	●	–	●	–	–
15195	**MCR-A** Frame integrated drives		●	●	–	●	–	–
15199	**MCR-H** Integrated drives		●	●	–	●	●	●
15221	**MCR-T** Track drives		–	●	●	●	–	–
15223	**MCR-R Series 40** Hydraulic drive assist		–	–	–	●	–	–
15214	**MCR-X** Slew drives		●	●	–	–	–	–
15197	**MCR-C** Compact drives		–	–	–	–	–	●
15196	**MCR-D** Industrial applications		●	●	–	●	–	–
	MCR-E Industrial applications		–	●	–	–	–	–

Radial piston motors for industrial applications
MCR-D
MCR-E

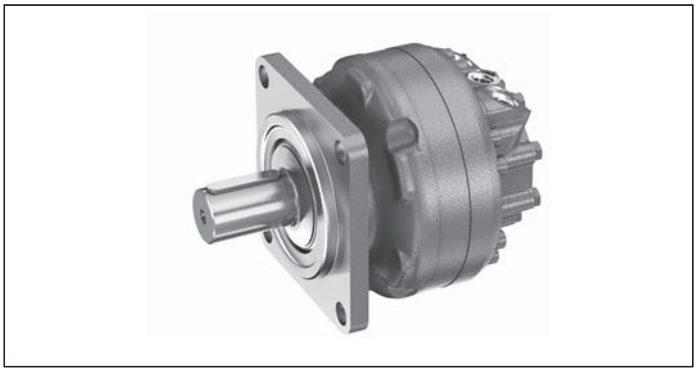

MCR-D
- Frame size MCR3, MCR5, MCR10
- Displacement 160 cc to 1340 cc
- Differential pressure up to 450 bar
- Torque output up to 8530 Nm
- Speed up to 875 rpm
- Open and closed circuits

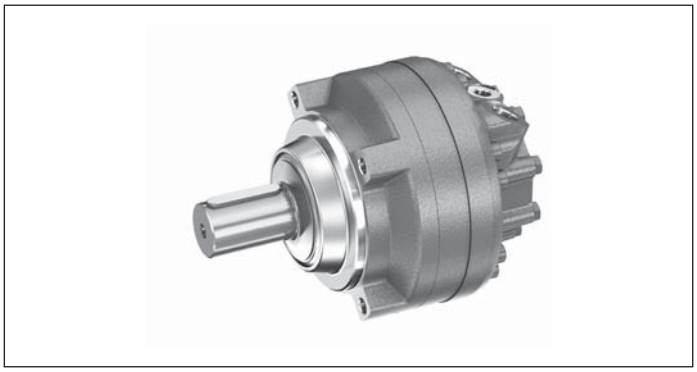

MCR-E
- Frame size MCR5
- Displacement 380 cc to 820 cc
- Differential pressure up to 450 bar
- Torque output up to 5220 Nm
- Speed up to 570 rpm
- Open and closed circuits

Features
- Compact robust construction
- High volumetric and mechanical efficiencies
- Front case mount
- Parallel shaft with key
- High reliability
- Low maintenance
- Smooth running at very low speeds
- Low noise
- Bi-directional
- Sealed tapered roller bearings
- Freewheeling possible
- Available with:
  - Holding brake (multi-disc)
  - Bi-directional two speed
  - Integrated flushing valve
  - Speed sensor

Contents

Functional description	2
Ordering code	5
Technical data	7
Efficiencies	8
Permitted loading on drive shaft	9
Dimensions	10
Selection guide	16

6

RE 15296/12.2012, Bosch Rexroth AG

Functional description

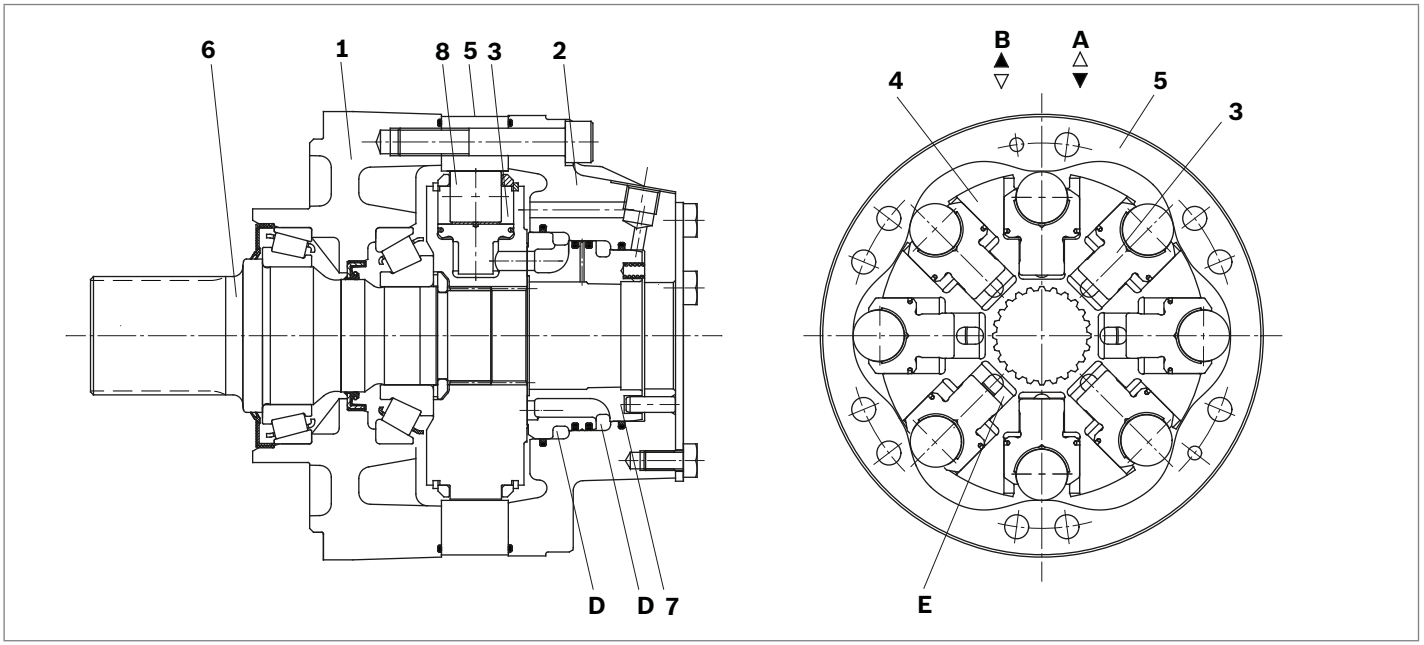

Hydraulic motors of the type MCR-D, MCR-E are radial piston motors with front case mounting and parallel shaft with key. MCR-D and MCR-E have the same type of rotary group and rear case assembly but differ in the front case mounting. These motors are intended for open or closed circuit operations as drive motors for various industrial applications.

Construction
Two part housing (**1**, **2**), rotary group (**3**, **4, 8**), cam (**5**), drive shaft (**6**) and flow distributor (**7**)

Transmission
The cylinder block (**4**) is connected to the shaft (**6**) by means of splines. The pistons (**3**) are arranged radially in the cylinder block (**4**) and make contact with the cam (**5**) via rollers (**8**).

Torque generation

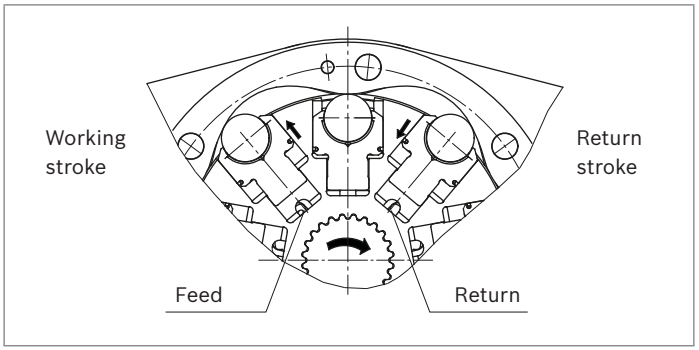

The number of working and return strokes corresponds to the number of lobes on the cam multiplied by number of pistons in the cylinder block.

Flow paths
The ports **A** and **B**, which are located in the rear case, carry oil through the distributor to the cylinder chambers (**E**).

Bearings
Tapered roller bearings capable of transmitting high axial and radial forces are fitted as standard.

Freewheeling
In certain applications there may be a requirement to free-wheel the motor. This may be achieved by connecting ports **A** and **B** to zero pressure and simultaneously applying a pressure of 2 bar to the housing through port **L**. In this condition, the pistons are forced into the cylinder block which forces the rollers to lose contact with the cam thus allowing free rotation of the shaft.

Two speed operation (2W)

In mobile applications where vehicles are required to operate at high speed with low motor loads, the motor can be switched to a low-torque and high-speed mode. This is achieved by operating an integrated valve which directs hydraulic fluid to only one half of the motor while continuously re-circulating the fluid in the other half. This “reduced displacement” mode reduces the flow required for a given speed and gives the potential for cost and efficiency improvements. The motor maximum speed remains unchanged.

Bosch Rexroth has developed a special spool valve to allow smooth switching to reduced displacement whilst on the move. This is known as “soft-shift” and is a standard feature of 2W motors. The spool valve requires either an additional sequence valve or electro-proportional control to operate in “soft-shift” mode.

▼ **Schematic**

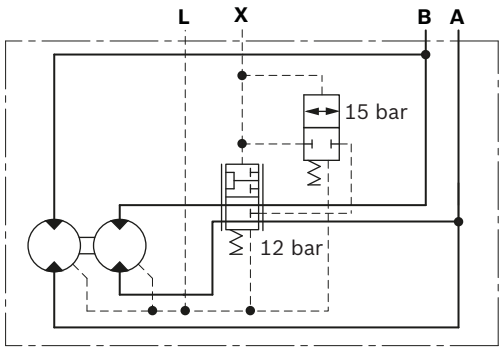

Flushing valve

In a closed circuit, the same hydraulic fluid continuously flows between the pump and the motor. This could therefore lead to overheating of the hydraulic fluid.

The function of the flushing valve option is to replace hydraulic fluid in the closed circuit with that from the reservoir. When the hydraulic motor is operated under load, either in the clockwise or anti-clockwise direction, the flushing valve opens and takes a fixed flow of fluid through an orifice from the low pressure side of the circuit. This flow is then fed to the motor housing and back to the reservoir normally via a cooler. In order to charge the low pressure side of the circuit, cool fluid is drawn from the reservoir by the boost pump and is fed to the pump inlet through the check valve. Thus the flushing valve ensures a continuous renewal and cooling of the hydraulic fluid. The flushing feature incorporates a relief valve which is used to maintain a minimum boost pressure and operates at a standard setting of 14 bar (other options available on request).

Different orifice sizes may be used to select varying flows of flushing fluid. The following table gives flushing rate values based on a boost / charge pressure of 25 bar.

▼ **Schematic**

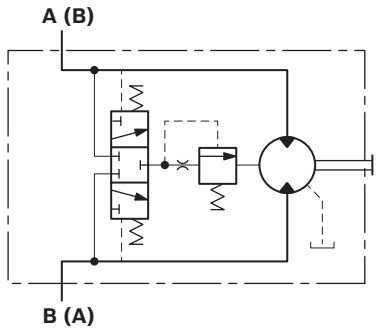

Flushing flow rates

Flushing code	Orifice size (mm)	Flow (l/min) at 25 bar[1)] min	max
F1	Ø1	2.2	2.7
F2	Ø1.5	5.0	6.1
F7	Ø1.7	6.4	7.8
F4	Ø2	8.2	10.7
F6	Ø2.3	8.8	11.4

1) 0.6 mm Shim (Standard), Cracking pressure = 11±3 bar

Holding brake (multi-disc brake)

Mounting
By way of rear housing (**2**) and brake shaft (**14**).

Brake application
As a safety requirement in mobile applications a parking brake may be provided to ensure that the motor cannot turn when the machine is not in use. The parking brake provides holding torque by means of discs (**11**) that are compressed by a disc spring (**10**). The brake is released when oil pressure is applied to brake port "**Z**" and the pressure in the annular area (**9**) compresses the disc spring using brake piston (**12**) thus allowing the brake discs (**11**) to turn independently.

Note
This brake is provided solely for static use - not to be used dynamically.

▼ **Schematic diagrams**

Motor without brake	Motor with holding brake
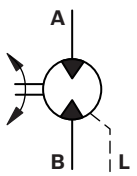	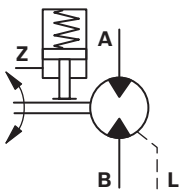

Manual release of holding brake
The brake may also be released manually by loosening screws (**13**).

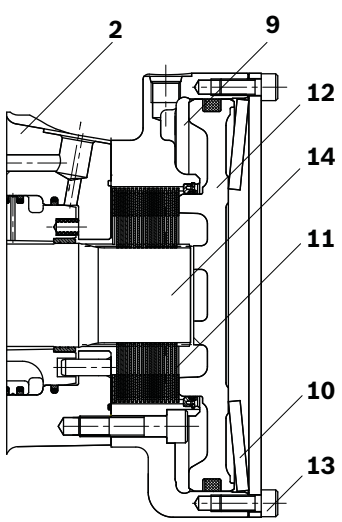

Speed sensor
A Hall-effect speed sensor (**16**) may be fitted as an option, giving a two-channel output of phase-displaced square waves, and enabling detection of speed and direction. A toothed target disc (**17**) is fitted to the motor cylinder block (**4**), and the sensor, fitted to a port in the rear case, produces a pulse on each channel as each tooth passes in front of it. The frequency of the pulses is proportional to the rotational speed.
Versions are available for use with regulated supplies 10 V (Code P1) and for direct connection to a 12 V or 24 V unregulated supply (Code P2).
The motor can also be supplied fitted with a target disc and with a speed sensor port machined, but covered and sealed with a blanking plate (Code P0). These "sensor-ready" motors may be fitted with a sensor at a later date.

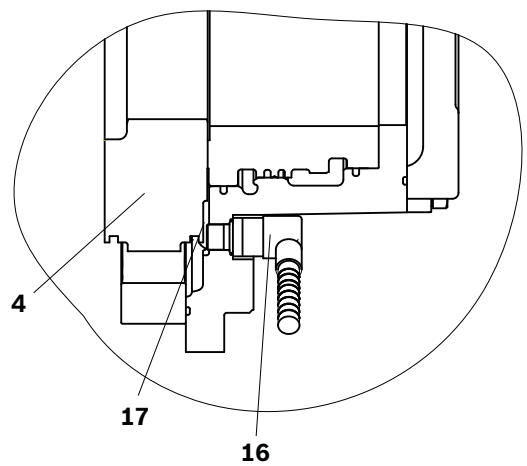

Direction of shaft rotation with flow
(viewed from drive shaft)

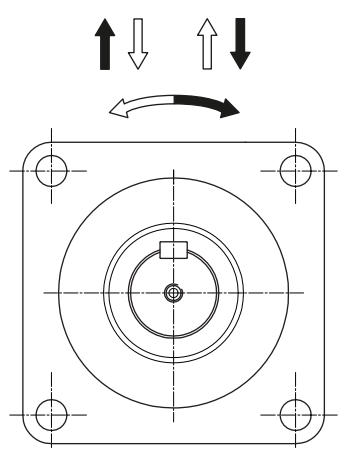

Ordering code ... 1L ... or ... 2WL ...

Ordering code

01	02	03	04	05	06		07	08	09	10	11	12	13	14	15	16
MCR					**Z**	**/**	**33**									

Radial piston motor

01	Radial-piston type, low-speed, high-torque motor	**MCR**

Frame size

			MCR-D	MCR-E	
02	Frame size	3	●	–	**3**
		5	●	●	**5**
		10	●	–	**10**

Housing type

03	Front case square mounting flange - SAE 4 off holes	**D**
	Front case mounting - 4 off M16 tapped holes	**E**

Nominal size, displacement V_g in cm³/rev

04	Frame size 3 (only for MCR-D)		**160**	**225**	**255**	**280**	**325**	**365**	**400**	
	Low displacement: motors use standard cylindrical pistons	LD	●	●	●	●	–	–	–	
	High displacement: motors use stepped pistons	HD	–	–	–	–	●	●	●	
	Frame size 5		**380**	**470**	**520**	**565**	**620**	**680**	**750**	**820**
	Low displacement: motors use standard cylindrical pistons	LD	●	●	●	●	–	–	–	–
	High displacement: motors use stepped pistons	HD	–	–	–	–	●	●	●	●
	Frame size 10 (only for MCR-D)		**780**	**860**	**940**	**1120**	**1250**	**1340**		
	Low displacement: motors use standard cylindrical pistons	LD	●	●	●	–	–	–		
	High displacement: motors use stepped pistons	HD	–	–	–	●	●	●		

Drive shaft

05	Parallel keyed shaft	ø40 mm only for MCR3D	**L40**
		ø50 mm available for MCR5D and MCR5E	**L50**
		ø60 mm only for MCR10D	**L60**

Through shaft

06	Without through shaft	**Z**

Series

07	Series 33	**33**

Brake

			MCR3	MCR5	MCR10	
08	Without brake		●	●	●	**A0**
	Hydraulic release spring applied multi-disc holding brake	2200 Nm	●	–	–	**B2**
		4400 Nm	–	●	–	**B4**
		7000 Nm	–	–	●	**B7**

Seals

09	NBR (nitrile rubber)	**M**
	FKM (fluoroelastomer / Viton)	**V**

Single/two-speed operation

10	Single speed, standard direction of rotation	**1L**
	Bi-directional two speed, standard direction of rotation	**2WL**

Ports

11	Tapped with UNF thread (SAE J514)	**12**
	Tapped with UNF thread (SAE J514) (A and B ports SAE split flange metric bolt holes)	**42**

● = Available – = Not available

Ordering code

01	02	03	04	05	06		07	08	09	10	11	12	13	14	15	16
MCR					**Z**	**/**	**33**									

Studs

12	Without studs (no code)	

Speed sensor

13	Without sensor (no code)	
	Sensor ready	**P0**
	Sensor without regulator	**P1**
	Sensor with regulator	**P2**

Flushing

14	Without flushing (no code)	
	With flushing (see table on page 3)	**F1-F8**

Special order

15	Special feature	**SOXXX**

Other

16	Mark in text here	*

Footer from page 7

1) Not available for E-Type
2) Ensure motor case is filled with oil prior to start-up. See instruction manual 15215-B.
3) For installation and maintenance details, please see instruction manual 15215-B.
4) For use with environmentally acceptable fluids HEES, HEPG, HETG, fluoroelastomer / Viton seals must be specified.
5) Extension of the allowable temperature range may be possible depending on specification. Please consult Bosch Rexroth Engineering Department in Glenrothes for further details.
6) Maximum values should only be applied for a small portion of the duty cycle. Please consult Bosch Rexroth Engineering Department in Glenrothes for motor life calculations based on particular operating cases.
7) When operating motors in series, please consult Bosch Rexroth Engineering Department in Glenrothes.
8) For continuous operation at speeds <5 rpm please consult Bosch Rexroth Engineering Department in Glenrothes.
9) Based on nominal no-load Δp of 20 bar in full-displacement mode.
10) Warning! During the running in period of the motor (min. 20 hrs) it should not be run unloaded at >100 rpm.
11) Guide values for up to 5000 hours of motor operation (ISO VG46 at 50 °C).
12) Maximum pressure is restricted according to maximum torque

Note

- Motor performance values are based on theoretical calculations.
- Efficiencies are not taken into consideration for theoretical calculations.
- Brake torque accounts for tolerances. Values are based when used with standard mineral oil (HLP).

Please refer the related foot notes for more details.

Technical data

Frame size			**MCR3**[1]	**MCR5**	**MCR10**[1]				
Type of mounting			Flange mounting, face mounting						
Pipe connections[2][3]			Threaded per SAE J514; Flanged per SAE J518						
Shaft loading			see page 9						
Weight			**MCR3D**	**MCR5D**	**MCR5E**	**MCR10D**			
Single speed (1L)	m	kg	21	39	36	62			
Two speed (2WL)	m	kg	27	47	44	67			
Hydraulic fluid[4]									
Fluid cleaniness			ISO 4406, Class 20/18/15						
Fluid viscosity range	$v_{min/max}$	mm²/s	10 to 2000						
Fluid temperature range[5]	$\theta_{min/max}$	°C	-20 to +85						
Pressure			Low displacement				High displacement		
Operating pressure	p_{nom}	bar	250				250		
Maximum differential pressure[6][7]	Δp_{max}	bar	450				400		
Maximum pressure at port **A** or **B**[6][7]	p_{max}	bar	470				420		
Maximum case drain pressure	$p_{case\ max}$	bar	10				10		
Motor performance MCR3									
Displacement	V_g	cm³/rev	**160**	**225**	**255**	**280**	**325**	**365**	**400**
Specific torque		Nm/bar	3	4	4	4	5	6	6
Maximum torque[6][12]	T_{max}	Nm	1146	1500	1500	1500	1500	1500	1500
Minimum speed for smooth running[8]	n_{min}	rpm	**0.5**	**0.5**	**0.5**	**0.5**	**0.5**	**0.5**	**0.5**
Maximum speed (1L)[9][10]	n_{max}	rpm	**670**	**475**	**420**	**385**	**330**	**295**	**270**
Maximum speed (2WL)[9][10]	n_{max}	rpm	**875**	**620**	**550**	**500**	**430**	**385**	**350**
Continuous operating power[10]	P	kW	11.64	15.34	15.17	17.48	11.61	11.38	14.99
Motor performance MCR5									
Displacement	V_g	cm³/rev	380	470	520	565	620	680	750	820
Specific torque		Nm/bar	6	7	8	9	10	11	12	13
Maximum torque[6][12]	T_{max}	Nm	2722	3000	3000	3000	3000	3000	3000	3000
Minimum speed for smooth running[8]	n_{min}	rpm	0.5	0.5	0.5	0.5	0.5	0.5	0.5	0.5
Maximum speed (1L)[9][10]	n_{max}	rpm	475	385	350	320	290	265	240	220
Maximum speed (2WL)[9][10]	n_{max}	rpm	570	465	420	385	350	320	290	265
Continuous operating power[10]	P	kW	38.01	38.14	37.86	42.42	26.52	25.85	24.42	31.98
Motor performance MCR10									
Displacement	V_g	cm³/rev	780	860	940		1120	1250	1340	
Specific torque		Nm/bar	12	14	15		18	20	21	
Maximum torque[6][12]	T_{max}	Nm	4800	4800	4800		4800	4800	4800	
Minimum speed for smooth running[8]	n_{min}	rpm	0.5	0.5	0.5		0.5	0.5	0.5	
Maximum speed (1L and 2WL)[9][10]	n_{max}	rpm	215	195	180		150	135	125	
Continuous operating power[10]	P	kW	50.21	55.67	52.82		38	42.34	38.81	
Brake			**MCR3D**		**MCR5D, MCR5E**		**MCR5D, MCR5E**		**MCR10D**
Holding brake (disc brake)			**B2**		**B2**		**B4**		**B7**
Minimum holding torque	$t_{min/max}$	Nm	2200		2200		4400		7000
Release pressure (min)	$p_{rel\ min}$	bar	11		11		11		11
Release pressure (max)	$p_{rel\ max}$	bar	15		15		15		15
Maximum pressure at brake port „Z“	p_{max}	bar	40		40		40		40
Oil volume to operate brake	V_{rel}	cm³	23		23		46		36

Footer on page 6

Efficiencies

▼ **Mechanical efficiency**

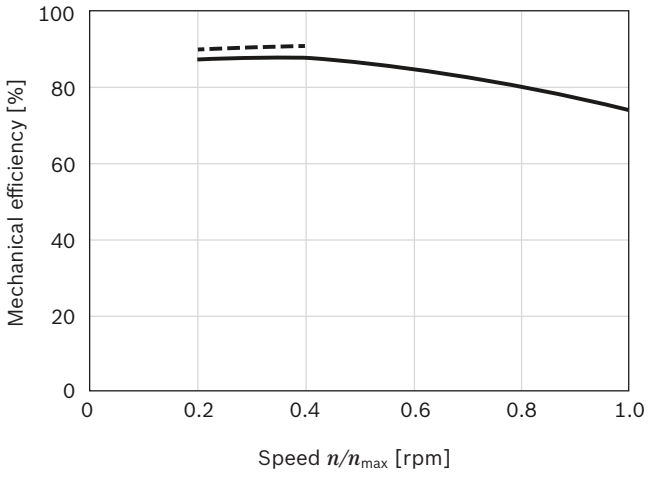

▼ **Charge pressure**

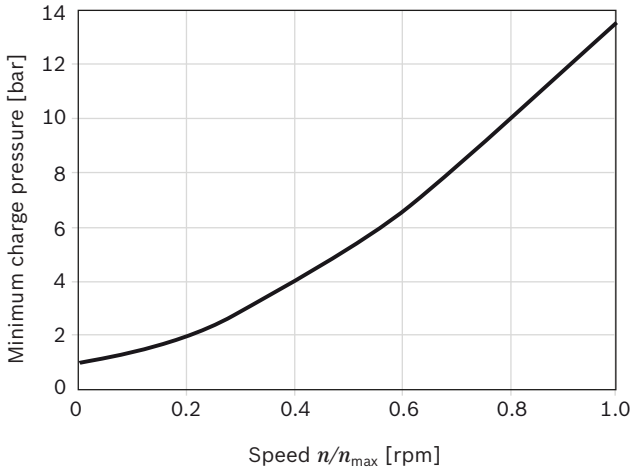

▼ **Volumetric efficiency**

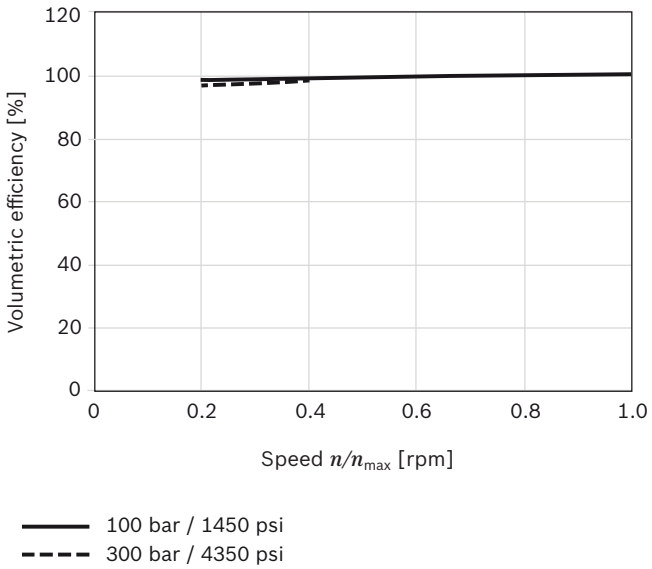

Note:

For specific performance information or operating conditions contact the Engineering Department at Bosch Rexroth, Glenrothes.

Permitted loading on drive shaft

Drive shaft ...3D L40...

Maximum radial load $F_{R\,max}$ (with axial load F_{ax} = 0)

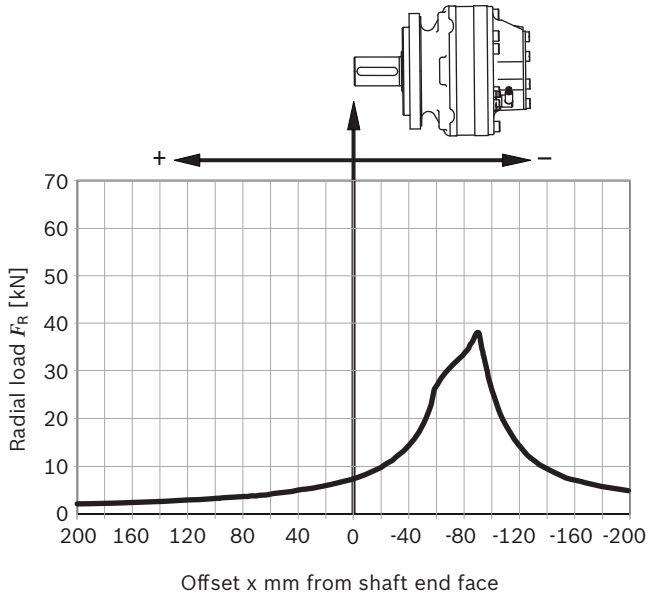

Maximum axial load $F_{ax\,max}$ (with radial load F_R = 0):

$F_{ax\,max}$ = 30200 N ← +

$F_{ax\,max}$ = 27000 N → –

Drive shaft ...10D L60...

Maximum radial load $F_{R\,max}$ (with axial load F_{ax} = 0)

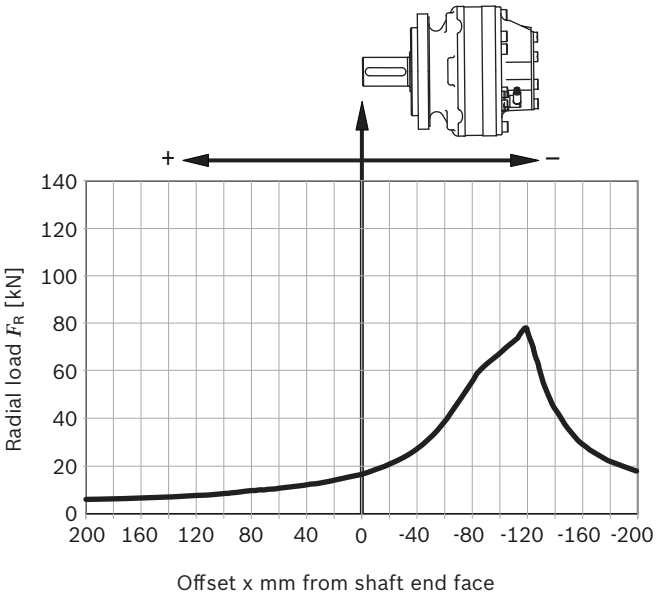

Maximum axial load $F_{ax\,max}$ (with radial load F_R = 0):

$F_{ax\,max}$ = 78700 N ← +

$F_{ax\,max}$ = 63400 N → –

Drive shaft ...5D L50...5E L50...

Maximum radial load $F_{R\,max}$ (with axial load F_{ax} = 0)

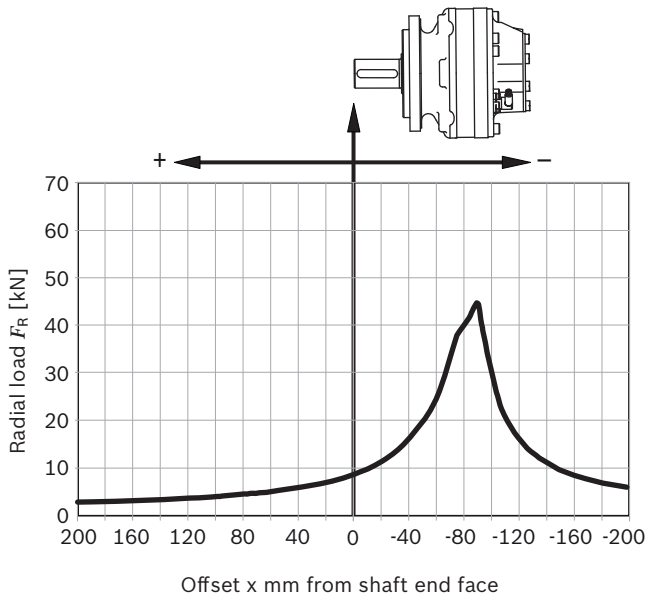

Maximum axial load $F_{ax\,max}$ (with radial load F_R = 0):

$F_{ax\,max}$ = 50000 N ← +

$F_{ax\,max}$ = 32000 N → –

Note:

- These values and graphs are for initial guidance only
- For actual motor life calculations under typical or specified duty cycles, contact Bosch Rexroth Engineering Department in Glenrothes

Dimensions

MCR-D

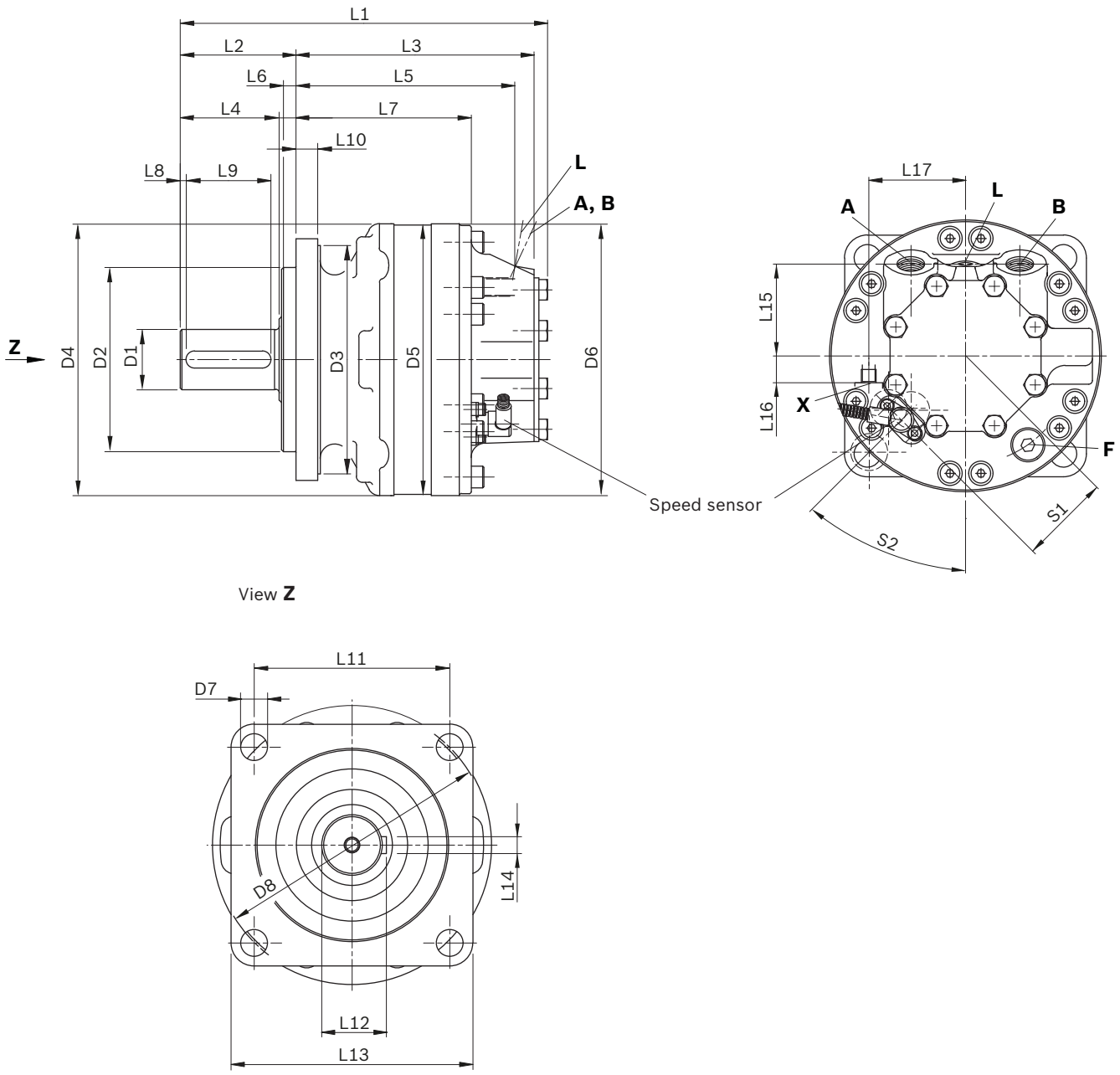

Before finalizing your design, request a binding installation drawing.
Dimensions in mm.

Single speed (1L)

Motor	D1	D2	D3	D4	D5	D6	D7	D8	L1	L2	L3	L4	L5	L6
MCR3	ø40	ø125	ø134	–	ø180	–	ø14	ø160	281.3	114.4	167	84.5	133	9
MCR5	ø50	ø152.4	ø189	ø225	ø223	ø225	ø22	ø229	304	96	197	82	181	10.5
MCR10	ø60	ø152.4	ø189	ø264	ø262	ø262	ø20.5	ø229	407	123	259	105	223	10.5

Motor	L7	L8	L9	L10	L11	L12	L13	L14	L15	S1	S2
MCR3	112	5	70	14	113	43	140	12	66.5	63.5	90°
MCR5	145	5	70	18	162	53.5	200	14	76	75	45°
MCR10	182	6	80	19	162	64	200	18	98	89	45°

Two speed (2WL)

Motor	D1	D2	D3	D4	D5	D6	D7	D8	L1	L2	L3	L4	L5	L6
MCR3	ø40	–	ø134	–	ø180	–	ø14	ø160	341	114.4	226.7	84.5	105.7	9
MCR5	ø50	ø152.4	ø189	ø225	ø223	ø225	ø22	ø229	343	96	237	82	159	10.5
MCR10	ø60	ø152.4	ø189	ø264	ø262	ø262	ø20.5	ø229	432	123	283.5	105	247.5	10.5

Motor	L7	L8	L9	L10	L11	L12	L13	L14	L15	L16	L17	S1	S2
MCR3	112	5	70	14	113	43	140	12	67.5	26	65	63.5	30°
MCR5	–	5	70	18	162	53.5	200	14	105	23.5	78	75	45°
MCR10	180.5	5	80	19	162	64	200	18	88	25	107	89	45°

Ports

Motor	Designation	Port function	Code	Size	p_{max} [bar]	State[2)]
MCR3	**A, B**	Inlet, outlet	SAE J514	7/8-4 UNF	470/420[1)]	O
	L	Case drain	SAE J514	9/16-18 UNF	10	O
	F	Filler port	SAE J514	3/4-16 UNF	10	X
	X	2 speed port	SAE J514	9/16-18 UNF	35	O
MCR5	**A, B**	Inlet, outlet	SAE J514	1 1/16-12 UNF	470/420[1)]	O
	L	Case drain	SAE J514	3/4-16 UNF	10	O
	F	Filler port	SAE J514	3/4-16 UNF	10	X
	X	2 speed port	SAE J514	9/16-18 UNF	35	O
MCR10	**A, B**	Inlet, outlet	SAE J518[3)]	3/4 in	470/420[1)]	O
	L	Case drain	SAE J514	3/4-16 UNF	10	O
	F	Filler port	SAE J514	3/4-16 UNF	10	X
	X	2 speed port	SAE J514	9/16-18 UNF	35	O

1) Depends on nominal size
2) O = Must be connected (plugged on delivery)
X = Plugged (in normal operation)
3) Only dimensions according to SAE J518
(Code 62 - high pressure series)

RE 15196/12.2012, Bosch Rexroth AG

Dimensions

MCR-E

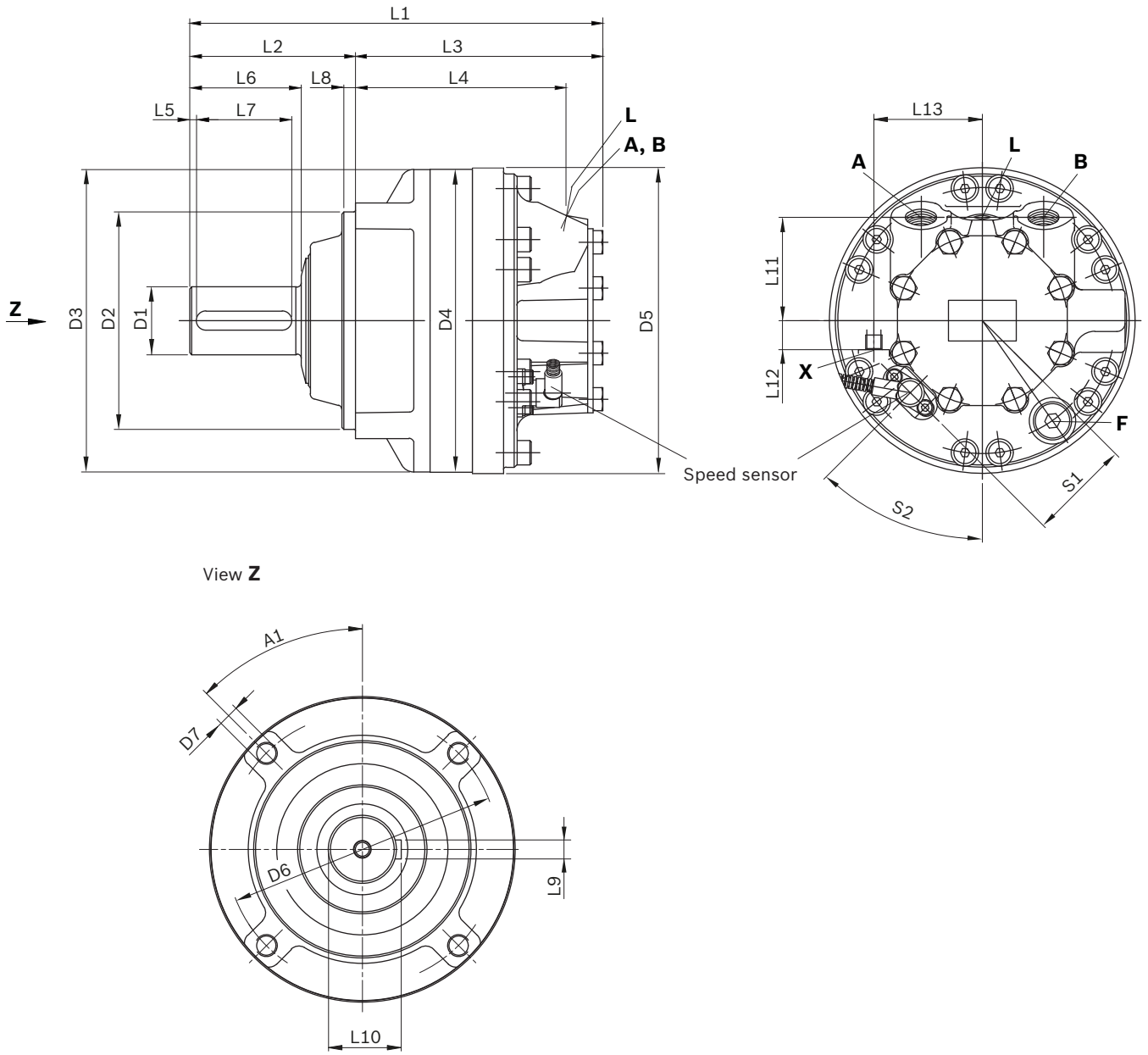

Before finalizing your design, request a binding installation drawing.
Dimensions in mm.

Single speed (1L)

Motor	D1	D2	D3	D4	D5	D6	D7	L1	L2	L3	L4	L5
MCR5	ø50	ø160	ø222.5	ø223	ø225	ø200	M16	304	122	182	155	5

Motor	L6	L7	L8	L9	L10	L11	A1	S1	S2
MCR5	82	70	8.5	14	53.45	76	45°	75	45°

Two speed (2WL)

Motor	D1	D2	D3	D4	D5	D6	D7	L1	L2	L3	L4	L5
MCR5	ø50	ø160	ø222.5	ø223	ø225	ø200	M16	343	122	221	134.4	5

Motor	L6	L7	L8	L9	L10	L11	L12	L13	A1	S1	S2
MCR5	82	70	8.5	14	53.45	76	23.5	78	45°	75	45°

Ports

Motor	Designation	Port function	Code	Size	p_{max} [bar]	State[2)]
MCR5	**A, B**	Inlet, outlet	SAE J514	1 1/16-12 UNF	470/420[1)]	O
	L	Case drain	SAE J514	3/4-16 UNF	10	O
	F	Filler port	SAE J514	3/4-16 UNF	10	X
	X	2 speed port	SAE J514	9/16-18 UNF	35	O

1) Depends on nominal size
2) O = Must be connected (plugged on delivery)
X = Plugged (in normal operation)
3) Only dimensions according to SAE J518
(Code 62 - high pressure series)

RE 15196/12.2012, Bosch Rexroth AG

Holding brake (multi-disc brake)

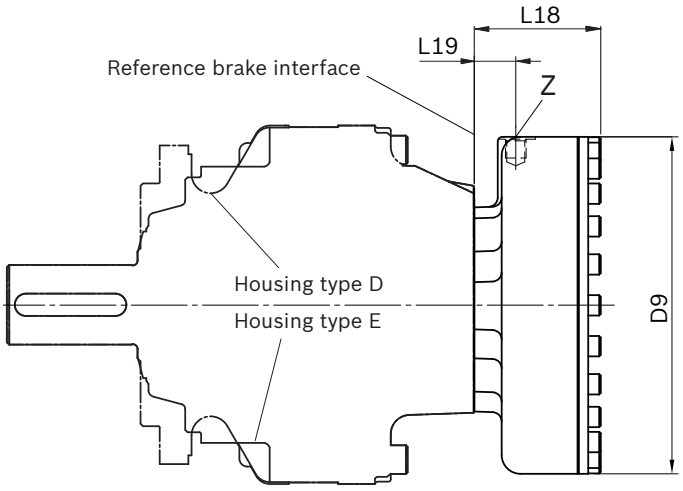

Motor	Brake	L18	L19	D9
MCR3	**B2**	67.3	22	ø174
MCR5	**B2**	67.3	22	ø174
	B4	80.7	26.5	ø215
MCR10	**B7**	97.8	29	ø251

Motor	Designation	Port function	Code	Size	p_{max} [bar]	State[1)]
MCR3	**Z**	Brake port	SAE J515	9/16-18 SAE	30	O
MCR5	**Z**	Brake port	SAE J515	9/16-18 SAE	30	O
MCR10	**Z**	Brake port	SAE J515	9/16-18 SAE	30	O

1) O = Must be connected (plugged on delivery)

Before finalizing your design, request a binding installation drawing.
Dimensions in mm.

B_15_96/12_2012_Bosch_Rexroth_AG

Selection guide

Data sheet	Motor type Application		Frame size 3 160..400 cc	5 380..820 cc	6 820..920 cc	10 780..1340 cc	15 1130..2150 cc	20 1750..3000 cc
15198	**MCR-F** Wheel drives		●	●	–	●	●	–
15200	**MCR-W** Heavy duty wheel drives		●	●	–	●	–	–
15195	**MCR-A** Frame integrated drives		●	●	–	●	–	–
15199	**MCR-H** Integrated drives		●	●	–	●	●	●
15221	**MCR-T** Track drives		–	●	●	●	–	–
15223	**MCR-R Series 40** Hydraulic drive assist		–	–	–	●	–	–
15214	**MCR-X** Slew drives		●	●	–	–	–	–
15197	**MCR-C** Compact drives		–	–	–	–	–	●
15196	**MCR-D** Industrial applications		●	●	–	●	–	–
	MCR-E Industrial applications		–	●	–	–	–	–

Gears

Planetary gear units for mobile applications

Designation	Output torque	Data sheet	Page
Hydrostatic drives HYDROTRAC GFT	9...450 kNm	77110	869
Compact hydrostatic drives HYDROTRAC GFT 45 T2/T3	45 kNm	77115	889
Drive unit for crawler track equipment, series 2000 – HYDROTRAC GFT	13,5...42,5 kNm	77116	893
Planetary gearboxes for mobile applications HYDROTRAC GFT 8000 Series 40	10...130 kNm	77117	895
Planetary gearboxes for mobile applications HYDROTRAC GFT 8130 / 8140 Series 30	20...30 kNm	77128	899
Swing drives MOBILEX GFB	4...6,83 kNm	77201	903
Drive unit for revolving superstructures, series 2000 – MOBILEX GFB	4...14,5 kNm	77206	919
Winch drives MOBILEX GFT-W	14...325 kNm	77502	921

Hydrostatic drives
HYDROTRAC GFT
for mobile applications

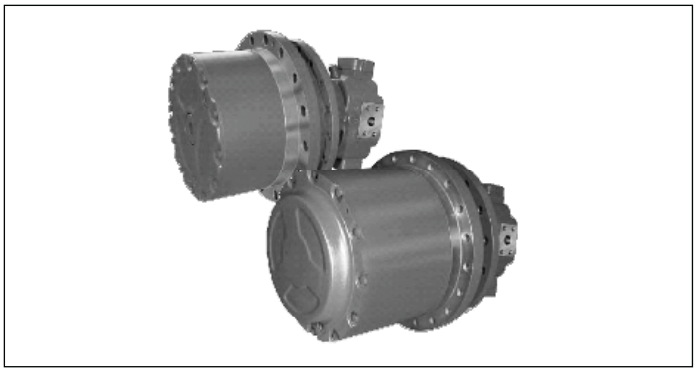

- Sizes GFT 9 to GFT 450
- Output torques from 9000 to 450000 Nm

Features

- Compact, space-saving planetary gearbox design
- Planet wheels carried in full-complement bearings
- Robust main bearing system
- Simple mounting
- Easy oil change
- Integrated static multiple disk brake
- Low-noise running operation

Contents

Description, gear unit design, hydraulic motors, static spring pressure multi-disk brake, disconnect device, sealing system, oil changes, design variants, type code 2
Dimensions and technical data for output torques from:
9000 Nm to 36000 Nm 4
40000 Nm to 110000 Nm 6
160000 Nm to 450000 Nm 8
Customer specification wheel application 10
Customer specification chain application 13
Customer specification drum application 16

RE 77110/02.2018 Bosch Rexroth AG

Description

Rexroth compact hydrostatic HYDROTRAC GFT drives are the ideal driving components for wheeles or track-laying vehicles and other mobile equipment. They are the perfect choice for every conceivable moving or turning application.

The drives are extremely compact and thus may also be installed in space-critical mounting configurations. The drives‘ load capacity and availability is extraordinary thanks to the use of case-hardened annulus gears.

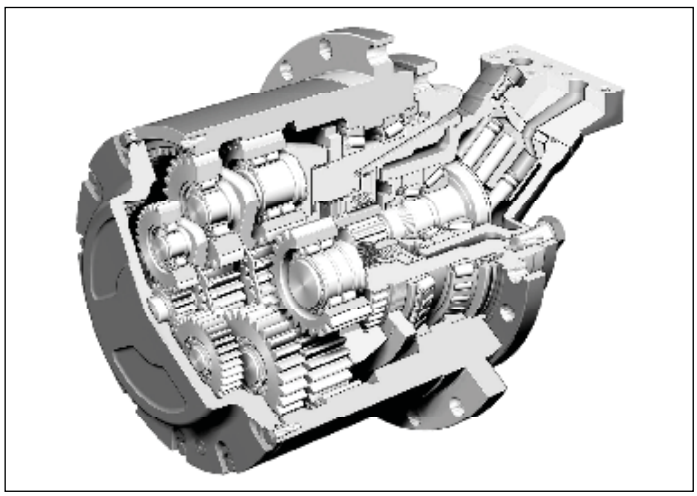

Three-stage compact hydrostatic drive
Rexroth HYDROTRAC GFT with multiplate parking device and Rexroth plug-type motor

The gearteeth design reflects both standard requirements and in-house operating strength calculations based on our comprehensive know-how and optimally adapted to our modern fabrication processes.
The drives feature maximum total efficiency ratings which, inter alia, is due to the use of Rexroth plug-type motors.
The drives described in this bulletin are constantly reviewed and advanced. Other design variants with deviating transmission, dimensions and power characteristics are available if so requested for specific applications.

Gearbox design

Gearbox design is based on long years of experience and reflects not only the customary standard design regulations but also satisfies operational strength requirements as per DIN 3990, ISO 6336, AGMA, GL or DNV. The output torque values indicated are short-term admissible peak torques meant for excavator travel drive applications. For other applications deviating output torques differing from those specified may apply to the respective gearbox. Even in the project stage we are prepared to offer application-specific consultation to customers aimed at finding the optimum drive configuration

Hydraulic Motors

Rexroth hydraulic motors are preferably integrated in a space-saving manner as flanged-on fixed or variable displacement units plugged into the gearbox.

Spring loaded multiplate parking brake integrated

As a standard supply feature the gearbox comes with one spring-loaded hydraulically released multiplate parking brake integrated on the input side. The static multiplate parking brake system is only a parking brake. The parking brake torque will suit the respective motor torque.

Disconnecting device

If requested, some of the drive systems may also be provided with a mechanical disconnecting device so that, if time is of essence, the equipment can be towed without damaging the hydraulic system.

Sealing system

An axial mechanical seal is mounted between the stationary and rotating gearbox sections. THis prevents moisture and dirt from entering the drive even under extreme operating conditions.

Oil changes

Save for regular oil changes the drives do not require maintenance. Oil changes may conveniently be made from the outside. Recommendations as to lube oils are given in the operating manual.

Design variants

Model designations 1000 - 9000 indicate basic size and design variants that are readily available to our customers. To suit specific application requirements other models can also be furnished upon request. Depending on currently furnished units and transmission ratios many drives are available on preferential terms offering favorable prices and improved delivery times. If you are interested, please let us know.

To suit the required ratio the gearboxes are of two- (T2) or three-stage (T3) design. If so requested, gear models 330 and 450 may be provided with an additional preliminary stage and in that case will be of four-stage design (T4). Please also observe our gearboxes series HYDROTRAC GFT 2000 (RE 77116) and HYDROTRAC GFT 8000 (RE 77117, RE 77128)

Hydrostatic drives HYDROTRAC GFT overview

Type/design variant GFT	Output torque $T_{2\,max}$ Nm	Gear ratio from/to i
GFT 9 T2	9000	47.6 - 55.3
GFT 13 T2	13000	22.6 - 37.6
GFT 17 T2	17000	37.6 - 54
GFT 17 T3	17000	77.9 - 88.2
GFT 24 T3	24000	90.1 - 137.2
GFT 26 T2	26000	42.9 - 62
GFT 34 T2	34000	42.9 - 50,5
GFT 36 T3	36000	115 - 138.8
GFT 40 T2	40000	35.9 - 59.1
GFT 50 T3	50000	73.9 - 177.5
GFT 60 T3	60000	94.8 - 169,9
GFT 65 T2	65000	55.4
GFT 80 T3	80000	99 - 215
GFT 110 T3	110000	87.6 - 173.9
GFT 160 T3	160000	210.8 - 251
GFT 220 T3 / R3	220000	67.7 - 365
GFT 330 T3	330000	168.9 - 302.4
GFT 330 T4	330000 / 380000	451.7 - 826.6
GFT 450 T4	450000	421.7

Type code

HYDROTRAC GFT 80 T3 2000 SL

Travel drive GFT

Size
(Size = Output torque T_2 [kNm]

T = Track laying
R = Wheel drive

Number of gear stages

Strength main-bearings

Internal code

Dimensions

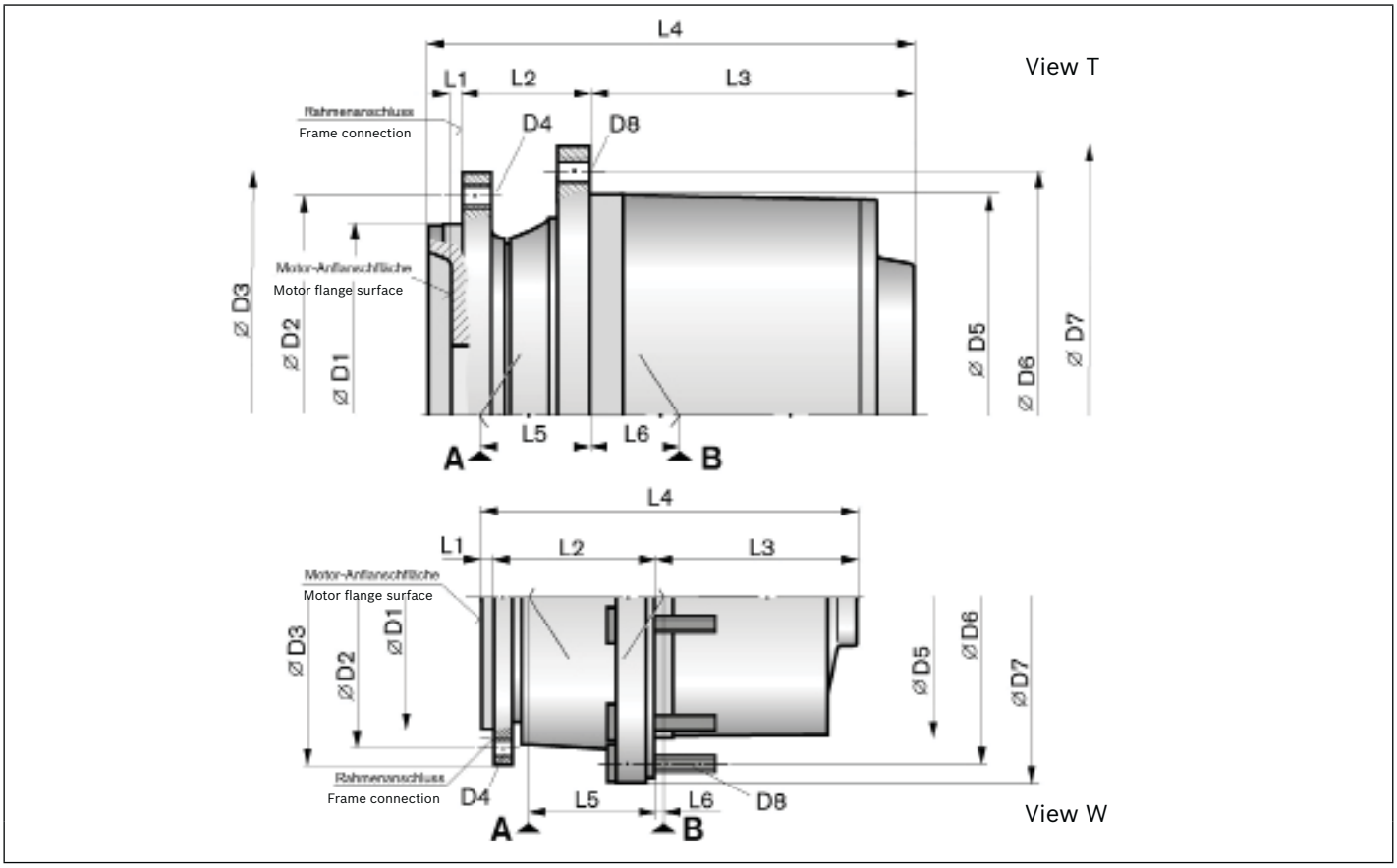

View T = turas attachment possible, view W = wheel rim attachment

Technical data

Type/design variant GFT	Output torque $T_{2\,max}$ Nm	Gear ratio i	Holding torque $T_{Br\,max}$ Nm	Hydraulic motor
GFT 9 T2 3000	9000	47.6 • 55.3	215	A6VE 28 / A2FE 32
GFT 13 T2 4000/1	13000	26.4 • 32.1 • 37.6	400	A6VE 55 • 60
GFT 13 T2 4000/2	13000	26.4 • 32.1 • 37.6	400	A2FE 45 • 56 • 63
GFT 13 T2 7000/1	13000	22.6 • 26.4 • 32.1	400	A6VE 55 • 60
GFT 13 T2 7000/2	13000	22.6 • 26.4 • 32.1	575	A6VE 55 / A2FE 45 • 56 • 63
GFT 17 T2 3000/1	17000	54	350	A6VE 55 / A10VE 63 / A2FE 45 • 56 • 63
GFT 17 T2 9000/SL	17000	37.6 • 45.4	-	A6VE 55
GFT 17 T3 1000	17000	77.9	250	A6VE 28 / A2FE 28
GFT 17 T3 9000/2 SL • 9000/3 SL	17000	77.9 • 88.2	-	A6VE 28
GFT 17 T3 9000/4 SL	17000	88.2	-	A10VE 45 / A10VEC 45
GFT 24 T3 1000	24000	90.1 • 102.6 • 120.5 • 137.2	300	A6VE 55 / A2FE 45 • 56 • 63
GFT 24 T3 5000	24000	120.5 • 137.2	250	A6VE 55 / A10VEC 45 / A2FE 45 • 56 • 63
GFT 24 T3 9000	24000	120.5 • 137.2	300	A10VEC 45
GFT 26 T2 1000	26000	42.9 • 50.5 • 62	715	A6VE 80
GFT 34 T2 4000	34000	42.9 • 50.5	-	A6VE 107
GFT 36 T3 3000/1	36000	115 • 138.8	715	A6VE 55 / A2FE 45 • 56 • 63
GFT 36 T3 3000/2	36000	115 • 138.8	715	A6VE 80 / A2FE 80 • 90

GFT 36 T3 3000/**2** = index no. for different structural lengths, diameter or motor attachment

Dimensions, bearing load ratings and masses

Type/design variant GFT	D1	D2	D3	D4	D5	D6	D7	D8
					mm			
GFT 9 T2 3000	210	244	268	12x M14	230	260	284	16x M16
GFT 13 T2 4000/1	240	275	300	18x M16	270	305	335	16x M16
GFT 13 T2 4000/2	240	275	300	18x M16	270	305	335	16x M16
GFT 13 T2 7000/1	240	270	300	17x M16	280	335	372	10x M22x1.5
GFT 13 T2 7000/2	240	270	300	17x M16	280	335	372	10x M22x1.5
GFT 17 T2 3000/1	250	290	320	16x M20	280	305	330	16x M16
GFT 17 T2 9000/SL	250	305	330	18x M16	260	300	335	10x M22x1.5
GFT 17 T3 1000	240	320	300	18x M16	270	305	330	20x M16
GFT 17 T3 9000/2 SL	240	320	310	12x M16	260	300	335	20x M16
GFT 17 T3 9000/3 SL	250	330	330	18x M16 (S)	260	300	335	20x M16
GFT 17 T3 9000/4 SL	290	320	345	16x M16	324	364	390	15x M16
GFT 24 T3 1000	240	285	320	20x M20	280	305	330	20x M16 / 30x M16
GFT 24 T3 5000	240	275	304	18x M16	320	350	380	20x M16
GFT 24 T3 9000	290	320	345	16x M16	280	305	330	20x M16
GFT 26 T2 1000	270	310	350	16x M20	320	350	380	20x M16
GFT 34 T2 4000	410	380	420	20x ø18	325	381	420	12x M22x1.5
GFT 36 T3 3000/1	270	310	350	16x M20	320	350	380	20x M16x1.5
GFT 36 T3 3000/2	270	310	350	16x M20	320	350	380	20x M16x1.5

Type/design variant GFT	L1	L2	L3	L4	L5	L6	A + B		Mass	View
							C	Co		
			mm				kN		kg	
GFT 9 T2 3000	-	60	149	232	18	64	132	255	50	T
GFT 13 T2 4000/1	8	75	149	232	49	54	140	290	85	T
GFT 13 T2 4000/2	30	75	149	254	49	54	140	290	85	T
GFT 13 T2 7000/1	8	90	136	234	64	39	140	290	92	W
GFT 13 T2 7000/2	14	90	146	261	85	60	191	394	92	W
GFT 17 T2 3000/1	8	82	152	242	78	69	108	142	90	T
GFT 17 T2 3000/1	8	82	155	245	56	47	140	290	90	W
GFT 17 T2 9000/SL	8	82	155	245	56	47	161	333	90	W
GFT 17 T3 1000	27	75	181	283	71	76	108	142	100	T
GFT 17 T3 9000/2 SL	8	75	184	267	49	54	140	290	95	W
GFT 17 T3 9000/3 SL	8	75	184	267	49	54	140	290	95	T
GFT 17 T3 9000/4 SL	14	84	201	299	71	76	108	142	95	T
GFT 24 T3 1000	8	82	189.5	279.5	56	47	140	290	95	T
GFT 24 T3 5000	16	82	209.5	307.5	56	47	140	290	110	T
GFT 24 T3 9000	16	82	209.5	307.5	56	47	140	290	100	T
GFT 26 T2 1000	20	90	220	330	58	50	186	400	145	T
GFT 34 T2 4000	12	151	226	389	60	62	399	806	170	W
GFT 36 T3 3000/1	15	90	200	333	56.5	56.5	170	405	125	T
GFT 36 T3 3000/2	10	90	200	300	56.5	56.5	170	405	125	T

Dimensions

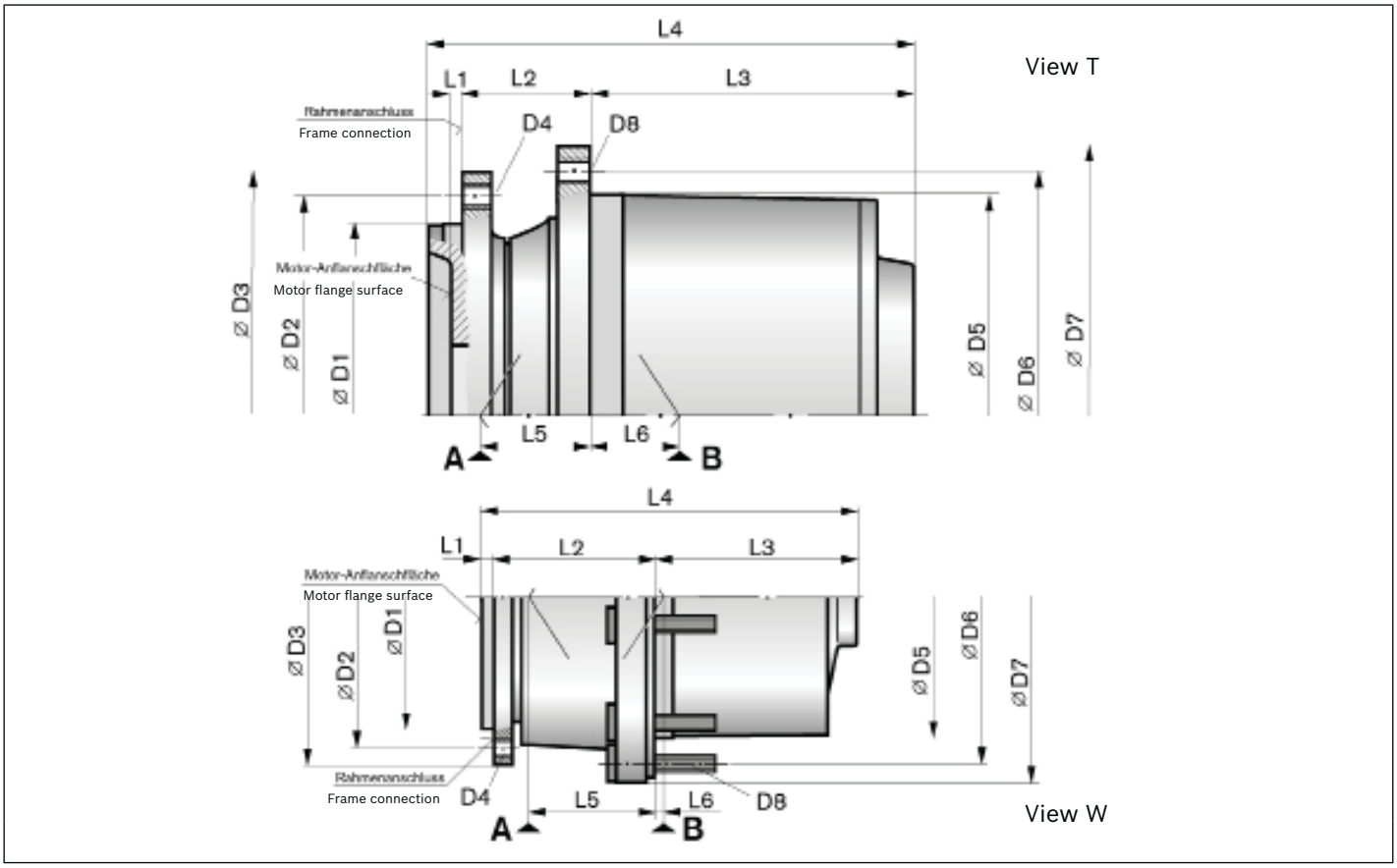

View T = turas attachment possible, view W = wheel rim attachment

Technical data

Type/design variant GFT	Output torque $T_{2\ max}$ Nm	Gear ratio i	Holding torque $T_{Br\ max}$ Nm	Hydraulic motor
GFT 40 T2 2000 SL	40000	35.9 • 41 • 48.3 • 59.1	800	A6VM 107 • 115 • 160 • 200
GFT 40 T2 9000	40000	35.9 • 41 • 48.3 • 59.1	800	A6VE 107 • 115 • 160
GFT 50 T3 1000/1	50000	84.2 • 91.1 • 125.7	800	A6VE 80 • 107
GFT 50 T3 1000/2	50000	84.2 • 91.1 • 125.7	800	A6VE 55 / A2FE 45 • 56 • 63
GFT 50 T3 3000	50000	73.9 • 91.1 • 125.7	800	A6VE 80 • 107
GFT 50 T3 9000 SL	50000	73.9 • 91.1 • 125.7	800	A6VE 80 / A2FE 80
GFT 50 T3 9000/2	50000	84.2 • 91.1	800	A6VE 80
GFT 50 T3 9000/3	50000	84.2 • 91.1 • 125.7	800	A2FE 63
GFT 60 T3 7000/1	60000	94.8 • 105.5 • 119.8 • 139.9 • 169.9	725	A6VE 80 • 107 / A2FE 80 • 90
GFT 65 T2 1000	65000	55.4	1060	A6VE 160
GFT 80 T3 1000 • 2000	80000	99 • 126.9 • 149.9 • 215	1025	A6VE 107 • 160 / A2FE 107 • 125
GFT 110 T3 1000	110000	95.8 • 114.8 • 173.9	1025	A6VE 107 • 160 / A2FE 107 • 125 • 160 • 180
GFT 110 T3 9000	110000	87.6 • 95.8 • 114.8 • 128.6 • 147.2 • 173.9	1100	A6VE 160 / A2FE 160
GFT 110 T3 9000 SL	110000	87.6 • 95.8 • 128.6 • 173.9	1100	A6VE 107 • 160 / A2FE 107 • 125

GFT 50 T3 9000/**3** = index no. for different structural lengths, diameter or motor attachment

Dimensions, bearing load ratings and masses

Type/design variant GFT	D1	D2	D3	D4	D5	D6	D7	D8
					mm			
GFT 40 T2 2000 SL	330	370	410	20x M20	360	400	440	16x M20
GFT 40 T2 9000	330	370	410	20x M20	360	400	440	16x M20
GFT 50 T3 1000/1	270	310	350	18x M20x1.5	350	400	430	16x ø22
GFT 50 T3 1000/2	270	310	350	16x M20	350	400	430	16x M20x1.5
GFT 50 T3 3000	330	370	410	20x M20	360	400	440	16x M20
GFT 50 T3 9000 SL	270	310	350	16x M20	350	400	440	16x M20
GFT 50 T3 9000/2	330	370	408	16x M20	365	405	435	22x M16
GFT 50 T3 9000/3	270	310	350	16x M20	350	405	430	16x M20x1.5
GFT 60 T3 7000/1	330	370	410	20x M20x1.5	400	450	490	20x M20x1.5
GFT 65 T2 1000	380	430	480	20x M24	430	480	520	24x M24
GFT 80 T3 1000	420	460	500	24x M20	460	510	550	24x M20
GFT 80 T3 2000	380	430	480	20x M24	430	480	520	20x M24
GFT 110 T3 1000	420	460	500	24x M24x3	460	500	540	36x M18x1.5 [1]
GFT 110 T3 9000	420	460	500	24x M24x3	460	500	530	36x M18x1.5
GFT 110 T3 9000 SL	460	520	570	24x M30	460	500	540	36x M18x1.5

[1] option: 36x ø22

Type/design variant GFT	L1	L2	L3	L4	L5	L6	A + B		Mass	View
							C	Co		
			mm				kN		kg	
GFT 40 T2 2000 SL	25	114	237.5	376.5	87	38	A 393 B 473	A 881 B 895	210	W
GFT 40 T2 9000	25	90	261.5	376.5	38	73	212	290	140	T
GFT 50 T3 1000/1	39.5	82	281.5	403	56.5	54	212	400	150	T
GFT 50 T3 1000/2	20	82	281.5	383.5	56.5	54	212	400	145	T
GFT 50 T3 3000	25	114	276	415	62	48	212	400	150	T
GFT 50 T3 9000 SL	15	82	318	415	45.5	79.5	393	400	145	T
GFT 50 T3 9000/2	25	100.5	304	429.5	70.5	40	212	400	145	T
GFT 50 T3 9000/3	20	82	282	383.5	56.5	54	212	806	170	T
GFT 60 T3 7000/1	25	90	308	423	55	62	250	405	165	T
GFT 65 T2 1000	-	148	245	415	128	20	A 250 B 480	A 480 B 950	340	T
GFT 80 T3 1000	21.5	165	300	486.5	108	25	A 509 B 480	A 1080 B 950	370	T
GFT 80 T3 2000	22	148	295	465	112	18			350	T
GFT 110 T3 1000	-	165	305	491.5	107	25	A 509 B 480	A 1080 B 950	210	T
GFT 110 T3 9000	21.5	165	305	491.5	107	24			215	T
GFT 110 T3 9000 SL	45	170	316.5	529.5	154	34	710	1560	505	T

Dimensions

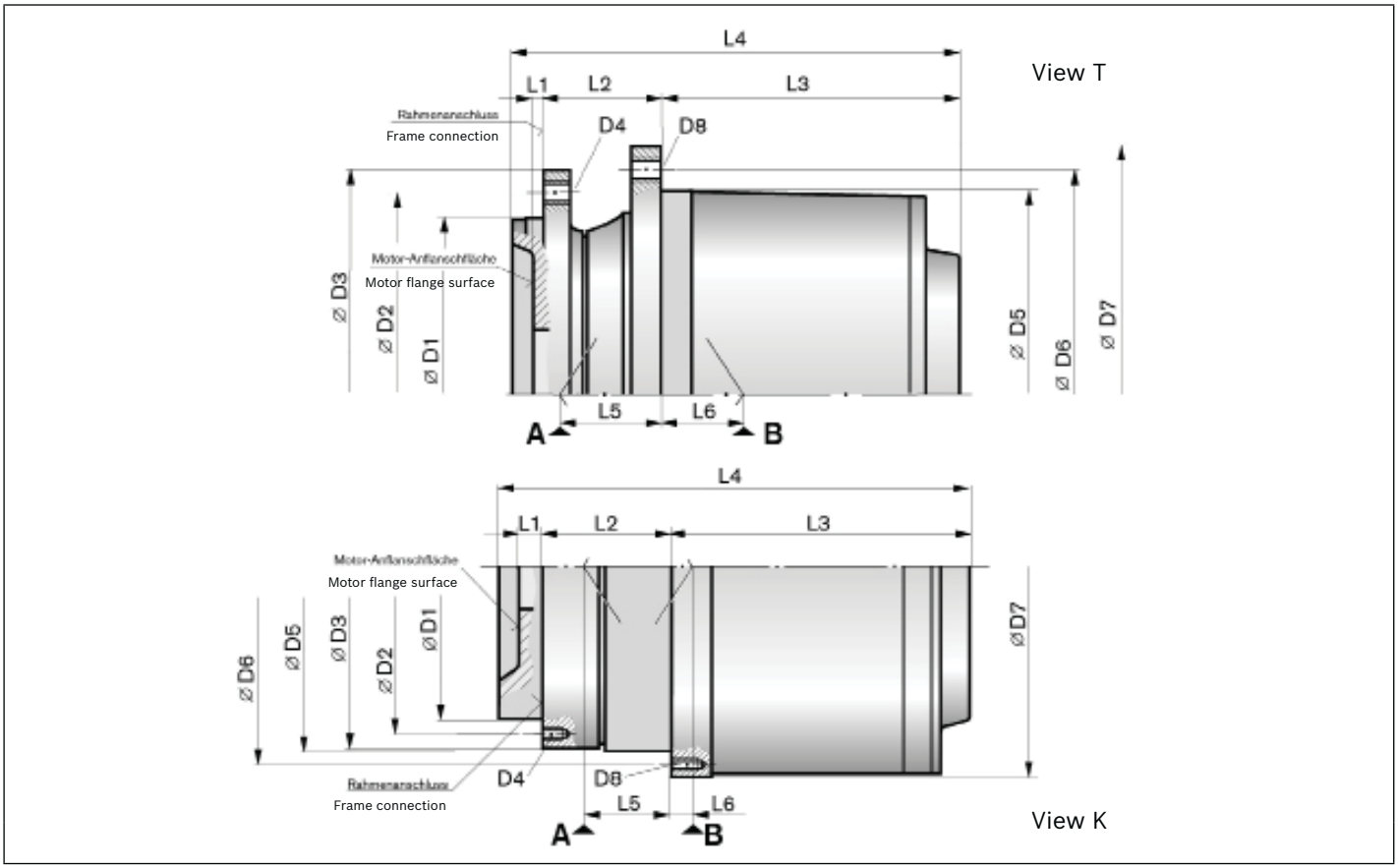

View T/K = turas attachment possible

Technical data

Type/design variant GFT	Output torque $T_{2\,max}$ Nm	Gear ratio i	Holding torque $T_{Br\,max}$ Nm	Hydraulic motor
GFT 160 T3 1000 • 9000	160000	210.8 • 251	1020	A6VE 107 • 160 / A2FE 107 • 125 • 160 • 180
GFT 220 T3 2000	220000	67.7 • 97.7 • 188.9 • 246 • 293	1100	A6VE 160 / A2FE 160 • 180
GFT 220 T3 9000/2	220000	67,7 • 97,7	-	A6VM 355
GFT 220 R3 9000/3	220000	145.4	1400	A6VM 200 • 215
GFT 220 T3 9000/4	220000	365	1100	A6VE 160 / A2FE 160 • 180
GFT 330 T3 2000 • 3000	330000	168.9 • 209.9 • 252.0 • 302.4	2500	A6VE 250 / A2FE 355
GFT 330 T3 9000	330000	302.4	2500	A6VE 250 / A6VM 200
GFT 330 T4 1000 [2)]	330000	826.6	-	-
GFT 330 T4 2000	330000	451.7	625	A6VE 160
GFT 450 T4 1000/1	450000	421.7	1450	A6VE 250 / A2FE 250

GFT 220 T3 9000/**4** = index no. for different structural lengths, diameter or motor attachment

[2)] Gearbox with angle gear stage on intput side

Dimensions, bearing load ratings and masses

Type/design variant GFT	D1	D2	D3	D4	D5	D6	D7	D8
					mm			
GFT 160 T3 1000	450	510	560	20xM30	535	600	650	30x M24x2
GFT 160 T3 9000	450	510	560	30x M24x2	535	600	650	30x M24x2
GFT 220 T3 2000	460	600	650	30x M30	610	680	735	24x M30
GFT 220 T3 9000/2	460	520	570	24x M30	610	680	735	24x ø33
GFT 220 R3 9000/3	460	600	650	30x M30	610	680	735	24x M30
GFT 220 T3 9000/4	450	515	568	29x M36x3	570	620	670	42x M30x2
GFT 330 T3 2000	580	680	735	30x M30	660	730	785	30x M30
GFT 330 T3 3000	580	680	735	30x M30	660	730	785	30x M30
GFT 330 T3 9000	450	515	568	32x M30x2	570	620	670	44x M24x2
GFT 330 T4 1000	580	680	735	30x M30	660	730	785	30x M30
GFT 330 T4 2000	580	680	735	30x M30	660	730	785	30x M30
GFT 450 T4 1000/1	450	515	568	29x M36x1.5	570	620	670	42x M30x1.5

Type/design variant GFT	L1	L2	L3	L4	L5	L6	A + B		Mass	View
							C	Co		
			mm				kN		kg	
GFT 160 T3 1000	30	168	340	538	138	26	688	1520	680	T
GFT 160 T3 9000	30	168	340	538	138	26	688	1520	680	T
GFT 220 T3 2000	45	170	350	565	155	35	710	1560	680	T
GFT 220 T3 9000/2	45	170	350	565	155	35	710	1560	850	T
GFT 220 R3 9000/3	45	170	350	565	155	35	710	1560	850	T
GFT 220 T3 9000/4	-	255	305	-	190	17	710	1560	880	K
GFT 330 T3 2000	150	125	400	675	190	25	1040	2450	1250	T
GFT 330 T3 3000	87	188	400	675	190	25	1040	2450	1230	T
GFT 330 T3 9000	45	253	442	740	178	37	1040	2450	1210	K
GFT 330 T4 1000	-	188	430	1175	190	25	1040	2450	1410	-
GFT 330 T4 2000	-	188	400	675	190	25	1040	2450	1320	T
GFT 450 T4 1000/1	13	255	512	810	175	19	1040	2450	1240	K

You wish to receive an offer for a HYDROTRAC GFT as a wheel drive?

Company: _____
Name/Dept.: _____
Place: _____
Phone: _____
E-mail: _____
Date: _____

Page 1/3

Please enclose existing drawings, diagrams, comments and the like.

Completing all fields is mandatory!
Exceptions see footnotes.

E_T negative

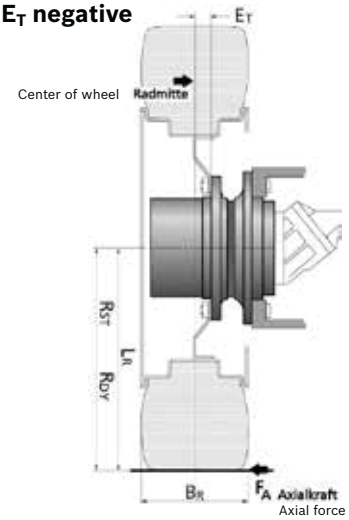

E_T positive

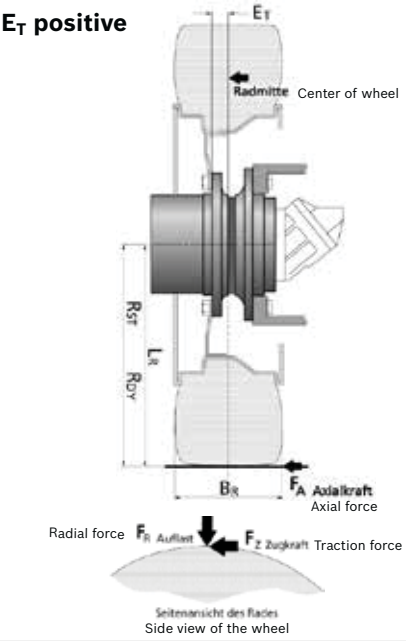

Type of machine _____

Machine weight	empty _____ loaded _____ t		
Number of driven wheels		_____	
Max. traction force of machine	F_Z	_____	N
Gradeability [1]	s	_____	%
Total number of wheels		_____	
Tyre radius			
- static	R_{ST}	_____	mm
- dynamic	R_{DY}	_____	mm
Max. travel speed	V_{max}	_____	km/h
Working speed	V	_____	km/h
Ambient temperature	from/to	_____	°C
Tyre width	B_R	_____	mm
Wheel rim diameter [1]	D_F	_____	inch
Wheel offset	E_T	_____	mm
Center diameter / wheel rim [1]		_____	mm
Bolt circle diameter / wheel rim [1]		_____	mm
Wheel stud diameter [1]		_____	mm
Number of studs [1]		_____	
Radial force each drive	F_R	_____	N
Axial force each drive	F_A	_____	N

Techn. gearbox data

Selected gearbox type	GFT	_____	
Max. output torque	$T_{2\,max}$	_____	kNm
Max. output speed	$n_{2\,max}$	_____	1/min
Gear ratio [1]	i	_____	
Disconnect mechanisim	☐ no ☐ yes		
Multi-disc parking brake	☐ yes ☐ no		
Min. parking torque of multi-disc parking brake		_____	Nm
Release pressure, max.	P_{max}	_____	bar
Release pressure, min. [1]	P_{min}	_____	bar
Dynamic brake	☐ yes ☐ no		
Top coat specific	☐ no ☐ yes		
Color	RAL	_____	

[1] Optional entry

You wish to receive an offer for a HYDROTRAC GFT as a wheel drive?

Company: _____
Name/Dept.: _____
Place: _____
Phone: _____
E-mail: _____
Date: _____

Please enclose existing drawings, diagrams, comments and the like.

Page 2/3

Required load spectrum and expected service life [1)]

condition	output torque (Nm)	radial load (N)	output speed (1/min)	time slice (%)
1				
2				
3				
4				

Estimated service life _____ ∑ h

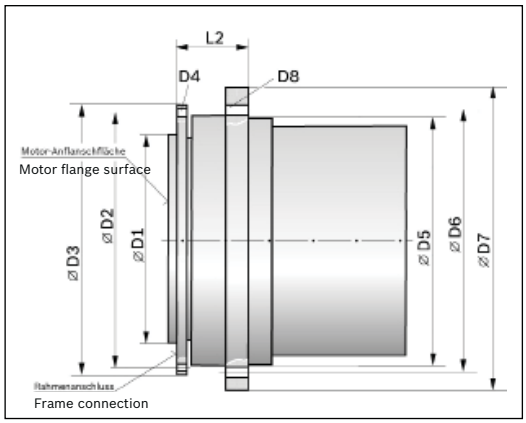

Dimensions of gearbox

- Standard dimensions see available "technical data sheet" of Rexroth
- With differing requirements/ dimensions, please complete table

D1		_____ mm
D2		_____ mm
D3		_____ mm
D4	No. of thread	____ Pcs. _____
D5		_____ mm
D6		_____ mm
D7		_____ mm
D8	No. of thread	____ Pcs. _____
L2		_____ mm

Tech. basic data of hydraulic motor

Hydraulic circuit	☐ open ☐ closed
Motor type code	_____
Displacement	$V_{g\,min}$ _____ cm^3
Displacement	$V_{g\,max}$ _____ cm^3
Flushing valve	☐ yes ☐ no
Speed sensor, if yes: type	☐ yes, type _____ ☐ no
Counter balance valve	☐ yes ☐ no
Pressure relief valve	☐ yes ☐ no
Pressure relief valve setting	_____ bar
Working pressure	Δp _____ bar
Input flow, max.	$q_{v\,max}$ _____ l/min

[1)] Optional entry

You wish to receive an offer for a HYDROTRAC GFT as a wheel drive?

Company: _____
Name/Dept.: _____
Place: _____
Phone: _____
E-mail: _____
Date: _____

Please enclose existing drawings, diagrams, comments and the like.

Page 3/3

Estimated Number of transmission units per year [1)] _____
Price range [1)] _____
Requested ship date RSD [1)] _____
Special application conditions _____
Further customer-specific requirements _____
Are there any legal requirements and/or standards to be considered?
☐ no ☐ yes if yes, please specify _____

Other (e.g. load spectra, application-relevant data, customer drawings, name plate):

[1)] Optional entry

You wish to receive an offer for a HYDROTRAC GFT as a chain drive?

Company: _____
Name/Dept.: _____
Place: _____
Phone: _____
E-mail: _____
Date: _____

Please enclose existing drawings, diagrams, comments and the like.

Page 1/3

Completing all fields is mandatory!
Exceptions see footnotes.

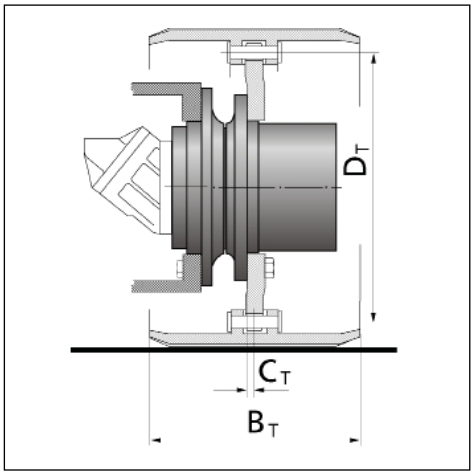

Type of machine _____

Machine weight	empty _____ loaded _____	t
Max. traction force of machine	F_Z _____	N
Gradeability [1]	s _____	%
Track type	☐ Rubber track ☐ Steel track	
Sprocket pitch diameter	D_T _____	mm
Track width [1]	B_T _____	mm
Radial load lever arm	C_T _____	mm
Max. travel speed	V_{max} _____	km/h
Working speed [1]	V _____	km/h
Ambient temperature	from/to _____	°C

Required load spectrum and expected service life [1]

status	output torque (Nm)	output speed (1/min)	time slice (%)
1			
2			
3			
4			

Estimated service life _____ ∑ h

Technical data gearbox

Selected gearbox type	GFT _____	
Max. output torque	$T_{2\,max}$ _____	kNm
Max. output speed	$n_{2\,max}$ _____	1/min
Gear ratio [1]	i _____	
Disconnect mechanisim	☐ no ☐ yes	
Multi-disk parking brake	☐ yes ☐ no	
Min. parking torque of multi-disc parking brake	_____	Nm
Release pressure, max.	P_{max} _____	bar
Release pressure, min. [1]	P_{min} _____	bar
Top coat specific	☐ no ☐ yes	
Color	RAL _____	

[1] Optional entry

RE 77110/02.2018 Bosch Rexroth AG

You wish to receive an offer for a HYDROTRAC GFT as a chain drive?

Company: _____
Name/Dept.: _____
Place: _____
Phone: _____
E-mail: _____
Date: _____

Page 2/3

Please enclose existing drawings, diagrams, comments and the like.

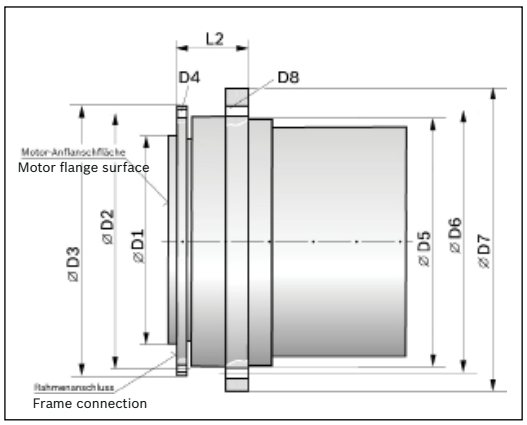

- Standard dimensions see available "technical data sheet" of Rexroth
- With differing requirements/ Dimensions, please complete table

D1		_____ mm
D2		_____ mm
D3		_____ mm
D4	No. of thread	____ Pcs. _____
D5		_____ mm
D6		_____ mm
D7		_____ mm
D8	No. of thread	____ Pcs. _____
L2		_____ mm

Tech. basic data of hydraulic motor

Hydraulic circuit	☐ open ☐ closed
Motor type code	_____
Displacement	$V_{g\,min}$ _____ cm^3
Displacement	$V_{g\,max}$ _____ cm^3
Flushing valve	☐ yes ☐ no
Speed sensor, if yes: type	☐ yes, type _____ ☐ no
Counter balance valve	☐ yes ☐ no
Pressure relief valve	☐ yes ☐ no
Pressure relief valve setting	_____ bar
Working pressure	Δp _____ bar
Input flow, max.	$q_{v\,max}$ _____ l/min

[1] Optional field

You wish to receive an offer for a HYDROTRAC GFT as a chain drive?

Please enclose existing drawings, diagrams, comments and the like.

Company: _____
Name/Dept.: _____
Place: _____
Phone: _____
E-mail: _____
Date: _____

Page 3/3

Estimated Number of transmission units per year [1)] _____
Price range [1)] _____
Requested ship date RSD [1)] _____
Special application conditions _____
Further customer-specific requirements _____
Are there any legal requirements and/or standards to be considered?
☐ no ☐ yes if yes, please specify _____

Other (e.g. load spectra, application-relevant data, customer drawings, name plate):

[1)] Optional entry

You wish to receive an offer for a HYDROTRAC GFT as a drum drive?

Company: _____
Name/Dept.: _____
Place: _____
Phone: _____
E-mail: _____
Date: _____

Page 1/3

Please enclose existing drawings, diagrams, comments and the like.

Completing all fields is mandatory!
Exceptions see footnotes.

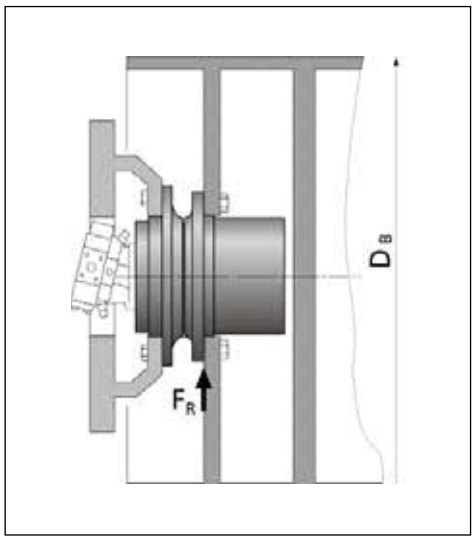

Type of machine ☐ Tandem roller ☐ Road roller ☐ Other _____

Machine weight		_____ t
Required total traction force		_____ N
Drive for		☐ Drum ☐ Rear wheels
Drum	Tamping plate:	☐ with ☐ without
Drum diameter	D_B	_____ mm
Rear wheel diameter	D_R	_____ mm
Reduction rear axle [1]	i	_____
Weight distribution		front _____ rear _____ t
Radial force drum	F_R	_____ N
Max. travel speed	V_{max}	_____ km/h
Output speed, drum	n_2	_____ 1/min
Gradeability	s	_____ %
Ambient temperature		from/to _____ °C

Required load spectrum and expected service life [1]

status	output torque (Nm)	output speed (1/min)	time slice (%)
1			
2			
3			
4			

Estimated service life _____ ∑ h

Technical data gearbox

Selected gearbox type	GFT	_____
Max. output torque	$T_{2\,max}$	_____ kNm
Max. output speed	$n_{2\,max}$	_____ 1/min
Reduction drum drive [1]	i	_____
Multi-disk parking brake		☐ yes ☐ no
Min. parking torque of multi-disc parking brake		_____ Nm
Release pressure, max.	P_{max}	_____ bar
Release pressure, min. [1]	P_{min}	_____ bar
Top coat specific		☐ no ☐ yes
Color	RAL	_____

* For wheel drive, please use "Customer specification wheel application" (pages 10–12).

[1] Optional entry

You wish to receive an offer for a HYDROTRAC GFT as a drum drive?

Company: _____
Name/Dept.: _____
Place: _____
Phone: _____
E-mail: _____
Date: _____

Please enclose existing drawings, diagrams, comments and the like.

Page 2/3

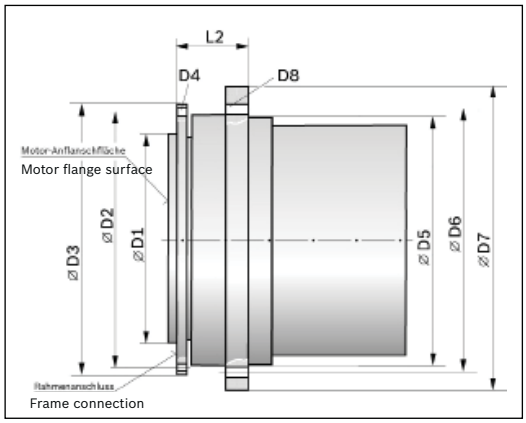

Dimensions of gearbox

- Standard dimensions see available "technical data sheet" of Rexroth
- With differing requirements/ Dimensions, please complete table

D1		_____ mm
D2		_____ mm
D3		_____ mm
D4	No. of thread	____ Pcs. _____
D5		_____ mm
D6		_____ mm
D7		_____ mm
D8	No. of thread	____ Pcs. _____
L2		_____ mm

Tech. basic data of hydraulic motor	**front:**	**rear:**
Hydraulic circuit	☐ open ☐ closed	☐ open ☐ closed
Motor type code	_____	_____
Displacement	$V_{g\,min}$ _____ cm^3	$V_{g\,min}$ _____ cm^3
Displacement	$V_{g\,max}$ _____ cm^3	$V_{g\,max}$ _____ cm^3
Flushing valve	☐ yes ☐ no	☐ yes ☐ no
Speed sensor	☐ yes ☐ no	☐ yes, ☐ no
If yes: type	type _____	type _____
Brake valve	☐ yes ☐ no	☐ yes ☐ no
Pressure relief valve	☐ yes ☐ no	☐ yes ☐ no
Pressure relief valve setting	_____ bar	_____ bar
Working pressure	Δp _____ bar	Δp _____ bar
Input flow, max.	$q_{v\,max}$ _____ l/min	$q_{v\,max}$ _____ l/min

[1] Optional field

You wish to receive an offer for a HYDROTRAC GFT as a drum drive?

Company: _____
Name/Dept.: _____
Place: _____
Phone: _____
E-mail: _____
Date: _____

Page 3/3

Please enclose existing drawings, diagrams, comments and the like.

Estimated Number of transmission units per year [1)] _____
Price range [1)] _____
Requested ship date RSD [1)] _____
Special application conditions _____
Further customer-specific requirements _____
Are there any legal requirements and/or standards to be considered?
☐ no ☐ yes if yes, please specify _____

Other (e.g. load spectra, application-relevant data, customer drawings, name plate):

[1)] Optional entry

Planetary gearboxes for mobile units

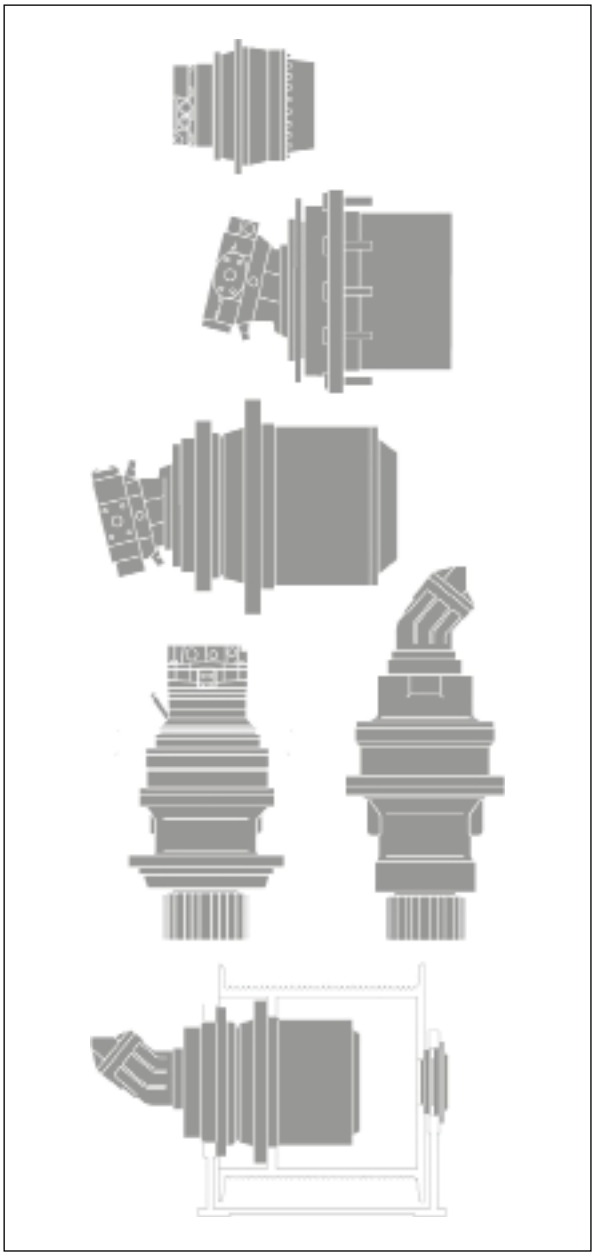

Hydrostatic travel drives

- HYDROTRAC GFT
  For fixed- or variable-displacement motors
  Output torques between 9,5 and 580 kNm
  Data sheet RE 77110
- HYDROTRAC GFT 2000
  Series 30
  Output torques between 13,5 and 42,5 kNm
  Data sheet RE 77116
- HYDROTRAC GFT 8000
  Series 30
  Output torques between 20 and 30 kNm
  Data sheet RE 77128
- HYDROTRAC GFT 8000
  Series 40
  Output torques between 10 and 130 kNm
  Data sheet RE 77117
- HYDROTRAC GFT 45 T2/T3
  Output torques max. 45 kNm
  Data sheet RE 77115

Hydrostatic swing drives

- MOBILEX GFB
  For fixed- or variable-displacement motors
  Output torques between 4 and 68,3 kNm
  Data sheet RE 77201
- MOBILEX GFB 2000
  Series 20
  Output torques between 4 and 14,5 kNm
  Data sheet RE 77206

Hydrostatic winch gears

- MOBILEX GFT-W
  For fixed- or variable-displacement motors
  Output torques between 14 and 325 kNm
  Data sheet RE 77502

Compact hydrostatic drive
HYDROTRAC GFT 45 T2/T3
with preliminary shiftable gear stage

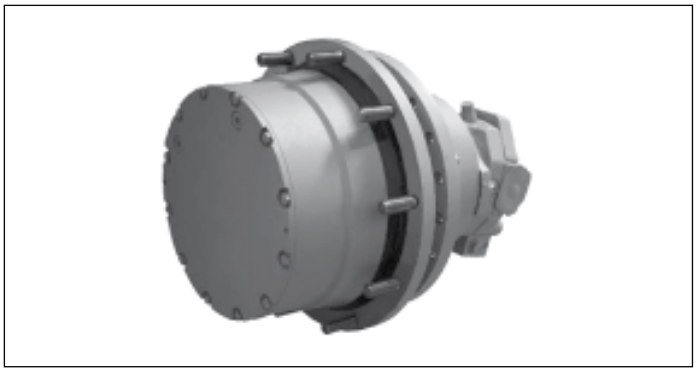

- Size GFT 45 T2/T3
- Output torque max. 45000 Nm

Features

- Defined increment step matching the hydraulic transmission range
- Gear shifting when moving
- Parking brake function
- Compact design

Content

Description, Brake / Clutch, Hydraulic Motors, Shipment, Weights, Oil Volume, Dimensions, Other Notes 2
Dimensions and Technical Data 3

Description

Two-speed travel drive HYDROTRAC GFT 45 T2/3 capable of shifting gears under load has been designed for vehicles which when performing normal work run at uniform low speed but are required to move significantly faster e.g. when traveling from one location to another.
This gear drive variant may for example be employed for blacktop paving equipment.
Gear shifting is effected by operating the two integrated clutches. As a result of the force-closed clutch design using friction plates gearshifting may also take place when the vehicle is moving.

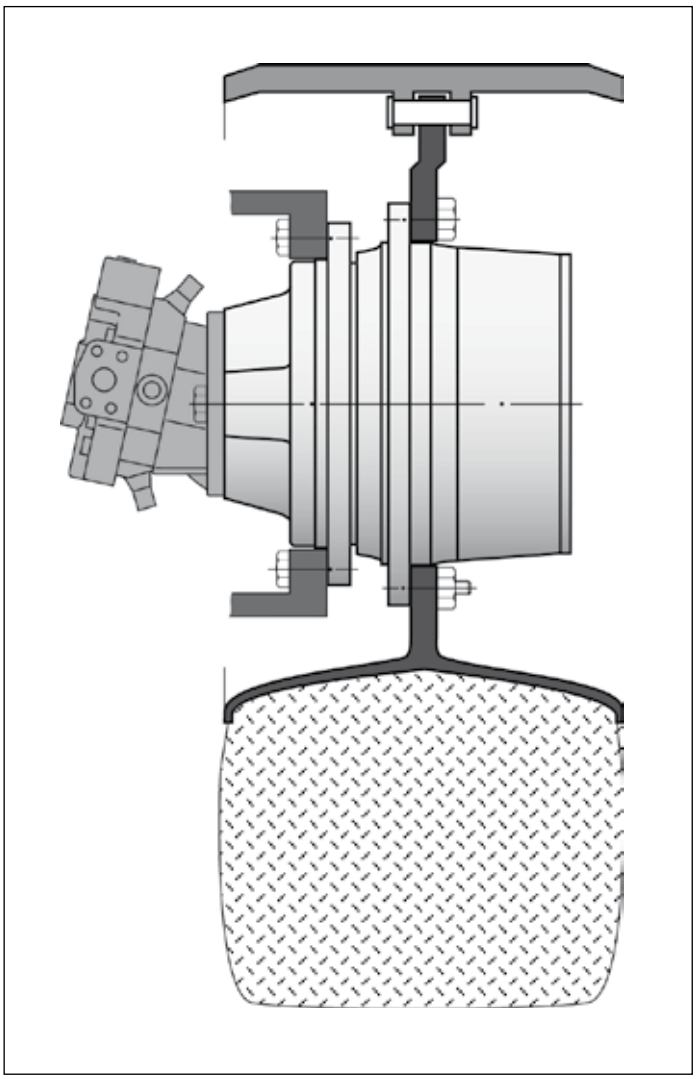

Brake / Clutch

When the vehicle is stationary the static locking torque is applied by engaging the two clutches. This causes the preliminary gear stage to be blocked. If inverted braking is permissible through engaging the disconnected clutch a service brake function can be achieved when using appropriately sized friction plates.

Hydraulic Motors

The gearbox has been designed for the direct attachment of a variable-displacement motor (preferably Rexroth hydraulic motors). This motor will be included in the supply on request.

Delivery / Shipment

Rexroth planetary gear units of type HYDROTRAC are shipped ready for mounting, but without oil filling. Standard supply includes external gearbox priming paint coat of color shade grey(similar to RAL 7032).
An internal preservation protects the unit against corrosion for a period of 12 months when stored in a dry place. Surfaces of external flanges, shaft ends and attachment faces are applied with preservative e.g. PERIGOL VCI 230 or CUSTOS 10-38.

Weights, Oil Volume, Dimensions

The weights indicated are to be understood as average values. However, the oil volume must always be ascertained via the oil level monitoring device. The figures and dimensions are not strictly obligatory. We reserve the right to implement technical modifications aimed at improving our products.

Other Notes

Statutory requirements provide that all rotating components must be provided with touch guards. All safety regulations prescribed for the relevant mounting locations must be observed.Commissioning and maintenance of the gear units to be in line with the instructions provided in our operating manual.

Please also observe our gearboxes series HYDROTRAC GFT 2000 (RE 77116) und HYDROTRAC GFT 8000 (RE 77117, RE 77128).

Dimensions

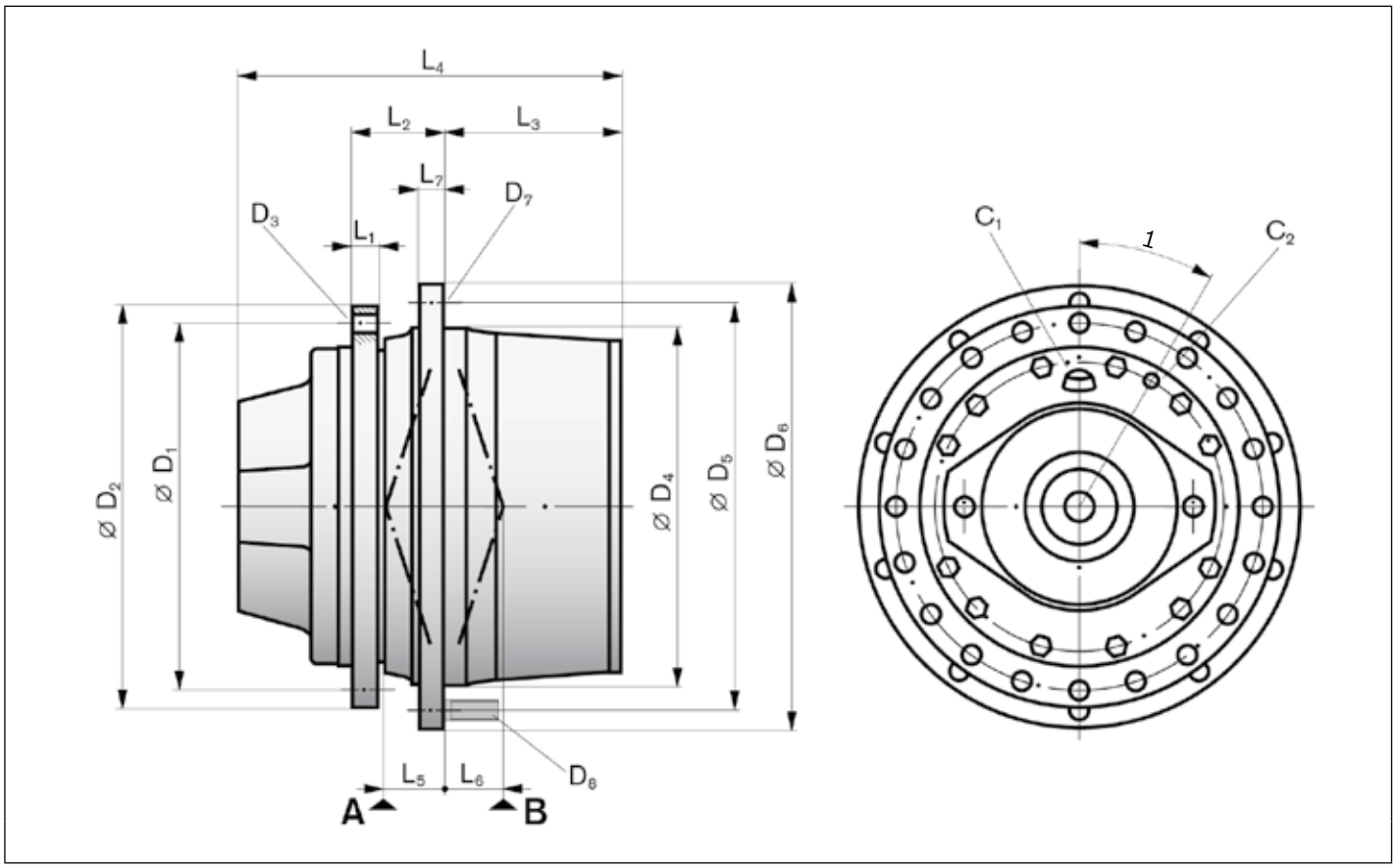

Technical Data

			1st Speed	2nd Speed
Transmission ratio	i		166,3	36,6
Input torque	$T_{1\ max}$	Nm	270	730
Input speed	$n_{1\ max}$	min^{-1}	3324	3000
Output torque	$T_{2\ max}$	Nm	45000	26700
Output speed	$n_{2\ max}$	min^{-1}	20	82
Max. locking torque of brake, static	T_{BR}	Nm	1600	730
Release pressure	p	bar	23	23
Max. release pressure	p_{max}	bar	30	30

Values indicated are maximum values.

Dimensions and masses

Type/design variant GFT	D1	D2	D3	D4	D5	D6	D7	D8	1	Mass
					mm					kg
GFT 45 T2/T3	360	395	M20x2,5	350	400	435	M20x1,5		30°	195

Type/design variant GFT	L1	L2	L3	L4	L5	L6	L7	A + B		C_1	C_2
								C	C_O		
								kN			
GFT 45 T2/T3	25	89	174,5	376	59,1	53,6	23	170	405	M12x1,5	

Planetary gearboxes for mobile units

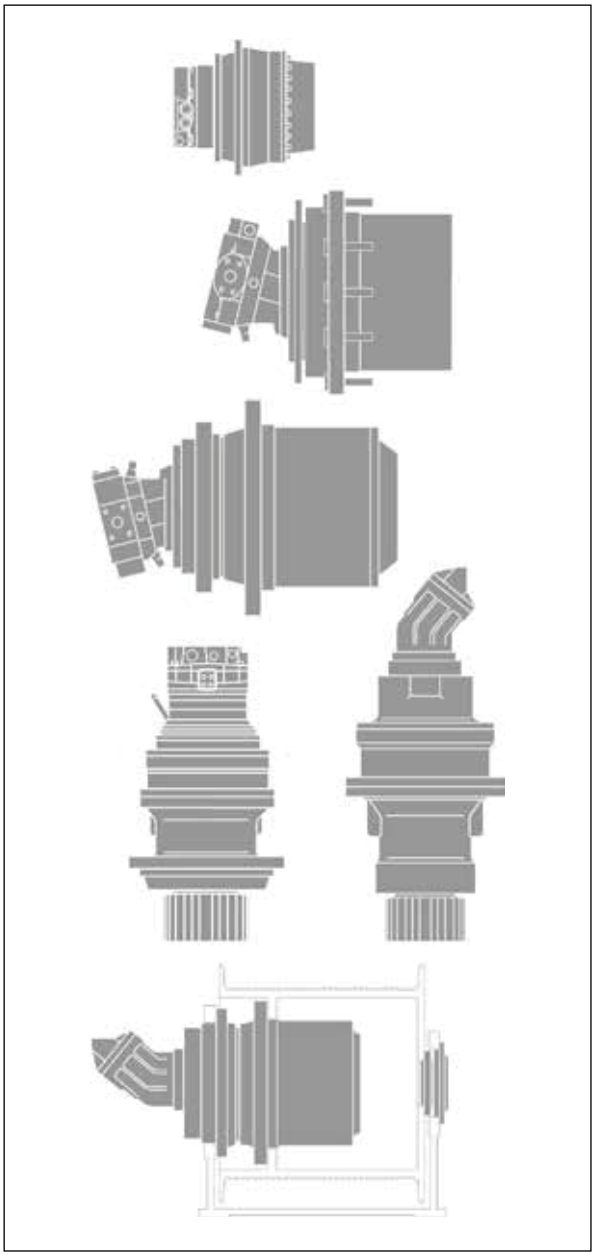

Hydrostatic travel drives

- HYDROTRAC GFT
  For fixed- or variable-displacement motors
  Output torques between 9,5 and 580 kNm
  Data sheet RE 77110
- HYDROTRAC GFT 2000
  Series 30
  Output torques between 13,5 and 42,5 kNm
  Data sheet RE 77116
- HYDROTRAC GFT 8000
  Series 30
  Output torques between 20 and 30 kNm
  Data sheet RE 77128
- HYDROTRAC GFT 8000
  Series 40
  Output torques between 10 and 130 kNm
  Data sheet RE 77117
- HYDROTRAC GFT 45 T2/T3
  Output torques max. 45 kNm
  Data sheet RE 77115

Hydrostatic swing drives

- MOBILEX GFB
  For fixed- or variable-displacement motors
  Output torques between 4 and 68,3 kNm
  Data sheet RE 77201
- MOBILEX GFB 2000
  Series 20
  Output torques between 4 and 14,5 kNm
  Data sheet RE 77206

Hydrostatic winch gears

- MOBILEX GFT-W
  For fixed- or variable-displacement motors
  Output torques between 14 and 325 kNm
  Data sheet RE 77502

Rexroth
Bosch Group

HYDROTRAC GFT

Drive unit for crawler track equipment

Series 2000

Data sheet

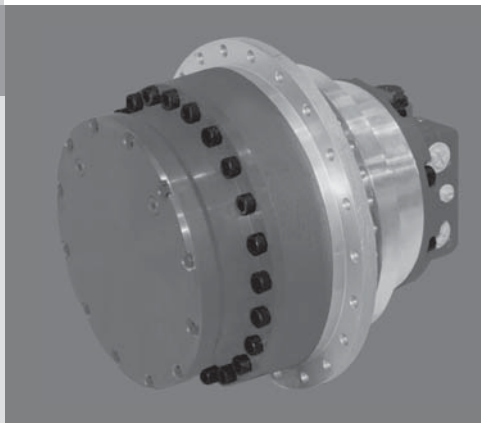

Contents

	Page
Dimensions	
Technical data	2

Description

The hydrostatic drive unit of the GFT 2000 series consists of a two-stage planetary gearbox with an integrated hydraulic swash plate axial-piston motor. The complete unit is designed as a drive for tracked vehicles. The integrated dual displacement motor is provided with an automatic shifting function for automatic selection between $V_{g\ min}$ and $V_{g\ max}$. Optionally, the integrated dual displacement motor is provided with an HZ-adjustment.

- Compact, space-saving two-stage drive unit
- Suitable for crawler track equipment
- Open circuit
- Automatic shifting function
- Integrated Multiple disk brake
- Mechanical disconnect mechanism (optional)
- Connection plate with integrated brake valve and pressure relief valve
- Easy installation as a complete unit

Technical data • Dimensions

GFT type	Max. output torque	Motor displacement	Max. pressure	Gear ratio	Braking torque, static	Weight approx.	Tonnage class
	Nm	cm^3	bar	i	Nm	kg	to
GFT 2120 E	13,500	54	300	53	129	85	7 - 10
GFT 2140 E	26,500	90	350	53	250	155	10 - 15
GFT 2160 E	42,500	170	350	45	475	250	20 - 25
GFT 2180 E			in preparation				30 - 35

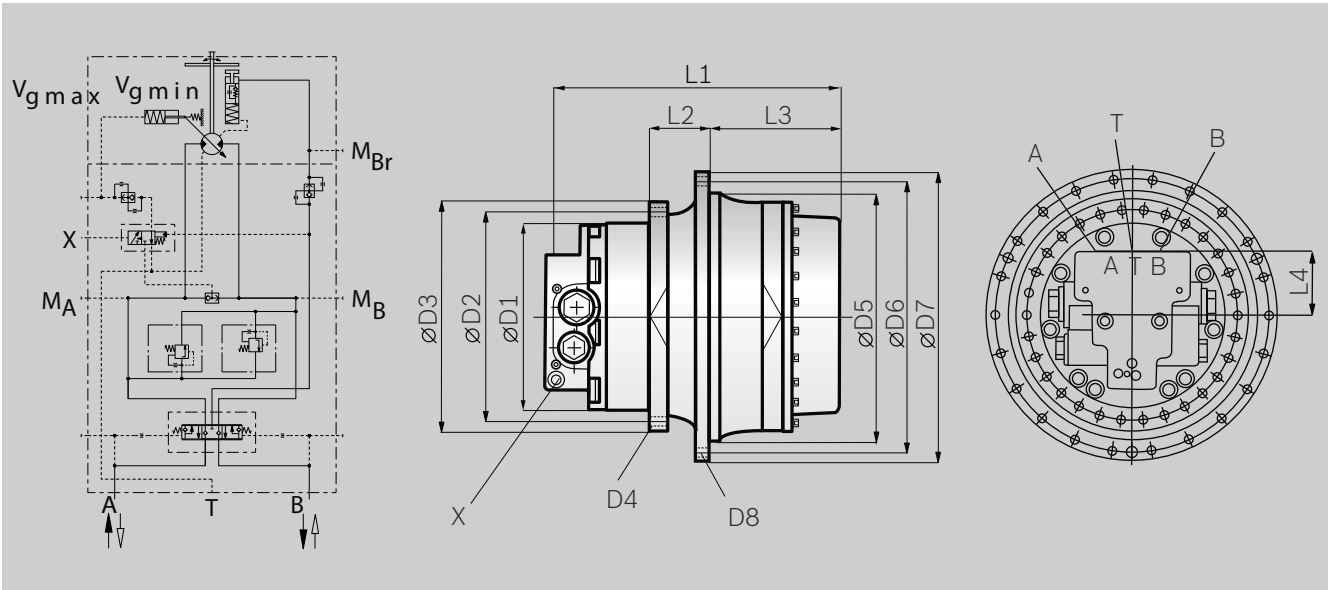

GFT type	D1	D2	D3	D4	D5	D6	D7	D8	L1	L2	L3	L4	A/B*	T*	X*
									mm						
GFT 2120 E	210	250	280	12x M16	265	300	326	12x M14	368.5	80	154.5	76.5	M27x2	M14x1.5	M14x1.5
GFT 2140 E	246	280	308	20x M16	324	364	394	18x M16	410	99.5	176.5	82	M33x2	M16x1.5	M14x1.5
GFT 2160 E	300	340	372	30x M16	402	440	470	22x M16	477.5	98.5	196.5	98	M33x2	M18x1.5	M14x1.5
GFT 2180 E								in preparation							

*JIS connections optional

Planetary gearboxes for mobile applications
HYDROTRAC GFT 8000
Series 40

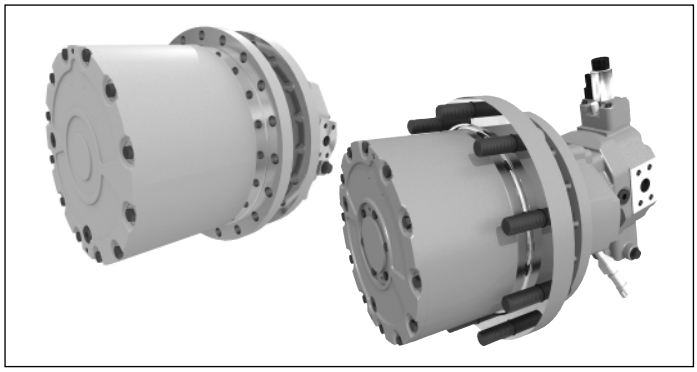

- Sizes 8110 to 8190
- Output torques between 10000 and 130000 Nm

Features

- Compact, space-saving two- or three-stage planetary gearbox
- Robust design
- Integrated static multiple-disk parking brake
- Several sizes also with dynamic brake
- Assembly of variable plug-in and fixed displacement plug-in motors different series possible
- For open and closed circuits
- Easy assembly
- Disconnect mechanism (optional)
- Wheel studs (optional)

Content

Description	2
Technical data	2
Application conditions	2
Dimensions	3
Planetary gearboxes for mobile units	4

Description

The hydrostatic compact drive series 40 consists of a two- or three-stage planetary gearbox, which - in combination with a hydraulic axial piston motor - builts a space-saving drive unit. The complete unit is used as a drive component for wheel- or chain driven vehicles and other mobile applications.

Application conditions

The planetary gearboxes are designed for use in environmental temperatures between -25°C and +40°C. Environmental factors such as salt water, salt air, sand, dust, pressure, severe shocks, extreme shock loads and environmental temperatures, aggressive media, etc. affect the function. Such influences must be pre-announced in order for a secure gearbox design.

Technical data

Size GFT	**Nominal output torque** Nm	**Ratio** *i*	**Brake torque static** Nm	**Brake torque dynamic** Nm	**Appr. weight without motor** kg	**Compatible hydraulic motors**
8110 E	10000	25.2 • 39.2 • 47.1 • 54.7	2)	-	55	A2FE 28 • 32 / A10FE 28 • 45 4) / A6VE 28 / A10VE 28 • 45 4)
8120 E 1)	15000	19.0 • 24.0 • 32.1 • 36.4 • 39.1	2)	3)	80	A2FE 45 • 56 • 63 4) / A6VE 55 • 60
8130 E 1)	20000	26.0 • 32.3 • 39.2 • 50.6	2)	3)	85	A2FE 45 • 56 • 63 • 80 • 90 / A6VE 55 • 60 • 80 • 85
8140 F	30000	90.4 • 102.8 • 120.4 • 137.1	2)	-	95	A2FE 45 • 56 • 63 4) / A6VE 55 • 60
8150 E 1)	42000	32.3 • 35.4 • 41.1 • 50.6	2)	3)	200	A2FE 80 • 90 / A6VE 80 • 85 • 107 • 115 • 160 • 170
8160 F	52000	73.8 • 100.5 • 116.1 • 138.9	2)	-	240	A2FE 80 • 90 • 107 • 125 / A6VE 80 • 85 • 107 • 115
8170 F	70000	95.0 • 107.3 • 124.1	2)	-	250	A2FE 107 • 125 / A6VE 107 • 115
8180 E	70000	44.1 • 50.6 • 54.7	2)	-	330	A6VE 160 • 170
8190 F	130000	93.8 • 121.1 • 140.1 • 167.9	2)	-	460	A2FE 107 • 125 • 160 • 180 / A6VE 107 • 115 • 160 • 170

Other design variants on request

1) Size also available with dynamic brake (not technical combinable with all in the size listed hydraulic motors)
2) Depending on motor size
3) Device-specific
4) [ ] On request

Dimensions

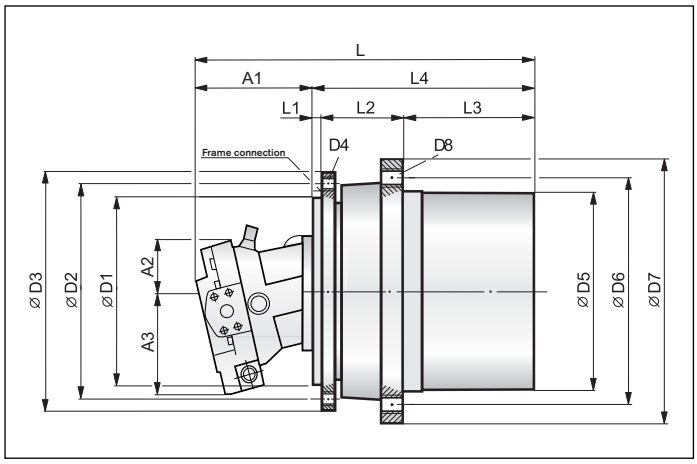

Version T (with thread hole)

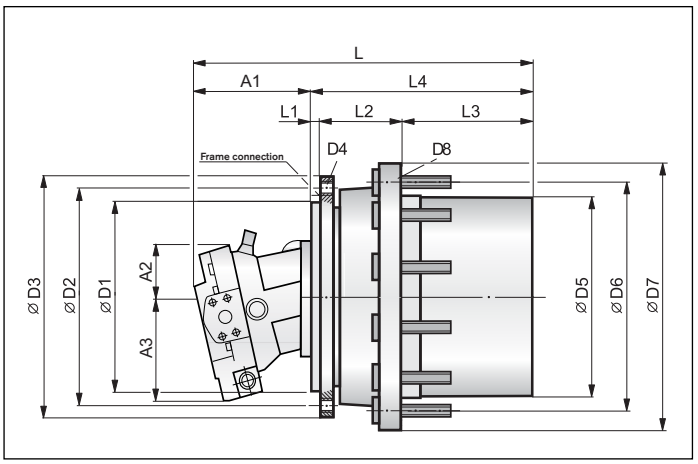

Version W (with wheel stud)

Size GFT	Version	D1	D2	D3	D4	D5	D6	D7	D8	L	L1	L2	L3	L4	A1	A2	A3
8110 E	T	210	244	268	12 x M14	230	260	284	16 x M16	1)	15	60	166	241	2)	2)	2)
8110 E	W							in preparation									
8120 E	T	240	275	300	18 x M16	270	305	335	16 x M16	1)	14	75	163.5	252.5	2)	2)	2)
8120 E	W	250	305	330	23 x M16	260	300	335	10 x M22 x 1.5	1)	14	82	156.5	252.5	2)	2)	2)
8120 E	W	270	300	325	17 x M16	280	335	372	10 x M22 x 1.5	1)	14	90	148.5	252.5	2)	2)	2)
8130 E	T	250	290	320	16 x M20	280	305	330	16 x M16	1)	14	82	166	262	2)	2)	2)
8130 E	W	270	300	325	17 x M16	280	335	372	10 x M22 x 1.5	1)	14	90	158	262	2)	2)	2)
8140 F	T	240	285	320	20 x M20	280	305	330	20 x M16	1)	14	82	195.5	291.5	2)	2)	2)
8150 E	T	330	370	410	20 x M20	360	400	440	16 x M20	1)	12	90	252.5	354.5	2)	2)	2)
8150 E	W	330	370	410	19 x M20	365	415	455	12 x M22 x 1.5	1)	12	90	252.5	354.5	2)	2)	2)
8160 F	T	330	370	410	20 x M20	360	400	440	16 x M20	1)	14	114	254	382	2)	2)	2)
8170 F	T	330	370	410	20 x M20 x 1.5	400	450	490	20 x M20 x 1.5	1)	14	90	284	388	2)	2)	2)
8180 E	T	380	430	480	20 x M24	430	480	520	24 x M24	1)	14.5	148	229.5	392	2)	2)	2)
8190 F	T	420	460	500	24 x M24	460	500	540	36 x M18 x 1.5	1)	21.5	165	294	480.5	2)	2)	2)

The values given under „Dimensions“ conform to the standard connecting dimensions. By various motor/gearbox-combinations additional check of the measurements from the motor flange and the gearbox connecting dimensions.

Other dimensions on request

1) Depending on motor size
2) Depending on motor size and control device

Planetary gearboxes for mobile units

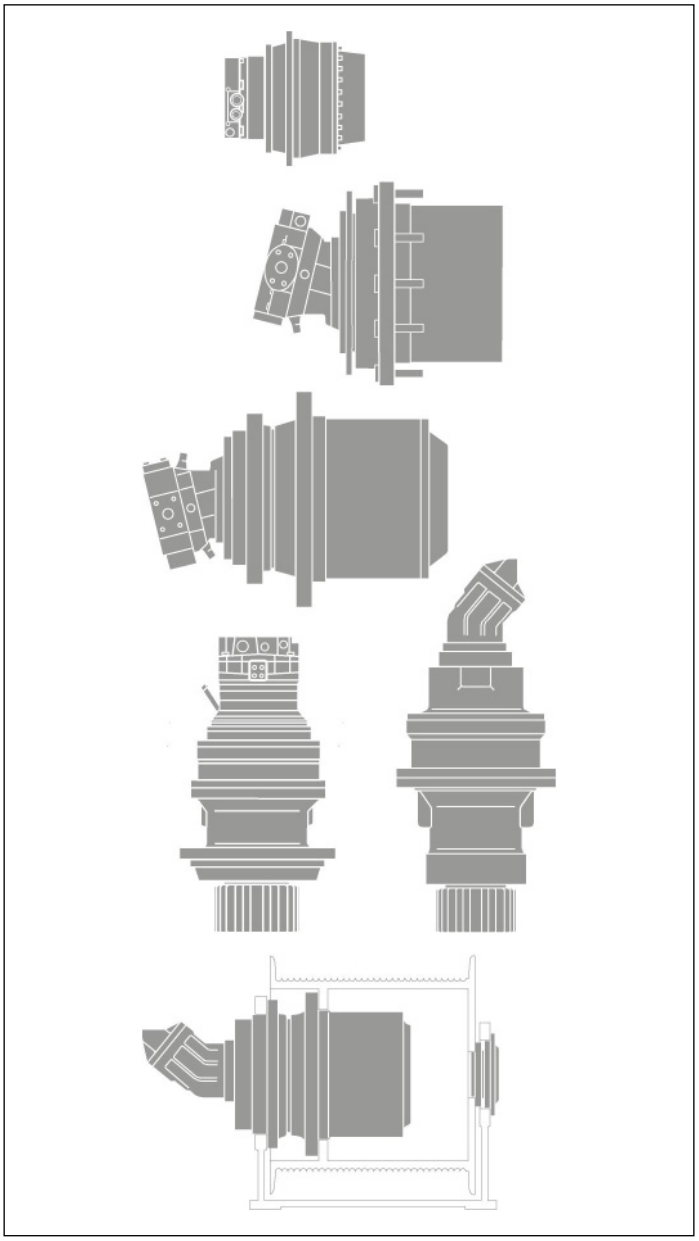

Hydrostatic travel drives

- HYDROTRAC GFT
  For fixed- or variable-displacement motors
  Output torques between 9,5 and 580 kNm
  Data sheet RE 77110
- HYDROTRAC GFT 2000
  Series 30
  Output torques between 13,5 and 42,5 kNm
  Data sheet RE 77116
- HYDROTRAC GFT 8000
  Series 30
  Output torques between 20 and 30 kNm
  Data sheet RE 77128
- HYDROTRAC GFT 8000
  Series 40
  Output torques between 10 and 130 kNm
  Data sheet RE 77117
- HYDROTRAC GFT 45 T2/T3
  Output torques max. 45 kNm
  Data sheet RE 77115

Hydrostatic swing drives

- MOBILEX GFB
  For fixed- or variable-displacement motors
  Output torques between 4 and 68,3 kNm
  Data sheet RE 77201
- MOBILEX GFB 2000
  Series 20
  Output torques between 4 and 14,5 kNm
  Data sheet RE 77206

Hydrostatic winch gears

- MOBILEX GFT-W
  For fixed- or variable-displacement motors
  Output torques between 14 and 325 kNm
  Data sheet RE 77502

Planetary gearboxes for mobile applications
HYDROTRAC GFT 8130 / 8140
Series 30

- Sizes 8130 and 8140
- Output torques between 20000 and 30000 Nm

Features

- Compact, space-saving two- or three-stage planetary gearbox
- Robust design
- Integrated static multiple-disk parking brake
- Assembly of variable plug-in and fixed displacement plug-in motors different series possible
- For open and closed circuits
- Easy assembly
- Disconnect mechanism (optional)
- Wheel studs (optional)

Content

Description	2
Technical data	2
Application conditions	2
Dimensions	3
Planetary gearboxes for mobile units	4

Description

The hydrostatic compact drive series 40 consists of a two- or three-stage planetary gearbox, which - in combination with a hydraulic axial piston motor - builts a space-saving drive unit. The complete unit is used as a drive component for wheel- or chain driven vehicles and other mobile applications.

Application conditions

The planetary gearboxes are designed for use in environmental temperatures between -25°C and +40°C. Environmental factors such as salt water, salt air, sand, dust, pressure, severe shocks, extreme shock loads and environmental temperatures, aggressive media, etc. affect the function. Such influences must be pre-announced in order for a secure gearbox design.

Technical data

Size GFT	Nominal output torque Nm	Ratio i	Brake torque static Nm	Appr. weight without motor kg	Compatible hydraulic motors
8130 E	20000	38.9 • 51.4	[1]	83	A2FE 45 • 56 • 63 / A6VE 55 • 60
8140 F	30000	102.8 • 137.1	[1]	95	A2FE 45 • 56 • 63 / A6VE 55 • 60

1) Device-specific

Dimensions

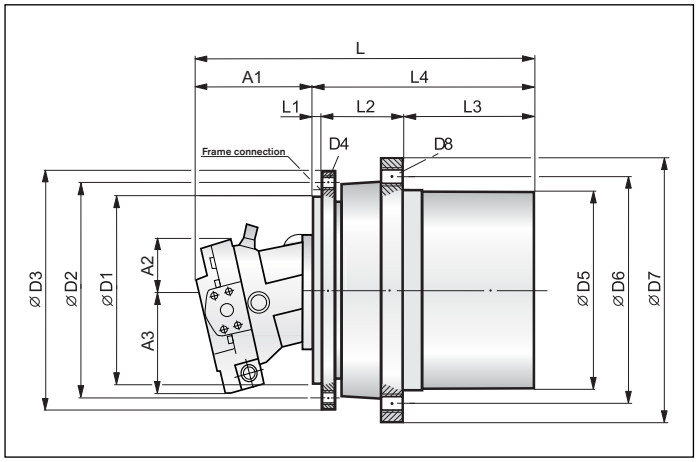

Version T (with thread hole)

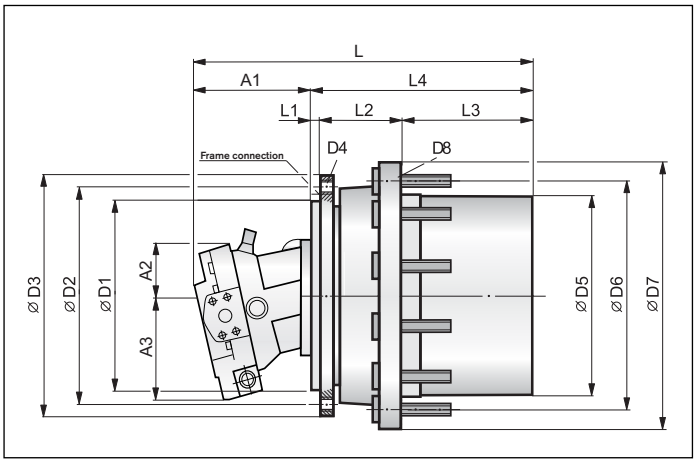

Version W (with wheel stud)

Size GFT	Version	D1	D2	D3	D4	D5	D6	D7	D8	L	L1	L2	L3	L4	A1	A2	A3
8130 E	T	250	290	320	16 x M20	280	305	330	16 x M16	2)	14	82	166	262	3)	3)	3)
8130 E	W	250	305	330	23 x M16	260	300	335	10 x M22 x 1.5	2)	14	82	166	262	3)	3)	3)
8140 F	T	240	285	320	20 x M20	280	305	330	18 x M16	2)	14	82	195.5	291.5	3)	3)	3)
8140 F	T	240	285	320	20 x M20	280	305	330	30 x M16	2)	14	82	195.5	291.5	3)	3)	3)

2) Depending on motor size
3) Depending on motor size and control device

Planetary gearboxes for mobile units

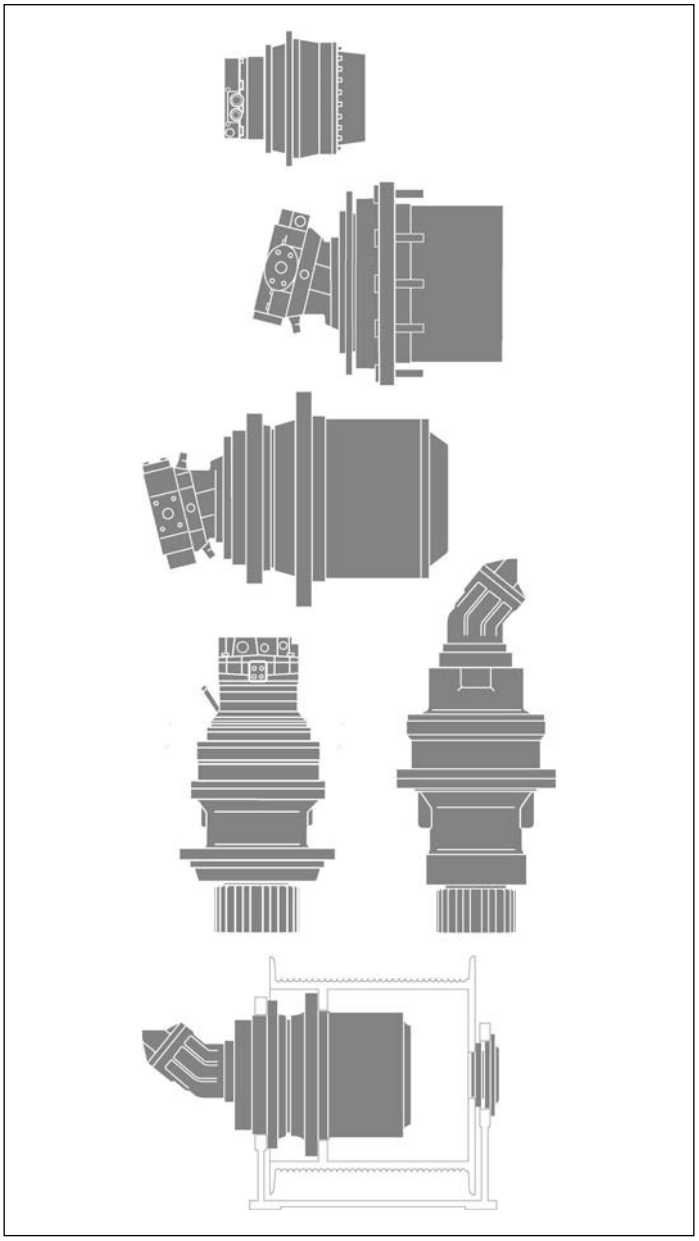

Hydrostatic travel drives

- HYDROTRAC GFT
  For fixed- or variable-displacement motors
  Output torques between 9,5 and 580 kNm
  Data sheet RE 77110
- HYDROTRAC GFT 2000
  Series 30
  Output torques between 13,5 and 42,5 kNm
  Data sheet RE 77116
- HYDROTRAC GFT 8000
  Series 30
  Output torques between 20 and 30 kNm
  Data sheet RE 77128
- HYDROTRAC GFT 8000
  Series 40
  Output torques between 10 and 130 kNm
  Data sheet RE 77117
- HYDROTRAC GFT 45 T2/T3
  Output torques max. 45 kNm
  Data sheet RE 77115

Hydrostatic swing drives

- MOBILEX GFB
  For fixed- or variable-displacement motors
  Output torques between 4 and 68,3 kNm
  Data sheet RE 77201
- MOBILEX GFB 2000
  Series 20
  Output torques between 4 and 14,5 kNm
  Data sheet RE 77206

Hydrostatic winch gears

- MOBILEX GFT-W
  For fixed- or variable-displacement motors
  Output torques between 14 and 325 kNm
  Data sheet RE 77502

Swing Drives
MOBILEX GFB
for mobile applications

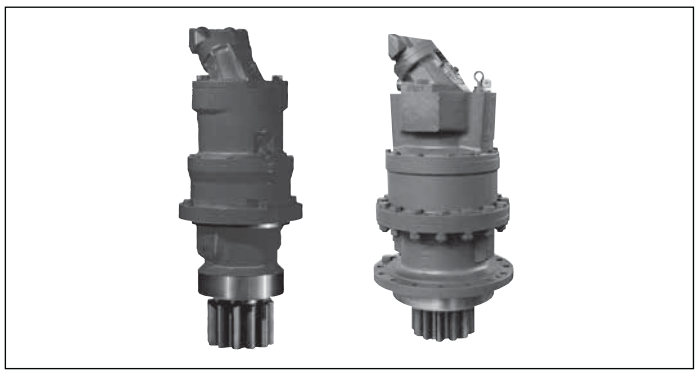

- Type GFB 9 to GFB 84
- Output torques between 4,000 and 68,300 Nm

Characteristics

- Compact, space-saving two or three-stage planetary design
- Easy mounting
- Convenient oil change
- Integrated multiplate parking device
- Low-noise operation
- High efficiency
- Long service life

Contents

Description, Lubrication, Brake, Hydraulic Motor	2
Type of Construction, Overview of Swing Drives	3
Application Conditions, Gearbox Design, Higher Torques, Gearbox Selection, Multiplate Parking Device, Driver Groups and Service Time Categories	4
Classifications Examples	5
Dimensions and Technical Data for Output Torques from: 4000 Nm to 17500 Nm for excavators 7000 Nm to 28500 Nm for cranes	6
22000 Nm to 38200 Nm for excavators 38000 Nm to 68300 Nm for cranes	8
Customer Specification swing drives	10

Description

Rexroth MOBILEX GFB planetary gearboxes are hydrostatic swing gears.
They are suitable for use in excavators and cranes of all types, in ship unloading equipment, forestry equipment and in all applications where accurate positioning is called for.
The drive consists of a two- or three-stage gearbox with an integrated multi-disk parking brake, an output pinion as well as a hydraulic motor, preferably from Rexroth.
The information provided in this bulletin serves to help you select the planetary gearbox best suited for your application. In addition, our field personnel are available to you to provide advisory services even at the project stage.

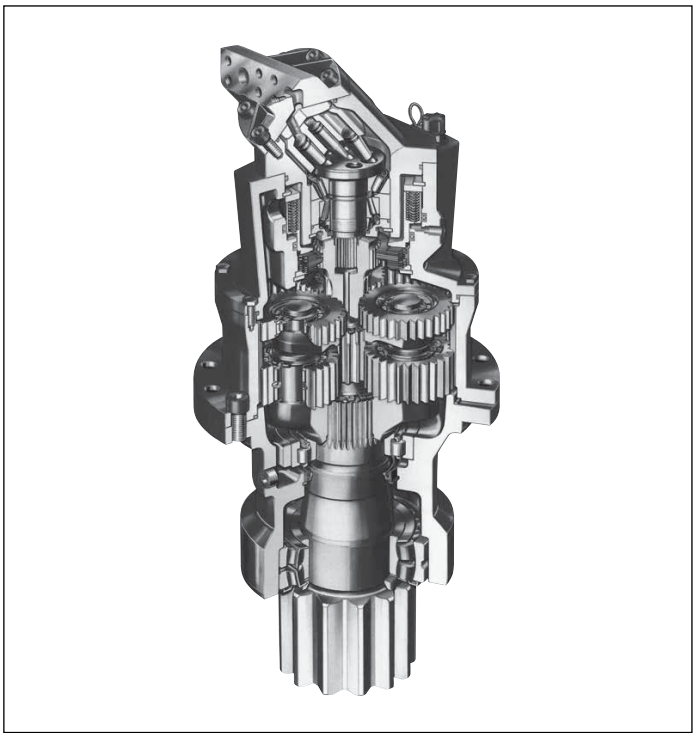

Rexroth MOBILEX GFB two-stage hydrostatic compact drive with a multiplate parking device and a Rexroth plug-in motor

Lubrication

The gearteeth and bearings are splash lubricated. Aside from periodic oil changes, the drive units are maintenance-free. Oil changes are easy to do. The oil brands recommended in the operating manual shall be exclusively used.
The change intervals for the relevant application conditions are also given in the operating manual. The pinion-side antifriction bearing of the output shaft is grease-lubricated for life.

Hydraulic Motors

The gearbox is designed for direct flange attachment of a variable or fixed displacement motor (preferably a Rexroth hydraulic motor).

Multiplate Parking Device

The standard supply scope includes a spring-loaded, hydraulically released multiplate parking device arranged on the input side.
The multiplate parking device is not a service brake.

Gearbox Supply

Rexroth MOBILEX planetary gearboxes are delivered ready for installation, but without oil filling. The standard gearbox version comes with a priming coat of gray color (similar to RAL 7032) and is internally protected with a temporary corrosion preventive that preserves the gearbox for 12 months, if stored in a dry location.
Exterenal flanges, shaft extensions and mating faces are protected with e.g. PERIGOL VCI 230 or CUSTOS 10-38

Mass, Oil Volumes, Dimensions

The specified mass are average figures.
As far as oil volumes are concerned, gearbox operators should rely on oil level readings rather than specified oil volumes. Figures and dimensions are not strictly binding. We reserve the right to make changes in line with technical progress.

Further Notes

As prescribed by stationary provisions, all rotating parts must be protected by guards against accidental contact. Local safety regulations must be compiled with. Commissioning and maintenance of the gearboxes must be performed in line with the instructions given in our operating manual.

Please also note our gearbox series
MOBILEX GFB 2000 (RE 77206).

Type of Construction

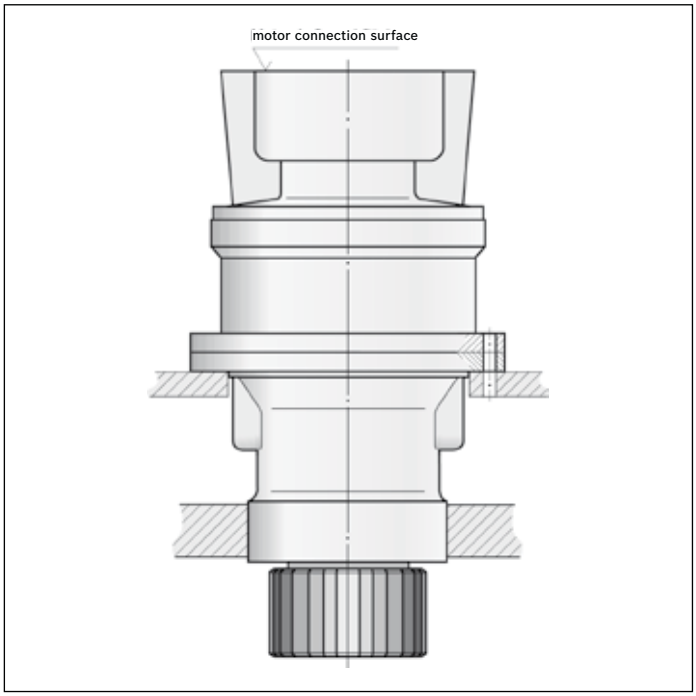

GFB T2/T3 1000
Version **1000** = 2 centering seats
T2 = 2-stage, **T3** = 3-stage

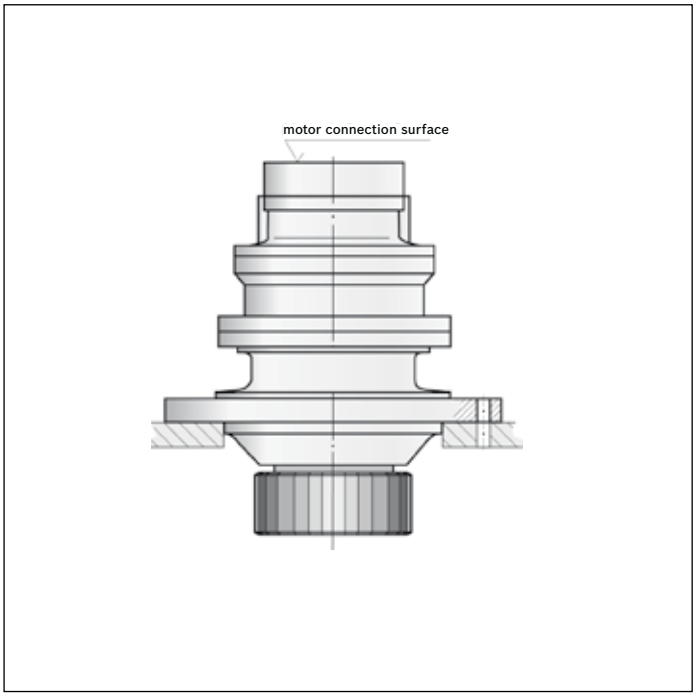

GFB T2/T3 2000
Version **2000** = 1 centering seat
T2 = 2-stage, **T3** = 3-stage

Ordering Code

MOBILEX GFB 26 T2 1000

Swing Drive GFB

Version
(Version = Output Torque T_2 [kNm]

Number of Centering Seats

Number of Gear Stages

Swing Drives MOBILEX GFB - Overview

Type/Version GFB	Output Torque Excavator $T_{2\,max}$ Nm	Output Torque Crane $T_{2\,max}$ Nm	Gear Ratio from/to i
GFB 9 T2	4,000	7,000	33.4
GFB 17 T2	7,700	12,700	32.5 - 45.7
GFB 24 T2	10,600	17,500	149.1
GFB 26 T3	10,000	16,500	43.9 - 51.5
GFB 36 T3	17,500	28,500	117.6 - 153.6
GFB 50 T2	22,000	38,000	32.3
GFB 50 T2	22,000	38,000	147.4
GFB 80 T3	38,200	68,300	186.4
GFB 84 T2	38,200	68,300	35.1

Application Conditions

The gearboxes are designed for use at ambient temperatures of between -20°C and +40°C. Environmental influences such as salt water, salty air, sand, dust, compressure, heavy vibrations, extreme shocks and ambient temperatures, aggressive fluids and the like may affect the function so that the gearbox can be designed for safe operation.

Gearbox Design

The gearbox design is based on many years of practical application experience. The maximum output torques $T_{2\ max}$ indicated under technical data for crane applications relate to FEM Section I, 3rd Edition and Section IX (FEM - Fédération Européene de la Manutention), as well as DIN 15020, collective load class L2, service and time category T5 corresponding to driver group M5. The reference output speed is 25 revolutions per minute maximum. If the swing drive is to be classified in another driver group, the required output torque must be converted using the K factor (see table). This conversion gives you the maximum admissible output torque for the new driver group selected. Wether or not the chosen overall classification can be met will be determined by the Rexroth gear technology experts

.

Higher Torques

For gearboxes transmitting higher torques than those indicated in this product catalog, please contact us.

Gearbox Selection

- T_2 = Output torque
- T_{2K} = Corrected output torque
  K factor according to device time category and collective group given in the table.
  $$T_{2K} = T_2 \bullet K$$
- T_{2K} of the gearbox to be selected must be ≤ $T_{2\ max}$ (according to this product catalog).

Multiplate Parking Device

$$T_{Br\ sta.\ min} = 1{,}3 \bullet T_2 \text{ (input torque)}$$

The holding torque multiplies with the selected transmission ratio.

See also Gearbox Design.

The customer specification for swing drives is reproduced on pages 10 to 12.

Driver Groups and Service Time Categories FEM, Section I, 3rd Edition 1987 (FEM: Fédération Européene de la Manutention)

Service time category				T2	T3	T4	T5	T6	T7	T8
Assumed average service time per day in hours				0.25 - 0.5	0.5 - 1	1 - 2	2 - 4	4 - 8	8 - 16	> 16
Theoretic ervice life in hours				400 - 800	800 - 1800	1600 - 3200	3200 - 6300	6300 - 12500	12500 - 25000	25000 - 50000
Collective load class				**Driver group with K factor**						
Collective groups	L1	low	Maximum loads occur only in exceptional cases; low loads are present at all times	M 1 0.90	M 2 0.90	M 3 0.90	M 4 0.90	M 5 0.95	M 6 1.05	M 7 1.2
	L2	medium	Low, medium and high loads are present for roughly equal periods of time	M 2 0.90	M 3 0.95	M 4 0.95	M 5 1	M 6 1.15	M 7 1.30	M 8 1.50
	L3	high	Loads are always near the maximum	M 3 1.05	M 4 1.05	M 5 1.10	M 6 1.25	M 7 1.40	M 8 1.60	M 8 1.80
	L4	very high	Always maximum loads	M 4 1.25	M 5 1.30	M 6 1.45	M 7 1.65	M 8 1.85	M 8 2.10	M 8 2.40

Classifications Examples (see FEM Section I, 3. Edition, Table T.2.1.3.5.)

Type of Crane (Designation)	**Details on type of use** [1)]	Type of Driver				
		Hoisting	Swinging	Level Luffing	Trolley Travelling	Crane Travelling
Erection cranes		M 2 - M 3	M 2 - M 3	M 1 - M 2	M 1 - M 2	M 2 - M 3
Loading bridges	hook	M 5 - M 6	M 4	-	M 4 - M 5	M 5 - M 6
Loading bridges	grab or magnet	M 7 - M 8	M 6	-	M 6 - M 7	M 7 - M 8
Workshop cranes		M 6	M 4	-	M 4	M 5
Overhead travelling cranes, ram cranes, scrap yard cranes	grab or magnet	M 8	M 6	-	M 6 - M 7	M 7 - M 8
Unloading bridges, container gantry cranes	hook or spreader	M 6 - M 7	M 5 - M 6	M 3 - M 4	M 6 - M 7	M 4 - M 5
Other gantry cranes (with trolley and/or live ring)	hook	M 4 - M 5	M 4 - M 5	-	M 4 - M 5	M 4 - M 5
Unloading bridges, container gantry cranes (with trolley and/or live ring)	grab or magnet	M 8	M 5 - M 6	M 3 - M 4	M 7 - M 8	M 4 - M 5
Berth cranes, shipyard cranes, dismantling cranes	hook	M 5 - M 6	M 4 - M 5	M 4 - M 5	M 4 - M 5	M 5 - M 6
Dockside cranes (slewable, gantry type, ...) floating cranes, floating shearlegs	hook	M 6 - M 7	M 5 - M 6	M 5 - M 6	-	M 3 - M 4
Dockside cranes (slewable, gantry type, ...) floating cranes, floating shearlegs	grab or magnet	M 7 - M 8	M 6 - M 7	M 6 - M 7	-	M 4 - M 5
Floating cranes and floating shearlegs for very high loads (normally above 100 tons)		M 3 - M 4	M 3 - M 4	M 3 - M 4	-	-
Shipboard cranes	hook	M 4	M 3 - M 4	M 3 - M 4	M 2	M 3
Shipboard cranes	grab or magnet	M 5 - M 6	M 3 - M 4	M 3 - M 4	M 4 - M 5	M 3 - M 4
Tower cranes for construction sites		M 4	M 5	M 4	M 3	M 3
Derrick tower gantries		M 2 - M 3	M 1 - M 2	M 1 - M 2	-	-
Railroad cranes, approved for service on trains		M 3 - M 4	M 2 - M 3	M 2 - M 3	-	-
Vehicle-mounted cranes	hook	M 3 - M 4	M 2 - M 3	M 2 - M 3	-	-

1) In this rubric only a few typical types of use are indicated

Dimensions

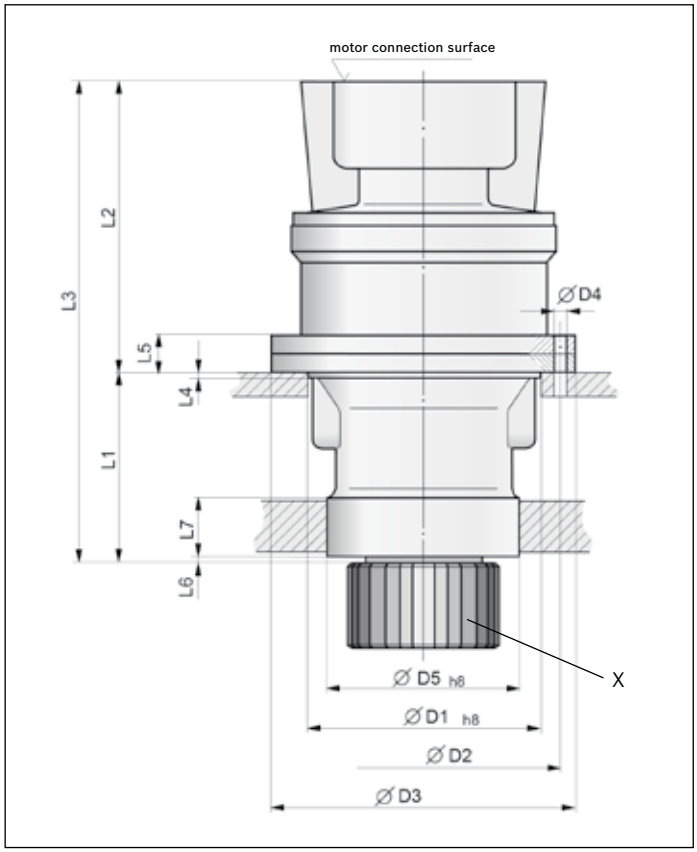

GFB T2/T3 1000 • X = The gearing of the output pinion (modul, number of teeth, tooth width, etc.) is governed by the customer‘s ring gear.

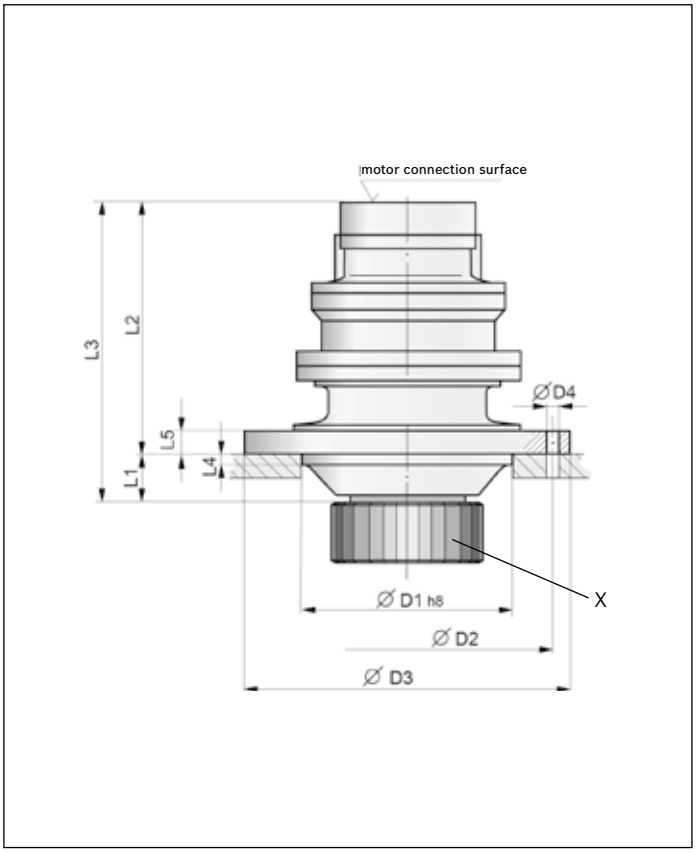

GFB T2/T3 2000 • X = The gearing of the output pinion (modul, number of teeth, tooth width, etc.) is governed by the customer‘s ring gear.

Technical Data

Type/Version GFB	Output Torque Excavator $T_{2\,max}$ Nm	Output Torque Crane $T_{2\,max}$ Nm	Gear Ratio i	Holding Torque $T_{Br\,max}$ Nm	Hydraulic Motor
GFB 9 T2 2000/2	4,000	7,000	33.4	245	A6VM 55 / A2FM 56
GFB 17 T2 1000	7,700	12,700	32.5 • 45.7	390	A2FE 45 • 56
GFB 17 T2 2000	7,700	12,700	45.7	390	A2FE 45 • 56
GFB 24 T2 1000/1	10,600	17,500	149.1	249	A2FM 32
GFB 26 T2 1000	10,000	16,500	43.9 • 51.5	613	A2FE 80
GFB 26 T2 2000	10,000	16,500	43.9 • 51.5	613	A2FE 80
GFB 36 T3 1000/1	17,500	28,500	117.6 • 153.6	332	A2FM 45
GFB 36 T3 1000/2	17,500	28,500	117.6 • 153.6	332	A2FE 45 • 63

GFB 9 T2 2000/**2** = Identification number for different overall lengths, diameters resp. motor attachment variants

Dimensions, Bearing Load Capacities and Mass

Type/Version GFB	D1	D2	D3	D4	D5	Mass
			mm			kg
GFB 9 T2 2000/2	175	260	288	12x 17.5	-	85
GFB 17 T2 1000	256	290	320	16x 17.5	225	130
GFB 17 T2 2000	250	305	340	16x 17.5	-	130
GFB 24 T2 1000/1	265	315	355	20x 17.5	230	165
GFB 26 T2 1000	280	350	380	20x 17.5	250	225
GFB 26 T2 2000	275	335	365	20x 17.5	-	240
GFB 36 T3 1000/1	280	350	380	20x 17.5	250	210
GFB 36 T3 1000/2	280	350	380	18x 17.5	280	175

Type/Version GFB	L1	L2	L3	L4	L5	L6	L7
GFB 9 T2 2000/2	40	325.5	365.5	26	22	-	-
GFB 17 T2 1000	200	300	500	6	38	6	55
GFB 17 T2 2000	57	443	500	46	23	-	-
GFB 24 T2 1000/1	245	387	632	15	34	8	75
GFB 26 T2 1000	250	321	571	12	33	10	85
GFB 26 T2 2000	55	511	566	20	223	-	-
GFB 36 T3 1000/1	245	423	668	12	33	5	85
GFB 36 T3 1000/2	245	332	577	12	33	5	85

Abmessungen

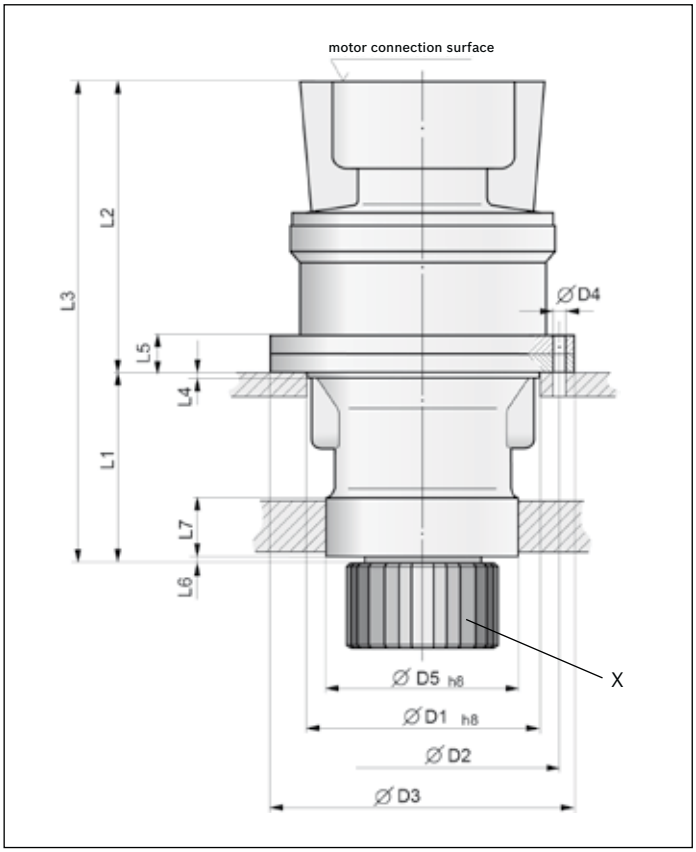

GFB T2/T3 1000 • X = The gearing of the output pinion (modul, number of teeth, tooth width, etc.) is governed by the customer‘s ring gear.

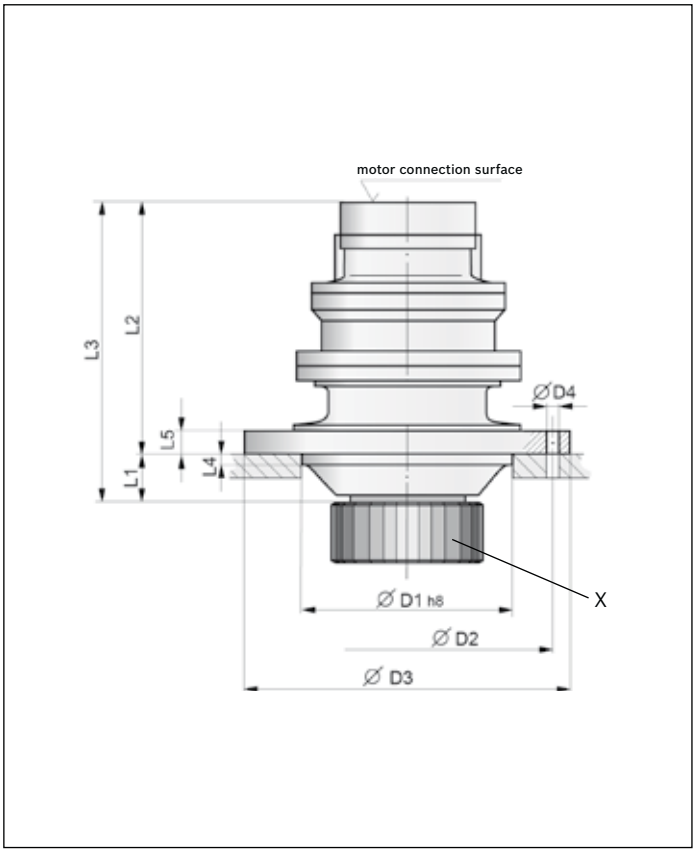

GFB T2/T3 2000 • X = The gearing of the output pinion (modul, number of teeth, tooth width etc.) is governed by the customer‘s ring gear.

Technical Data

Type/Version GFB	Output Torque Excavator $T_{2\,max}$ Nm	Output Torque Crane $T_{2\,max}$ Nm	Gear Ratio i	Holding Torque $T_{Br\,max}$ Nm	Hydraulic Motor
GFB 50 T2 9000	22,000	38,000	32.3	473	A2FE 63
GFB 50 T2 9000/1	22,000	38,000	32.3	473	A2FM 80
GFB 50 T2 9000/2	22,000	38,000	32.3	473	A2FM 80
GFB 50 T3 1000/3	22,000	38,000	147.4	473	A2FM 63
GFB 50 T3 1000/4	22,000	38,000	147.4	473	A2FM 63
GFB 80 T3 1000/3	38,200	68,300	186.4	975	A2FM 80 • 90
GFB 84 T2 2000/1	38,200	68,300	35.1	1,661	A2FM 180 • 200
GFB 84 T2 2000/2	38,200	68,300	35.1	1,661	AA2FM 180

GFB 50 T3 1000/**3** = identification number for different overall lengths, diameters resp. motor attachment variants

Dimensions, Bearing Load Capacities and Mass

Type/Version GFB	D1	D2	D3	D4	D5	Mass
			mm			kg
GFB 50 T2 9000	300	375	410	20x 17.5	280	240
GFB 50 T2 9000/1	300	375	410	20x 17.5	280	240
GFB 50 T2 9000/2	300	375	410	20x 17.5	280	240
GFB 50 T3 1000/3	330	375	411	24x 17.5	300	310
GFB 50 T3 1000/4	330	375	411	24x 17.5	300	315
GFB 80 T3 1000/3	440	480	530	24x 26	370	540
GFB 84 T2 2000/1	400	470	510	24x 26	-	515
GFB 84 T2 2000/2	400	460	510	24x 26	-	515

Type/Version GFB	L1	L2	L3	L4	L5	L6	L7
GFB 50 T2 9000	245	287.5	532.5	12	33	5	-
GFB 50 T2 9000/1	245	292.5	537.5	12	33	5	-
GFB 50 T2 9000/2	245	299.5	544.5	12	33	5	-
GFB 50 T3 1000/3	290	429.5	719.5	15	38	40	75
GFB 50 T3 1000/4	290	396.5	686.5	15	38	40	75
GFB 80 T3 1000/3	314	554.5	868.5	14	40	41	121
GFB 84 T2 2000/1	64	721	785	10	465	-	-
GFB 84 T2 2000/2	64	710	774	10	465	-	-

You wish to receive an offer for the swing drives MOBILEX GFB?

Company: _____
Name/Dept.: _____
Place: _____
Phone: _____
E-mail: _____
Date: _____

Please enclose existing drawings, diagrams, comments and the like.

Page 1/3

Operating data / Design

It is mandatory to fill out all fields!
For exceptions see footnotes.

☐ One centering seat (x) with motor

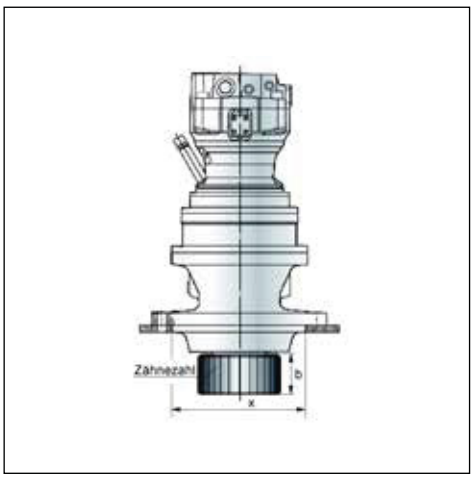

☐ Two centering seats (x) with

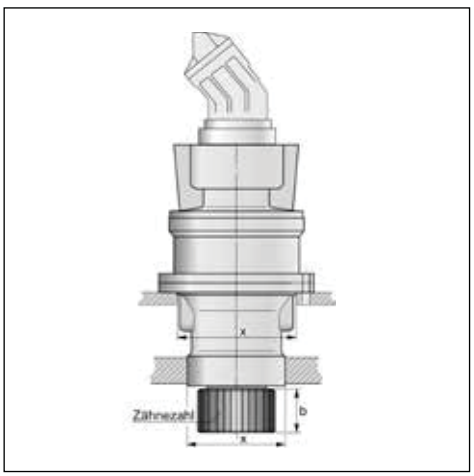

Type of machine _____
Rating acc. to FEM Section I — T _____ L _____ M _____
or
Alternativ load spectrum _____
Ambient temperature from/to _____ °C
Operating machine weight [1] _____ t
Hydraulic lifting power, max. [1] _____ t
Superstructure speed n_O _____ rpm
Superstructure torque T_O _____ kNm
Duty cycles per minute [1] _____

Gearbox
GFB _____
Output torque, max. $T_{2\,max}$ _____ kNm
Output speed, max. $n_{2\,max}$ _____ rpm
Ratio [1] i _____

Output pinion
No. of teeth z _____
Module m _____ mm
Tooth width b _____ mm
Pressure angle ∝ _____ Grad
Profile shift coefficient x _____
Pinion mounting position ☐ Bottom ☐ Top ☐ Horizontal
Gearbox with eccentricity [1] ☐ no ☐ yes: _____ mm

Slewing ring
Slewing ring manufacturer [1] _____
Type [1] _____
Design of slewing ring ☐ Internal gearing ☐ External gearing
No. of teeth slewing ring z _____
Tooth width of slewing ring b _____ mm
Center distance pinion-gear ring [1] _____ mm

Brake
Multiple-disk parking brake ☐ no ☐ yes ☐ wet ☐ dry
Min. parking torque of multiple-disk parking brake _____ Nm
With mechanical unlocking device ☐ yes ☐ no
Release pressure, max P_{max} _____ bar
Release pressure, min [1] P_{min} _____ bar
Top coat specific ☐ no ☐ yes
Color RAL _____

[1] Optional entry

You wish to receive an offer for the swing drives MOBILEX GFB?

Please enclose existing drawings, diagrams, comments and the like.

Company: _____
Name/Dept.: _____
Place: _____
Phone: _____
E-mail: _____
Date: _____

Page 3/3

Dimensions of gearbox

- Standard dimensions see available Technical data sheet" from Rexroth
- With differing requirements/dimensions please attach a sketch

Technical basic data hydraulic motor

Hydraulic circuit	☐ open ☐ closed	
Motor type code	_____	
Displacement	$V_{g\ min}$ _____	cm^3
Displacement	$V_{g\ max}$ _____	cm^3
Flushing valve	☐ yes ☐ no	
Speed sensor, If yes, type	☐ yes, Type _____ ☐ no	
Counter balance valve	☐ yes ☐ no	
Pressure relief valve	☐ yes ☐ no	
Setting	_____	bar
Working pressure	Δp _____	bar
Input flow, max.	$q_{v\ max}$ _____	l/min

Estimated no. of transmission units per year [1)] _____
Price range [1)] _____
Requested ship date RSD [1)] _____
Special application conditions _____
Further customer-specific requirements _____
Are there any legal requirements and/or standards to be considered?
☐ no ☐ yes If yes, please specify _____

[1)] Optional entry

You wish to receive an offer for the swing drives MOBILEX GFB?

Company: _____
Name/Dept.: _____
Place: _____
Phone: _____
E-mail: _____
Date: _____

Please enclose existing drawings, diagrams, comments and the like.

Page 3/3

Others (e.g. load spectra, application-relevant data, customer drawings, nameplate):

Notes

Notes

Planetary gearboxes for mobile units

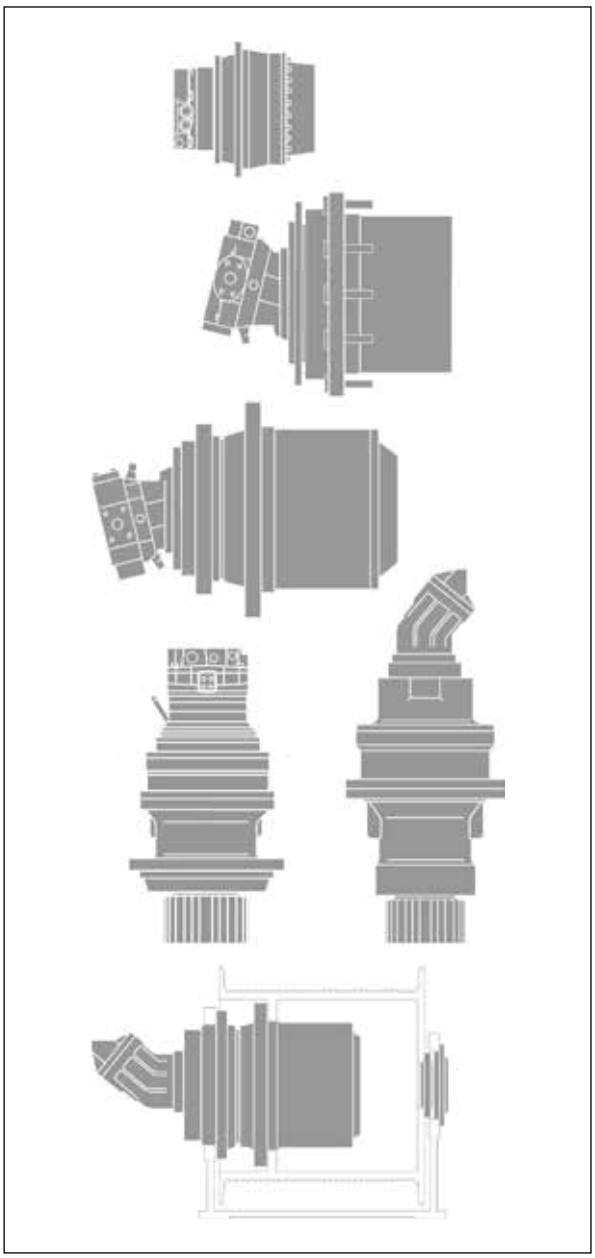

Hydrostatic travel drives

- HYDROTRAC GFT
  For fixed- or variable-displacement motors
  Output torques between 9,5 and 580 kNm
  Data sheet RE 77110
- HYDROTRAC GFT 2000
  Series 30
  Output torques between 13,5 and 42,5 kNm
  Data sheet RE 77116
- HYDROTRAC GFT 8000
  Series 30
  Output torques between 20 and 30 kNm
  Data sheet RE 77128
- HYDROTRAC GFT 8000
  Series 40
  Output torques between 10 and 130 kNm
  Data sheet RE 77117
- HYDROTRAC GFT 45 T2/T3
  Output torques max. 45 kNm
  Data sheet RE 77115

Hydrostatic swing drives

- MOBILEX GFB
  For fixed- or variable-displacement motors
  Output torques between 4 and 68,3 kNm
  Data sheet RE 77201
- MOBILEX GFB 2000
  Series 20
  Output torques between 4 and 14,5 kNm
  Data sheet RE 77206

Hydrostatic winch gears

- MOBILEX GFT-W
  For fixed- or variable-displacement motors
  Output torques between 14 and 325 kNm
  Data sheet RE 77502

Rexroth
Bosch Group

MOBILEX GFB

Drive unit for revolving superstructures

Series 2000

Data sheet

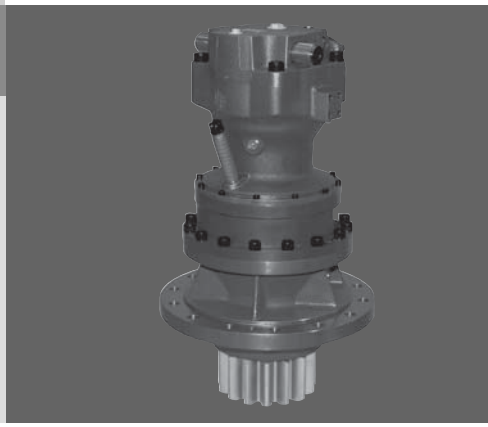

Contents

	Page
Dimensions	
Technical data	2

Description

The hydrostatic drive unit of the GFB 2000 series consits of a two-stage planetary gearbox with an attached hydraulic swash plate slew drive motor. This compact drive is designed for swiveling a revolving superstructure of a crawler or wheel excavators. The slew drive motor is provided with an integrated static multiple disk brake and a vibration damping valve.

- Compact, space-saving two-stage drive unit
- Multiple disk brake integrated into the motor
- Built-on brake release valve
- Standard configuration with a vibration damping valve
- Good anti-cavitation method
- Compact design by integrated valves
- Easy installation as a complete unit
- Open circuit

GFB type	Max. output torque	Motor displacement	Max. pressure	Gear ratio	Max. braking torque, static	Weight approx.	Tonnage class
	Nm	cm^3	bar	i	Nm	kg	to
GFB 2120 E	4,000	45	350	21	215	90	7 - 10
GFB 2140 E	5,500	75	350	18.3	380	120	10 - 15
GFB 2160 E	14,500	150 / 170	350	20.7	650/700	265	20 - 25
GFB 2180 E			in preparation				30 - 35

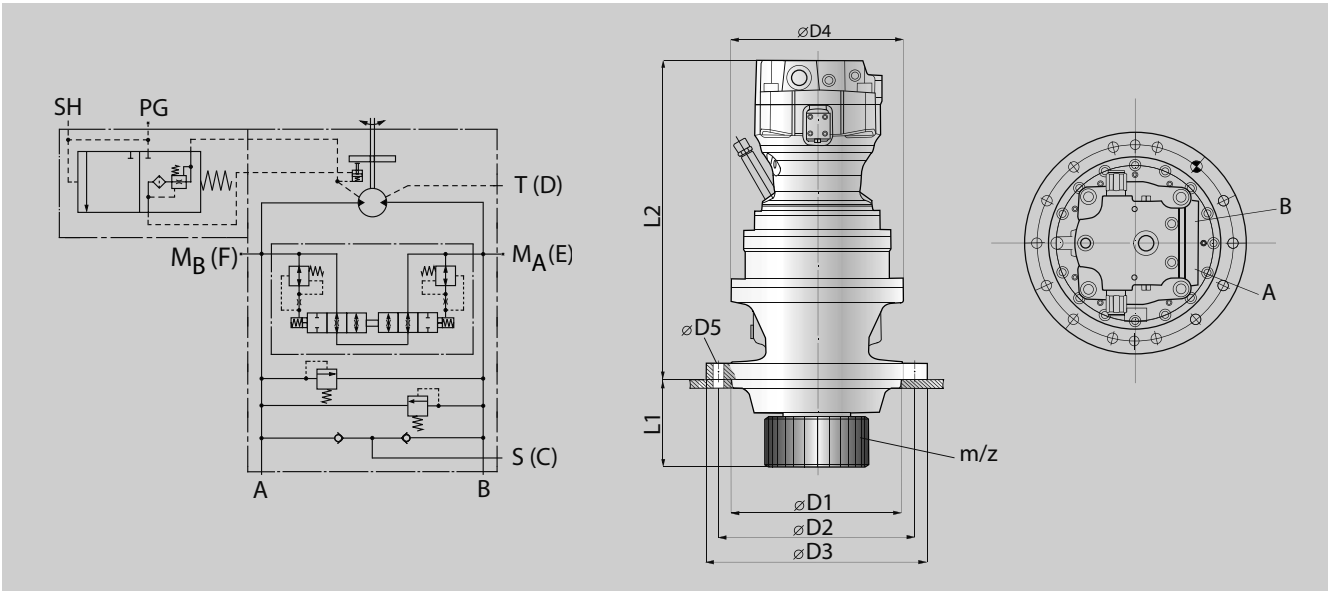

GFB type	D1	D2	D3	D4	D5	L1	L2	A/B	C	D	E/F	PG	SH	m	z
								mm							
GFB 2120 E	200	275	310	251	8x ø18	104	436.4	Pressure port	Suction connection	Leakage oil connection	Measuring connection	Control pressure port	Control pressure port	Module on request	No. of teeth on request
GFB 2140 E	200	290	323	260	9x ø18 + 1x ø20	136	474.5								
GFB 2160 E	345	400	450	350	13x ø22 + 1x ø24	179	586.5								
GFB 2180 E	in preparation														

Winch drives
MOBILEX GFT-W
for mobile applications

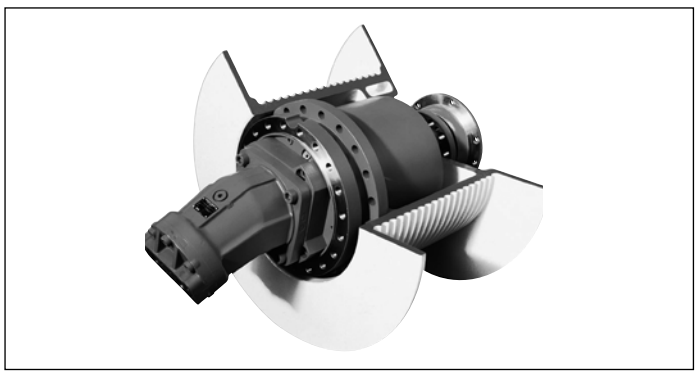

- Sizes GFT 17 W to GFT 450 W
- Output torques between 14 and 325 kNm
- Rope pull forces from 67 to 684 kN

Features

- Compact, space-saving planetary gearbox design
- Planet wheel carried in full-complement bearings
- Robust bearing system absorbing the forces exerted by the rope pull
- Easy assembly
- Easy oil change
- Integrated static multiple-disk parking brake
- Low-noise operation

Content

Functional description	2
Version, overview	3
Design, classification	4
Dimensions, Technical data	6
Customer specification winch drive application	15
Notes	18
Product range	20

Functional description

Description

The hydrostatic Rexroth winch drives MOBILEX GFT-W are the ideal drive components for winches. They have proven their worth in the most arduous applications and under tough operating conditions. MOBILEX GFT-W winch drives are used in all kinds of winches - mobile and crawler cranes, railroad cranes, shipboard, dockside and container cranes. Due to their extremely compact design, the gear units can be mounted inside the rope drum in a space-saving manner. They are designed for ease of installation and maintenance. High-quality manufacturing processes and the use of case-hardened gearwheels as well as quenched, tempered and surface-hardened ring gears warrant outstanding load-carrying capacity, operational safety and low-noise running characteristics.

The teeth of the gearwheels are designed according to standard specifications and our own strength calculations, which have been developed based on our comprehensive konw-how and are optimally adapted to our manufacturing processes. The drives provide optimum total efficiency due to the use of Rexroth hydraulic motors, among other things

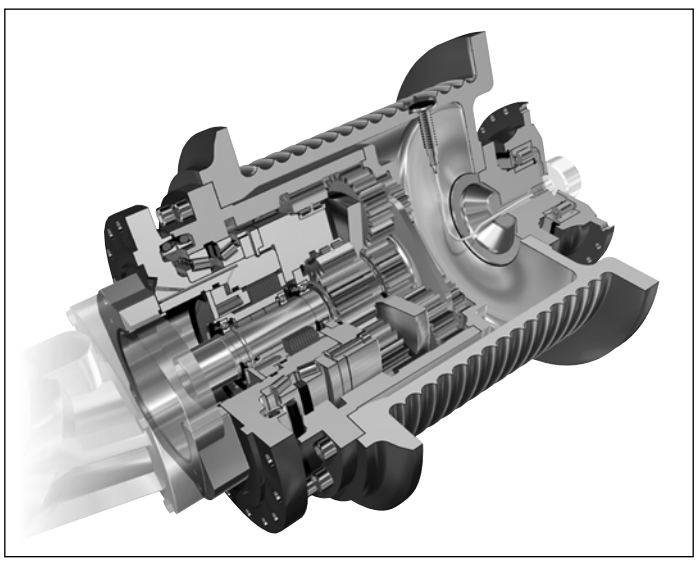

Three-stage hydrostatic Rexroth winch drive MOBILEX GFT-W with static spring pressure multiple-disk parking brake and connection for Rexroth hydraulic motor

Lubrication

The gears and bearings are splash-lubricated. The drive units are maintenance-free save for periodic oil changes, which are convenient to make. Only the oils specified in the operating manual should be used in the gearboxes.
The change intervals for different operating conditions are also specified in the operating manual.

Spring pressure multiple-disk parking brake
In the standard version, one spring-loaded, hydraulic release spring pressure multiple-disk parking brake is installed on the drive end.

$$T_{Br.\ sta.\ min} = 1{,}6 \bullet T_{1\ (Input\ torque)}$$

The spring pressure multiple-disk parking brake is not a service brake, but a static parking brake, which must not be used for braking the load.
The device engineer/operator must provide a separate service or emergency brake if necessary.
The holding torque is multiplied according to the selected transmission.

Hydraulic motors

The gearbox is designed for direct flange-attachment of a variable or fixed-displacement motor (preferably a Rexroth hydraulic motor).

Version, overview

Explanation version

2000 = Oil inlet, oil outlet, oil level on the gear cover
4000 = Oil inlet, oil outlet, motor-side oil level
6000 = Oil inlet, oil outlet, motor-side oil level
Installation of 2 gearboxes in a hoisting drum possible
8000 = Optional with back stop
(built-in between gearbox and holding brake)
9000 = Special version

Options

Upon request, the drives can be supplied with the following accessories:

Counter bearing, hoisting drum, winch frame

In addition to the standard delivery scope, the winch drives of series can also be delivered:

- with counter bearing
- with counter bearing and hoisting drum
- with counter bearing, hoisting drum and winch frame

Limit switches

Upon request, special counter bearings can be designed with a connection option for specific gear cam limit switches.

Overview of MOBILEX GFT-W Winch Drives

Type/design GFT-W	Output torque [1] $T_{2\,max}$ Nm	Rope pull max. [2] kN	Gear ratio from/to i
GFT 17 W2	14000	67	37,6 - 54
GFT 17 W3	14000	74	77,9 - 102,6
GFT 24 W3	19000	99	90,1 - 137,2
GFT 26 W2	18000	84	42,9 - 62
GFT 36 W3	26000	118	67 - 138,8
GFT 40 W2	27000	108	35,9 - 59,1
GFT 50 W3	37500	150	84,2 - 125,6
GFT 60 W3	42500	164	63,8 • 94,8
GFT 80 W3	67000	231	61,3 - 215
GFT 110 W3	100000	300	79,5 - 173,9
GFT 160 W3	140000	373	133 - 251
GFT 220 W3	200000	471	97,7 - 293
GFT 330 W3	275000	595	168,9 - 252
GFT 450 W4	325000	684	293,4 • 421,7

[1] Design according to FEM L2, T5, M5
[2] Based on a theoretical 1st layer winding diameter D_{ws}

Design, classification

Application Conditions

The gearboxes have been designed for use at ambient temperatures of between -20°C and +40°C. Environmental influences such as salt water, safety air, sand, dust, overpressure, heavy vibrations, extreme shocks and ambient temperatures, aggressive media, etc. will affect the function of the product. Such influences must be specified to ensure that the winch drive is designed to safety meet the requirements.

Gearbox design

The gearbox design is based on many years of practical experience. The maximum output torques $T_{2\,max}$ indicated under Technical Data relate to FEM Section I, 3rd issue and Section IX (FEM - Fédération Européene de la Manutention), as well as DIN 15020, collective load class L2, service time category T5 corresponding to driver group M5. The reference output speed is 25 revolutions per minute maximum. If the winch is classified into a different driver group, the required output torque must be converted by applying factor K (see table).
This results in the maximum permissbile output torque for the new classification. Whether or not the selected overall classification is feasible, will be determined by the specialists of Rexroth.

Fleet Angle

Observing the admissible fleet angle ∝ is prerequisite for proper cable winding.

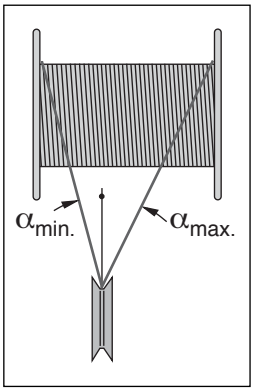

The fleet angle ∝ should not be smaller than 0,5°, so that the rope does not ascend the drum flange and runs safely into the next layer. The fleet angle ∝ should not be larger than 1,5°, so that the rope in the first rope layer does not get pulled against the groove and by several rope layers on the rope drum are properly wound up to the drum flanges.

Gearbox selection

- T_2 = output torque
  F = rope pull in [N]
  D_W = relevant winding diameter in [m]

$$T_2 = \frac{F \cdot D_W}{2}$$

- T_{2K} = corrected output torque
  K factor according to the service time category and collective group given in the table

$$T_{2K} = T_2 \cdot K$$

- T_{2K} of the gearbox to be selected must be ≤ $T_{2\,max}$ (according to the bulletin).

See also gearbox design
See page 15 for a data sheet relating to the winch drive design.

Driver Groups and Service Time Categories to FEM, section I, 3rd edition 1987
(FEM: Fédération Européene de la Manutention)

Service time category				T2	T3	T4	T5	T6	T7	T8
Assumed average service time per day in hours				0,25 - 0,5	0,5 - 1	1 - 2	2 - 4	4 - 8	8 - 16	> 16
Theoretical service life in hours				400 - 800	800 - 1800	1600 - 3200	3200 - 6300	6300 - 12500	12500 - 25000	25000 - 50000
Load spectrum				Drive group with K factor						
Collective Groups	L1	light	Maximum loads occuring in exceptional cases only, side loads constantly	M 1 0,90	M 2 0,90	M 3 0,90	M 4 0,90	M 5 0,95	M 6 1,05	M 7 1,2
	L2	medium	small, medium and maximum loads about equally distributed over service time	M 2 0,90	M 3 0,95	M 4 0,95	M 5 1	M 6 1,15	M 7 1,30	M 8 1,50
	L3	heavy	loads always near maximum	M 3 1,05	M 4 1,05	M 5 1,10	M 6 1,25	M 7 1,40	M 8 1,60	M 8 1,80
	L4	very heavy	Always maximum load	M 4 1,25	M 5 1,30	M 6 1,45	M 7 1,65	M 8 1,85	M 8 2,10	M 8 2,40

Classification examples (see FEM section I, 3rd edition, table T.2.1.3.5.)

Type of crane (Designation)	**Component operated** [1)]	Type of Driver				
		Hoisting	Swinging	Level luffing	Trolley travelling	Crane travelling
Erection cranes		M 2 - M 3	M 2 - M 3	M 1 - M 2	M 1 - M 2	M 2 - M 3
Loading bridges	Hooks	M 5 - M 6	M 4	-	M 4 - M 5	M 5 - M 6
Loading bridges	Grab or magnet	M 7 - M 8	M 6	-	M 6 - M 7	M 7 - M 8
Workshop cranes		M 6	M 4	-	M 4	M 5
Overhead travelling cranes, ram cranes, Scrapyard cranes	Grab or magnet	M 8	M 6	-	M 6 - M 7	M 7 - M 8
Unloading bridges, container gantry cranes	Hooks or spreaders	M 6 - M 7	M 5 - M 6	M 3 - M 4	M 6 - M 7	M 4 - M 5
Other portal cranes (with trolley and/or slewing ring)	hooks	M 4 - M 5	M 4 - M 5	-	M 4 - M 5	M 4 - M 5
Unloading bridges, container gantry cranes (with trolley and/or slewing ring)	Grab or magnet	M 8	M 5 - M 6	M 3 - M 4	M 7 - M 8	M 4 - M 5
Berth cranes, shipyard cranes, Dismantling cranes	Hooks	M 5 - M 6	M 4 - M 5	M 4 - M 5	M 4 - M 5	M 5 - M 6
Dockside cranes (slewable, gantry type, . . .), floating cranes, floating sheerlegs	Hooks	M 6 - M 7	M 5 - M 6	M 5 - M 6	-	M 3 - M 4
Dockside cranes (slewable, gantry type, . . .), floating cranes, floating sheerlegs	Grab or magnet	M 7 - M 8	M 6 - M 7	M 6 - M 7	-	M 4 - M 5
Floating cranes and floating sheerlegs for very high loads (normally above 100 t)		M 3 - M 4	M 3 - M 4	M 3 - M 4	-	-
Shipboard cranes	Hooks	M 4	M 3 - M 4	M 3 - M 4	M 2	M 3
Shipboard cranes	Grab or magnet	M 5 - M 6	M 3 - M 4	M 3 - M 4	M 4 - M 5	M 3 - M 4
Tower cranes for construction sites		M 4	M 5	M 4	M 3	M 3
Derrick tower gantry		M 2 - M 3	M 1 - M 2	M 1 - M 2	-	-
Railway cranes approv. or service in trains		M 3 - M 4	M 2 - M 3	M 2 - M 3	-	-
Vehicle-mounted cranes	Hooks	M 3 - M 4	M 2 - M 3	M 2 - M 3	-	-

[1)] The column only shows some typical areas of winch use for informative purposes.

Dimensions, Technical data

Dimensions

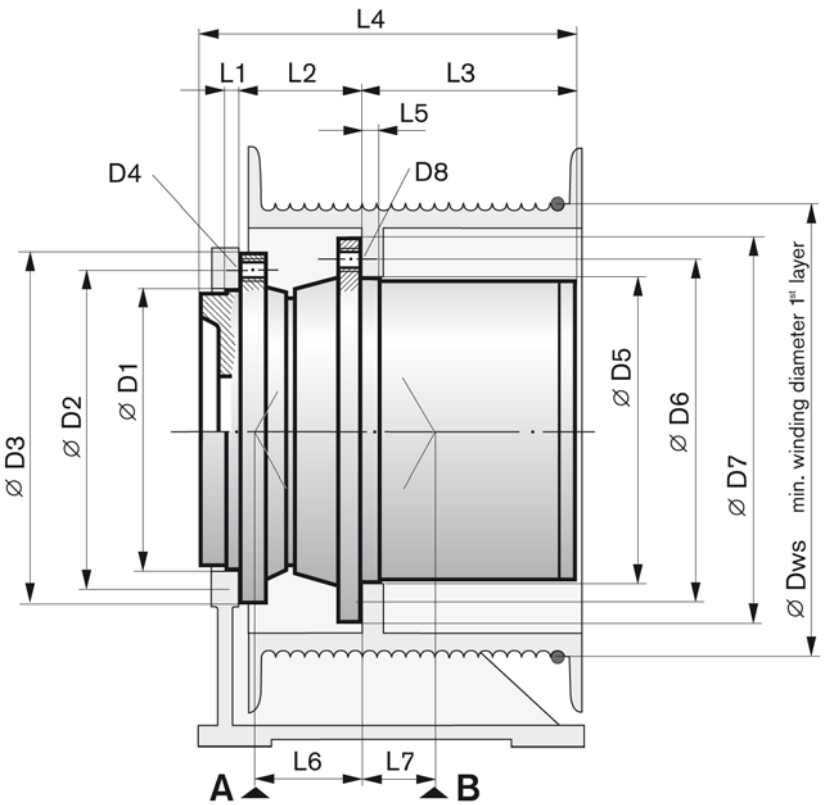

Dimensions of the counter bearing
see page 14

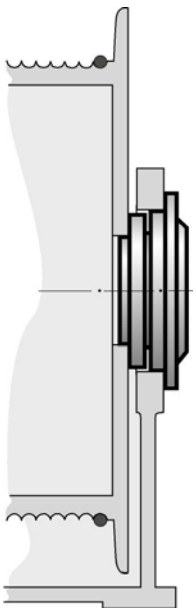

Optional (only in connection with version ≥ 4000)

Technical data

Type/design GFT-W	Output torque $T_{2\,max}$ Nm	Rope pull max. kN	Transmission ratio i	Holding torque $T_{Br\,max}$ Nm	Hydraulic motor
GFT 17 W2 2000	14000	67	37,6 • 45,4 • 54	460	A6VE 55 / A2FE 45 • 56 • 63
GFT 17 W2 4000	14000	67	37,6 • 45,4 • 54	460	A6VE 55 / A2FE 45 • 56 • 63
GFT 17 W3 2000	14000	74	77,9 • 88,2 • 102,6	460	A6VE 55 / A2FE 45 • 56 • 63
GFT 17 W3 4000	14000	74	77,9 • 88,2 • 102,6	460	A6VE 55 / A2FE 45 • 56 • 63
GFT 24 W3 2000	19000	99	90,1 • 102,6 • 120,5 • 137,2	460	A6VE 55 / A2FE 45 • 56 • 63
GFT 24 W3 4000	19000	99	90,1 • 102,6 • 120,5 • 137,2	460	A6VE 55 / A2FE 45 • 56 • 63
GFT 26 W2 2000	18000	84	42,9 • 50,5 • 62	710	A6VE 80 / A2FE 80 • 90
GFT 26 W2 4000	18000	84	42,9 • 50,5 • 62	710	A6VE 80 / A2FE 80 • 90
GFT 36 W3 2000/1	26000	118	67 • 79,4 • 99,1 • 115 • 138,8	680	A6VE 55 / A2FE 45 • 56 • 63
GFT 36 W3 2000/2	26000	118	67 • 79,4 • 99,1 • 115 • 138,8	680	A6VE 80 • 107 / A2FE 80 • 90
GFT 36 W3 4000/1	26000	118	67 • 79,4 • 99,1 • 115 • 138,8	680	A6VE 55 / A2FE 45 • 90
GFT 36 W3 4000/2	26000	118	67 • 79,4 • 99,1 • 115 • 138,8	680	A6VE 80 • 107 / A2FE 80 • 90

GFT 36 W3 4000/**2** = index no. for different structural lengths, diameter or motor attachment

Dimensions, masses

Type/design GFT-W	D1	D2	D3	D4	D5	D6	D7	D8	D_{ws}
					mm				
GFT 17 W2 2000	250	290	320	16x M20	280	305	330	16x M16	380
GFT 17 W2 4000	250	290	320	14x M20	280	305	330	16x 17,5	380
GFT 17 W3 2000	250	290	320	16x M20	280	305	330	16x M16	380
GFT 17 W3 4000	250	290	320	14x M20	280	305	330	16x 17,5	380
GFT 24 W3 2000	240	285	320	20x M20	280	305	330	20x M16	385
GFT 24 W3 4000	250	290	320	20x M20	280	305	330	20x 18	385
GFT 26 W2 2000	270	310	350	16x M20	320	350	380	20x M16	430
GFT 26 W2 4000	270	310	350	14x M20	320	350	380	20x 18	430
GFT 36 W3 2000/1	270	310	350	16x M20	320	350	380	20x M16x1,5	440
GFT 36 W3 2000/2	270	310	350	16x M20	320	350	380	20x M16x1,5	440
GFT 36 W3 4000/1	270	310	350	16x M20	320	350	380	20x 18	440
GFT 36 W3 4000/2	270	310	350	16x M20	320	350	380	20x 18	440

Type/design GFT-W	L1	L2	L3	L4	L5	L6	L7	A + B		Mass
								C	Co	
				mm				kN		kg
GFT 17 W2 2000	16	82	152	264	18	56	47	108	142	105
GFT 17 W2 4000	16	82	152	264	18	56	47	108	142	105
GFT 17 W3 2000	16	82	174	286	18	56	47	140	290	115
GFT 17 W3 4000	16	82	174	286	18	56	47	140	290	115
GFT 24 W3 2000	16	82	189,5	301,5	18	56	47	140	290	130
GFT 24 W3 4000	16	82	189,5	301,5	18	56	47	140	290	130
GFT 26 W2 2000	20	90	220	340	25	58	50	186	400	136
GFT 26 W2 4000	20	90	220	340	25	58	50	186	400	136
GFT 36 W3 2000/1	20	90	210	343	25	56,5	56,5	170	405	155
GFT 36 W3 2000/2	10	90	200	300	25	56,5	56,5	170	405	155
GFT 36 W3 4000/1	20	90	210	343	25	56,5	56,5	170	405	155
GFT 36 W3 4000/2	10	90	200	300	25	56,5	56,5	170	405	155

Dimensions

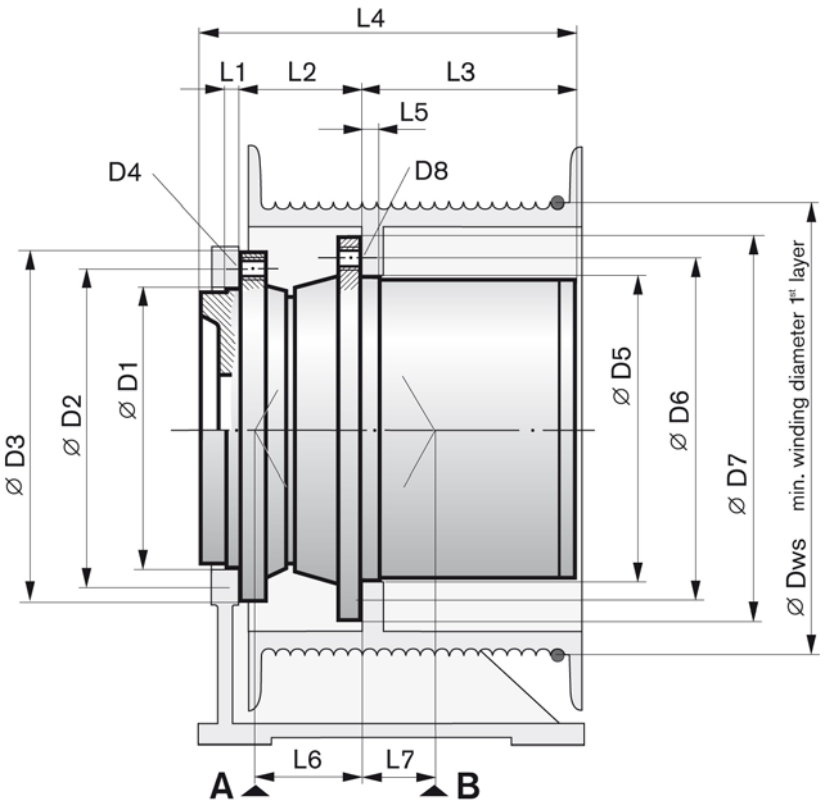

Dimensions of the counter bearing see page 14

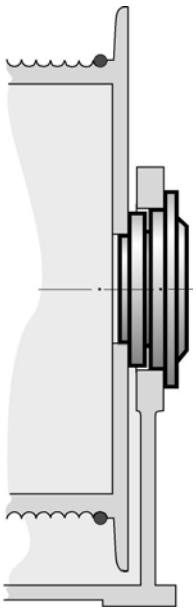

Optional (only in connection with version ≥ 4000)

Technical data

Type/design GFT-W	Output torque $T_{2\,max}$ Nm	Rope pull max. kN	Transmission ratio i	Holding torque $T_{Br\,max}$ Nm	Hydraulic motor
GFT 40 W2 4000/1	27000	108	35,9 • 41 • 48,3 • 59,1	1080	A6VE 80 • 107 / A2FE 80 • 90
GFT 40 W2 4000/2	27000	108	35,9 • 41 • 48,3 • 59,1	1080	A6VE 107 • 160 / A2FE 107 • 125
GFT 50 W3 2000	37500	150	84,2 • 91,1 • 125,6	800	A6VE 80 • 107 / A2FE 80 • 90
GFT 50 W3 4000	37500	150	84,2 • 91,1 • 125,6	800	A6VE 80 • 107 / A2FE 80 • 90
GFT 60 W3 4000	42500	164	63,8 • 94,8 • 105,5 • 119,8 • 139,9 • 169,9	720	A6VE 80 • 107 / A2FE 80 • 90
GFT 60 W3 6000	42500	164	63,8 • 94,8	1620	A6VM 107 • 160 • 200 • 250 / A2FM 107 • 125 • 160 • 180 • 200
GFT 60 W3 8000	42500	164	63,8 • 94,8	1620	A6VM 107 • 160 • 200 • 250 / A2FM 107 • 125 • 160 • 180 • 200
GFT 80 W3 6000/1	67000	231	61,3 • 79,1 • 99 • 126,9 • 149,5 • 215	1890	A6VM 160 / A2FM 160 • 180
GFT 80 W3 6000/2	67000	231	61,3 • 79,1 • 99 • 126,9 • 149,5 • 215	1890	A6VM 200 • 250 / A2FM 200
GFT 80 W3 8000/1	67000	231	61,3 • 79,1 • 99 • 126,9 • 149,5 • 215	1890	A6VM 160 / A2FM 160 • 180
GFT 80 W3 8000/2	67000	231	61,3 • 79,1 • 99 • 126,9 • 149,5 • 215	1890	A6VM 200 • 250 / A2FM 200
GFT 80 W3 8000/3	67000	231	61,3 • 79,1 • 99 • 126,9 • 149,5 • 215	1890	A6VM 107 / A2FM 107 • 125

GFT 80 W3 8000/**2** = index no. for different structural lengths, diameter or motor attachment

Dimensions, masses

Type/design GFT-W	D1	D2	D3	D4	D5	D6	D7	D8	D_{ws}
					mm				
GFT 40 W2 4000/1	270	310	350	17x M20x1,5	350	400	440	16x 22	500
GFT 40 W2 4000/2	330	370	410	18x M20	350	400	440	16x 22	500
GFT 50 W3 2000	270	310	350	20x M20x1,5	350	400	430	16x M20x1,5	500
GFT 50 W3 4000	270	310	350	18x M20x1,5	350	400	430	16x 22	500
GFT 60 W3 4000	330	370	410	20x M20x1,5	370	410	450	20x 22	520
GFT 60 W3 6000	360	405	440	12x M24	370	405	440	16x 22	520
GFT 60 W3 8000	360	405	440	12x M24	370	405	440	16x 22	520
GFT 80 W3 6000/1	380	430	470	28x M24	430	460	495	24x 22	580
GFT 80 W3 6000/2	380	430	470	28x M24	430	460	495	24x 22	580
GFT 80 W3 8000/1	380	430	470	28x M24	430	460	495	24x 22	580
GFT 80 W3 8000/2	380	430	470	28x M24	430	460	495	24x 22	580
GFT 80 W3 8000/3	380	430	470	28x M24	430	460	495	24x 22	580

Type/design GFT-W	L1	L2	L3	L4	L5	L6	L7	A + B		Mass
								C	Co	
				mm				kN		kg
GFT 40 W2 4000/1	25	82	243	364,5	30	57	54	212	425	192
GFT 40 W2 4000/2	25	108,5	243	376,5	30	56,5	54	212	425	219
GFT 50 W3 2000	25	82	281,5	403	30	62	48	212	425	212
GFT 50 W3 4000	25	82	281,5	403	30	56,5	54	212	425	212
GFT 60 W3 4000	25	114	284	423	30	79	38	250	520	230
GFT 60 W3 6000	6	115	271	434,5	16	84	25	250	520	230
GFT 60 W3 8000	6	115	271	434,5	16	84	25	250	520	230
GFT 80 W3 6000/1	10	120	295	484	30	76	19	212	425	430
GFT 80 W3 6000/2	10	120	295	484	30	76	19	212	425	430
GFT 80 W3 8000/1	10	120	295	604	30	76	19	212	425	430
GFT 80 W3 8000/2	10	120	295	604	30	76	19	212	425	430
GFT 80 W3 8000/3	10	120	295	583	30	76	19	212	425	430

Dimensions

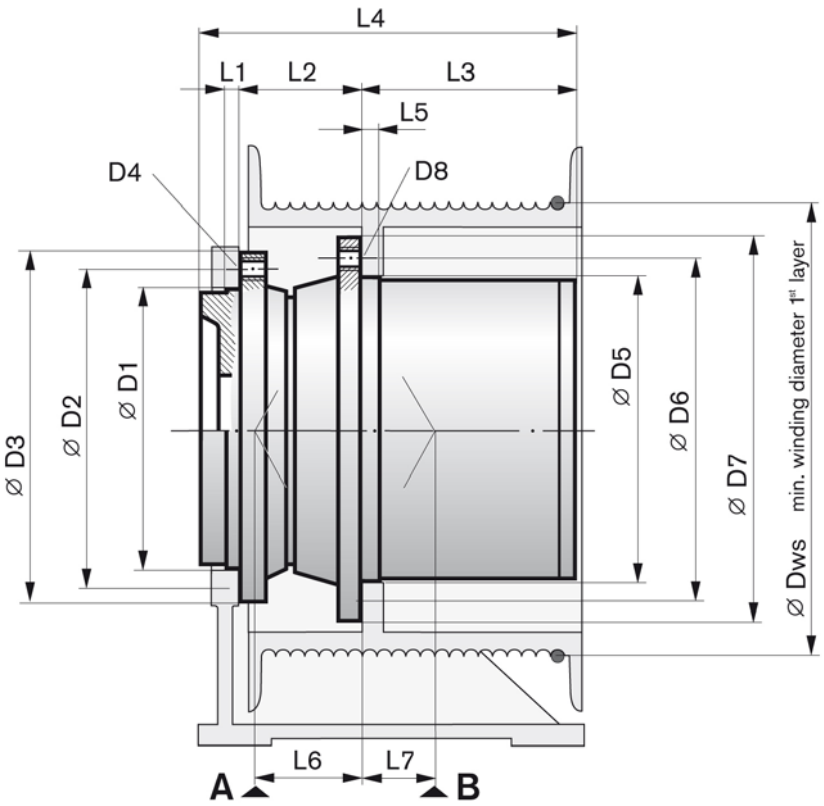

Dimensions of the counter bearing see page 14

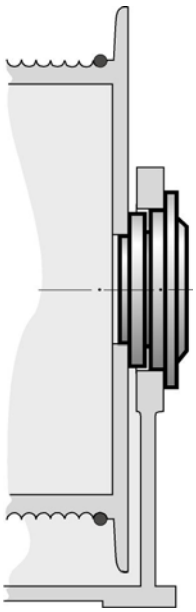

Optional (only in connection with version ≥ 4000)

Technical data

Type/design GFT-W	Output torque $T_{2\,max}$ Nm	Rope pull max. kN	Transmission ratio i	Holding torque $T_{Br\,max}$ Nm	Hydraulic motor
GFT 110 W3 4000	100000	300	95,8 • 114,8 • 128,6 • 147,2 • 173,9	1100	A6VE 107 • 160 / A2FE 107 • 125 • 160 • 180
GFT 110 W3 6000/1	100000	300	79,5 • 95,8 • 114,8 • 128,6 • 147,2 • 173,9	1890	A6VM 200 • 250 / A2FM 200
GFT 110 W3 6000/2	100000	300	79,5 • 95,8 • 114,8 • 128,6 • 147,2 • 173,9	1890	A2FM 250
GFT 110 W3 6000/3	100000	300	79,5 • 95,8 • 114,8 • 128,6 • 147,2 • 173,9	1890	A6VM 160 / A2FM 160 • 180
GFT 110 W3 6000/4	100000	300	79,5 • 95,8 • 114,8 • 128,6 • 147,2 • 173,9	1890	A6VM 107 • 250 / A2FM 107 • 125 • 200
GFT 110 W3 8000/1	100000	300	79,5 • 95,8 • 114,8 • 128,6 • 147,2 • 173,9	1890	A6VM 200 • 250 / A2FM 200
GFT 110 W3 8000/2	100000	300	79,5 • 95,8 • 114,8 • 128,6 • 147,2 • 173,9	1890	A6VM 160 / A2FM 160 • 180
GFT 110 W3 8000/3	100000	300	79,5 • 95,8 • 114,8 • 128,6 • 147,2 • 173,9	1890	A6VM 107 / A2FM 107 • 125
GFT 110 W3 9000	100000	300	79,5 • 95,8 • 114,8 • 128,6 • 147,2 • 173,9	1500	A6VM 160 • 200 • 250 / A6VE 160 / A2FM 107 • 125 • 160 • 180

GFT 110 W3 6000/**4** = index no. for different structural lengths, diameter or motor attachment

Dimensions, masses

Type/design GFT-W	D1	D2	D3	D4	D5	D6	D7	D8	D_{ws}
					mm				
GFT 110 W3 4000	420	460	500	24x M24	460	500	540	36x 20	640
GFT 110 W3 6000/1	380	430	470	28x M24	490	530	567	24x 26	650
GFT 110 W3 6000/2	380	430	470	28x M24	490	530	567	24x 26	650
GFT 110 W3 6000/3	380	430	470	28x M24	490	530	567	24x 26	650
GFT 110 W3 6000/4	380	430	470	28x M24	490	530	567	24x 26	650
GFT 110 W3 8000/1	380	430	470	28x M24	490	530	567	24x 26	650
GFT 110 W3 8000/2	380	430	470	28x M24	490	530	567	24x 26	650
GFT 110 W3 8000/3	380	430	470	28x M24	490	530	567	24x 26	650
GFT 110 W3 9000	380	430	470	28x M24	490	530	567	24x 26	650

Type/design GFT-W	L1	L2	L3	L4	L5	L6	L7	A + B		Mass
								C	Co	
				mm				kN		kg
GFT 110 W3 4000	21,5	165	305	491,5	30	107	25	A 509 B 480	A 1080 B 950	440
GFT 110 W3 6000/1	10	140	280	489	15	96	-2	212	425	460
GFT 110 W3 6000/2	10	140	280	489	15	96	-2	212	425	406
GFT 110 W3 6000/3	10	140	280	489	15	96	-2	212	425	515
GFT 110 W3 6000/4	10	140	280	481	15	96	-2	212	425	460
GFT 110 W3 8000/1	10	140	280	598	15	96	-2	212	425	460
GFT 110 W3 8000/2	10	140	280	598	15	96	-2	212	425	460
GFT 110 W3 8000/3	10	140	280	598	15	96	-2	212	425	460
GFT 110 W3 9000	10	140	290	498	15	94	0	212	425	515

Dimensions

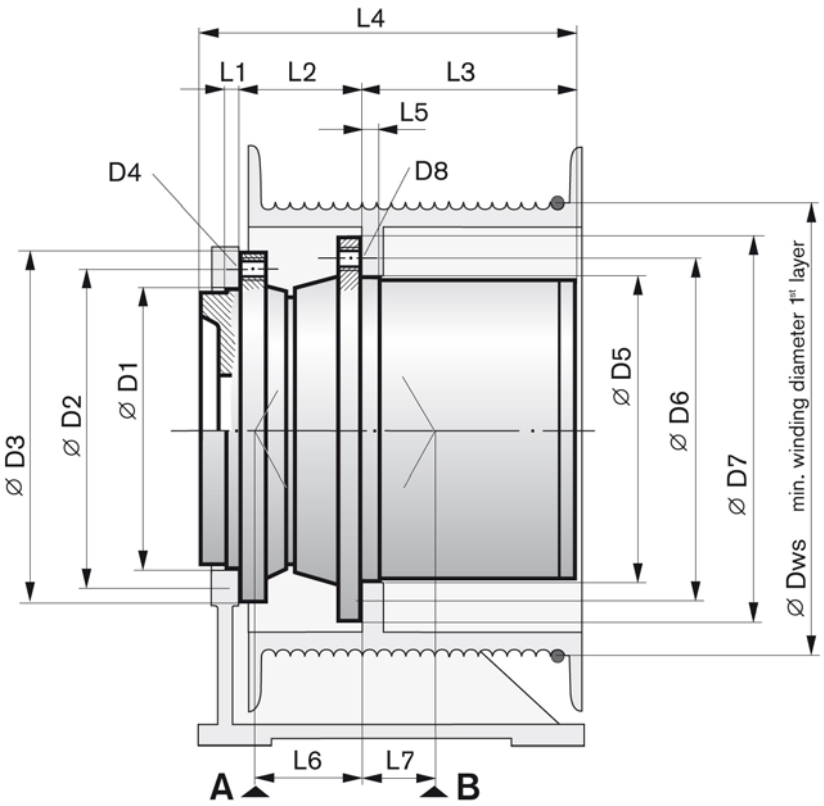

Dimensions of the counter bearing see page 14

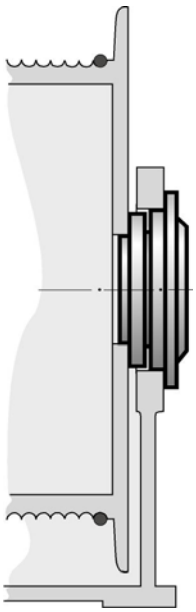

Optional (only in connection with version ≥ 4000)

Technical data

Type/design GFT-W	Output torque $T_{2\,max}$ Nm	Rope pull max. kN	Transmission ratio i	Holding torque $T_{Br\,max}$ Nm	Hydraulic motor
GFT 160 W3 4000	140000	373	133 • 210,8 • 251	1360	A6VM 200 / A6VE 107 • 160 / A2FE 107 • 125 • 160 • 180
GFT 220 W3 4000/1	200000	471	97,7 • 105,9 • 143,3 • 155,4 • 188,9 • 246,1 • 293	1360	A6VE 107 • 160 / A2FE 107 • 125 • 160 • 180
GFT 220 W3 4000/2	200000	471	97,7 • 105,9 • 143,3 • 155,4 • 188,9	1360	A6VM 200 • 250 / A2FM 200
GFT 220 W3 6000/1	200000	471	188,9 • 246,1 • 293	1360	A6VE 107 • 160 / A2FE 107 • 125 • 160 • 180
GFT 220 W3 6000/2	200000	471	97,7 • 105,9 • 143,3 • 155,4 • 188,9	2200	A6VM 200 • 250 / A2FM 200
GFT 330 W3 9000/1	275000	595	209,8 • 252	2860	A6VE 250 / A2FE 250
GFT 330 W3 9000/2	275000	595	168,9 • 181,7	2x 1700	2x A6VM 160
GFT 450 W4 6000	325000	684	293,4 • 421,7	2300	A6VE 250 / A2FE 250

GFT 220 W3 4000/**2** = index no. for different structural lengths, diameter or motor attachment

Dimensions, masses

Type/design GFT-W	D1	D2	D3	D4	D5	D6	D7	D8	D_{ws}
					mm				
GFT 160 W3 4000	450	510	560	30x M24x2	535	600	650	30x 30	750
GFT 220 W3 4000/1	460	600	650	30x M30	610	680	735	24x 33	850
GFT 220 W3 4000/2	460	600	650	30x M30	610	680	735	24x 33	850
GFT 220 W3 6000/1	460	600	650	30x M30	610	680	735	24x 33	850
GFT 220 W3 6000/2	460	600	650	30x M30	610	680	735	24x 33	850
GFT 330 W3 9000/1	580	680	735	28x M24	660	730	785	30x 33	925
GFT 330 W3 9000/2	580	680	735	28x M24	660	730	785	30x 33	925
GFT 450 W4 6000	580	680	735	36x M30	670	750	810	36x 33	-

Type/design GFT-W	L1	L2	L3	L4	L5	L6	L7	A + B		Mass
								C	Co	
				mm				kN		kg
GFT 160 W3 4000	30	168	340	538	65	131,7	20,2	783	1557	680
GFT 220 W3 4000/1	25	170	350	565	60	155	35	710	1560	820
GFT 220 W3 4000/2	21	170	350	560	60	155	35	710	1560	820
GFT 220 W3 6000/1	25	170	350	565	60	155	35	710	1560	820
GFT 220 W3 6000/2	25	170	350	560	60	155	35	710	1560	820
GFT 330 W3 9000/1	87	188	430	705	80	190	25	1040	2450	1380
GFT 330 W3 9000/2	20	188	430	705	70	190	25	1040	2450	1380
GFT 450 W4 6000	87	156	532	775	37	155	39	1040	2450	1460

Standard counter bearing

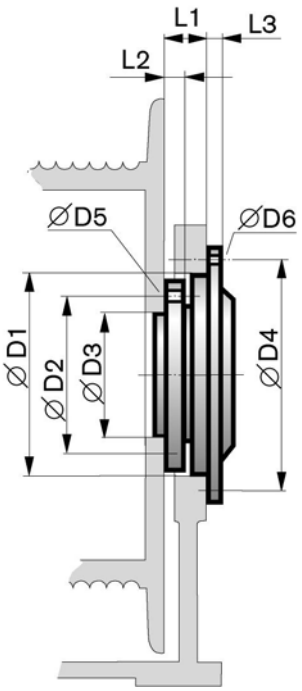

Gearbox size	D1 H7/j6	D2	D3 H7/j6	D4	D5
			mm		
GFT 17 W	140	115	90	157	12x ø14
GFT 24 W	175	145	115	198	12x ø18
GFT 26 W	175	145	115	198	12x ø18
GFT 36 W	200	170	140	230	12x ø18
GFT 40 W	200	170	140	230	12x ø18
GFT 50 W	225	190	150	260	12x ø22
GFT 60 W	225	190	150	260	12x ø22
GFT 80 W	225	190	150	260	12x ø22
GFT 110 W	260	220	180	295	12x ø22
GFT 160 W	260	220	180	295	12x ø22
GFT 220 W	260	220	180	295	12x ø22
GFT 330 W	Dimensions upon request				

Gearbox size	D6	L1	L2	L3	Mass approx.
		mm			kg
GFT 17 W	6x ø9	76	13	10	9
GFT 24 W	6x ø11	76	20	15	15
GFT 26 W	6x ø11	76	20	15	15
GFT 36 W	6x ø14	77	20	15	21
GFT 40 W	6x ø14	77	20	15	21
GFT 50 W	6x ø18	91	25	17	30
GFT 60 W	6x ø18	91	25	17	30
GFT 80 W	6x ø18	91	25	17	30
GFT 110 W	8x ø18	102	25	20	30
GFT 160 W	8x ø18	102	25	20	30
GFT 220 W	8x ø18	102	25	20	30
GFT 330 W	Dimensions upon request				

Customer specification winch drive application

You wish to receive an offer for the winch drives MOBILEX GFT-W

Company: _____
Name/Dept: _____
Place: _____
Phone: _____
E-mail: _____
Date: _____

Please enclose existing drawings, diagrams, comments and the like.

Page 1/3

Operating data / design

(all values based on the 1. rope layer)
It is mandatory to fill out all fields!
For exceptions see footnotes.

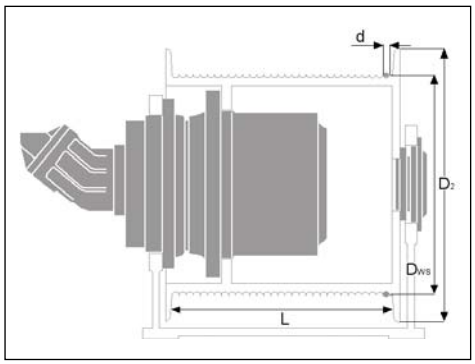

Standard scope of supply
Transmission unit

Optional scope of supply
☐ Counter bearing
☐ Rope drum [3]
☐ Winch frame

Type of device

☐ Hoisting winch ☐ Boom hoist winch ☐ Auxiliary winch
☐ Pulling winch ☐ Other: _____

Rating acc. to FEM section I	T _____ L _____ M _____		
or alternative load spectrum		_____	
Ambient temperature from/to		_____	°C
Operating machine weight [1]		_____	t
Lifting capacity, max. [1]		_____	t
Rope pull (top rope layer) [2]	F	_____	N
Rope speed (1. rope layer) [2]	V_1	_____	m/min
Rope speed (top rope layer) [2]	V_2	_____	m/min
Rope diameter	d	_____	mm
Type of rope groove [3]	☐ grooveless ☐ DIN ☐ Lebus		
Rope groove pitch [3]	p	_____	mm
Drum lead [3]	☐ right ☐ left		
Number of rope layers, max. [2]		_____	
Winding diam. (1. rope layer) [2]	D_{WS}	_____	mm
Winding diam. (top rope layer) [2]	D_{Wx}	_____	mm
Diameter of drum flanges [3]	D_2	_____	mm
Length between drum flanges [3]	L	_____	mm
Rope drum capacity incl. 3 safety turns [3]		_____	m

Techn. data gearbox

Selected gearbox type	GFT-W	_____	
Max. output torque [2]	$T_{2\,max}$	_____	kNm
Max. drive speed [2]	n_2	_____	rpm
Ratio [1]	i	_____	
Multiple-disk parking brake	☐ yes ☐ no		
Min. park. torque multiple-disk parking brake		_____	Nm
Release pressure, max.	P_{max}	_____	bar
Release pressure, min [1]	P_{min}	_____	bar
Top coat specific	☐ yes ☐ no		
Color	RAL	_____	

[1] Optional entry
[2] Mandatory field $T_{2\,max}$ is not specified
[3] Mandatory field in case of delivery with rope drum

You wish to receive an offer for the winch drives MOBILEX GFT-W

Company: _____
Name/Dept: _____
Place: _____
Phone: _____
E-mail: _____
Date: _____

Please enclose existing drawings, diagrams, comments and the like.

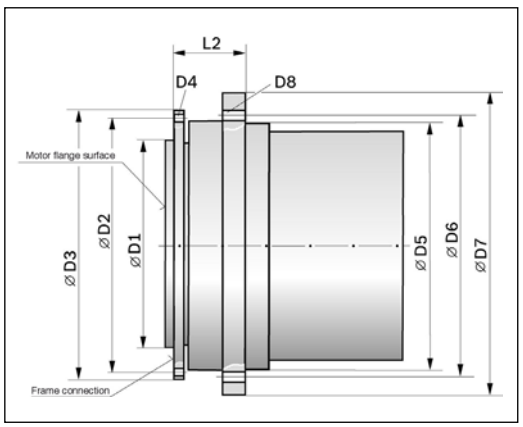

Dimensions of gearbox

- Please fill out the table with the available standard dimensions from valid "Technical data sheet", or if possible the SAP material number of a reference gearbox.
- Please mark the deviating requirements/dimensionsin the table.

Material no. reference		_____
D1		_____ mm
D2		_____ mm
D3		_____ mm
D4	No. of threads	___ pcs. _____
D5		_____ mm
D6		_____ mm
D7		_____ mm
D8	No. of threads	___ pcs. _____
L2		_____ mm

Technical basic data hydraulic motor

Hydraulic circuit	☐ open ☐ closed
Motor type code	_____
Displacement	$V_{g\ min}$ _____ cm^3
Displacement	$V_{g\ max}$ _____ cm^3
Flushing valve	☐ yes ☐ no
Speed sensor, if yes: type	☐ yes, type _____ ☐ no
Counter balance valve	☐ yes ☐ no
Pressure relief valve	☐ yes ☐ no
Pressure relief valve setting	_____ bar
Working pressure	Δp _____ bar
Input flow, max.	$q_{v\ max}$ _____ l/min

Estimated number of transmission units per year [1)] _____
Price range [1)] _____
Requested ship date RSD [1)] _____
Special application conditions _____
Further customer-specific requirements _____
Are there any legal requirements and/or other standards to be considered?
☐ yes ☐ no if yes, please specify _____

[1)] Optional entry

You wish to receive an offer for the winch drives MOBILEX GFT-W

Please enclose existing drawings, diagrams, comments and the like..

Company: _____
Name/Dept: _____
Place: _____
Phone: _____
E-mail: _____
Date: _____

Other (e.g. load spectra, application-relevant data, customer drawings, nameplate):

Notes

Notes

Product range

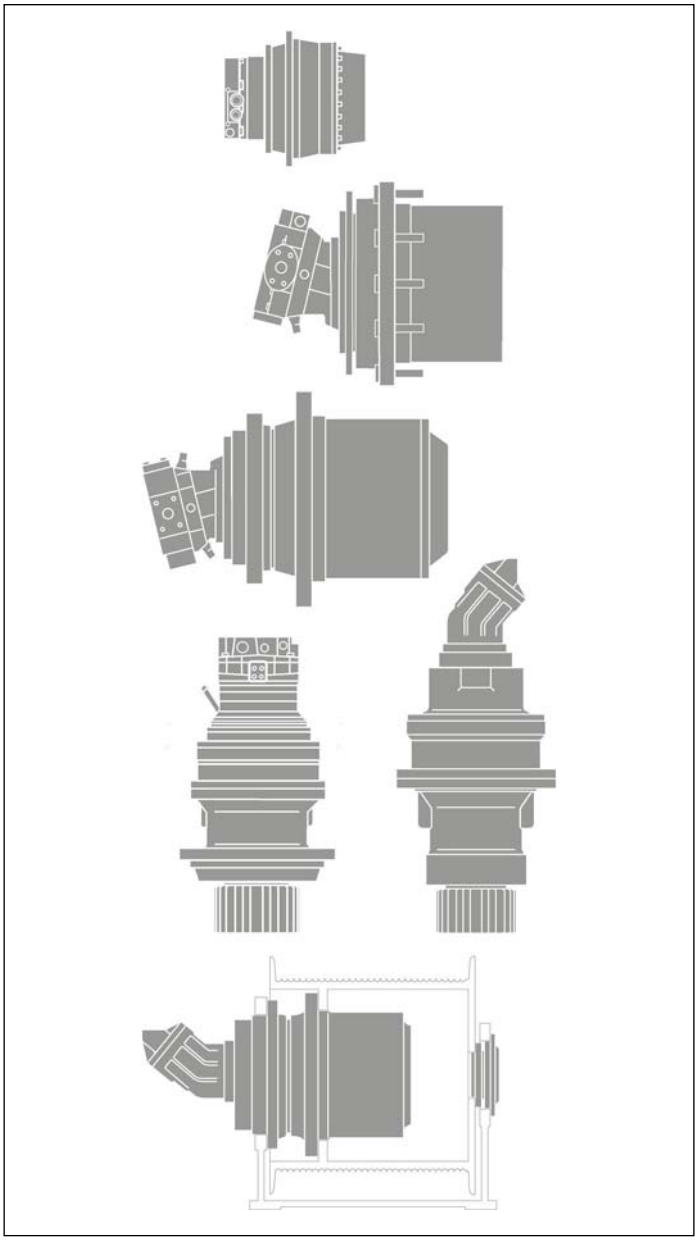

Planetary gearboxes for mobile units

Hydrostatic travel drives

- HYDROTRAC GFT
  For fixed- or variable-displacement motors
  Output torques between 9,5 and 580 kNm
  Data sheet RE 77110
- HYDROTRAC GFT 2000
  Series 30
  Output torques between 13,5 and 42,5 kNm
  Data sheet RE 77116
- HYDROTRAC GFT 8000
  Series 30
  Output torques between 20 and 30 kNm
  Data sheet RE 77128
- HYDROTRAC GFT 8000
  Series 40
  Output torques between 10 and 130 kNm
  Data sheet RE 77117
- HYDROTRAC GFT 45 T2/T3
  Output torques max. 45 kNm
  Data sheet RE 77115

Hydrostatic swing drives

- MOBILEX GFB
  For fixed- or variable-displacement motors
  Output torques between 4 and 68,3 kNm
  Data sheet RE 77201
- MOBILEX GFB 2000
  Series 20
  Output torques between 4 and 14,5 kNm
  Data sheet RE 77206

Hydrostatic winch gears

- MOBILEX GFT-W
  For fixed- or variable-displacement motors
  Output torques between 14 and 325 kNm
  Data sheet RE 77502

По вопросам продаж и поддержки обращайтесь:

Алматы (7273)495-231
Архангельск (8182)63-90-72
Астрахань (8512)99-46-04
Барнаул (3852)73-04-60
Белгород (4722)40-23-64
Брянск (4832)59-03-52
Владивосток (423)249-28-31
Волгоград (844)278-03-48
Вологда (8172)26-41-59
Воронеж (473)204-51-73
Екатеринбург (343)384-55-89
Иваново (4932)77-34-06
Ижевск (3412)26-03-58
Иркутск (395)279-98-46
Казань (843)206-01-48
Калининград (4012)72-03-81
Калуга (4842)92-23-67
Кемерово (3842)65-04-62
Киров (8332)68-02-04
Краснодар (861)203-40-90
Красноярск (391)204-63-61
Курск (4712)77-13-04
Липецк (4742)52-20-81
Магнитогорск (3519)55-03-13
Москва (495)268-04-70
Мурманск (8152)59-64-93
Набережные Челны (8552)20-53-41
Нижний Новгород (831)429-08-12
Новокузнецк (3843)20-46-81
Новосибирск (383)227-86-73
Омск (3812)21-46-40
Орел (4862)44-53-42
Оренбург (3532)37-68-04
Пенза (8412)22-31-16
Пермь (342)205-81-47
Ростов-на-Дону (863)308-18-15
Рязань (4912)46-61-64
Самара (846)206-03-16
Санкт-Петербург (812)309-46-40
Саратов (845)249-38-78
Севастополь (8692)22-31-93
Симферополь (3652)67-13-56
Смоленск (4812)29-41-54
Сочи (862)225-72-31
Ставрополь (8652)20-65-13
Сургут (3462)77-98-35
Тверь (4822)63-31-35
Томск (3822)98-41-53
Тула (4872)74-02-29
Тюмень (3452)66-21-18
Ульяновск (8422)24-23-59
Уфа (347)229-48-12
Хабаровск (4212)92-98-04
Челябинск (351)202-03-61
Череповец (8202)49-02-64
Ярославль (4852)69-52-93

Россия (495)268-04-70
Киргизия (996)312-96-26-47
Казахстан (7172)727-132

rhx@nt-rt.ru || https://rexroth.nt-rt.ru/