Компактные гидравлические системы

Технические характеристики

По вопросам продаж и поддержки обращайтесь:

Алматы (7273)495-231
Архангельск (8182)63-90-72
Астрахань (8512)99-46-04
Барнаул (3852)73-04-60
Белгород (4722)40-23-64
Брянск (4832)59-03-52
Владивосток (423)249-28-31
Волгоград (844)278-03-48
Вологда (8172)26-41-59
Воронеж (473)204-51-73
Екатеринбург (343)384-55-89
Иваново (4932)77-34-06
Ижевск (3412)26-03-58
Иркутск (395)279-98-46
Казань (843)206-01-48
Калининград (4012)72-03-81
Калуга (4842)92-23-67
Кемерово (3842)65-04-62
Киров (8332)68-02-04
Краснодар (861)203-40-90
Красноярск (391)204-63-61
Курск (4712)77-13-04
Липецк (4742)52-20-81
Магнитогорск (3519)55-03-13
Москва (495)268-04-70
Мурманск (8152)59-64-93
Набережные Челны (8552)20-53-41
Нижний Новгород (831)429-08-12
Новокузнецк (3843)20-46-81
Новосибирск (383)227-86-73
Омск (3812)21-46-40
Орел (4862)44-53-42
Оренбург (3532)37-68-04
Пенза (8412)22-31-16
Пермь (342)205-81-47
Ростов-на-Дону (863)308-18-15
Рязань (4912)46-61-64
Самара (846)206-03-16
Санкт-Петербург (812)309-46-40
Саратов (845)249-38-78
Севастополь (8692)22-31-93
Симферополь (3652)67-13-56
Смоленск (4812)29-41-54
Сочи (862)225-72-31
Ставрополь (8652)20-65-13
Сургут (3462)77-98-35
Тверь (4822)63-31-35
Томск (3822)98-41-53
Тула (4872)74-02-29
Тюмень (3452)66-21-18
Ульяновск (8422)24-23-59
Уфа (347)229-48-12
Хабаровск (4212)92-98-04
Челябинск (351)202-03-61
Череповец (8202)49-02-64
Ярославль (4852)69-52-93

Россия (495)268-04-70
Киргизия (996)312-96-26-47
Казахстан (7172)727-132

rhx@nt-rt.ru || https://rexroth.nt-rt.ru/

The complete Mobile Hydraulics Catalog from Bosch Rexroth at a glance:

Part 1	Pumps	Axial Piston Pumps, External Gear Pumps, Electrohydraulic Pumps, Gerotor Pumps	RE 90010-01
Part 2	Motors, Gears	Axial Piston Motors, External Gear Motors, Radial Piston Motors, Gears	RE 90010-02
Part 3	Mobile Controls	Control Blocks, Valve Modules, Pilot Control Devices, Power Brake Valves	RE 90010-03
Part 4	Mobile Electronics, Accumulators, Filters	Controllers, Application Software, Tools, Sensors, Displays, Video Cameras, Accumulators, Filters, Oil Measurement Technology	RE 90010-04
Part 5	Compact Hydraulics	Mechanical, Solenoid and Proportional Cartridge Valves, Integrated Circuits	RE 90010-05
Part 6	Compact Hydraulics	Load Holding/Motion Control Valves, Compact Directional Valves, Compact Power Modules	RE 90010-06

Contents

Compact Hydraulics

Load holding/motion control	23	1
Modular directional valves	443	2
Flow diverters	771	3
Special directional valves	887	4
Solenoid valve Cetop 2	937	5
Compact power modules	977	6

Contents

Designation	Page	Chapter
Product Selection Guide: Load holding/motion control	5	
Load holding/motion control, pilot operated check valves	23	1
Load holding/motion control, counterbalance valves	73	
Load holding/motion control, counterbalance valves with regenerative function	171	
Load holding/motion control, valves for motors: dual cross over relief	187	
Load holding/motion control, valves for motors: single counterbalance with brake release port	207	
Load holding/motion control, valves for motors: dual counterbalance with brake release port	227	
Load holding/motion control, valves for motors: motion control	249	
Load holding/motion control, load lowering and relief valves	277	
Load holding/motion control, check and metering valves	283	
Load holding/motion control, flow regulators	323	
Load holding/motion control, auxiliary valves: pressure reducing	407	
Load holding/motion control, auxiliary valves: sequence	415	
Load holding/motion control, auxiliary valves: shuttle	427	
Load holding/motion control, special valves	431	
Modular directional valves, inlet elements	443	2
Modular directional valves, directional valve elements, EDB series	489	
Modular directional valves, directional valve elements, ED series	523	
Modular directional valves, directional valve elements, EDD series	607	
Modular directional valves, directional valve elements, EDC series (LUDV concept)	619	
Modular directional valves, intermediate elements	667	
Modular directional valves, flangeable elements	691	
Modular directional valves, outlet elements	729	
Modular directional valves, accessories	751	
Flow diverters, 3/2 ways/positions	771	3
Flow diverters, 6/2 ways/positions	797	
Flow diverters, 6 up to 14/2 ways/positions bankable	839	
Flow diverters, 8/2 ways/positions	877	
Special directional valves	887	4
Solenoid valves Cetop 2	937	5
Compact power modules	977	6
Technical data for chapters 1 and 6	1257	
Technical data for chapters 2, 3, 4 and 5	1267	
Code index – Part 6	1275	

The Drive & Control Company

Rexroth
Bosch Group

Load holding / Motion control valves

Product Selection Guide

Summary

	Page
Pilot operated check valves	2
Counterbalance:	
Single configuration	3
Dual configuration	4
Counterbalance with regenerative function	5
Valves for motors:	
Dual cross over relief	6
Single counterbalance with brake release port	7
Dual counterbalance with brake release port	8
Motion control	9
Load lowering and relief valves	10
Check and metering valves	10-11
Flow regulators	12-14
Auxiliary valves:	
Pressure reducing	15
Sequence	15-16
Shuttle	16
Special Valves	16-17

Pilot operated Check

Standard configuration

Symbol	Type	Code	Max. Pressure bar (psi)	Max. Flow l/min. (gpm)	Ports size	Data Sheet	Page
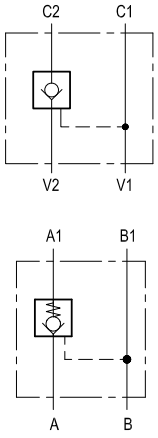	VSO-SE	055279XYZ	210 (3000)	30 (8)	G 3/8	18307-01	25
	VSO-SE	055201X03Z	210 (3000)	50 (13)	G 1/2	18307-02	27
	VSO-SE	055201X04Z	210 (3000)	100 (26)	G 3/4	18307-03	29
	VSO-SE-FC1	055286XYZ	210 (3000)	30 (8)	Flangeable	18307-04	31
	VSO-SE-FC1	055202XYZ	210 (3000)	50 (8)	Flangeable	18307-05	33
	VSO-SE-DL	055211X09Z	210 (3000)	20 (5)	G 1/4	18307-06	35
	VSO-SE-DL	055211X02Z	210 (3000)	20 (5)	G 3/8	18307-07	37
	VSO-SE-DL	055211X03Z	210 (3000)	50 (13)	G 1/2	18307-08	39
	VSO-SE-DL-FCV	055239XYZ	210 (3000)	30 (8)	G 3/8	18307-09	41
	A-VSO-SE-LB	085291XYZ	350 (5000)	20 (5)	G 1/4	18307-10	43

Vented pilot piston

Symbol	Type	Code	Max. Pressure bar (psi)	Max. Flow l/min. (gpm)	Ports size	Data Sheet	Page
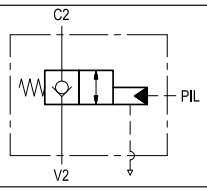	VSO-SE-PS	055224XYZ	210 (3000)	30 (8)	G 3/8	18307-11	45

Manual shut-off

Symbol	Type	Code	Max. Pressure bar (psi)	Max. Flow l/min. (gpm)	Ports size	Data Sheet	Page
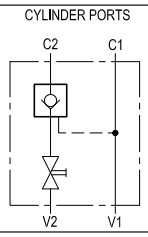	VSO-SE-DL-SX	055226XYZ	210 (3000)	up to 60 (16)	G 3/8 - G 1/2	18307-12	47
	VSO-SE-DL-DX	055227XYZ	210 (3000)	up to 60 (16)	G 3/8 - G 1/2	18307-13	49
	VSO-SE-DL-FCV-SX	0552KXYZ	210 (3000)	30 (8)	G 3/8	18307-14	51
	VSO-SE-DL-FCV-DX	0552KXYZ	210 (3000)	30 (8)	G 3/8	18307-15	53

Dual, standard configuration

Symbol	Type	Code	Max. Pressure bar (psi)	Max. Flow l/min. (gpm)	Ports size	Data Sheet	Page
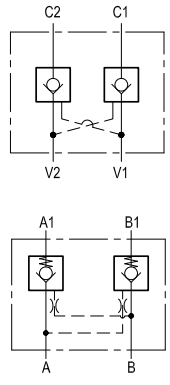	VSO-DE	055343XYZ	210 (3000)	30 (8)	G 3/8	18307-16	55
	VSO-DE	055301X03Z	210 (3000)	50 (13)	G 1/2	18307-17	57
	VSO-DE	055301X04Z	210 (3000)	100 (26)	G 3/4	18307-18	59
	VSO-DE-FC2	055344XYZ	210 (3000)	30 (8)	Flangeable	18307-19	61
	VSO-DE-FC2	055302XYZ	210 (3000)	50 (13)	Flangeable	18307-20	63
	VSO-DE-DL	055303X09Z	350 (5000)	20 (5)	G 1/4	18307-21	65
	VSO-DE-L	055303X02Z	350 (5000)	50 (13)	G 3/8	18307-22	67
	VSO-DE-L	055303X03Z	350 (5000)	50 (13)	G 1/2	18307-23	69
	VSO-DE-LB	085357XYZ	350 (5000)	20 (5)	G 1/4	18307-24	71

Counterbalance

Single, standard configuration

Symbol	Type	Code	Max. Pressure bar (psi)	Max. Flow l/min. (gpm)	Ports size	Data Sheet	Page
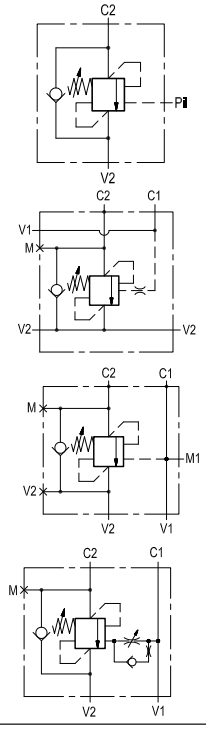	A-VBSO-SE-78	083520XYZ	350 (5000)	40 (11)	G 1/4	18307-34	77
	A-VBSO-SE-78-PL	084985XYZ	350 (5000)	40 (11)	G 1/4	18307-35	79
	A-VBSO-SE-78-PL-FC2	084968XYZ	350 (5000)	40 (11)	Flangeable	18307-36	81
	A-VBSO-SE-30	084101XYZ	350 (5000)	60 (16)	G1/4-G3/8-G1/2	18307-37	83
	A-VBSO-SE-30-FC1	084102XYZ	350 (5000)	40 (11)	Flangeable	18307-38	85
	A-VBSO-SE30-FC1	083962XYZ	410 (5945)	42 (11)	Flangeable	18307-31	89
	A-VBSO-SE-30-PI-PL	083959XYZ	350 (5000)	60 (16)	G 3/8 - G 1/2	18307-32	87
	A-VBSO-SE-30-FC2-PI-PL	083960XYZ	350 (5000)	60 (16)	Flangeable	18307-33	91
	A-VBSO-SE-30-SAF	084772XYZ	350 (5000)	80 (21)	G 1/2	18307-42	93
	A-VBSO-SE-90-PL	083928XYZ	350 (5000)	90 (24)	G 1/2	18308-45	95
	VBSO-SE	054101XYZ	210 (3000)	up to 140 (37)	G 1/2 - G3/4	18307-43	97
	A-VBSO-SE-33-PL	084585XYZ	350 (5000)	150 (40)	G 1/2 - G3/4	18307-44	99
	A-VBSO-SE-33-PL-FC1	084587XYZ	350 (5000)	150 (40)	Flangeable	18307-45	101
	A-VBSO-SE-33-PL-FC2	084594XYZ	350 (5000)	150 (40)	Flangeable	18307-46	103
	A-VBSO-SE-42	083930XYZ	350 (5000)	350 (92)	G 1	18308-46	105

Single, relief compensated

Symbol	Type	Code	Max. Pressure bar (psi)	Max. Flow l/min. (gpm)	Ports size	Data Sheet	Page
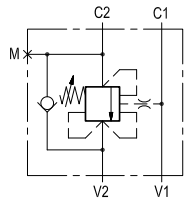	A-VBSO-SE-CC-78	083927XYZ	350 (5000)	40 (11)	G 1/4	18308-44	107
	A-VBSO-SE-CC-30	084396XYZ	350 (5000)	60 (16)	G 3/8 - G 1/2	18307-47	109
	A-VBSO-SE-CC-30-PL	084517XYZ	350 (5000)	60 (16)	G 3/8 - G 1/2	18307-48	111
	A-VBSO-SE-CC-30-PL-FC1	084519XYZ	350 (5000)	60 (16)	Flangeable	18307-49	113
	A-VBSO-SE-CC-30-PL-FC2	084521XYZ	350 (5000)	60 (16)	Flangeable	18307-50	115
	VBSO-SE-CC	054106XYZ	210 (3000)	up to 140 (37)	G 1/2 - G 3/4	18307-51	117

Single, vented

Symbol	Type	Code	Max. Pressure bar (psi)	Max. Flow l/min. (gpm)	Ports size	Data Sheet	Page
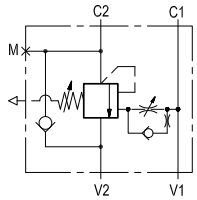	A-VBSO-SE-CCAP-78	084598XYZ	350 (5000)	40 (11)	G 1/4	18308-48	119
	A-VBSO-SE-CCAP-33-PL	084586XYZ	350 (5000)	150 (40)	G 1/2 - G 3/4	18307-52	121
	A-VBSO-SE-CCAP-33-PL-FC1	084588XYZ	350 (5000)	150 (40)	Flangeable	18307-53	123
	A-VBSO-SE-CCAP-33-PL-FC2	084592XYZ	350 (5000)	150 (40)	Flangeable	18307-54	125
	A-VBSO-SE-CCAP-42	084991XYZ	350 (5000)	350 (92)	G 1	18308-47	127

Counterbalance

Dual, standard configuration

Symbol	Type	Code	Max. Pressure bar (psi)	Max. Flow l/min. (gpm)	Ports size	Data Sheet	Page
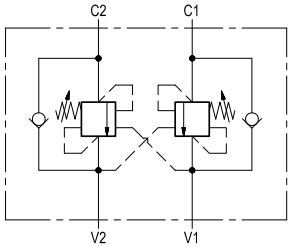	A-VBSO-DE-78	084611XYZ	350 (5000)	40 (11)	G 1/4	18307-55	129
	A-VBSO-DE-78-FC2	084636XYZ	350 (5000)	40 (11)	Flangeable	18307-56	131
	VBSO-DE-NN	054247XYZ	210 (3000)	40 (11)	G 3/8	18307-57	133
	VBSO-DE-NN-FC2	054248XYZ	210 (3000)	40 (11)	Flangeable	18307-58	135
	A-VBSO-DE-30-PI	084811XYZ	350 (5000)	60 (16)	G 3/8 - G 1/2	18307-72	137
	A-VBSO-DE-30-FC1	084430XYZ	350 (5000)	60 (16)	Flangeable	18307-60	139
	A-VBSO-DE-30-FCB-PI	084812XYZ	350 (5000)	60 (16)	Flangeable	18307-73	141
	A-VBSO-DE-SAF	084460XYZ	350 (5000)	80 (21)	G 1/2	18307-62	143
	A-VBSO-DE-90-FC2	084489XYZ	350 (5000)	90 (24)	Flangeable	18308-63	145
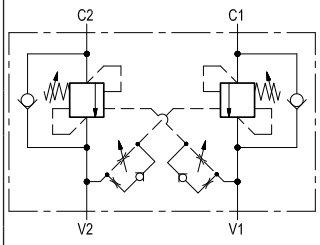	VBSO-DE	054201XYZ	210 (3000)	140 (37)	G 1/2 - G 3/4	18307-63	147
	VBSO-DE-FC2	054206XYZ	210 (3000)	up to 140 (37)	Flangeable	18307-64	149
	VBSO-DE-33	054432XYZ	210 (3000)	150 (40)	G 1/2 - G 3/4	18307-65	151
	VBSO-DE-33	05443213YZ	210 (3000)	150 (40)	G 1/2 - G 3/4	18308-65	153
	VBSO-DE-33-FC2	054433XYZ	210 (3000)	150 (40)	Flangeable	18307-66	155
	A-VBSO-DE33-FC2	084433XYZ	410 (5945)	150 (40)	Flangeable	18308-04	157

Dual, relief compensated

Symbol	Type	Code	Max. Pressure bar (psi)	Max. Flow l/min. (gpm)	Ports size	Data Sheet	Page
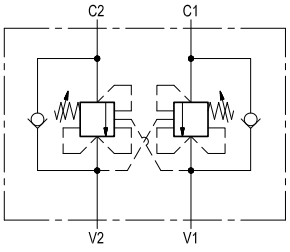	A-VBSO-DE-CC-30	084404XYZ	350 (5000)	60 (16)	G 3/8 - G 1/2	18307-67	159
	VBSO-DE-CC	054205XYZ	210 (3000)	up to 140 (37)	G 1/2 - G 3/4	18307-68	161
	A-VBSO-DE-CC	084205XYZ	350 (5000)	140 (37)	G 3/4	18307-69	163

Dual, vented

Symbol	Type	Code	Max. Pressure bar (psi)	Max. Flow l/min. (gpm)	Ports size	Data Sheet	Page
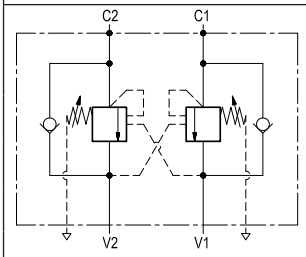	A-VBSO-DE-CCAP-78-FC2	084431XYZ	350 (5000)	40 (11)	Flangeable	18308-64	165
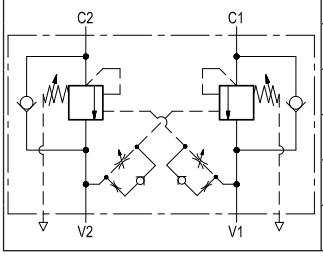	A-VBSO-DE-CCAP-33	084494XYZ	350 (5000)	150 (40)	G 3/4	18307-70	167
	VBSO-DE-CCAP-33-FC2	054431XYZ	210 (3000)	150 (40)	Flangeable	18307-71	169

Counterbalance valves with regenerative function

Dual, standard configuration

Symbol	Type	Code	Max. Pressure bar (psi)	Max. Flow l/min. (gpm)	Ports size	Data Sheet	Page
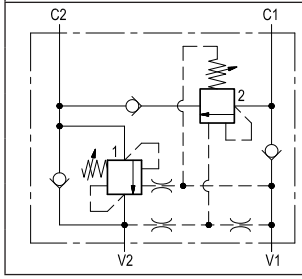	VBSO-DE-CR-78	054458XYZ	210 (3000)	40 (11)	G 3/8	18307-90	173
	VBSO-DE-CR-30	054483XYZ	210 (3000)	60 (16)	G 1/2	18307-91	175
	VBSO-DE-CR-33	054413XYZ	210 (3000)	100 (26)	G 1/2	18307-92	177

Dual, pressure sensitive

Symbol	Type	Code	Max. Pressure bar (psi)	Max. Flow l/min. (gpm)	Ports size	Data Sheet	Page
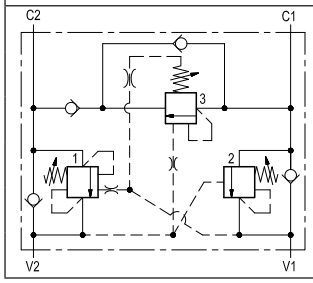	VBSO-DE-CR-EA-33	07062051	210 (3000)	100 (26)	G 1/2	18307-93	179

Dual, solenoid controlled

Symbol	Type	Code	Max. Pressure bar (psi)	Max. Flow l/min. (gpm)	Ports size	Data Sheet	Page
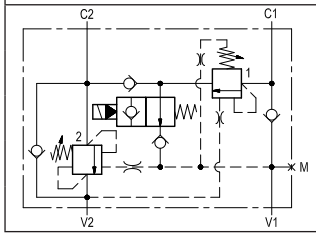	VBSO-DE-CR-EE-33	054481XYZ	210 (3000)	100 (26)	G 3/4	18307-94	181

Dual, pressure controlled

Symbol	Type	Code	Max. Pressure bar (psi)	Max. Flow l/min. (gpm)	Ports size	Data Sheet	Page
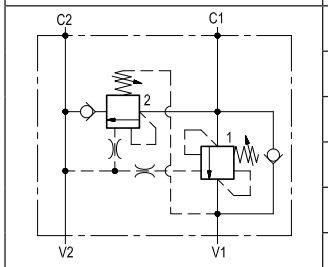	A-VBSO-CR-EA-42	07067399	350 (5000)	220 (58)	Flangeable	18307-95	183
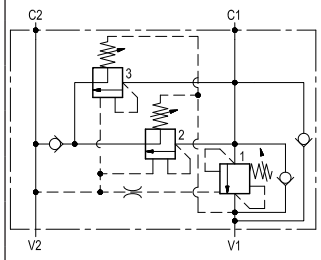	A-VBSO-CR-EA-42	07067030	350 (5000)	400 (106)	Flangeable	18307-96	185

Valves for motors - Dual Cross over relief

Direct acting

Symbol	Type	Code	Max. Pressure bar (psi)	Max. Flow l/min. (gpm)	Ports size	Data Sheet	Page
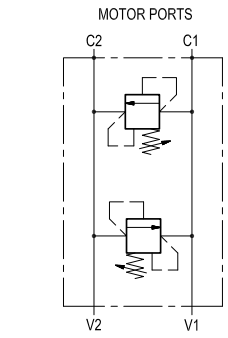	VSDI-30	051603XYZ	210 (3000)	30 (8)	G 3/8 - G 1/2	18308-15	189
	VSDI-30-FM	051633XYZ	210 (3000)	30 (8)	on SAUER-DANFOSS OMP-OMR series	18308-16	191
	VSDI-30-FM	051617XYZ	210 (3000)	30 (8)	on SAUER-DANFOSS OMS series	18308-17	193
	VSDI-80	051601XYZ	210 (3000)	80 (21)	G 1/2 - G 3/4	18308-19	197

Direct acting with anti-cavitation check valves

Symbol	Type	Code	Max. Pressure bar (psi)	Max. Flow l/min. (gpm)	Ports size	Data Sheet	Page
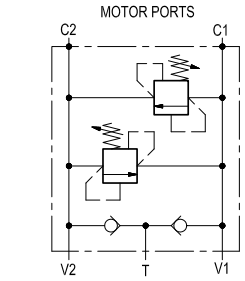	VSDI-VA-30-FM	051648XYZ	210 (3000)	30 (8)	on SAUER-DANFOSS OMS series	18308-18	195
	VSDI-VA-80	051605XYZ	210 (3000)	80 (8)	G 1/2 - G 3/4	18308-20	199
	VSDI-VA-80-FM	051615XYZ	210 (3000)	80 (8)	on REXROTH motors A2FE-28-32 series	18308-21	201

Pilot operated with anti-cavitation check valves

Symbol	Type	Code	Max. Pressure bar (psi)	Max. Flow l/min. (gpm)	Ports size	Data Sheet	Page
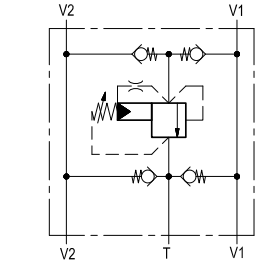	A-VAA-CC-150	088111XYZ	350 (5000)	150 (40)	G 1/2 - G 3/4 - G 1	18308-24	203
	A-VAA-CC-42-FM	088116XYZ	350 (5000)	200 (53)	on REXROTH motors A2FE-45-56-63 series	18308-25	205

Valves for motors - Single counterbalance with brake release port

In-line

Symbol	Type	Code	Max. Pressure bar (psi)	Max. Flow l/min. (gpm)	Ports size	Data Sheet	Page
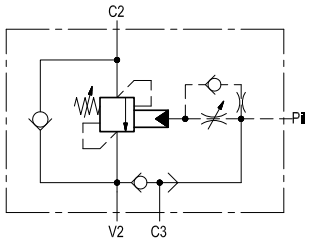	A-VBSO-SE-LA-33	083769XYZ	350 (5000)	150 (40)	G 1/2 - G 3/4	18308-35	209
	A-VBSO-SE-LA-42	083770XYZ	350 (5000)	350 (93)	G 3/4 - G 1	18308-36	211

Flangeable to motor

Symbol	Type	Code	Max. Pressure bar (psi)	Max. Flow l/min. (gpm)	Ports size	Data Sheet	Page
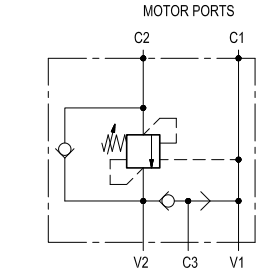	VBSO-SE-FA-30	054570XYZ	210 (3000)	60 (16)	on SAUER-DANFOSS OMP-OMR series	18308-37	213
	VBSO-SE-FA-30	054571XYZ	210 (3000)	60 (16)	on SAUER-DANFOSS OMS series	18308-38	215
	VBSO-SE-FA-33	054981XYZ	210 (3000)	170 (45)	on REXROTH motors A2FE-45-56-63	18308-39	217
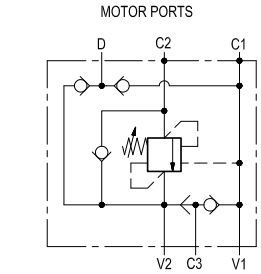	VBSO-SE-FA-RD-30	054524XYZ	210 (3000)	60 (16)	on SAUER-DANFOSS OMP-OMR series	18308-40	219
	VBSO-SE-FA-RD-90	053501XYZ	210 (3000)	90 (24)	on SAUER-DANFOSS OMS-OMSW-OMSS series	18308-41	221
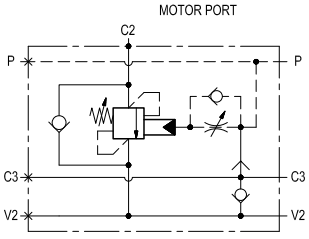	A-VBSO-SE-FA-42	084538XYZ	350 (5000)	350 (93)	SAE 6000	18308-42	223
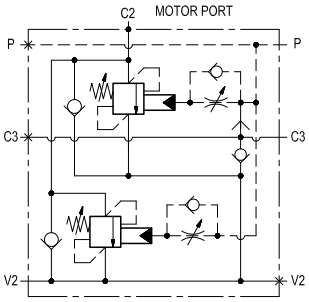	A-VBSO-SE-FA-42	084539XYZ	350 (5000)	550 (145)	SAE 6000	18308-43	225

Valves for motors - Dual counterbalance

Standard configuration with brake release port

Symbol	Type	Code	Max. Pressure bar (psi)	Max. Flow l/min. (gpm)	Ports size	Data Sheet	Page
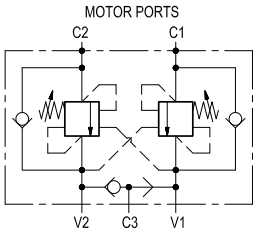	A-VBSO-DE-VF-30	084410XYZ	350 (5000)	60 (16)	G 3/8 - G 1/2	18308-53	229
	VBSO-DE-VF-30-FM	060208052	210 (3000)	60 (16)	on REXROTH motors A2FE-28-32 series	18308-54	231
	VBSO-DE-VF-30-VSDI-FM	060301X	210 (3000)	60 (16)	on SAUER-DANFOSS OMP-OMR series	18308-55	233
	VBSO-DE-VF-30-FM	060301X	210 (3000)	60 (16)	on SAUER-DANFOSS OMS series	18308-56	235

With brake release port and dual cross over relief

Symbol	Type	Code	Max. Pressure bar (psi)	Max. Flow l/min. (gpm)	Ports size	Data Sheet	Page
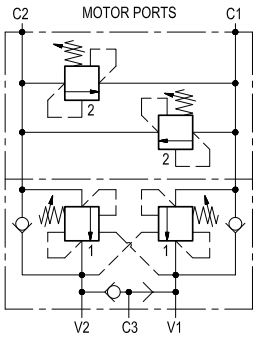	VBSO-DE-VF-30-VSDI-FM	060301X	210 (3000)	60 (16)	on SAUER-DANFOSS OMP-OMR series	18308-57	237
	VBSO-DE-VF-30-VSDI-FM	060301X	210 (3000)	60 (16)	on SAUER-DANFOSS OMS series	18308-58	239

With pressure reducer for brake release port

Symbol	Type	Code	Max. Pressure bar (psi)	Max. Flow l/min. (gpm)	Ports size	Data Sheet	Page
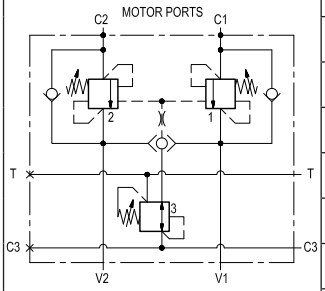	VBSO-DE-VF-30-FM	060208061	210 (3000)	60 (16)	on REXROTH motors A2FE-28-32 series	18308-59	241
	A-VBSN-DE-VF-12A-FM	084635XYZ	350 (5000)	120 (32)	on REXROTH motors A2FE-45-56-63 series	18308-60	243
	A-VBSN-DE-VF-20A-FM	084632XYZ	350 (5000)	320 (85)	on REXROTH motors A2FE-80-90 series	18308-61	245
	A-VBSN-DE-VF-20A-FM	084633XYZ	350 (5000)	320 (85)	on REXROTH motors A2FE-107-125 series	18308-62	247

Valves for motors - Motion control

Standard configuration

Symbol	Type	Code	Max. Pressure bar (psi)	Max. Flow l/min. (gpm)	Ports size	Data Sheet	Page
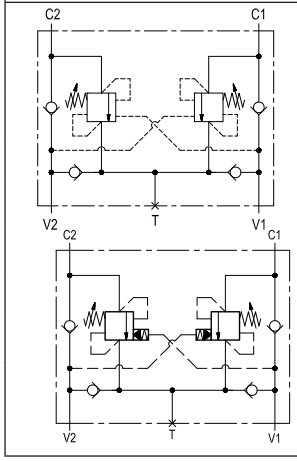	VAA-B-SIC50-38	057109X02Z	210 (3000)	40 (11)	G 3/8	18308-85	251
	VAA-B-SICN-ST-50	057144X02Z	210 (3000)	40 (11)	G 3/8	18308-72	253
	VAA-B-SICN-ST-150	057144X04Z	210 (3000)	120 (32)	G 3/4	18308-73	255
	VAA-B-SICN-ST-250	057144X05Z	210 (3000)	200 (53)	G 1	18308-74	257

With brake release port

Symbol	Type	Code	Max. Pressure bar (psi)	Max. Flow l/min. (gpm)	Ports size	Data Sheet	Page
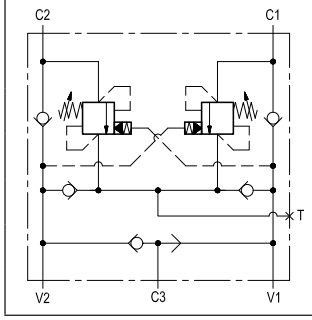	VAA-B-SICN-ST-VF-50	057145X02Z	210 (3000)	40 (11)	G 3/8	18308-75	259
	VAA-B-SICN-ST-VF-150	057145X04Z	210 (3000)	120 (32)	G 3/4	18308-76	261
	VAA-B-SICN-ST-VF-250	057145X05Z	210 (3000)	200 (53)	G 1	18308-77	263

Dual setting

Symbol	Type	Code	Max. Pressure bar (psi)	Max. Flow l/min. (gpm)	Ports size	Data Sheet	Page
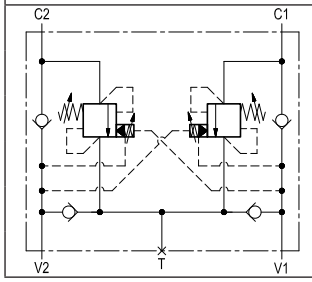	VAA-B-SICN-PDRM-50	057146X02Z	210 (3000)	40 (11)	G 3/8	18308-78	265
	VAA-B-SICN-PDRM-150	057146X04Z	210 (3000)	120 (32)	G 3/4	18308-79	267
	VAA-B-SICN-PDRM-250	057146X05Z	210 (3000)	200 (53)	G 1	18308-80	269

Dual setting with brake release port

Symbol	Type	Code	Max. Pressure bar (psi)	Max. Flow l/min. (gpm)	Ports size	Data Sheet	Page
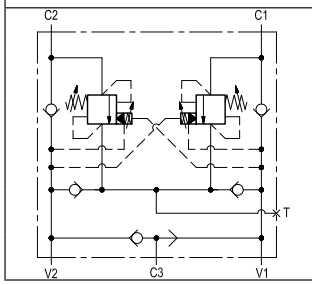	VAA-B-SICN-PDRM-VF-50	057147X02Z	210 (3000)	40 (11)	G 3/8	18308-81	271
	VAA-B-SICN-PDRM-VF-150	057147X04Z	210 (3000)	120 (32)	G 3/4	18308-82	273
	VAA-B-SICN-PDRM-VF-250	057147X05Z	210 (3000)	200 (53)	G 1	18308-83	275

Load lowering and relief

In-line

Symbol	Type	Code	Max. Pressure bar (psi)	Max. Flow l/min. (gpm)	Ports size	Data Sheet	Page
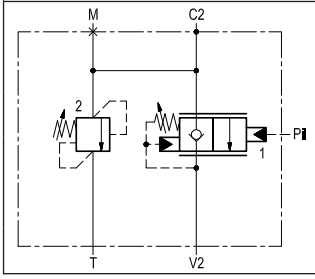	VRBC90-VS30	054975XYZ	210 (3000)	90 (24)	G 1/2	18310-30	279

Flangeable

Symbol	Type	Code	Max. Pressure bar (psi)	Max. Flow l/min. (gpm)	Ports size	Data Sheet	Page
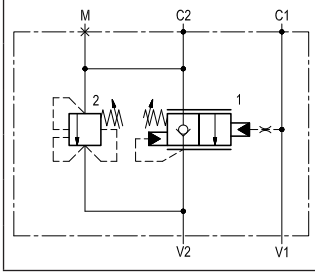	VRBC90-VS30-CC-FC2	053738XYZ	210 (3000)	90 (24)	Flangeable	18310-31	281

Check and metering valves

In-line

Symbol	Type	Code	Max. Pressure bar (psi)	Max. Flow l/min. (gpm)	Ports size	Data Sheet	Page
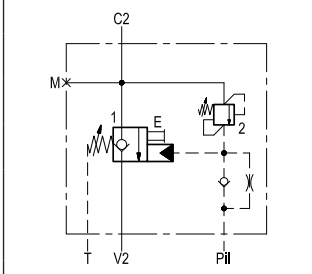	A-VBC-78-DX	084929XYZ	420 (6000)	40 (11)	G 3/8	18309-01	285
	A-VBC-78-SX	084930XYZ	420 (6000)	40 (11)	G 3/8	18309-02	287
	A-VBC-90-DX	084797XYZ	420 (6000)	100 (26)	G 1/2	18309-03	289
	A-VBC-90-SX	084796XYZ	420 (6000)	100 (26)	G 1/2	18309-04	291
	A-VBC-33-DX	084924XYZ	420 (6000)	150 (40)	G 3/4	18309-05	293
	A-VBC-33-SX	084925XYZ	420 (6000)	150 (40)	G 3/4	18309-06	295

Flangeable

Symbol	Type	Code	Max. Pressure bar (psi)	Max. Flow l/min. (gpm)	Ports size	Data Sheet	Page
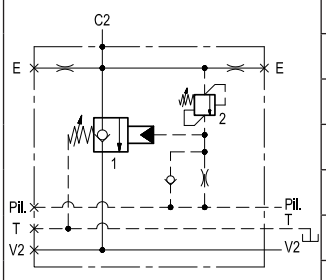	A-VBC-90-FC	084783XYZ	420 (6000)	120 (32)	SAE 6000	18309-07	297
	A-VBC-33-FC	084926XYZ	420 (6000)	150 (40)	SAE 6000	18309-08	299
	A-VBC-33-FC	084784XYZ	420 (6000)	250 (66)	SAE 6000	18309-09	301
	A-VBC-42-FC	084785X72Z	420 (6000)	350 (93)	SAE 6000	18309-10	303
	A-VBC-42-FC	084785X73Z	420 (6000)	400 (106)	SAE 6000	18309-11	305
	A-VBC-42-FC	084785X64Z	420 (6000)	500 (132)	SAE 6000	18309-12	307

Check and metering valves

Flangeable

Symbol	Type	Code	Max. Pressure bar (psi)	Max. Flow l/min. (gpm)	Ports size	Data Sheet	Page
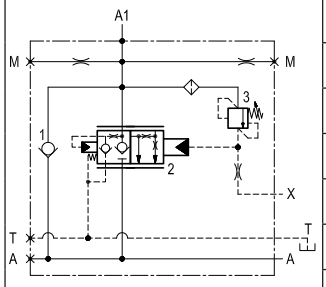	A-VBCN-15-FC	08352307YZ	420 (6000)	200 (53)	SAE 6000	18309-13	309
	A-VBCN-18-FC	08371818YZ	420 (6000)	300 (79)	SAE 6000	18309-14	311

Flangeable with oil recovery

Symbol	Type	Code	Max. Pressure bar (psi)	Max. Flow l/min. (gpm)	Ports size	Data Sheet	Page
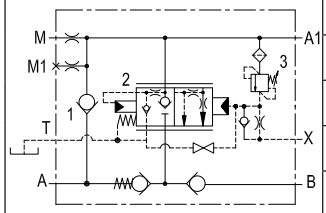	A-VBCN-15-DX-RE-FC	083964XYZ	420 (6000)	200 (53)	SAE 6000	18309-15	313
	A-VBCN-15-SX-RE-FC	083965XYZ	420 (6000)	200 (53)	SAE 6000	18309-16	315
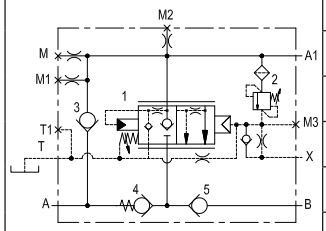	A-VBCN-22-DX-RE-FC	083938XYZ	420 (6000)	400 (106)	SAE 6000	18309-18	317
	A-VBCN-22-SX-RE-FC	083937XYZ	420 (6000)	400 (106)	SAE 6000	18309-17	319

Control Plus

Symbol	Type	Code	Max. Pressure bar (psi)	Max. Flow l/min. (gpm)	Ports size	Data Sheet	Page
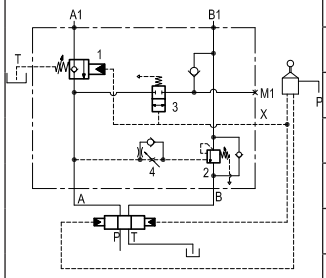	A-VBC14-FC2	083990XYZ	350 (5000)	150 (40)	G 3/4	18308-99	321

Flow regulators

2-way, pressure compensated

Symbol	Type	Code	Max. Pressure bar (psi)	Max. Flow l/min. (gpm)	Ports size	Data Sheet	Page
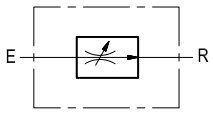	VRFC2	0M2203X97	210 (3000)	20 (5)	G 3/8	18309-32	325
	VRFC2	0M2203XY	210 (3000)	up to 190 (50)	G 3/8 - G 1/2 G 3/4 - G 1	18309-33	327
	VRFC2-L	0M220350Y	210 (3000)	up to 90 (24)	G 3/8 - G 1/2 - G 3/4	18309-34	329
	A-VRFC2	0MB203XY	350 (5000)	up to 190 (50)	G 3/8 - G 1/2 G 3/4 - G 1	18309-35	331

2-way, pressure compensated with check valve for free reverse flow

Symbol	Type	Code	Max. Pressure bar (psi)	Max. Flow l/min. (gpm)	Ports size	Data Sheet	Page
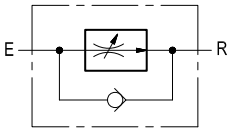	VRFC2-VU	0M2403XY	210 (3000)	up to 190 (50)	G 3/8 - G 1/2 G 3/4 - G 1	18309-36	333

2-way, pressure compensated

Symbol	Type	Code	Max. Pressure bar (psi)	Max. Flow l/min. (gpm)	Ports size	Data Sheet	Page
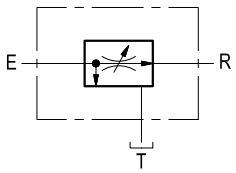	VRFC3	0M3203X97	210 (3000)	25 (7)	G 3/8	18309-37	335
	VRFC3	0M3203XY	210 (3000)	up to 90 (24)	G 3/8 - G 1/2 - G 3/4	18309-38	337
	VRFC3	0M3203X05	210 (3000)	190 (50)	G 1	18309-39	339
	VRFC3-L	0M320350Y	210 (3000)	up to 90 (24)	G 3/8 - G 1/2 - G 3/4	18309-40	341
	A-VRFC3	0MC203XY	350 (5000)	up to 90 (24)	G 1/2 - G 3/4	18309-41	343
	A-VRFC3	0MC203X05	350 (5000)	190 (50)	G 1	18309-42	345

3-way, pressure compensated with check valve for free reserve flow

Symbol	Type	Code	Max. Pressure bar (psi)	Max. Flow l/min. (gpm)	Ports size	Data Sheet	Page
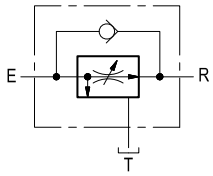	VRFC3-VU	0M3903XY	210 (3000)	up to 55 (15)	G 3/8 - G 1/2	18309-43	347
	VRFC3-VU	0M3903X04	210 (3000)	90 (24)	G 3/4	18309-44	349

Flow regulators

3-way, pressure compensated with relief

Symbol	Type	Code	Max. Pressure bar (psi)	Max. Flow l/min. (gpm)	Ports size	Data Sheet	Page
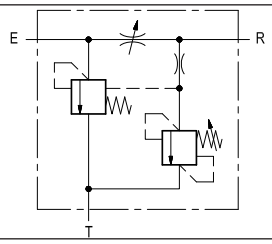	VRFC3-VS	0M3303XY	210 (3000)	up to 190 (50)	G 3/8 - G 1/2 G 3/4 - G 1	18309-45	351
	VRFC3-VS	0M330350Y	210 (3000)	up to 90 (24)	G 3/8 - G 1/2 - G 3/4	18309-46	353

3-way, pressure compensated with relief and solenoid control

Symbol	Type	Code	Max. Pressure bar (psi)	Max. Flow l/min. (gpm)	Ports size	Data Sheet	Page
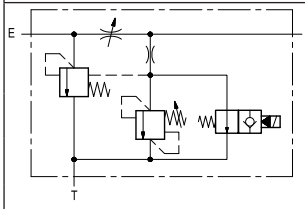	VRFC3-VS-VEI	0M3603XY	210 (3000)	up to 190 (50)	G 1/2 - G 3/4 - G1	18309-47	355

3-way, pressure compensated with relief and solenoid by-pass

Symbol	Type	Code	Max. Pressure bar (psi)	Max. Flow l/min. (gpm)	Ports size	Data Sheet	Page
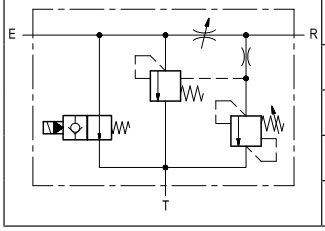	VRFC3-VS-BPE	0M3803XY	210 (3000)	up to 55 (15)	G 3/8 - G 1/2	18309-48	357
	VRFC3-VS-BPE	0M3803X04	210 (3000)	up to 90 (24)	G 3/4	18309-49	359

3-way, combination type, pressure compensated

Symbol	Type	Code	Max. Pressure bar (psi)	Max. Flow l/min. (gpm)	Ports size	Data Sheet	Page
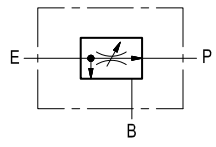	VRFC3C	0M4203XY	210 (3000)	up to 190 (50)	G 3/8 - G 1/2 G 3/4 - G 1	18309-50	361
	A-VRFC3C	0MD203XY	350 (5000)	up to 190 (50)	G 3/4 - G 1	18309-51	363
	VRFC3C	0M420350Y	210 (3000)	up to 90 (24)	G 3/8 - G 1/2 - G 3/4	18309-52	365

3-way, heavy duty flow control, with pressure compensated and solenoid controlled priority flow

Symbol	Type	Code	Max. Pressure bar (psi)	Max. Flow l/min. (gpm)	Ports size	Data Sheet	Page
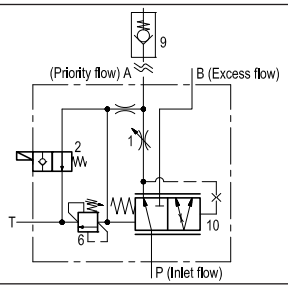	A-VRFC3C-VEI-VS	0M432080YZ	350 (5000)	up to 300 (80)	G 1/2 - G 3/4 G 1 - G 1 1/4	18309-53	367

Flow regulators

5-way, heavy duty flow control, with pressure compensated and solenoid controlled priority flow for two pumps systems

Symbol	Type	Code	Max. Pressure bar (psi)	Max. Flow l/min. (gpm)	Ports size	Data Sheet	Page
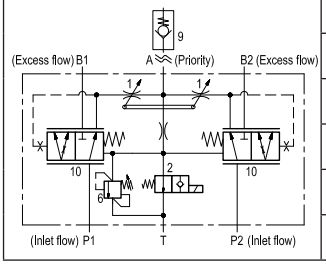	A-VRFC3C-VEI-VS	0M431280YZ	350 (5000)	up to 390 (103)	G 1/2 - G 3/4 - G 1	18309-54	373

3-way, heavy duty flow control, with pressure compensated, solenoid and load sensing controlled priority flow

Symbol	Type	Code	Max. Pressure bar (psi)	Max. Flow l/min. (gpm)	Ports size	Data Sheet	Page
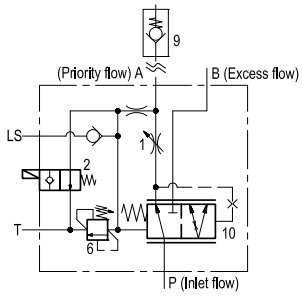	A-VRFC3C-VEI-VS-LS	0M432180YZ	350 (5000)	140 (37)	1 1/16-12 UN-2B	18309-63	379

2-way, heavy duty flow control, with pressure compensated, solenoid and load sensing controlled priority flow

Symbol	Type	Code	Max. Pressure bar (psi)	Max. Flow l/min. (gpm)	Ports size	Data Sheet	Page
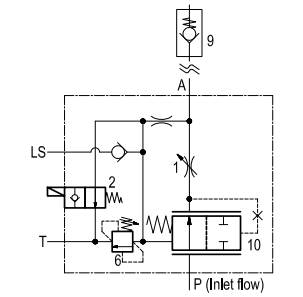	A-VRFC2C-VEI-VS-LS	0M280380YZ	350 (5000)	140 (37)	1 1/16-12 UN-2B	18309-64	385

Flow dividers, combiners

Symbol	Type	Code	Max. Pressure bar (psi)	Max. Flow l/min. (gpm)	Ports size	Data Sheet	Page
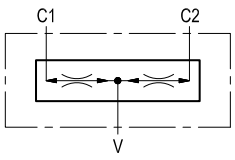	DRF	0M51039002Z	210 (3000)	up to 38 (10)	G 3/8	18309-55	391
	DRF	0M51039003Z	210 (3000)	up to 38 (10)	G 1/2 - G 3/8	18309-56	393
	DRF	0M51039004Z	210 (3000)	up to 150 (40)	G 3/4 - G 1/2	18309-57	395
	DRF	0M51039005Z	210 (3000)	up to 150 (40)	G 3/4 - G 1	18309-58	397
	A-DRF	0ME1219002Z	350 (5000)	up to 16 (4)	G 3/8	18309-59	399
	A-DRF	0ME1219003Z	350 (5000)	up to 50 (13)	G 1/2 - G 3/8	18309-60	401
	A-DRF	0ME1039004Z	350 (5000)	up to 95 (25)	G 3/4 - G 1/2	18309-61	403
	A-DRF	0ME1039005Z	350 (5000)	up to 150 (40)	G 3/4 - G 1	18309-62	405

Auxiliary valves - Pressure reducing

Pressure reducing and relieving, direct acting spool type

Symbol	Type	Code	Max. Pressure bar (psi)	Max. Flow l/min. (gpm)	Ports size	Data Sheet	Page
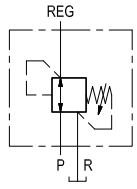	VRP-R	059027XYZ	210 (3000)	20 (5)	G 3/8	18309-72	409

Pressure reducing and relieving, direct acting spool type with free flow check

Symbol	Type	Code	Max. Pressure bar (psi)	Max. Flow l/min. (gpm)	Ports size	Data Sheet	Page
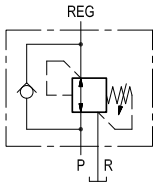	VRP-R-VU	059019XYZ	210 (3000)	20 (5)	G 3/8	18309-73	411

Pressure reducing, pilot operated spool type

Symbol	Type	Code	Max. Pressure bar (psi)	Max. Flow l/min. (gpm)	Ports size	Data Sheet	Page
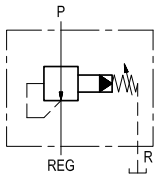	VRPC-150	059033XYZ	210 (3000)	120 (32)	G 1/2 - G 3/4	18309-74	413

Auxiliary valves - Sequence

Direct acting poppet type

Symbol	Type	Code	Max. Pressure bar (psi)	Max. Flow l/min. (gpm)	Ports size	Data Sheet	Page
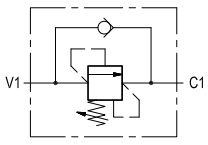	VSQ-10	052106XYZ	210 (3000)	10 (3)	G 1/4	18309-84	417
	VSQ-30	052107XYZ	210 (3000)	30 (8)	G 3/8 - G 1/2	18309-85	419

Auxiliary valves - Sequence

Direct acting poppet type, compensated

Symbol	Type	Code	Max. Pressure bar (psi)	Max. Flow l/min. (gpm)	Ports size	Data Sheet	Page
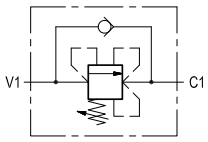	VSQ-CC-30	052111XYZ	210 (3000)	30 (8)	G 3/8 - G 1/2	18309-87	423

Pilot operated spool type

Symbol	Type	Code	Max. Pressure bar (psi)	Max. Flow l/min. (gpm)	Ports size	Data Sheet	Page
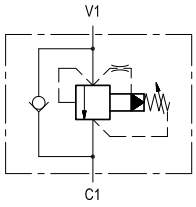	VSQP-150	052115XYZ	210 (3000)	150 (40)	G 1/2 - G 3/4	18309-86	421

Pilot operated spool type, compensated

Symbol	Type	Code	Max. Pressure bar (psi)	Max. Flow l/min. (gpm)	Ports size	Data Sheet	Page
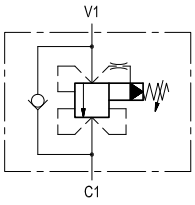	VSQP-CC-150	052406XYZ	210 (3000)	150 (40)	G 1/2 - G 3/4	18309-88	425

Auxiliary valves - Shuttle

Symbol	Type	Code	Max. Pressure bar (psi)	Max. Flow l/min. (gpm)	Ports size	Data Sheet	Page
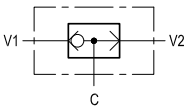	VFC	05990500Y	210 (3000)	50 (13)	G 1/4	18309-98	429

Special valves

Automatic shut-off

Symbol	Type	Code	Max. Pressure bar (psi)	Max. Flow l/min. (gpm)	Ports size	Data Sheet	Page
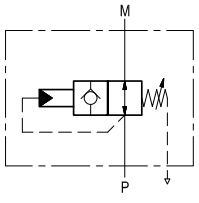	VEM	059803XYZ	210 (3000)	15 (4)	G 1/4	18310-10	433

Special valves

Pilot operated unloading

Symbol	Type	Code	Max. Pressure bar (psi)	Max. Flow l/min. (gpm)	Ports size	Data Sheet	Page
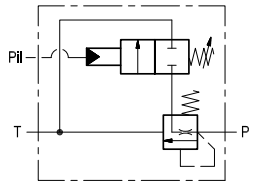	BM-N	059304XYZ	210 (3000)	200 (53)	G 1/2 - G 3/4	18310-11	435

Pump unloading

Symbol	Type	Code	Max. Pressure bar (psi)	Max. Flow l/min. (gpm)	Ports size	Data Sheet	Page
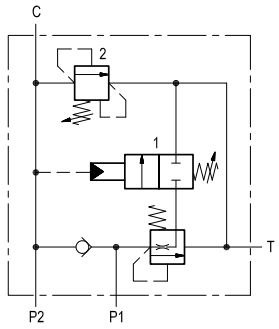	VEP-VSP2	059006XYZ	210 (3000)	30 (8)	G 3/4	18310-13	437

Purge valve for hydrostatic trasmission

Symbol	Type	Code	Max. Pressure bar (psi)	Max. Flow l/min. (gpm)	Ports size	Data Sheet	Page
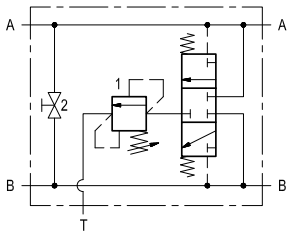	A-VSL-R	08640500Y	350 (5000)	90 (24)	G 3/4 - G 1	18310-18	439

Automatic directional

Symbol	Type	Code	Max. Pressure bar (psi)	Max. Flow l/min. (gpm)	Ports size	Data Sheet	Page
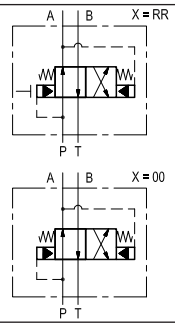	V.LC2-IA12	L5235...	250 (3600)	10-100 (3-26)	F10	18310-24	441

Load holding/motion control

Pilot operated check valves

Designation	Description	Ports	Code	Data sheet	Page
Single, standard configuration	VSO-SE	G 3/8	055279XYZ	18307-01	25
Single, standard configuration	VSO-SE	G 1/2	055201X03Z	18307-02	27
Single, standard configuration	VSO-SE	G 3/4	055201X04Z	18307-03	29
Single, standard configuration	VSO-SE-FC1	Flangeable	055286XYZ	18307-04	31
Single, standard configuration	VSO-SE-FC1	Flangeable	055202XYZ	18307-05	33
Single, standard configuration	VSO-SE-DL	G 1/4	055211X09Z	18307-06	35
Single, standard configuration	VSO-SE-DL	G 3/8	055211X02Z	18307-07	37
Single, standard configuration	VSO-SE-DL	G 1/2	055211X03Z	18307-08	39
Single, standard configuration	VSO-SE-DL-FCV	Flangeable	055239XYZ	18307-09	41
Single, standard configuration	A-VSO-SE-LB	G 1/4	085291XYZ	18307-10	43
Single, vented pilot piston	VSO-SE-PS	G 3/8	055224XYZ	18307-11	45
Single, manual shut-off	VSO-SE-DL-SX	G 3/8, G 1/2	055226XYZ	18307-12	47
Single, manual shut-off	VSO-SE-DL-DX	G 3/8, G 1/2	055227XYZ	18307-13	49
Single, manual shut-off	VSO-SE-DL-FCV-SX	Flangeable	0552KXYZ	18307-14	51
Single, manual shut-off	VSO-SE-DL-FCV-DX	Flangeable	0552KXYZ	18307-15	53
Dual, standard configuration	VSO-DE	G 3/8	055343XYZ	18307-16	55
Dual, standard configuration	VSO-DE	G 1/2	055301X03Z	18307-17	57
Dual, standard configuration	VSO-DE	G 3/4	055301X04Z	18307-18	59
Dual, standard configuration	VSO-DE-FC2	Flangeable	055344XYZ	18307-19	61
Dual, standard configuration	VSO-DE-FC2	Flangeable	055302XYZ	18307-20	63
Dual, standard configuration	VSO-DE-L	G 1/4	055303X09Z	18307-21	65

Load holding/motion control

Pilot operated check valves

Designation	Description	Ports	Code	Data sheet	Page
Dual, standard configuration	VSO-DE-L	G 3/8	055303X02Z	18307-22	67
Dual, standard configuration	VSO-DE-L	G 1/2	055303X03Z	18307-23	69
Dual, standard configuration	A-VSO-DE-LB	G 1/4	085357XYZ	18307-24	71

Pilot operated check, single

VSO-SE

05.52.79 - X - Y - Z

Technical data

Operating pressure	up to 210 bar (3000 psi)
Max. flow	30 l/min. (8 gpm)
Pilot ratio	7 : 1
Weight	0.68 kg (1.5 lbs)
Manifold material	Aluminium
Note: aluminium bodies are often strong enough for operating pressures exceeding 210 bar (3000 psi), depending from the fatigue life expected in the specific application. If in doubt, consult our Service Network.	
Fluid	Mineral oil (HL, HLP) according DIN 51524
Fluid temperature range	-30 °C to 100 (-22 to 212 °F)
Viscosity range	10 to 500 mm^2/s (cSt)
Recommended degree of fluid contamination	Class 19/17/14 according to ISO 4406
Other technical data	see data sheet 18350-50
The version with O-Ring and heavier spring is generally recommended.	

Note: for applications outside these parameters, please consult us.

Description

Flow is allowed to pass from V2 to C2 when pressure at V2 rises above the spring bias pressure and the poppet is pushed from its seat. The valve is normally closed (checked) from C2 to V2; when sufficient pilot pressure is present at V1-C1 the pilot piston acts to push the poppet from its seat and flow is allowed from C2 to V2. Precision machining and hardening processes allow virtually leak-free performance in the checked condition.

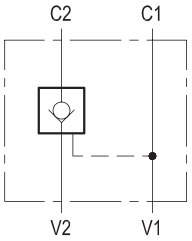

Characteristic curve

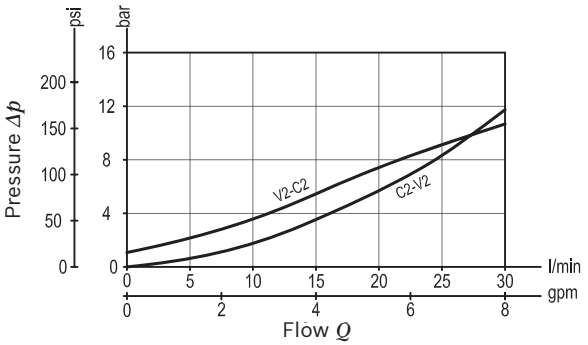

Dimensions [mm (inches)]

Ordering code

05.52.79	X	Y	Z

Pilot operated check, single

O-Ring on pilot piston

00	No O-Ring
10	With O-Ring

Port sizes	V1 - V2	C1 - C2	
97	G 3/8	G 3/8	

		SPRINGS
		Cracking pressure bar (psi)
00	only for X=00	1 (15)
01	only for X=10	4.5 (65)

Preferred types

Type	Material number
055279009700000	R930002375
055279009701000	R930002376

Type	Material number
055279109701000	R930002377

Dimensions

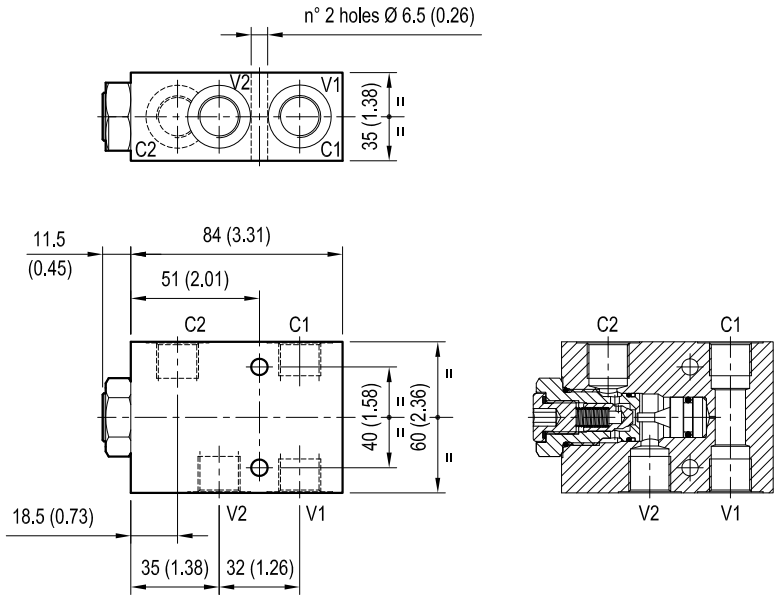

Pilot operated check, single

VSO-SE

05.52.01 - X - 03 - Z

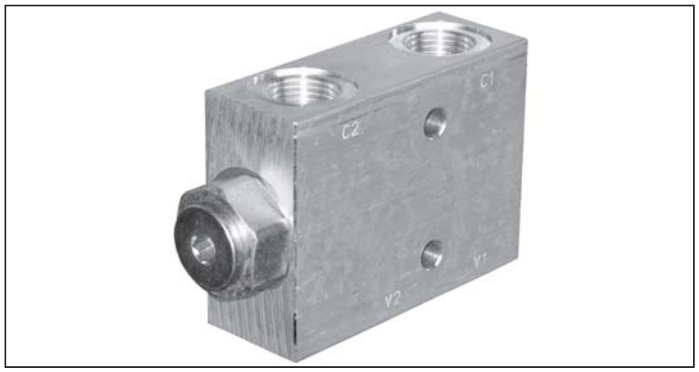

Description

Flow is allowed to pass from V2 to C2 when pressure at V2 rises above the spring bias pressure and the poppet is pushed from its seat. The valve is normally closed (checked) from C2 to V2; when sufficient pilot pressure is present at V1-C1 the pilot piston acts to push the poppet from its seat and flow is allowed from C2 to V2. Precision machining and hardening processes allow virtually leak-free performance in the checked condition.

Technical data

Operating pressure	up to 210 bar (3000 psi)
Max. flow	50 l/min. (13 gpm)
Weight	0.72 kg (1.6 lbs)
Manifold material	Aluminium
Note: aluminium bodies are often strong enough for operating pressures exceeding 210 bar (3000 psi), depending from the fatigue life expected in the specific application. If in doubt, consult our Service Network.	
Fluid	Mineral oil (HL, HLP) according DIN 51524
Fluid temperature range	-30 °C to 100 (-22 to 212 °F)
Viscosity range	10 to 500 mm^2/s (cSt)
Recommended degree of fluid contamination	Class 19/17/14 according to ISO 4406
Other technical data	see data sheet 18350-50
The version with O-Ring and heavier spring is generally recommended.	

Note: for applications outside these parameters, please consult us.

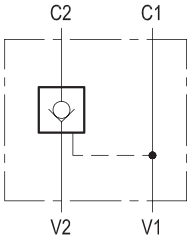

Characteristic curve

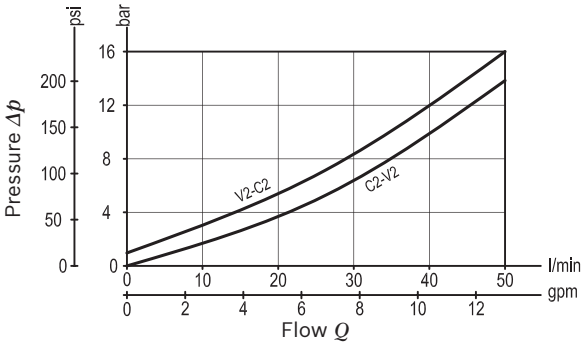

Dimensions [mm (inches)]

Ordering code

05.52.01	X	03	Z

Pilot operated check, single

O-Ring on pilot piston	Pilot ratio
00 No O-Ring	3.2 : 1
10 With O-Ring	3.2 : 1
25 With O-Ring	6 : 1

Port sizes	V1 - V2	C1 - C2	
03	G 1/2	G 1/2	

		SPRINGS
		Cracking pressure bar (psi)
00	only for X=00	1 (15)
01	only for X=10 and X=25	8 (116)

Preferred types

Type	Material number
05520100030000A	R930002299
05520110030100A	R930002302

Type	Material number
055201250301000	R930002308

Dimensions

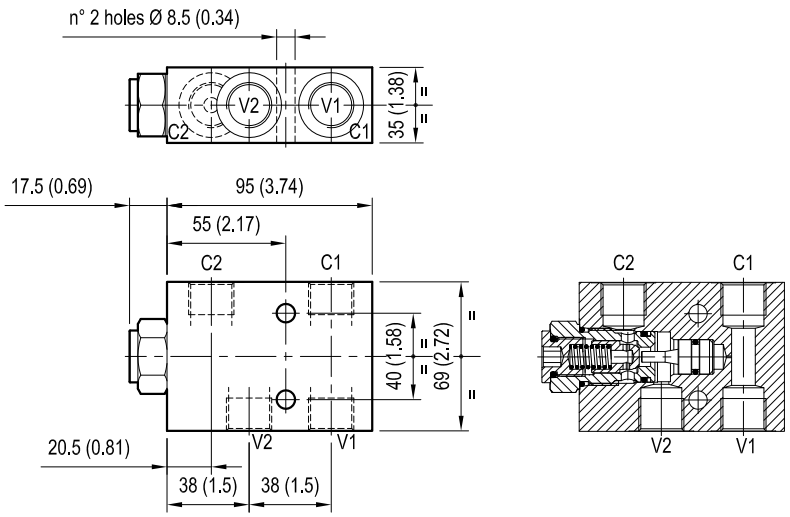

Pilot operated check, single

VSO-SE

05.52.01 - X - 04 - Z

Description

Flow is allowed to pass from V2 to C2 when pressure at V2 rises above the spring bias pressure and the poppet is pushed from its seat. The valve is normally closed (checked) from C2 to V2; when sufficient pilot pressure is present at V1-C1 the pilot piston acts to push the poppet from its seat and flow is allowed from C2 to V2. Precision machining and hardening processes allow virtually leak-free performance in the checked condition.

Technical data

Operating pressure	up to 210 bar (3000 psi)
Max. flow	100 l/min. (26 gpm)
Pilot ratio	4 : 1
Weight	1.85 kg (4.1 lbs)
Manifold material	Aluminium
Note: aluminium bodies are often strong enough for operating pressures exceeding 210 bar (3000 psi), depending from the fatigue life expected in the specific application. If in doubt, consult our Service Network.	
Fluid	Mineral oil (HL, HLP) according DIN 51524
Fluid temperature range	-30 °C to 100 (-22 to 212 °F)
Viscosity range	10 to 500 mm^2/s (cSt)
Recommended degree of fluid contamination	Class 19/17/14 according to ISO 4406
Other technical data	see data sheet 18350-50
The version with O-Ring and heavier spring is generally recommended.	

Note: for applications outside these parameters, please consult us.

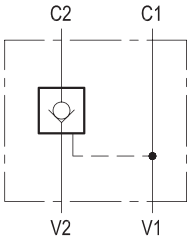

Characteristic curve

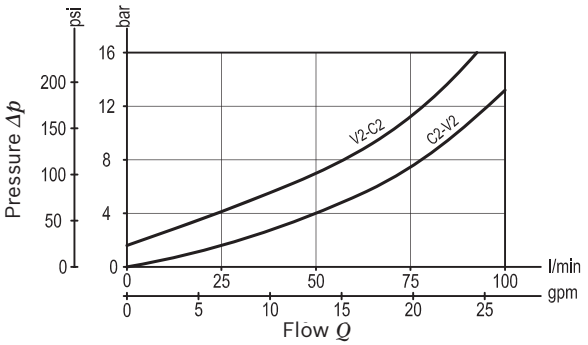

Dimensions [mm (inches)]

Ordering code

05.52.01	X	04	Z

Pilot operated check, single

O-Ring on pilot piston

00	No O-Ring
10	With O-Ring

Port sizes	V1 - V2	C1 - C2	
04	G 3/4	G 3/4	

		SPRINGS
		Cracking pressure bar (psi)
00	only for X=00	1.5 (22)
01	only for X=10	8 (116)

Preferred types

Type	Material number
05520100040000A	R930002300
055201100401000	R930002304

Type	Material number

Dimensions

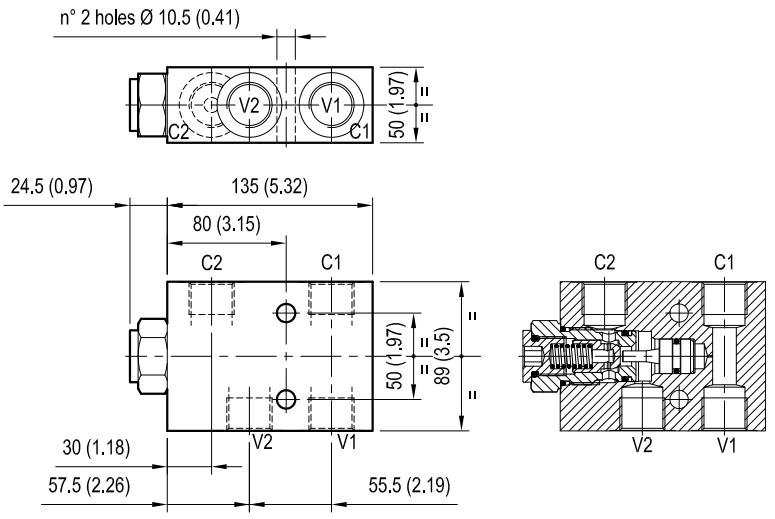

Pilot operated check, single

VSO-SE-FC1

05.52.86 - X - Y - Z

Description

Flow is allowed to pass from V2 to C2 when pressure at V2 rises above the spring bias pressure and the poppet is pushed from its seat. The valve is normally closed (checked) from C2 to V2; when sufficient pilot pressure is present at V1-C1 the pilot piston acts to push the poppet from its seat and flow is allowed from C2 to V2. Precision machining and hardening processes allow virtually leak-free performance in the checked condition. For better safety and compact assembly, the C2 port is flanged (gasket mounted) directly on the actuator.

Technical data

Operating pressure	up to 210 bar (3000 psi)
Max. flow	30 l/min. (8 gpm)
Pilot ratio	7 : 1
Weight	0.68 kg (1.5 lbs)
Manifold material	Aluminium
Note: aluminium bodies are often strong enough for operating pressures exceeding 210 bar (3000 psi), depending from the fatigue life expected in the specific application. If in doubt, consult our Service Network.	
Flange kit code[1)]	E00000000000029 (R930001056)
Fluid	Mineral oil (HL, HLP) according DIN 51524
Fluid temperature range	-30 °C to 100 (-22 to 212 °F)
Viscosity range	10 to 500 mm^2/s (cSt)
Recommended degree of fluid contamination	Class 19/17/14 according to ISO 4406
Other technical data	see data sheet 18350-50
The version with O-Ring and heavier spring is generally recommended.	

Note: for applications outside these parameters, please consult us.

[1)] Seal for 20 valves.

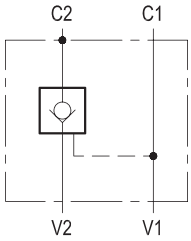

Characteristic curve

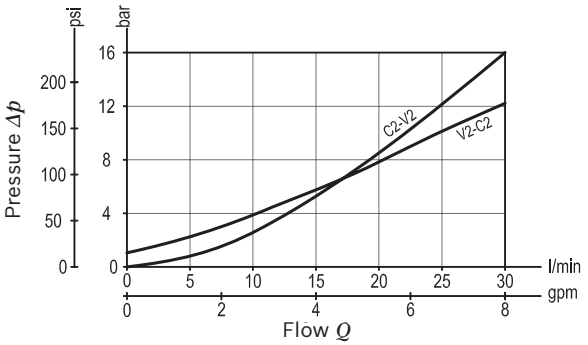

Dimensions [mm (inches)]

Ordering code

05.52.86	X	Y	Z

Pilot operated check, single

O-Ring on pilot piston

00	No O-Ring
10	With O-Ring

		SPRINGS
		Cracking pressure bar (psi)
00	only for X=00	1 (15)
01	only for X=10	4.5 (65)

Port sizes	V1 - V2	C1 - C2	C2
02	G 3/8	G 3/8	Ø6 (0.24)

Preferred types

Type	Material number
055286000200000	R930002383
055286100201000	R930002384

Type	Material number

Dimensions

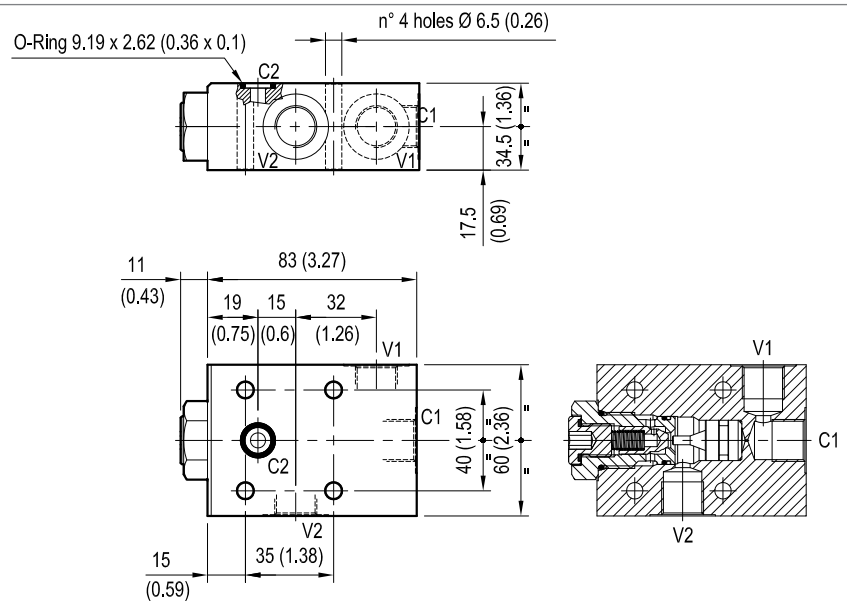

Pilot operated check, single

VSO-SE-FC1

05.52.02 - X - Y - Z

Description

Flow is allowed to pass from V2 to C2 when pressure at V2 rises above the spring bias pressure and the poppet is pushed from its seat. The valve is normally closed (checked) from C2 to V2; when sufficient pilot pressure is present at V1-C1 the pilot piston acts to push the poppet from its seat and flow is allowed from C2 to V2. Precision machining and hardening processes allow virtually leak-free performance in the checked condition. For better safety and compact assembly, the C2 port is flanged (gasket mounted) directly on the actuator.

Technical data

Operating pressure	up to 210 bar (3000 psi)
Max. flow	50 l/min. (13 gpm)
Weight	0.72 kg (1.59 lbs)
Manifold material	Aluminium
Note: aluminium bodies are often strong enough for operating pressures exceeding 210 bar (3000 psi), depending from the fatigue life expected in the specific application. If in doubt, consult our Service Network.	
Flange seal kit[1)]	E00000000000008 (R930004538)
Fluid	Mineral oil (HL, HLP) according DIN 51524
Fluid temperature range	-30 °C to 100 (-22 to 212 °F)
Viscosity range	10 to 500 mm^2/s (cSt)
Recommended degree of fluid contamination	Class 19/17/14 according to ISO 4406
Other technical data	see data sheet 18350-50
The version with O-Ring and heavier spring is generally recommended.	

Note: for applications outside these parameters, please consult us.

[1)] Seal for 20 valves.

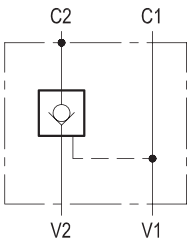

Characteristic curve

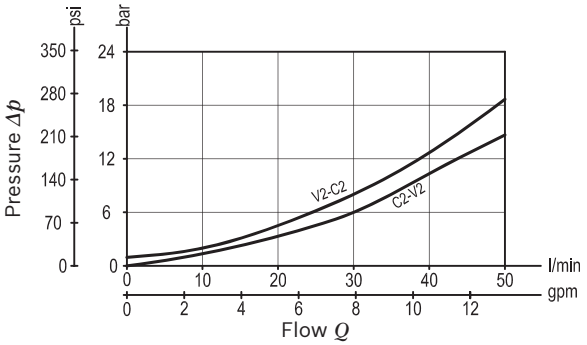

Ordering code

05.52.02	X	Y	Z

Pilot operated check, single

O-Ring on pilot piston	Pilot ratio
00 No O-Ring	3.2 : 1
10 With O-Ring	3.2 : 1
25 With O-Ring	6 : 1

Port sizes	V1 - V2	C1	C2
03	G 1/2	G 1/2	Ø7 (0.28)

		SPRINGS
		Cracking pressure bar (psi)
00	only for X=00	1 (15)
01	only for X=10 and X=25	8 (116)

Preferred types

Type	Material number
05520200030000A	R930002310
055202100301000	R930002313

Type	Material number
055202250301000	R930002314

Dimensions

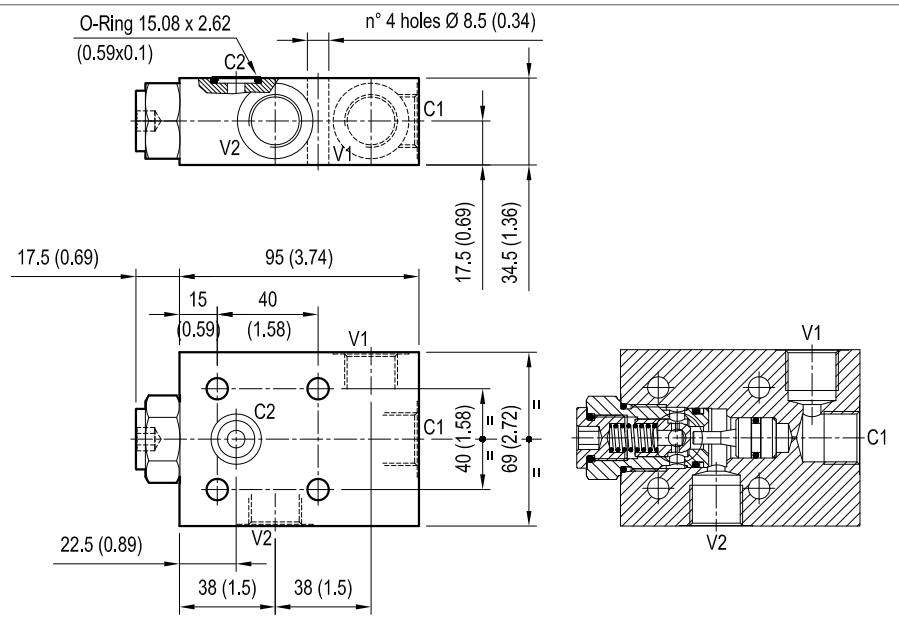

Pilot operated check, single

VSO-SE-DL

05.52.01 - X - 09 - Z

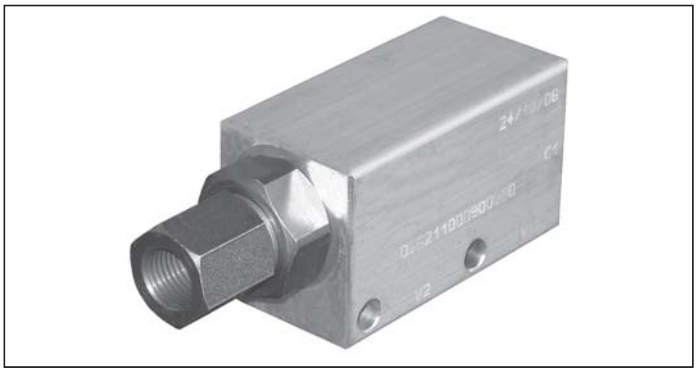

Technical data

Operating pressure	up to 210 bar (3000 psi)
Max. flow	20 l/min. (5 gpm)
Weight	0.39 kg (0.86 lbs)
Manifold material	Anodized aluminium
Note: aluminium bodies are often strong enough for operating pressures exceeding 210 bar (3000 psi), depending from the fatigue life expected in the specific application. If in doubt, consult our Service Network.	
Fluid	Mineral oil (HL, HLP) according DIN 51524
Fluid temperature range	-30 °C to 100 (-22 to 212 °F)
Viscosity range	10 to 500 mm^2/s (cSt)
Recommended degree of fluid contamination	Class 19/17/14 according to ISO 4406
Other technical data	see data sheet 18350-50
The version with O-Ring and heavier spring is generally recommended.	

Note: for applications outside these parameters, please consult us.

Description

Flow is allowed to pass from V2 to C2 when pressure at V2 rises above the spring bias pressure and the poppet is pushed from its seat. The valve is normally closed (checked) from C2 to V2; when sufficient pilot pressure is present at V1-C1 the pilot piston acts to push the poppet from its seat and flow is allowed from C2 to V2. Precision machining and hardening processes allow virtually leak-free performance in the checked condition.

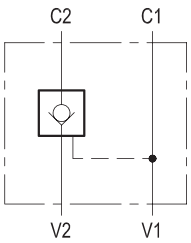

Characteristic curve

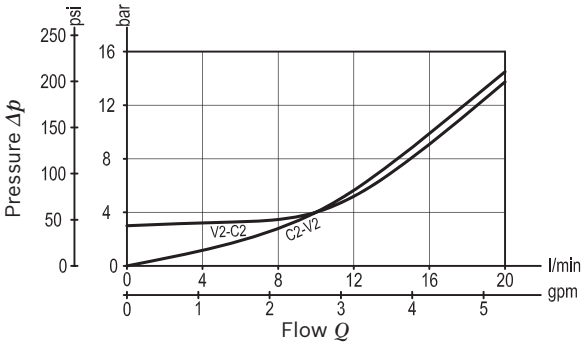

Dimensions [mm (inches)]

Ordering code

05.52.11	X	09	Z

Pilot operated check, single

O-Ring on pilot piston	Pilot ratio
00 No O-Ring	4 : 1
10 With O-Ring	4 : 1
37 With O-Ring	9 : 1

Port sizes	V1 - V2	C1 - C2	
09	G 1/4	G 1/4	

		SPRINGS
		Cracking pressure bar (psi)
00	only for X=00	2 (29)
01	only for X=10 and X=37	8 (116)

Preferred types

Type	Material number
055211000900000	R930002318
055211100901000	R930002323

Type	Material number
055211370901000	R930002330

Dimensions

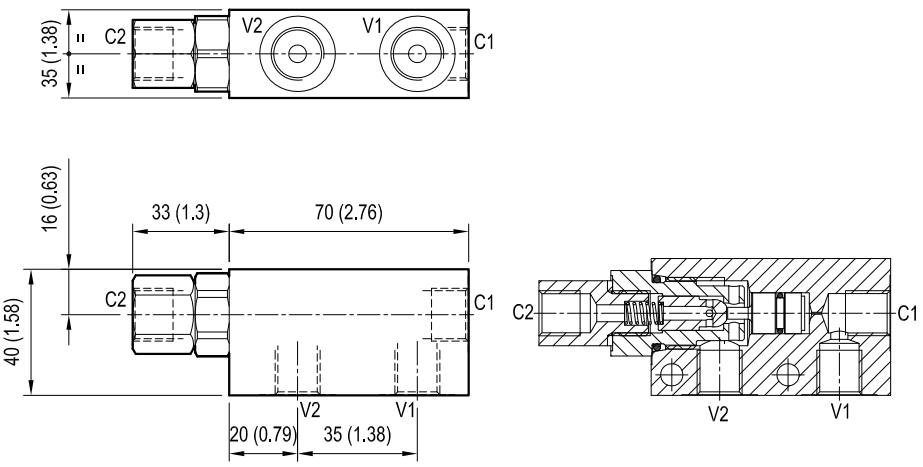

Pilot operated check, single

VSO-SE-DL

05.52.11 - X - 02 - Z

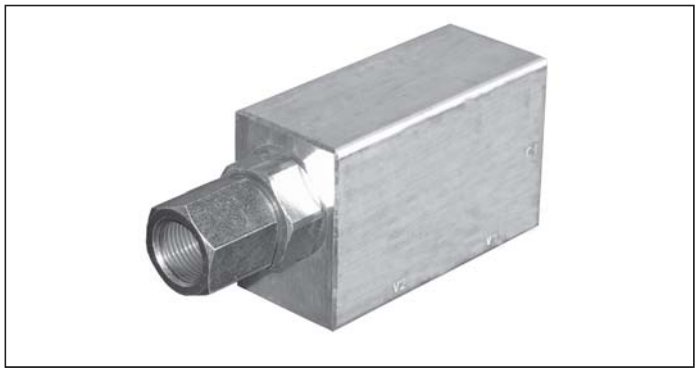

Description

Flow is allowed to pass from V2 to C2 when pressure at V2 rises above the spring bias pressure and the poppet is pushed from its seat. The valve is normally closed (checked) from C2 to V2; when sufficient pilot pressure is present at V1-C1 the pilot piston acts to push the poppet from its seat and flow is allowed from C2 to V2. Precision machining and hardening processes allow virtually leak-free performance in the checked condition.

Technical data

Operating pressure	up to 210 bar (3000 psi)
Max. flow	20 l/min. (5 gpm)
Pilot ratio	4 : 1
Weight	0.47 kg (1.04 lbs)
Manifold material	Aluminium
Note: aluminium bodies are often strong enough for operating pressures exceeding 210 bar (3000 psi), depending from the fatigue life expected in the specific application. If in doubt, consult our Service Network.	
Fluid	Mineral oil (HL, HLP) according DIN 51524
Fluid temperature range	-30 °C to 100 (-22 to 212 °F)
Viscosity range	10 to 500 mm^2/s (cSt)
Recommended degree of fluid contamination	Class 19/17/14 according to ISO 4406
Other technical data	see data sheet 18350-50
The version with O-Ring and heavier spring is generally recommended.	

Note: for applications outside these parameters, please consult us.

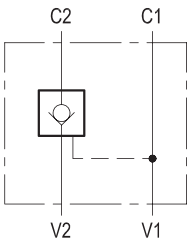

Characteristic curve

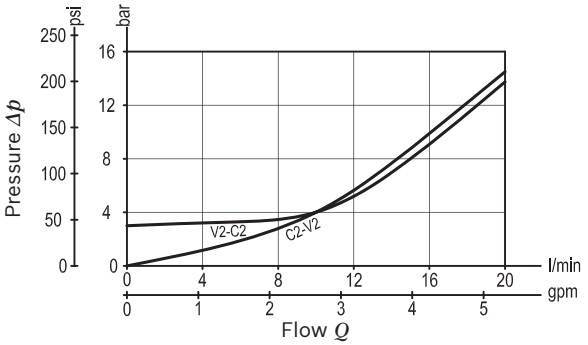

Dimensions [mm (inches)]

Ordering code

05.52.11	X	02	Z

Pilot operated check, single

O-Ring on pilot piston

00	No O-Ring
10	With O-Ring

		SPRINGS
		Cracking pressure bar (psi)
00	only for X=00	2 (29)
01	only for X=10	8 (116)

Port sizes	V1 - V2	C1 - C2	
02	G 3/8	G 3/8	

Preferred types

Type	Material number
055211000200000	R930002315
055211100201000	R930002320

Type	Material number

Dimensions

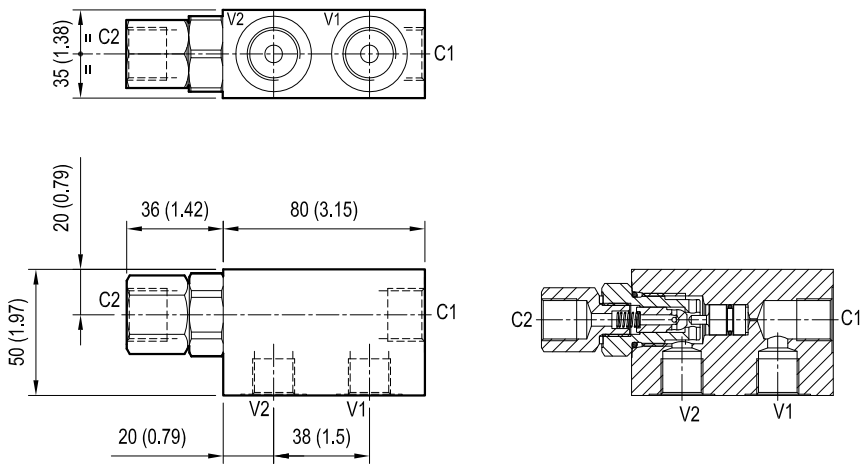

Pilot operated check, single

VSO-SE-DL 05.52.11 - X - 03 - Z

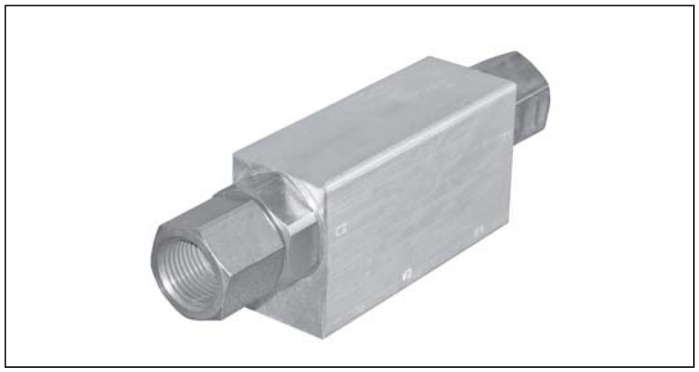

Description

Flow is allowed to pass from V2 to C2 when pressure at V2 rises above the spring bias pressure and the poppet is pushed from its seat. The valve is normally closed (checked) from C2 to V2; when sufficient pilot pressure is present at V1-C1 the pilot piston acts to push the poppet from its seat and flow is allowed from C2 to V2. Precision machining and hardening processes allow virtually leak-free performance in the checked condition.

Technical data

Operating pressure	up to 210 bar (3000 psi)
Max. flow	50 l/min. (13 gpm)
Weight	0.49 kg (1.09 lbs)
Manifold material	Aluminium
Note: aluminium bodies are often strong enough for operating pressures exceeding 210 bar (3000 psi), depending from the fatigue life expected in the specific application. If in doubt, consult our Service Network.	
Fluid	Mineral oil (HL, HLP) according DIN 51524
Fluid temperature range	-30 °C to 100 (-22 to 212 °F)
Viscosity range	10 to 500 mm^2/s (cSt)
Recommended degree of fluid contamination	Class 19/17/14 according to ISO 4406
Other technical data	see data sheet 18350-50
The version with O-Ring and heavier spring is generally recommended.	

Note: for applications outside these parameters, please consult us.

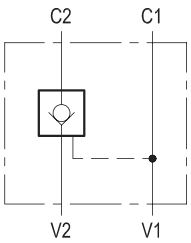

Characteristic curve

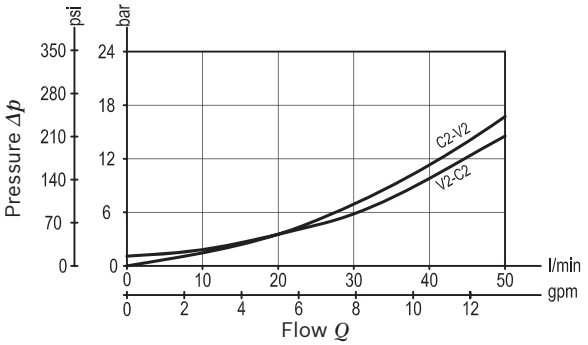

Ordering code

05.52.11	X	03	Z

Pilot operated check, single

O-Ring on pilot piston	Pilot ratio
00 No O-Ring	3.2 : 1
10 With O-Ring	3.2 : 1
25 With O-Ring	6 : 1

		SPRINGS
		Cracking pressure bar (psi)
00	only for X=00	1 (15)
01	only for X=10	8 (116)
00	only for X=25	8 (116)

Port sizes	V1 - V2	C1 - C2	
03	G 1/2	G 1/2	

Preferred types

Type	Material number
05521100030000B	R930002317
05521110030100A	R930002321

Type	Material number
05521125030000A	R930002327

Dimensions

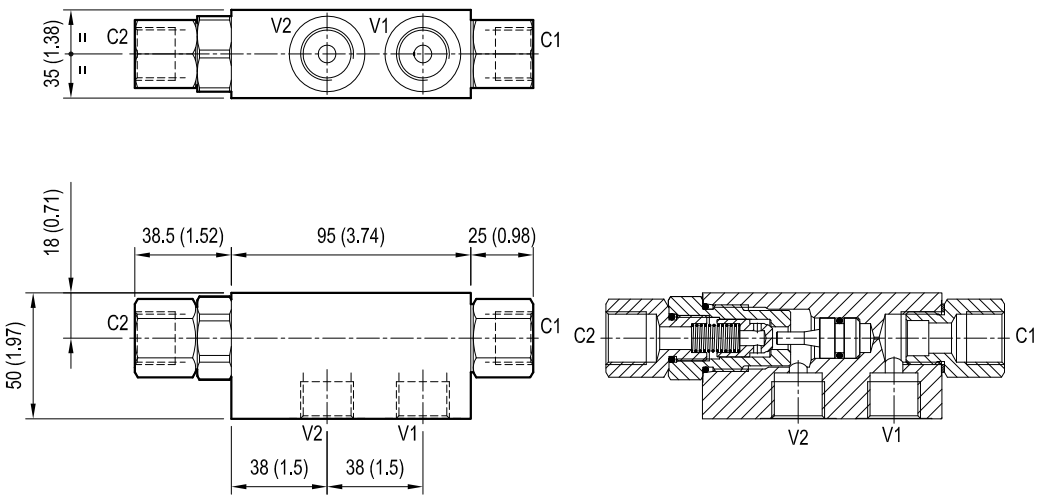

Pilot operated check, single

VSO-SE-DL-FCV

05.52.39 - X - Y - Z

Description

Flow is allowed to pass from V2 to C2 when pressure at V2 rises above the spring bias pressure and the poppet is pushed from its seat. The valve is normally closed (checked) from C2 to V2; when sufficient pilot pressure is present at V1-C1 the pilot piston acts to push the poppet from its seat and flow is allowed from C2 to V2. Precision machining and hardening processes allow virtually leak-free performance in the checked condition. For compact assembly, the C2 port is banjo bolted directly onto the actuator port.

Technical data

Operating pressure	up to 210 bar (3000 psi)
Max. flow	30 l/min. (8 gpm)
Pilot ratio	4.6 : 1
Installation torque	70 - 80 Nm (52 - 59 ft-lbs)
Weight	0.7 kg (1.5 lbs)
Manifold material	Aluminium
Note: aluminium bodies are often strong enough for operating pressures exceeding 210 bar (3000 psi), depending from the fatigue life expected in the specific application. If in doubt, consult our Service Network.	
Fluid	Mineral oil (HL, HLP) according DIN 51524
Fluid temperature range	-30 °C to 100 (-22 to 212 °F)
Viscosity range	10 to 500 mm^2/s (cSt)
Recommended degree of fluid contamination	Class 19/17/14 according to ISO 4406
Other technical data	see data sheet 18350-50
The version with O-Ring and heavier spring is generally recommended.	

Note: for applications outside these parameters, please consult us.

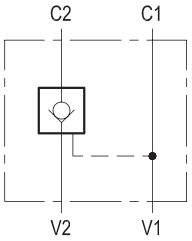

Characteristic curve

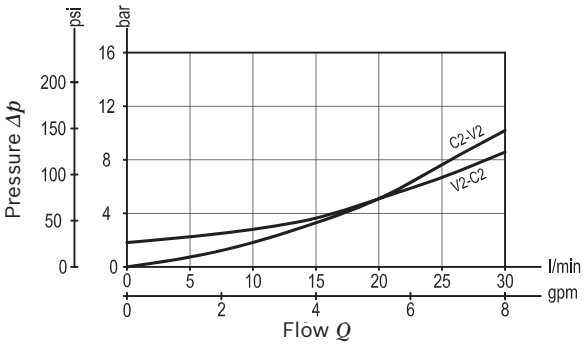

Dimensions [mm (inches)]

Ordering code

05.52.39	X	Y	Z

Pilot operated check, single

O-Ring on pilot piston

10	With O-Ring

	SPRINGS
	Cracking pressure bar (psi)
00	1 (15)

Port sizes	V1 - V2	C1 - C2	
02	G 3/8	G 3/8	

Preferred types

Type	Material number
05523910020000B	R930002356

Type	Material number

Dimensions

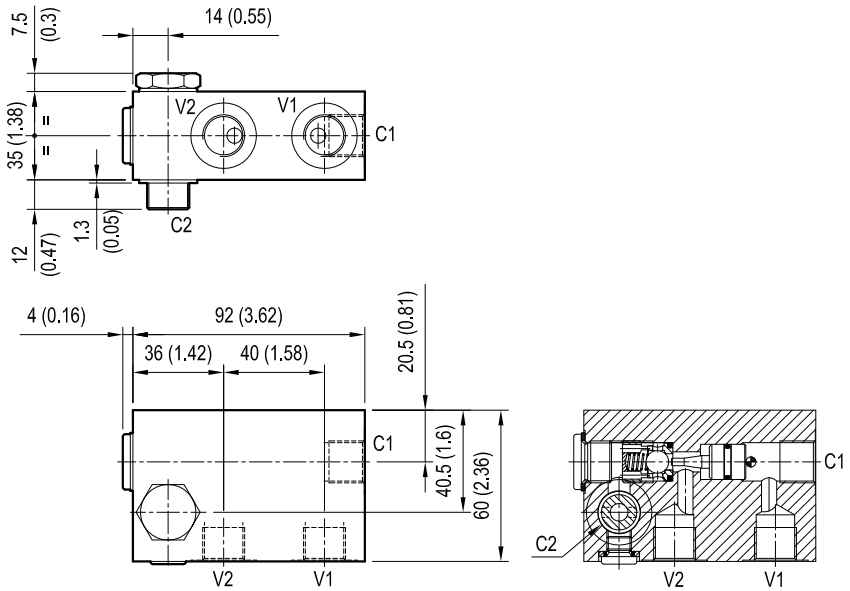

Pilot operated check, single

A-VSO-SE-LB

08.52.91 - X - Y - Z

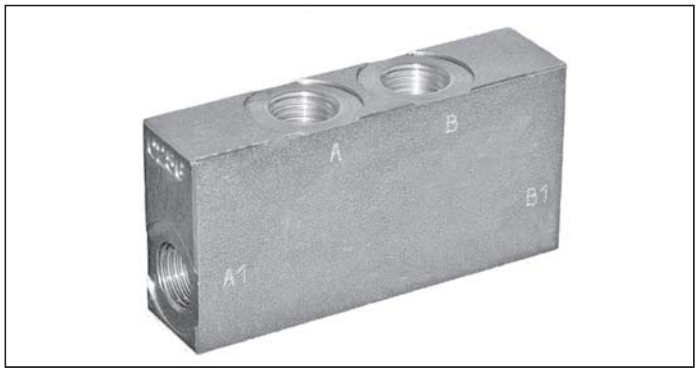

Technical data

Max. operating pressure	350 bar (5000 psi)
Max. flow	20 l/min. (5 gpm)
Pilot ratio	4 : 1
Weight	0.35 kg (0.77 lbs)
Manifold material	Zinc plated steel
Fluid	Mineral oil (HL, HLP) according DIN 51524
Fluid temperature range	-30 °C to 100 (-22 to 212 °F)
Viscosity range	10 to 500 mm^2/s (cSt)
Recommended degree of fluid contamination	Class 19/17/14 according to ISO 4406
Other technical data	see data sheet 18350-50

Note: for applications outside these parameters, please consult us.

Description

Flow is allowed to pass from A to A1 when pressure at A rises above the spring bias pressure and the poppet is pushed from its seat. The valve is normally closed (checked) from A1 to A; when sufficient pilot pressure is present at B-B1 the pilot piston acts to push the poppet from its seat and flow is allowed from A1 to A. Precision machining and hardening processes allow virtually leak-free performance in the checked condition.

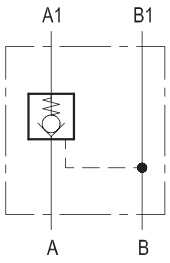

Characteristic curve

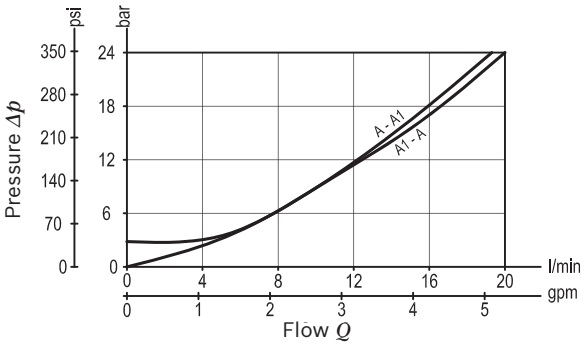

Dimensions [mm (inches)]

Ordering code

08.52.91	X	Y	Z

Pilot operated check, single

O-Ring on pilot piston

10	With O-Ring

	SPRINGS
	Cracking pressure bar (psi)
00	3 (44)

Port sizes	A - B	A1 - B1	
09	G 1/4	G 1/4	

Preferred types

Type	Material number
085291100900000	R930004056

Type	Material number

Dimensions

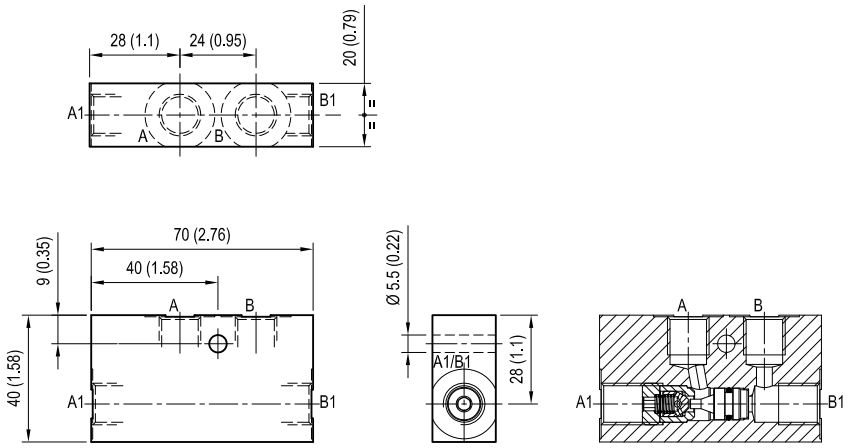

Pilot operated check, single vented pilot piston

VSO-SE-PS

05.52.24 - X - Y - Z

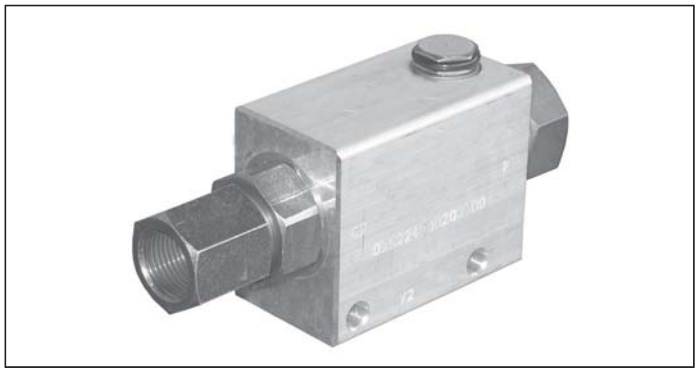

Description

Flow is allowed to pass from V2 to C2 when pressure at V2 rises above the spring bias pressure and the poppet is pushed from its seat. The valve is normally closed (checked) from C2 to V2; when sufficient pilot pressure is present at Pil the pilot piston acts to push the poppet from its seat and flow is allowed from C2 to V2. The pilot piston is vented and the pilot pressure required to push the poppet from its seat is independent from any back-pressure at V2 port.

Technical data

Operating pressure	up to 210 bar (3000 psi)
Max. flow	30 l/min. (8 gpm)
Pilot ratio	10 : 1
Weight	0.5 kg (1.1 lbs)
Manifold material	Aluminium
Note: aluminium bodies are often strong enough for operating pressures exceeding 210 bar (3000 psi), depending from the fatigue life expected in the specific application. If in doubt, consult our Service Network.	
Fluid	Mineral oil (HL, HLP) according DIN 51524
Fluid temperature range	-30 °C to 100 (-22 to 212 °F)
Viscosity range	10 to 500 mm^2/s (cSt)
Recommended degree of fluid contamination	Class 19/17/14 according to ISO 4406
Other technical data	see data sheet 18350-50
Whenever possible, it is recommended to remove the air bleed plug and to connect the port (G 1/8) to tank. The version with heavier spring is generally recommended.	

Note: for applications outside these parameters, please consult us.

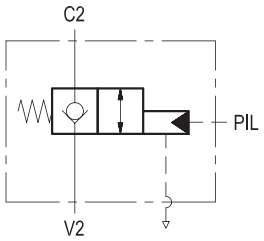

Characteristic curve

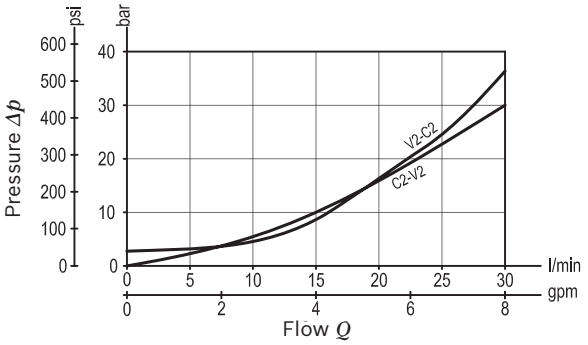

Ordering code

05.52.24	X	Y	Z

Pilot operated check, single vented pilot piston

O-Ring on pilot piston

00	No O-Ring

	SPRINGS
	Cracking pressure bar (psi)
00	2 (29)
01	8 (116)

Port sizes	V2	C2	Pil
02	G 3/8	G 3/8	G 1/4

Preferred types

Type	Material number
055224000200000	R930002335
055224000201000	R930002336

Type	Material number

Dimensions

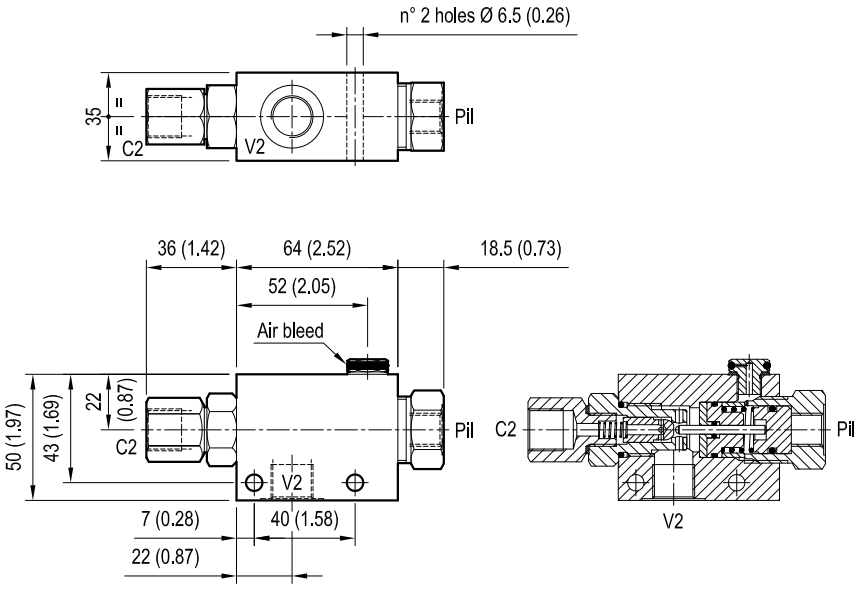

Pilot operated check, single manual shut-off

VSO-SE-DL-SX

05.52.26 - X - Y - Z

Technical data

Operating pressure	up to 210 bar (3000 psi)
Max. flow	see performance graph
Weight	see “Dimensions”
Manifold material	Aluminium
Note: aluminium bodies are often strong enough for operating pressures exceeding 210 bar (3000 psi), depending from the fatigue life expected in the specific application. If in doubt, consult our Service Network.	
Fluid	Mineral oil (HL, HLP) according DIN 51524
Fluid temperature range	-30 °C to 100 (-22 to 212 °F)
Viscosity range	5 to 800 mm^2/s (cSt)
Recommended degree of fluid contamination	Class 19/17/14 according to ISO 4406
Other technical data	see data sheet 18350-50

Note: for applications outside these parameters, please consult us.

Description

A tap, manually controlled by the operator, allows inlet flow from V2 to pass through the check valve to C2: as a result, the motion of the actuator (typically the extension and positioning of an outrigger) happens under the operator’s direct sight. The valve is normally closed (checked) and virtually leak-free from C2 to V2 in order to prevent reverse motion. Flow outlet from C2 to V2 and reverse motion (i.e. outrigger retraction or lifting up) is possible with manual tap open and if sufficient pilot pressure is present at V1-C1 so that the pilot piston may push the poppet from its seat.

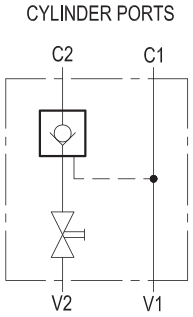

Characteristic curve

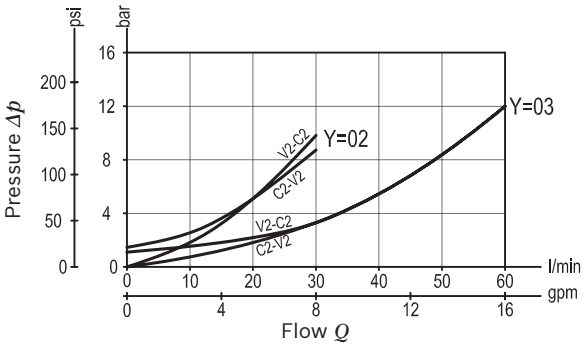

Ordering code

05.52.26	X	Y	Z

Pilot operated check, single manual shut-off

O-Ring on pilot piston

10 With O-Ring

		SPRINGS
		Cracking pressure bar (psi)
00	only for Y=02	1.6 (23)
	only for Y=03	0.6 (9)

Port sizes	V1 - V2	C1 - C2	
02	G 3/8	G 3/8	
03	G 1/2	G 1/2	

Preferred types

Type	Material number
05522610020000C	R930002338
05522610030000B	R930002342

Type	Material number

Dimensions

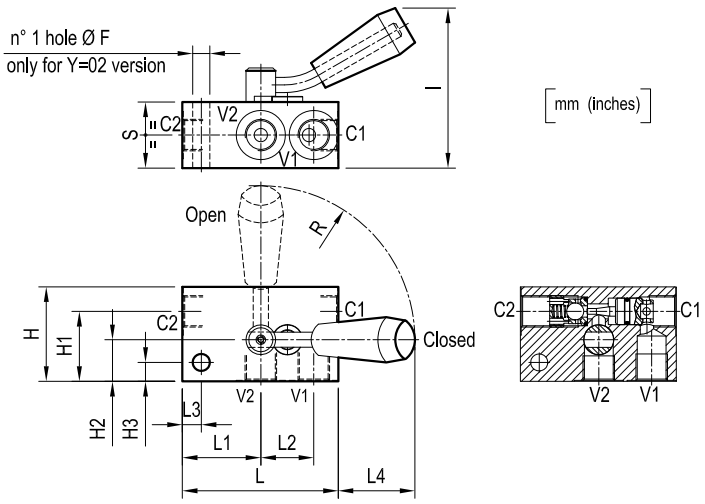

35 (1.38)	40.5 (1.6)	- -	35 (1.38)	40.5 (1.6)	90.5 (3.56)	85 (3.35)	- -	30 (1.18)	50 (1.97)	65 (2.56)	- -	82 (3.23)		G 1/2	3.6 : 1	1 (2.2)
35 (1.38)	40.5 (1.6)	10 (0.39)	28 (1.1)	41.5 (1.63)	82.5 (3.25)	85 (3.35)	10 (0.39)	22 (0.87)	37 (1.46)	50 (1.97)	9 (0.35)	82 (3.23)		G 3/8	5.4 : 1	0.6 (1.32)
S	L4	L3	L2	L1	L	l	H3	H2	H1	H	F	R		Y	Pilot ratio	Weight kg (lbs)

Pilot operated check, single manual shut-off

VSO-SE-DL-DX

05.52.27 - X - Y - Z

Technical data

Operating pressure	up to 210 bar (3000 psi)
Max. flow	see “Performance graph”
Weight	see “Dimensions”
Manifold material	Aluminium
Note: aluminium bodies are often strong enough for operating pressures exceeding 210 bar (3000 psi), depending from the fatigue life expected in the specific application. If in doubt, consult our Service Network.	
Fluid	Mineral oil (HL, HLP) according DIN 51524
Fluid temperature range	-30 °C to 100 (-22 to 212 °F)
Viscosity range	5 to 800 mm^2/s (cSt)
Recommended degree of fluid contamination	Class 19/17/14 according to ISO 4406
Other technical data	see data sheet 18350-50

Note: for applications outside these parameters, please consult us.

Description

A tap, manually controlled by the operator, allows inlet flow from V2 to pass through the check valve to C2: as a result, the motion of the actuator (typically the extension and positioning of an outrigger) happens under the operator’s direct sight. The valve is normally closed (checked) and virtually leak-free from C2 to V2 in order to prevent reverse motion. Flow outlet from C2 to V2 and reverse motion (i.e. outrigger retraction or lifting up) is possible with manual tap open and if sufficient pilot pressure is present at V1-C1 so that the pilot piston may push the poppet from its seat.

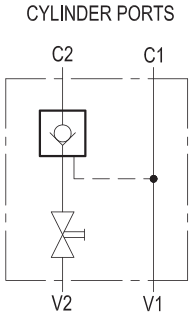

Characteristic curve

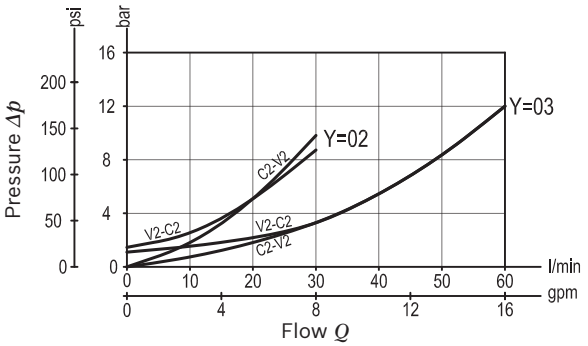

Ordering code

05.52.27	X	Y	Z

Pilot operated check, single manual shut-off

O-Ring on pilot piston

10 With O-Ring

		SPRINGS
		Cracking pressure bar (psi)
00	only for Y=02	1.6 (23)
	only for Y=03	0.6 (9)

Port sizes	V1 - V2	C1 - C2	
02	G 3/8	G 3/8	
03	G 1/2	G 1/2	

Preferred types

Type	Material number
05522710020000C	R930002345
05522710030000B	R930002349

Type	Material number

Dimensions

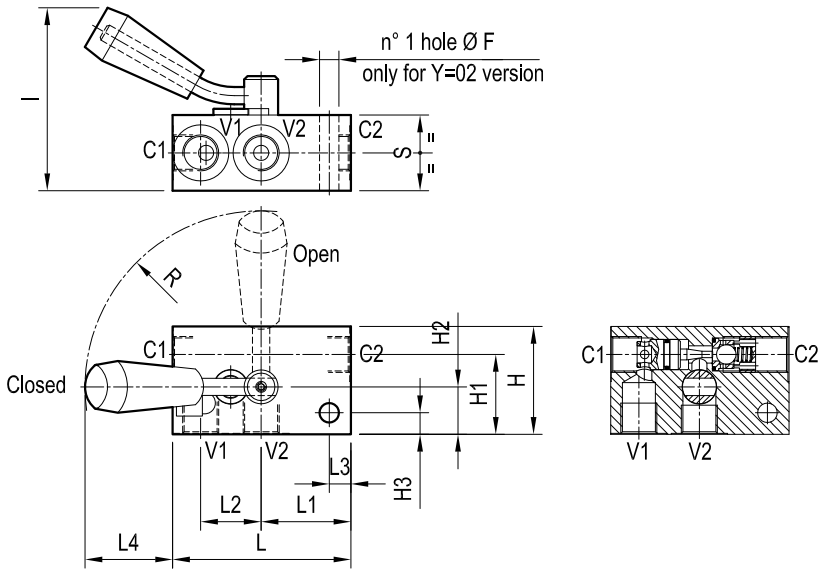

35 (1.38)	40.5 (1.6)	- -	35 (1.38)	40.5 (1.6)	90.5 (3.56)	85 (3.35)	- -	30 (1.18)	50 (1.97)	65 (2.56)	- -	82 (3.23)		G 1/2	3.6 : 1	1 (2.2)
35 (1.38)	40.5 (1.6)	10 (0.39)	28 (1.1)	41.5 (1.63)	82.5 (3.25)	85 (3.35)	10 (0.39)	22 (0.87)	37 (1.46)	50 (1.97)	9 (0.35)	82 (3.23)		G 3/8	5.4 : 1	0.6 (1.3)
S	L4	L3	L2	L1	L	I	H3	H2	H1	H	F	R		Y	Pilot ratio	Weight kg (lbs)

Pilot operated check, single

VSO-SE-DL-FCV-SX

05.52 - K - X - Y - Z

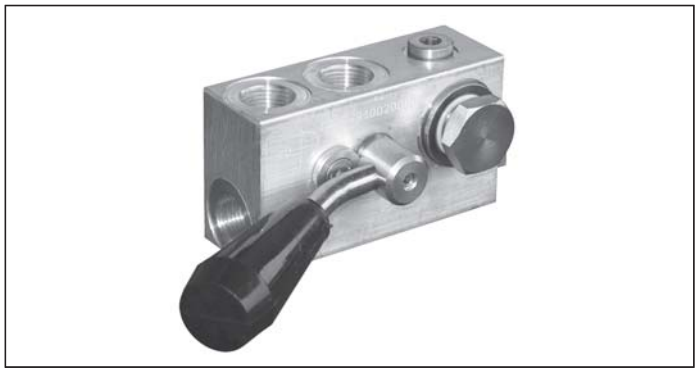

Technical data

Operating pressure	up to 210 bar (3000 psi)
Max. flow	30 l/min. (8 gpm)
Pilot ratio	5.4 : 1
Installation torque	50 - 55 Nm (37 - 41 ft-lbs)
Weight	0.6 kg (1.32 lbs)
Manifold material	Aluminium
Note: aluminium bodies are often strong enough for operating pressures exceeding 210 bar (3000 psi), depending from the fatigue life expected in the specific application. If in doubt, consult our Service Network.	
Fluid	Mineral oil (HL, HLP) according DIN 51524
Fluid temperature range	-30 °C to 100 (-22 to 212 °F)
Viscosity range	5 to 800 mm^2/s (cSt)
Recommended degree of fluid contamination	Class 19/17/14 according to ISO 4406
Other technical data	see data sheet 18350-50

Note: for applications outside these parameters, please consult us.

Description

A tap, manually controlled by the operator, allows inlet flow from V2 to pass through the check valve to C2: as a result, the motion of the actuator (typically the extension and positioning of an outrigger) happens under the operator's direct sight. The valve is normally closed (checked) and virtually leak-free from C2 to V2 in order to prevent reverse motion. Flow outlet from C2 to V2 and reverse motion (i.e. outrigger retraction or lifting up) is possible with manual tap open and if sufficient pilot pressure is present at V1-C1 so that the pilot piston may push the poppet from its seat. For compact assembly, the C2 port is banjo bolted directly onto the actuator port.

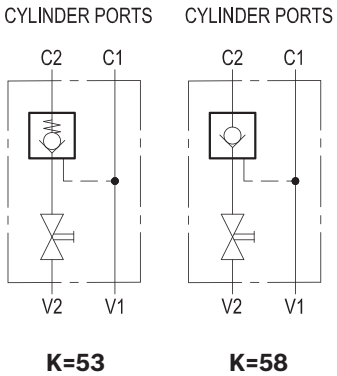

K=53 **K=58**

Characteristic curve

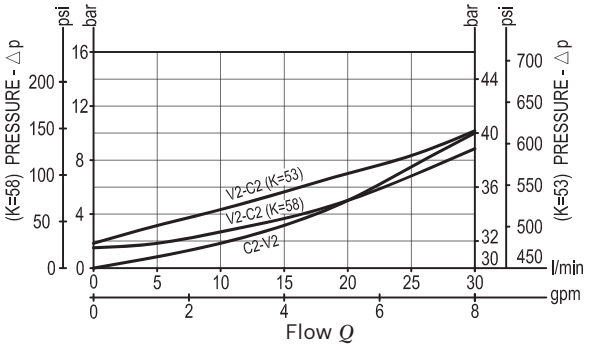

Dimensions [mm (inches)]

Ordering code

05.52	K	X	Y	Z

Pilot operated check, single manual shut-off

53 / **58** see hydraulic schemes

O-Ring on pilot piston

10 With O-Ring

		SPRINGS
		Cracking pressure bar (psi)
00	for K=58	1.6 (23)
	for K=53	32 (464)

Port sizes	V1 - V2	C1 - C2
02	G 3/8	G 3/8

Preferred types

Type	Material number
055253100200000	R930002363
055258100200000	R930002367

Type	Material number

Dimensions

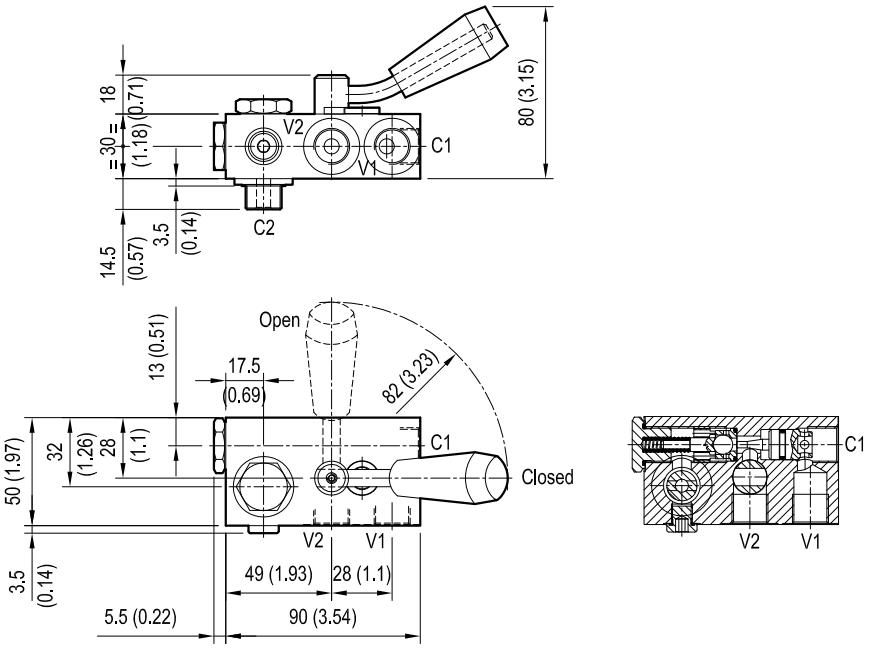

Pilot operated check, single manual shut-off

VSO-SE-DL-FCV-DX

05.52 - K - X - Y - Z

Technical data

Operating pressure	up to 210 bar (3000 psi)
Max. flow	30 l/min. (8 gpm)
Pilot ratio	5.4 : 1
Installation torque	50 - 55 Nm (37 - 41 ft-lbs)
Weight	0.6 kg (1.32 lbs)
Manifold material	Aluminium
Note: aluminium bodies are often strong enough for operating pressures exceeding 210 bar (3000 psi), depending from the fatigue life expected in the specific application. If in doubt, consult our Service Network.	
Fluid	Mineral oil (HL, HLP) according DIN 51524
Fluid temperature range	-30 °C to 100 (-22 to 212 °F)
Viscosity range	5 to 800 mm^2/s (cSt)
Recommended degree of fluid contamination	Class 19/17/14 according to ISO 4406
Other technical data	see data sheet 18350-50

Note: for applications outside these parameters, please consult us.

Description

A tap, manually controlled by the operator, allows inlet flow from V2 to pass through the check valve to C2: as a result, the motion of the actuator (typically the extension and positioning of an outrigger) happens under the operator's direct sight. The valve is normally closed (checked) and virtually leak-free from C2 to V2 in order to prevent reverse motion. Flow outlet from C2 to V2 and reverse motion (i.e. outrigger retraction or lifting up) is possible with manual tap open and if sufficient pilot pressure is present at V1-C1 so that the pilot piston may push the poppet from its seat. For compact assembly, the C2 port is banjo bolted directly onto the actuator port.

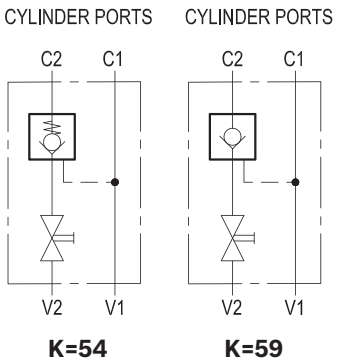

Characteristic curve

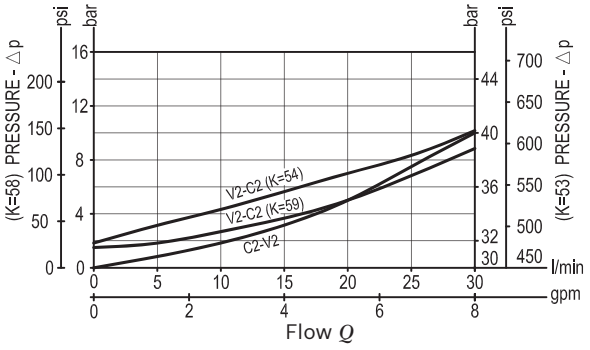

Dimensions [mm (inches)]

Ordering code

05.52	K	X	Y	Z

Pilot operated check, single manual shut-off

54 / **59** — see hydraulic schemes

O-Ring on pilot piston

10 With O-Ring

		SPRINGS
		Cracking pressure bar (psi)
00	for K=59	1.6 (23)
	for K=54	32 (464)

Port sizes	V1 - V2	C1 - C2
02	G 3/8	G 3/8

Preferred types

Type	Material number
055254100200000	R930002365
055259100200000	R930002368

Type	Material number

Dimensions

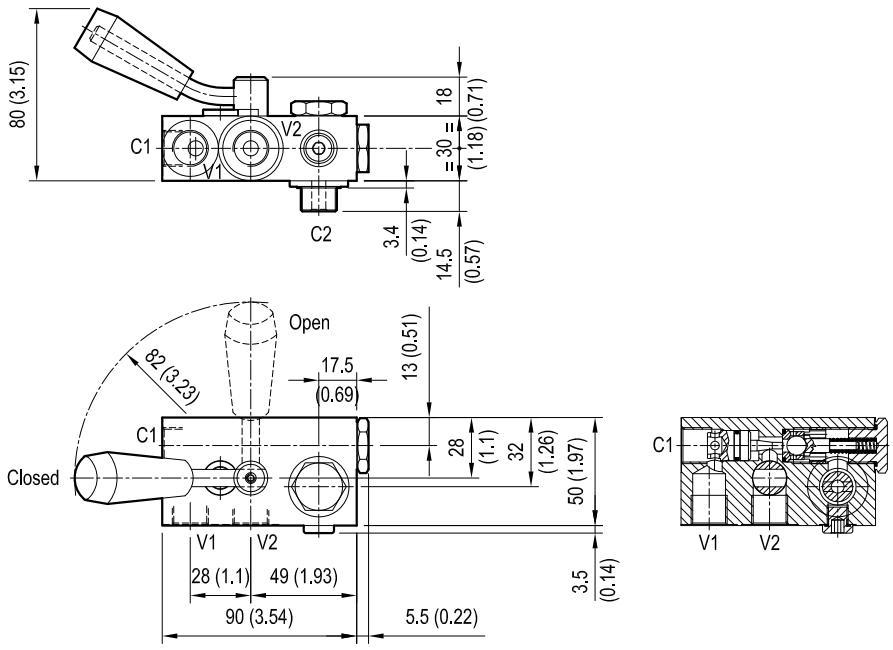

Pilot operated check, dual

VSO-DE

05.53.43 - X - Y - Z

Technical data

Operating pressure	up to 210 bar (3000 psi)
Max. flow	30 l/min. (8 gpm)
Pilot ratio	7 : 1
Weight	0.9 kg (1.98 lbs)
Manifold material	Aluminium
Note: aluminium bodies are often strong enough for operating pressures exceeding 210 bar (3000 psi), depending from the fatigue life expected in the specific application. If in doubt, consult our Service Network.	
Fluid	Mineral oil (HL, HLP) according DIN 51524
Fluid temperature range	-30 °C to 100 (-22 to 212 °F)
Viscosity range	10 to 500 mm^2/s (cSt)
Recommended degree of fluid contamination	Class 19/17/14 according to ISO 4406
Other technical data	see data sheet 18350-50
The version with O-Ring and heavier spring is generally recommended.	

Note: for applications outside these parameters, please consult us.

Description

Flow is allowed to pass in one direction (V1 to C1 or V2 to C2), then the valve remains closed (checked) in both reverse directions (C1 to V1 or C2 to V2) in order to hold and lock in position the cylinder or other actuators; reverse flow is possible only when sufficient pilot pressure is applied at V2 or V1, which act as cross connected pilot ports, and the pilot piston lifts the poppet from its seat overcoming cylinder port pressure.

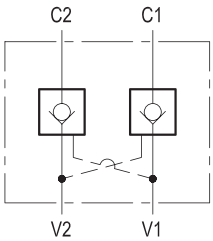

Characteristic curve

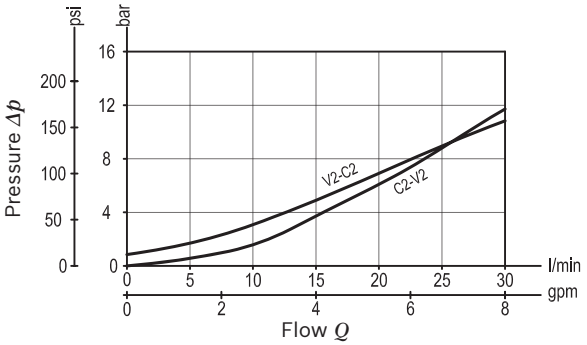

Dimensions [mm (inches)]

Ordering code

05.53.43	X	Y	Z

Pilot operated check, dual

O-Ring on pilot piston

00	No O-Ring
10	With O-Ring

		SPRINGS
		Cracking pressure bar (psi)
00	only for X=00	1 (15)
01	only for X=10	4.5 (65)

Port sizes	V1 - V2	C1 - C2	
97	G 3/8	G 3/8	

Preferred types

Type	Material number
055343009700000	R930002452
055343109701000	R930002456

Type	Material number

Dimensions

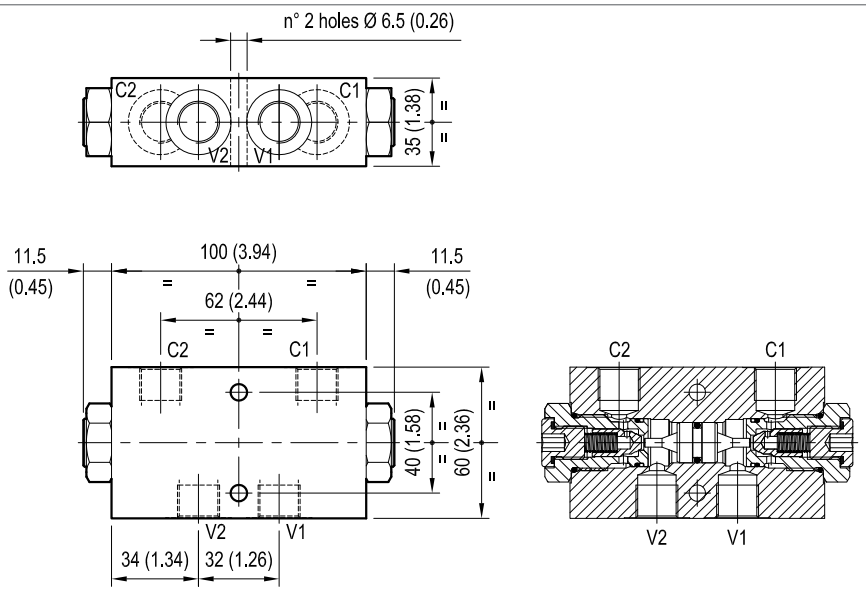

Pilot operated check, dual

VSO-DE

05.53.01 - X - 03 - Z

Description

Flow is allowed to pass in one direction (V1 to C1 or V2 to C2), then the valve remains closed (checked) in both reverse directions (C1 to V1 or C2 to V2) in order to hold and lock in position the cylinder or other actuators; reverse flow is possible only when sufficient pilot pressure is applied at V2 or V1, which act as cross connected pilot ports, and the pilot piston lifts the poppet from its seat overcoming cylinder port pressure.

Technical data

Operating pressure	up to 210 bar (3000 psi)
Max. flow	50 l/min. (13 gpm)
Weight	1.06 kg (2.34 lbs)
Manifold material	Aluminium
Note: aluminium bodies are often strong enough for operating pressures exceeding 210 bar (3000 psi), depending from the fatigue life expected in the specific application. If in doubt, consult our Service Network.	
Fluid	Mineral oil (HL, HLP) according DIN 51524
Fluid temperature range	-30 °C to 100 (-22 to 212 °F)
Viscosity range	10 to 500 mm^2/s (cSt)
Recommended degree of fluid contamination	Class 19/17/14 according to ISO 4406
Other technical data	see data sheet 18350-50
The version with O-Ring and heavier spring is generally recommended.	

Note: for applications outside these parameters, please consult us.

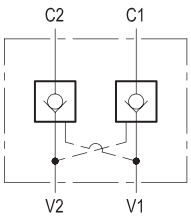

Characteristic curve

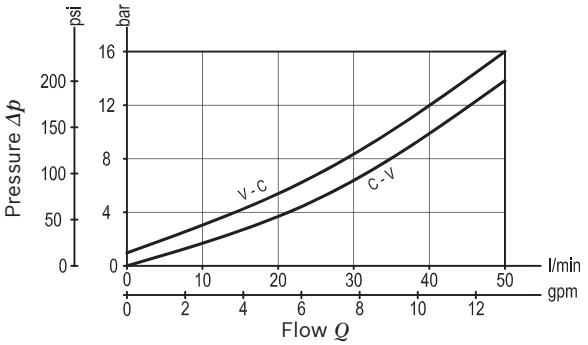

Ordering code

05.53.01	X	03	Z

Pilot operated check, dual

O-Ring on pilot piston	Pilot ratio
00 No O-Ring	3.2 : 1
10 With O-Ring	3.2 : 1
25 With O-Ring	6 : 1

Port sizes	V1 - V2	C1 - C2	
03	G 1/2	G 1/2	

		SPRINGS
		Cracking pressure bar (psi)
00	only for X=00	1 (15)
01	only for X=00, X=10 and X=25	8 (116)

Preferred types

Type	Material number
055301000300000	R930002391
055301000301000	R930002392

Type	Material number
055301100301000	R930002401
055301250301000	R930002404

Dimensions

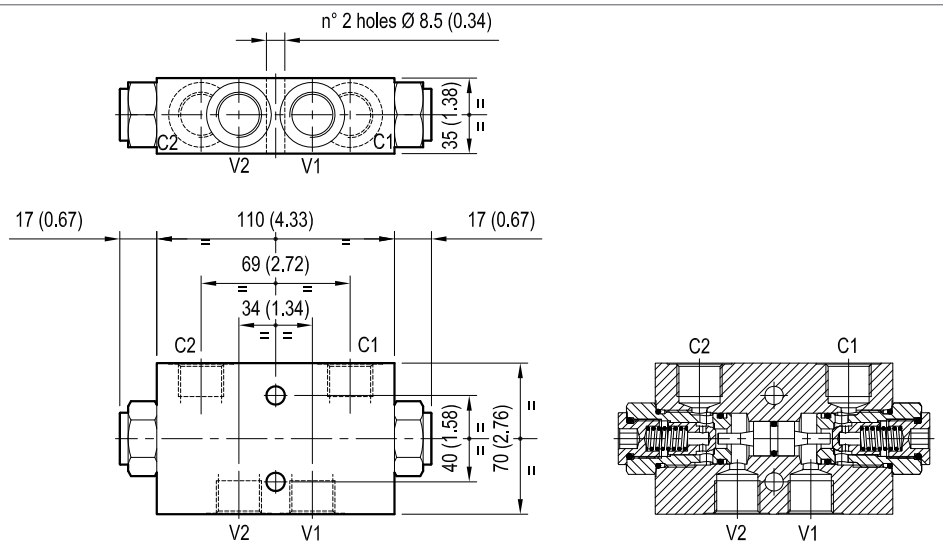

Pilot operated check, dual

VSO-DE

05.53.01 - X - 04 - Z

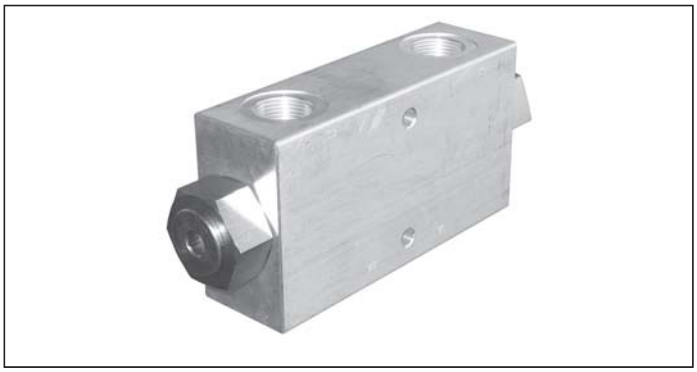

Description

Flow is allowed to pass in one direction (V1 to C1 or V2 to C2), then the valve remains closed (checked) in both reverse directions (C1 to V1 or C2 to V2) in order to hold and lock in position the cylinder or other actuators; reverse flow is possible only when sufficient pilot pressure is applied at V2 or V1, which act as cross connected pilot ports, and the pilot piston lifts the poppet from its seat overcoming cylinder port pressure.

Technical data

Operating pressure	up to 210 bar (3000 psi)
Max. flow	100 l/min. (26 gpm)
Pilot ratio	4 : 1
Weight	2.6 kg (5.7 lbs)
Manifold material	Aluminium
Note: aluminium bodies are often strong enough for operating pressures exceeding 210 bar (3000 psi), depending from the fatigue life expected in the specific application. If in doubt, consult our Service Network.	
Fluid	Mineral oil (HL, HLP) according DIN 51524
Fluid temperature range	-30 °C to 100 (-22 to 212 °F)
Viscosity range	10 to 500 mm^2/s (cSt)
Recommended degree of fluid contamination	Class 19/17/14 according to ISO 4406
Other technical data	see data sheet 18350-50
The version with O-Ring and heavier spring is generally recommended.	

Note: for applications outside these parameters, please consult us.

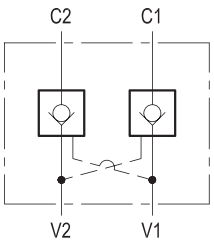

Characteristic curve

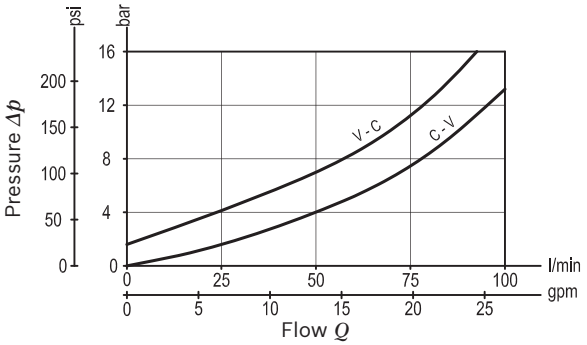

Ordering code

05.53.01	X	04	Z

Pilot operated check, dual

O-Ring on pilot piston

00	No O-Ring
10	With O-Ring

		SPRINGS
		Cracking pressure bar (psi)
00	only for X=00	1.5 (22)
01	only for X=00 and X=10	8 (116)

Port sizes	V1 - V2	C1 - C2	
04	G 3/4	G 3/4	

Preferred types

Type	Material number
055301000400000	R930002396
055301000401000	R930002397

Type	Material number
055301100401000	R930002403

Dimensions

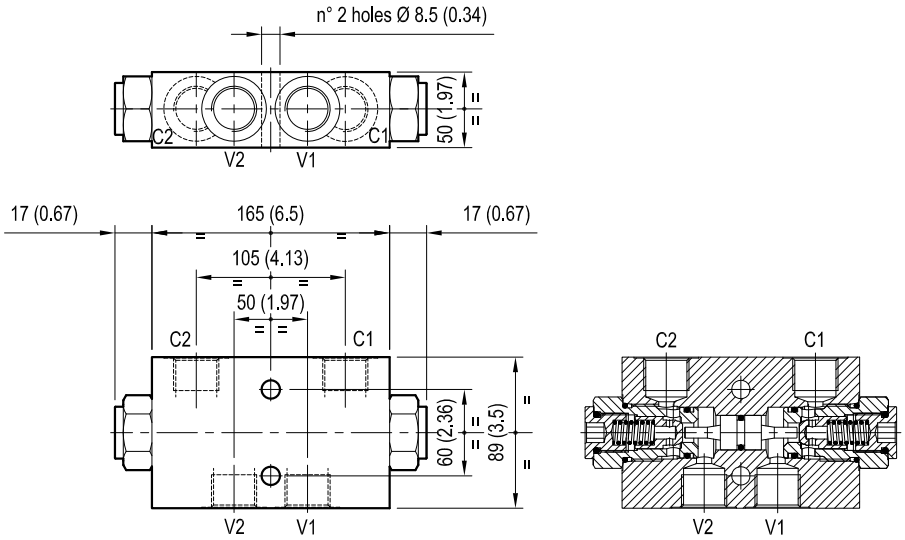

Pilot operated check, dual

VSO-DE-FC2

05.53.44 - X - Y - Z

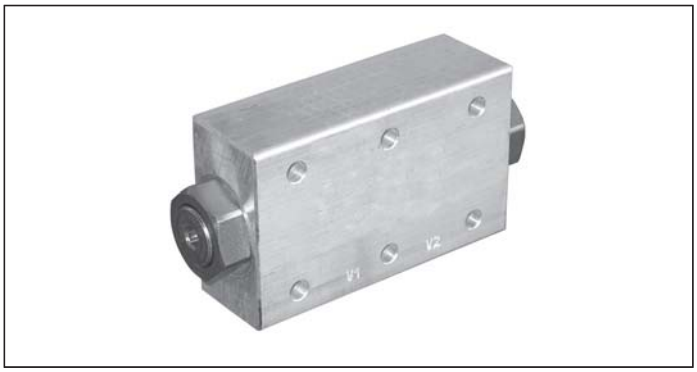

Description

Flow is allowed to pass in one direction (V1 to C1 or V2 to C2), then the valve remains closed (checked) in both reverse directions (C1 to V1 or C2 to V2) in order to hold and lock in position the cylinder or other actuators; reverse flow is possible only when sufficient pilot pressure is applied at V2 or V1, which act as cross connected pilot ports, and the pilot piston lifts the poppet from its seat overcoming cylinder port pressure. For better safety and compact assembly, C1 and C2 ports are flanged (gasket mounted) directly on the actuator.

Technical data

Operating pressure	up to 210 bar (3000 psi)
Max. flow	30 l/min. (8 gpm)
Pilot ratio	7 : 1
Weight	0.9 kg (1.98 lbs)
Manifold material	Aluminium
Note: aluminium bodies are often strong enough for operating pressures exceeding 210 bar (3000 psi), depending from the fatigue life expected in the specific application. If in doubt, consult our Service Network.	
Flange kit code[1)]	E00000000000029 (R930001056)
Fluid	Mineral oil (HL, HLP) according DIN 51524
Fluid temperature range	-30 °C to 100 (-22 to 212 °F)
Viscosity range	10 to 500 mm^2/s (cSt)
Recommended degree of fluid contamination	Class 19/17/14 according to ISO 4406
Other technical data	see data sheet 18350-50
The version with O-Ring and heavier spring is generally recommended.	

Note: for applications outside these parameters, please consult us.

[1)] Seal for 10 valves.

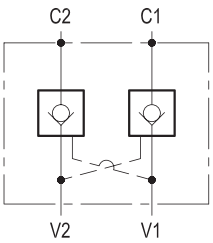

Characteristic curve

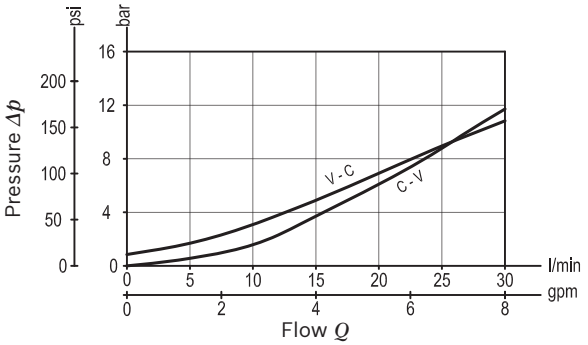

Ordering code

05.53.44	X	Y	Z

Pilot operated check, dual

O-Ring on pilot piston

00	No O-Ring
10	With O-Ring

		SPRINGS
		Cracking pressure bar (psi)
00	only for X=00	1 (15)
01	only for X=00 and X=10	4.5 (65)

Port sizes	V1 - V2	C1 - C2	
02	G 3/8	Ø 6 (0.24)	

Preferred types

Type	Material number
055344000200000	R930002457
055344000201000	R930002459

Type	Material number
055344100201000	R930002461

Dimensions

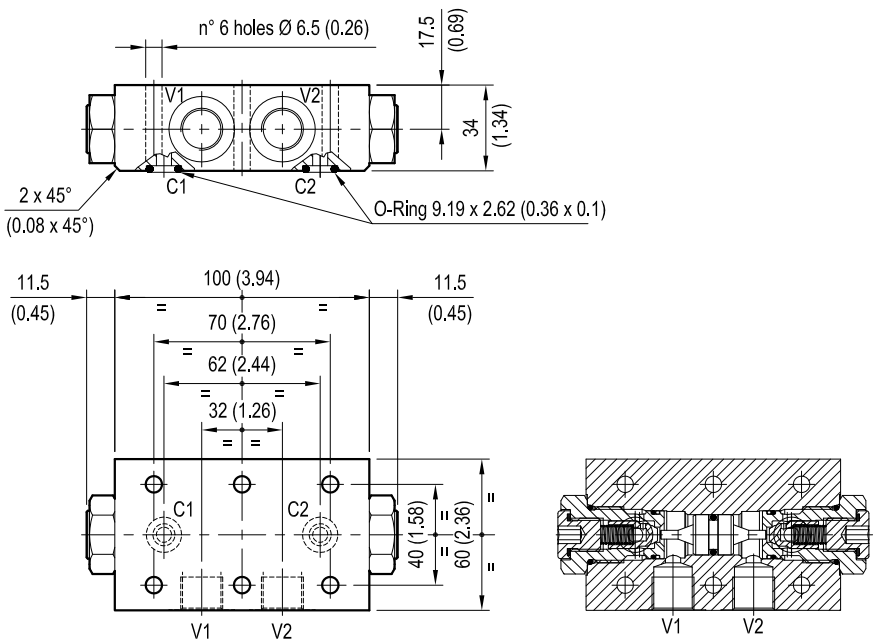

Pilot operated check, dual

VSO-DE-FC2

05.53.02 - X - Y - Z

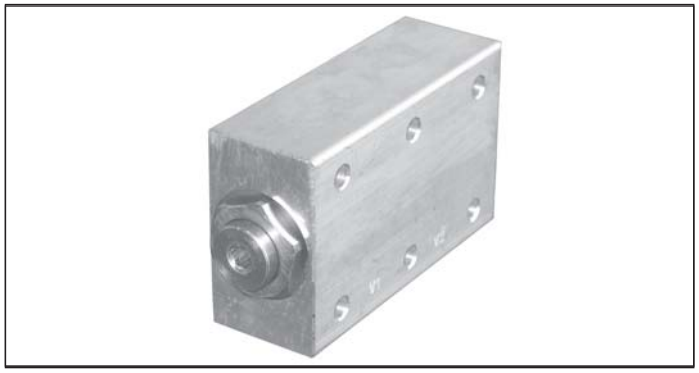

Description

Flow is allowed to pass in one direction (V1 to C1 or V2 to C2), then the valve remains closed (checked) in both reverse directions (C1 to V1 or C2 to V2) in order to hold and lock in position the cylinder or other actuators; reverse flow is possible only when sufficient pilot pressure is applied at V2 or V1, which act as cross connected pilot ports, and the pilot piston lifts the poppet from its seat overcoming cylinder port pressure. For better safety and compact assembly, C1 and C2 ports are flanged (gasket mounted) directly on the actuator.

Technical data

Operating pressure	up to 210 bar (3000 psi)
Max. flow	50 l/min. (13 gpm)
Weight	1.06 kg (2.3 lbs)
Manifold material	Aluminium
Note: aluminium bodies are often strong enough for operating pressures exceeding 210 bar (3000 psi), depending from the fatigue life expected in the specific application. If in doubt, consult our Service Network.	
Flange seal kit[1)]	E00000000000008 (R930004538)
Fluid	Mineral oil (HL, HLP) according DIN 51524
Fluid temperature range	-30 °C to 100 (-22 to 212 °F)
Viscosity range	10 to 500 mm^2/s (cSt)
Recommended degree of fluid contamination	Class 19/17/14 according to ISO 4406
Other technical data	see data sheet 18350-50
The version with O-Ring and heavier spring is generally recommended.	

Note: for applications outside these parameters, please consult us.

[1)] Seal for 10 valves

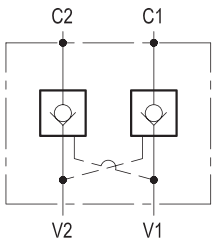

Characteristic curve

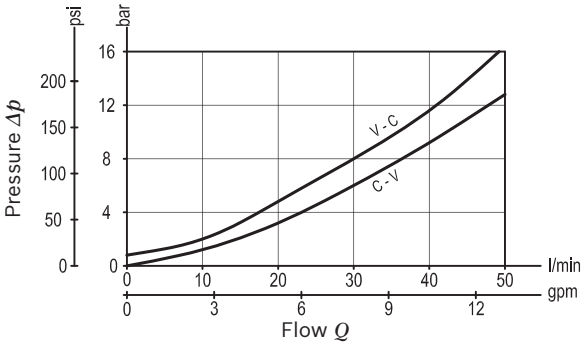

Ordering code

05.53.02	X	Y	Z

Pilot operated check, dual

O-Ring on pilot piston	Pilot ratio
00 No O-Ring	3.2 : 1
10 With O-Ring	3.2 : 1
25 With O-Ring	6 : 1

Port sizes	V1 - V2	C1 - C2	
03	G 1/2	Ø7 (0.28)	

		SPRINGS
		Cracking pressure bar (psi)
00	only for X=00	1 (15)
01	only for X=00, X=10 and X=25	8 (116)

Preferred types

Type	Material number
055302000300000	R930002408
055302000301000	R930002409

Type	Material number
055302100301000	R930002412
055302250301000	R930002416

Dimensions

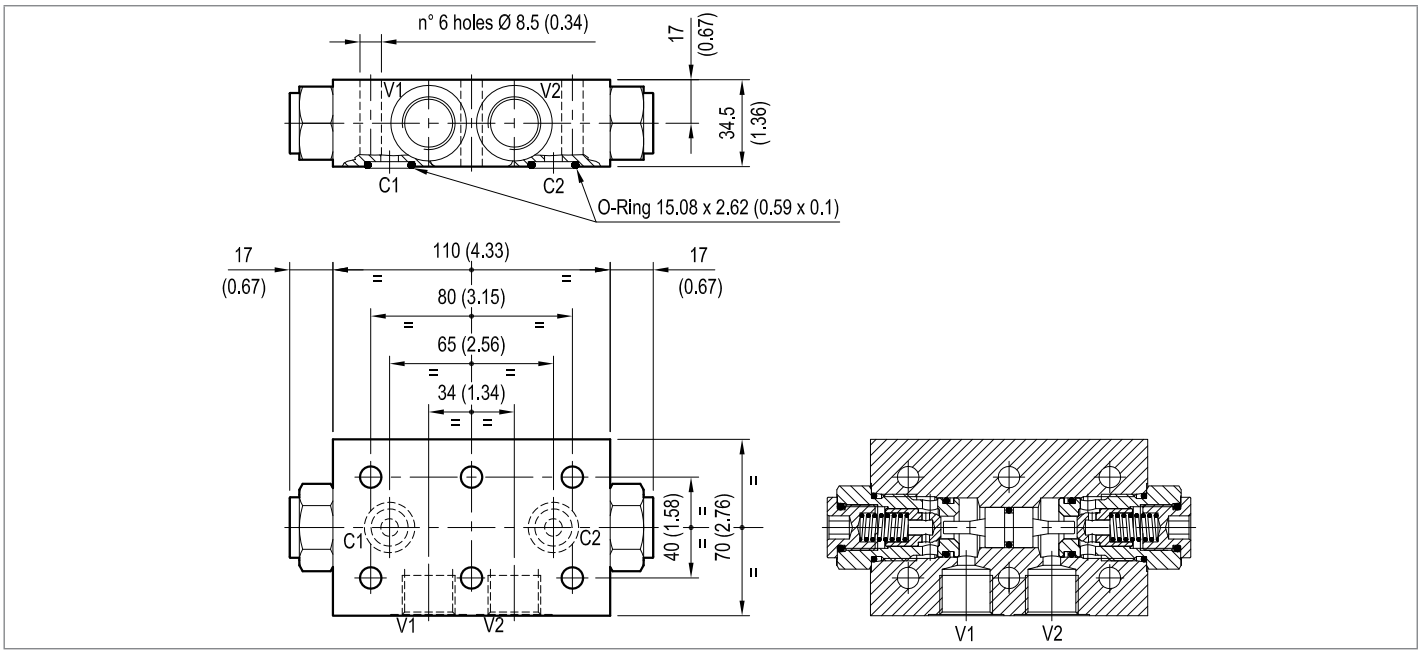

Pilot operated check, dual

VSO-DE-DL

05.53.03 - X - 09 - Z

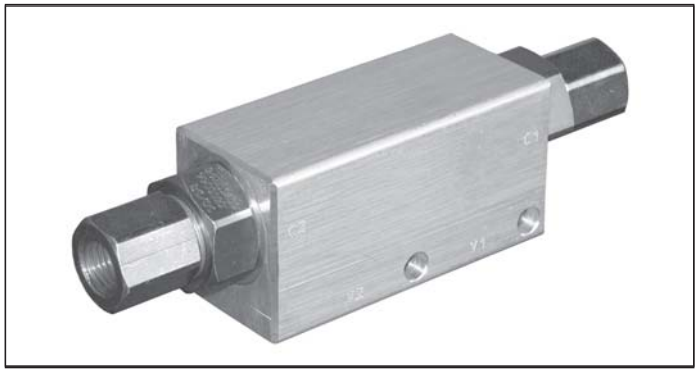

Description

Flow is allowed to pass in one direction (V1 to C1 or V2 to C2), then the valve remains closed (checked) in both reverse directions (C1 to V1 or C2 to V2) in order to hold and lock in position the cylinder or other actuators; reverse flow is possible only when sufficient pilot pressure is applied at V2 or V1, which act as cross connected pilot ports, and the pilot piston lifts the poppet from its seat overcoming cylinder port pressure.

Technical data

Max operating pressure port C2-C1	350 bar (5000 psi)
Max operating pressure port V2-V1	210 bar (3000 psi)
Max. flow	20 l/min. (5 gpm)
Weight	0.7 kg (1.5 lbs)
Manifold material	Aluminium
Note: aluminium bodies are often strong enough for operating pressures exceeding 210 bar (3000 psi), depending from the fatigue life expected in the specific application. If in doubt, consult our Service Network.	
Fluid	Mineral oil (HL, HLP) according DIN 51524
Fluid temperature range	-30 °C to 100 (-22 to 212 °F)
Viscosity range	10 to 500 mm^2/s (cSt)
Recommended degree of fluid contamination	Class 19/17/14 according to ISO 4406
Other technical data	see data sheet 18350-50
The version with O-Ring and heavier spring is generally recommended.	

Note: for applications outside these parameters, please consult us.

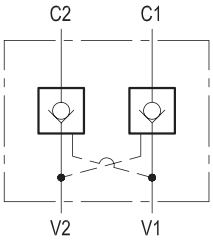

Characteristic curve

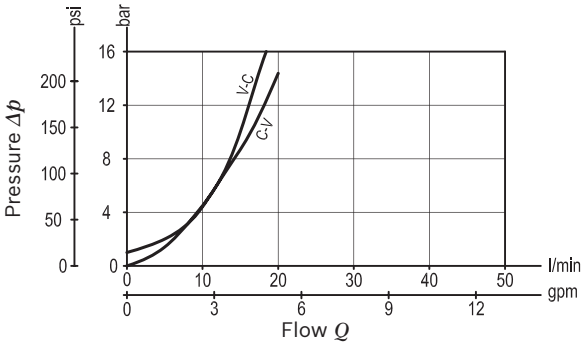

Ordering code

05.53.03	X	09	Z

Pilot operated check, dual

O-Ring on pilot piston	Pilot ratio
00 No O-Ring	4 : 1
10 With O-Ring	4 : 1
37 No O-Ring	9 : 1

Port sizes	V1 - V2	C1 - C2
09	G 1/4	G 1/4

		SPRINGS
		Cracking pressure bar (psi)
00	only for X=00 and X=37	3 (44)
01	only for X=00, X=10 and X=37	8 (116)

Preferred types

Type	Material number
055303000900000	R930002424
055303370900000	R930002437
055303100901000	R930002433

Type	Material number
055303370901000	R930002438
055303000901000	R930002425

Dimensions

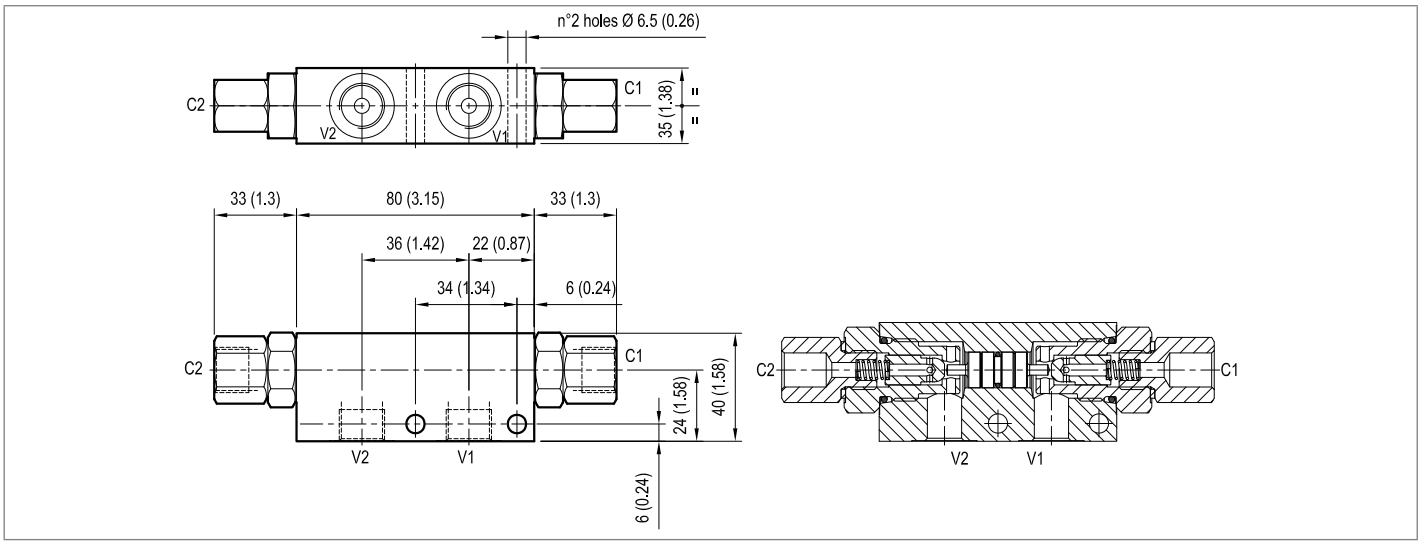

Pilot operated check, dual

VSO-DE-L

05.53.03 - X - 02 - Z

Description

Flow is allowed to pass in one direction (V1 to C1 or V2 to C2), then the valve remains closed (checked) in both reverse directions (C1 to V1 or C2 to V2) in order to hold and lock in position the cylinder or other actuators; reverse flow is possible only when sufficient pilot pressure is applied at V2 or V1, which act as cross connected pilot ports, and the pilot piston lifts the poppet from its seat overcoming cylinder port pressure.

Technical data

Max operating pressure port C2-C1	350 bar (5000 psi)
Max operating pressure port V2-V1	210 bar (3000 psi)
Max. flow	50 l/min. (13 gpm)
Pilot ratio	3.2 : 1
Weight	1.15 kg (2.5 lbs)
Manifold material	Aluminium
Note: aluminium bodies are often strong enough for operating pressures exceeding 210 bar (3000 psi), depending from the fatigue life expected in the specific application. If in doubt, consult our Service Network.	
Fluid	Mineral oil (HL, HLP) according DIN 51524
Fluid temperature range	-30 °C to 100 (-22 to 212 °F)
Viscosity range	10 to 500 mm^2/s (cSt)
Recommended degree of fluid contamination	Class 19/17/14 according to ISO 4406
Other technical data	see data sheet 18350-50

Note: for applications outside these parameters, please consult us.

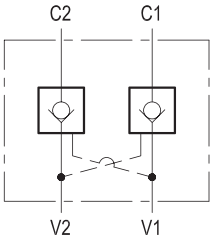

Characteristic curve

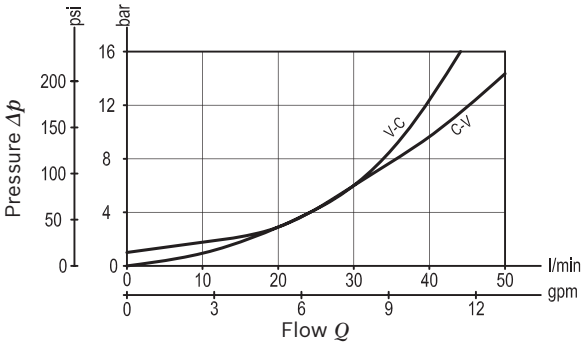

Dimensions [mm (inches)]

Ordering code

05.53.03	X	02	Z

Pilot operated check, dual

O-Ring on pilot piston

00 No O-Ring

	SPRINGS
	Cracking pressure bar (psi)
00	8 (116)

Port sizes	V1 - V2	C1 - C2	
02	G 3/8	G 3/8	

Preferred types

Type	Material number
05530300020000A	R930002419

Type	Material number

Dimensions

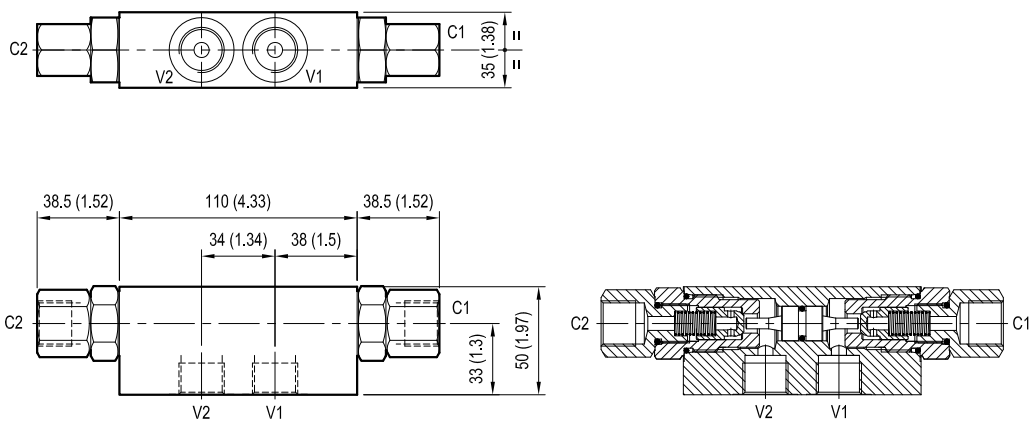

Pilot operated check, dual

VSO-DE-L

05.53.03 - X - 03 - Z

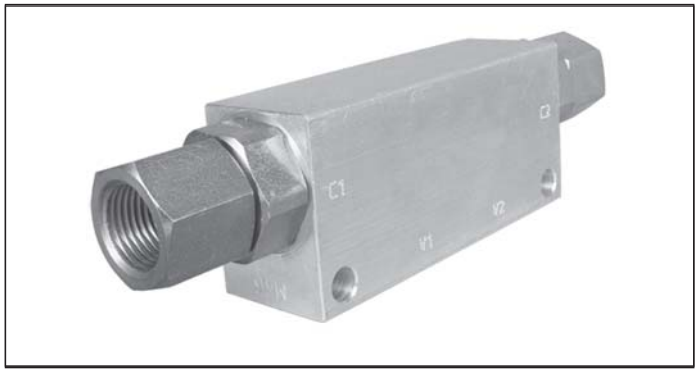

Description

Flow is allowed to pass in one direction (V1 to C1 or V2 to C2), then the valve remains closed (checked) in both reverse directions (C1 to V1 or C2 to V2) in order to hold and lock in position the cylinder or other actuators; reverse flow is possible only when sufficient pilot pressure is applied at V2 or V1, which act as cross connected pilot ports, and the pilot piston lifts the poppet from its seat overcoming cylinder port pressure.

Technical data

Max operating pressure port C2-C1	350 bar (5000 psi)
Max operating pressure port V2-V1	210 bar (3000 psi)
Max. flow	50 l/min. (13 gpm)
Weight	1.15 kg (2.5 lbs)
Manifold material	Aluminium
Note: aluminium bodies are often strong enough for operating pressures exceeding 210 bar (3000 psi), depending from the fatigue life expected in the specific application. If in doubt, consult our Service Network.	
Fluid	Mineral oil (HL, HLP) according DIN 51524
Fluid temperature range	-30 °C to 100 (-22 to 212 °F)
Viscosity range	10 to 500 mm²/s (cSt)
Recommended degree of fluid contamination	Class 19/17/14 according to ISO 4406
Other technical data	see data sheet 18350-50
The version with O-Ring and heavier spring is generally recommended.	

Note: for applications outside these parameters, please consult us.

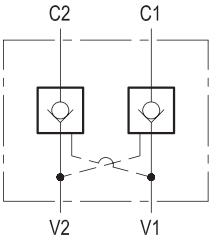

Characteristic curve

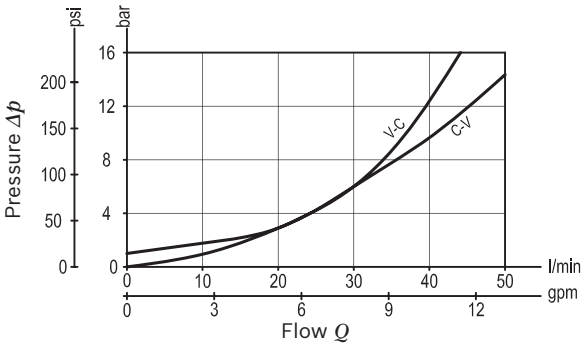

Ordering code

05.53.03	X	03	Z

Pilot operated check, dual

O-Ring on pilot piston	Pilot ratio
00 No O-Ring	3.2 : 1
10 With O-Ring	3.2 : 1
25 With O-Ring	6 : 1

Port sizes	V1 - V2	C1 - C2	
03	G 1/2	G 1/2	

		SPRINGS
		Cracking pressure bar (psi)
00	only for X=00 and X=25	1 (15)
01	only for X=00, X=10 and X=25	8 (116)

Preferred types

Type	Material number
05530300030000A	R930002420
05530300030100B	R930002421
05530310030100A	R930002431

Type	Material number
055303250300000	R930002435
05530325030100A	R930002436

Dimensions

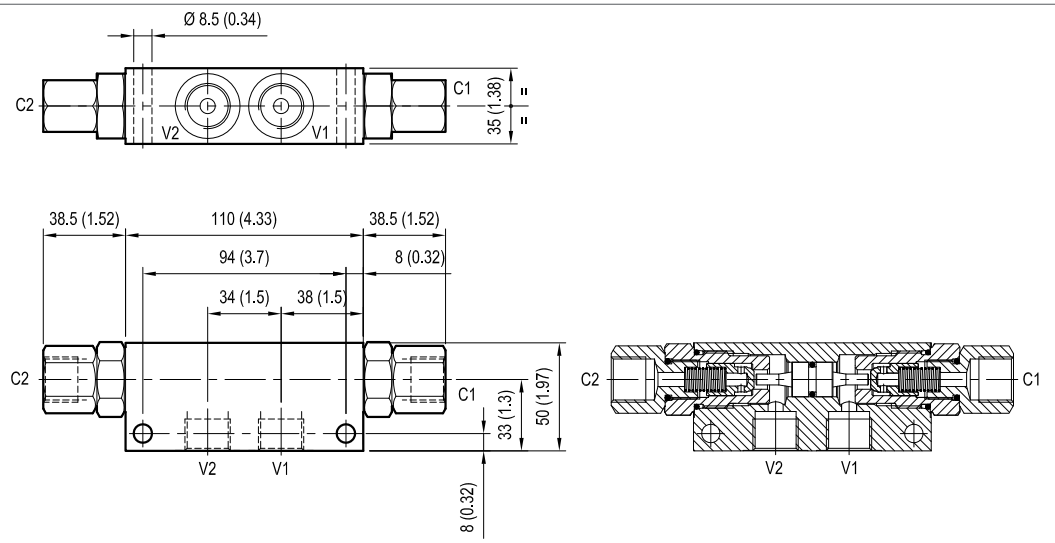

Pilot operated check, dual

A-VSO-DE-LB

08.53.57 - X - Y - Z

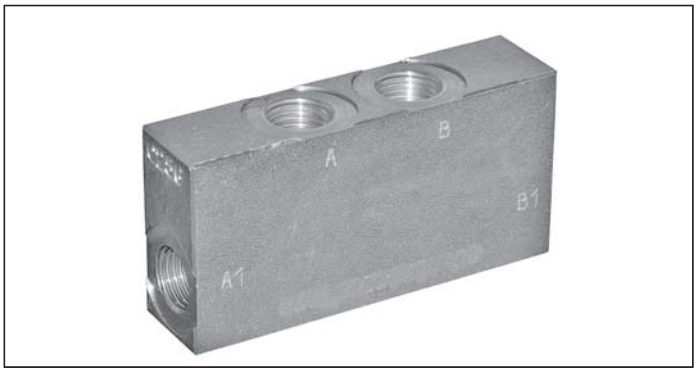

Technical data

Max. operating pressure	350 bar (5000 psi)
Max. flow	20 l/min. (5 gpm)
Pilot ratio	4 : 1
Weight	0.45 kg (1 lbs)
Manifold material	Zinc plated steel
Fluid	Mineral oil (HL, HLP) according DIN 51524
Fluid temperature range	-30 °C to 100 (-22 to 212 °F)
Viscosity range	5 to 800 mm^2/s (cSt)
Recommended degree of fluid contamination	Class 19/17/14 according to ISO 4406
Other technical data	see data sheet 18350-50

Note: for applications outside these parameters, please consult us.

Description

Flow is allowed to pass in one direction (A to A1 or B to B1), then the valve remains closed (checked) in both reverse directions (A1 to A or B1 to B) in order to hold and lock in position the cylinder or other actuators; reverse flow is possible only when sufficient pilot pressure is applied at A or B, which act as cross connected pilot ports, and the pilot piston lifts the poppet from its seat overcoming cylinder port pressure.

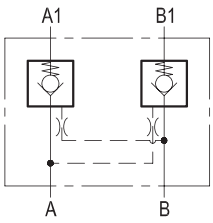

Characteristic curve

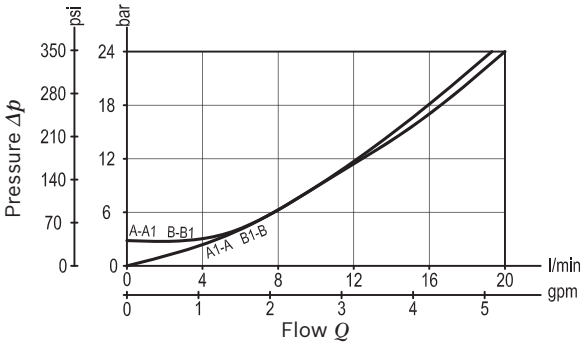

Dimensions [mm (inches)]

Ordering code

08.53.57	X	Y	Z

Pilot operated check, dual

O-Ring on pilot piston

20 With damping, no O-Ring

30 With damping, with O-Ring

Port sizes	A - B	A1 - B1	
09	G 1/4	G 1/4	

	SPRINGS
	Cracking pressure bar (psi)
00	3 (44)

Preferred types

Type	Material number
085357200900000	R930004079
085357300900000	R930004080

Type	Material number

Dimensions

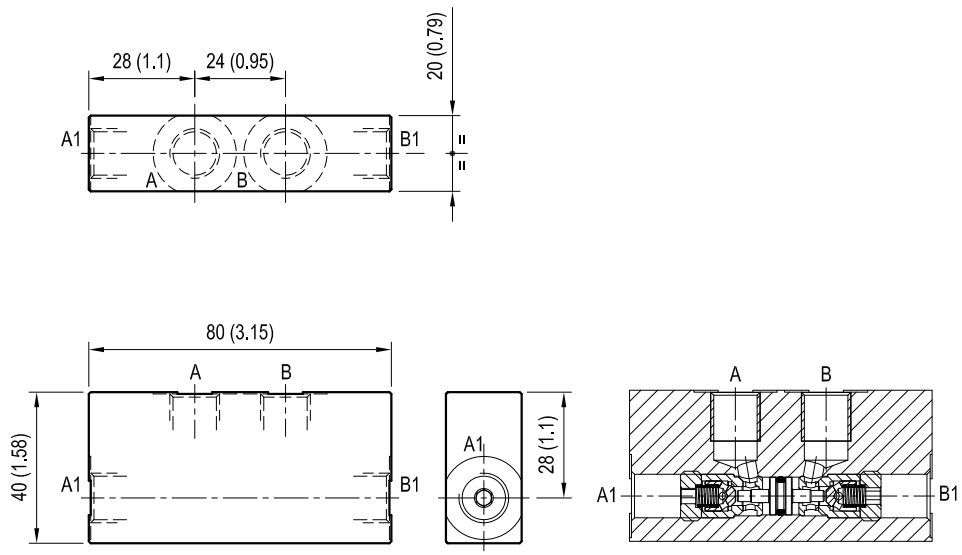

Load holding/motion control
Counterbalance valves

Designation	Description	Ports	Code	Data sheet	Page
Single, standard configuration	A-VBSO-SE-78	G 1/4	083520XYZ	18307-34	77
Single, standard configuration	A-VBSO-SE-78-PL	G 1/4	084985XYZ	18307-35	79
Single, standard configuration	A-VBSO-SE-78-PL-FC2	Flangeable	084968XYZ	18307-36	81
Single, standard configuration	A-VBSO-SE-30	G 1/4, G 3/8, G 1/2	084101XYZ	18307-37	83
Single, standard configuration	A-VBSO-SE-30-FC1	Flangeable	084102XYZ	18307-38	85
Single, standard configuration	A-VBSO-SE-30-PI-PL	G 3/8, G 1/2	083959XYZ	18307-32	87
Single, standard configuration	A-VBSO-SE30-FC1	Flangeable	083962XYZ	18307-31	89
Single, standard configuration	A-VBSO-SE-30-FC2-PI-PL	Flangeable	083960XYZ	18307-33	91
Single, standard configuration	A-VBSO-SE-30-SAF	G 1/2	084772XYZ	18307-42	93
Single, standard configuration	A-VBSO-SE-90-PL	G 1/2	083928XYZ	18308-45	95
Single, standard configuration	VBSO-SE	G 1/2, G 3/4	054101XYZ	18307-43	97
Single, standard configuration	A-VBSO-SE-33-PL	G 1/2, G 3/4	084585XYZ	18307-44	99
Single, standard configuration	A-VBSO-SE-33-PL-FC1	Flangeable	084587XYZ	18307-45	101
Single, standard configuration	A-VBSO-SE-33-PL-FC2	Flangeable	084594XYZ	18307-46	103
Single, standard configuration	A-VBSO-SE-42	G 1	083930XYZ	18308-46	105
Single, relief compensated	A-VBSO-SE-CC-78	G 1/4	083927XYZ	18308-44	107
Single, relief compensated	A-VBSO-SE-CC-30	G 3/8, G 1/2	084396XYZ	18307-47	109
Single, relief compensated	A-VBSO-SE-CC-30-PL	G 3/8, G 1/2	084517XYZ	18307-48	111
Single, relief compensated	A-VBSO-SE-CC-30-PL-FC1	Flangeable	084519XYZ	18307-49	113

Load holding/motion control

Counterbalance valves

Designation	Description	Ports	Code	Data sheet	Page
Single, relief compensated	A-VBSO-SE-CC-30-PL-FC2	Flangeable	084521XYZ	18307-50	115
Single, relief compensated	VBSO-SE-CC	G 1/2, G 3/4	054106XYZ	18307-51	117
Single counterbalance, vented	A-VBSO-SE-CCAP-78	G 1/4	084598XYZ	18308-48	119
Single counterbalance, vented	A-VBSO-SE-CCAP-33-PL	G 1/2, G 3/4	084586XYZ	18307-52	121
Single counterbalance, vented	A-VBSO-SE-CCAP-33-PL-FC1	Flangeable	084588XYZ	18307-53	123
Single counterbalance, vented	A-VBSO-SE-CCAP-33-PL-FC2	Flangeable	084592XYZ	18307-54	125
Single counterbalance, vented	A-VBSO-SE-CCAP-42	G 1	084991XYZ	18308-47	127
Dual, standard configuration	A-VBSO-DE-78	G 1/4	084611XYZ	18307-55	129
Dual, standard configuration	A-VBSO-DE-78-FC2	Flangeable	084636XYZ	18307-56	131
Dual, standard configuration	VBSO-DE-NN	G 3/8	054247XYZ	18307-57	133
Dual, standard configuration	VBSO-DE-NN-FC2	Flangeable	054248XYZ	18307-58	135
Dual, standard configuration	A-VBSO-DE-30-PI	G 3/8, G 1/2	084811XYZ	18307-72	137
Dual, standard configuration	A-VBSO-DE-30-FC1	Flangeable	084430XYZ	18307-60	139
Dual, standard configuration	A-VBSO-DE-30-FCB-PI	Flangeable	084812XYZ	18307-73	141
Dual, standard configuration	A-VBSO-DE-SAF	G 1/2	084460XYZ	18307-62	143
Dual, standard configuration	A-VBSO-DE-90-FC2	Flangeable	084489XYZ	18308-63	145
Dual, standard configuration	VBSO-DE	G 1/2, G 3/4	054201XYZ	18307-63	147
Dual, standard configuration	VBSO-DE-FC2	Flangeable	054206XYZ	18307-64	149
Dual, standard configuration	VBSO-DE-33	G 1/2, G 3/4	054432XYZ	18307-65	151
Dual, standard configuration	VBSO-DE-33	G 1/2, G 3/4	05443213YZ	18308-65	153

Load holding/motion control

Counterbalance valves

Designation	Description	Ports	Code	Data sheet	Page
Dual, standard configuration	VBSO-DE-33-FC2	Flangeable	054433XYZ	18307-66	155
Dual, standard configuration	A-VBSO-DE-33-FC2	Flangeable	084433XYZ	18308-04	157
Dual, relief compensated	A-VBSO-DE-CC-30	G 3/8, G 1/2	084404XYZ	18307-67	159
Dual, relief compensated	VBSO-DE-CC	G 1/2, G 3/4	054205XYZ	18307-68	161
Dual, relief compensated	A-VBSO-DE-CC	G 3/4	084205XYZ	18307-69	163
Dual counterbalance, vented	A-VBSO-DE-CCAP-78-FC2	Flangeable	084431XYZ	18308-64	165
Dual counterbalance, vented	A-VBSO-DE-CCAP-33	G 3/4	084494XYZ	18307-70	167
Dual counterbalance, vented	VBSO-DE-CCAP-33-FC2	Flangeable	054431XYZ	18307-71	169

Single counterbalance

A-VBSO-SE-78

08.35.20 - X - Y - Z

Technical data

Max. operating pressure	350 bar (5000 psi)
Max. flow	40 l/min. (11 gpm)
Weight	0.76 kg (1.68 lbs)
Manifold material	Zinc plated steel
Fluid	Mineral oil (HL, HLP) according DIN 51524
Fluid temperature range	-30 °C to 100 (-22 to 212 °F)
Viscosity range	5 to 800 mm^2/s (cSt)
Recommended degree of fluid contamination	Class 19/17/14 according to ISO 4406
Other technical data	see data sheet 18350-50
Relief setting: at least 1.3 times the load induced pressure.	

Note: for applications outside these parameters, please consult us.

Description

When pressure at V2 rises above the spring bias pressure, the check seat is pushed away from the piston and flow is allowed from V2 to C2. When load pressure at C2 rises above the pressure setting, the direct operated, differential area, relief function is activated and flow is relieved from C2 to V2. With pilot pressure at Pil, the pressure setting is reduced in proportion to the stated ratio of the valve, until opening and allowing flow from C2 to V2. The spring chamber is drained to V2, and any back-pressure at V2 is additive to the pressure setting in all functions.

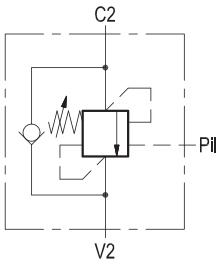

Characteristic curve

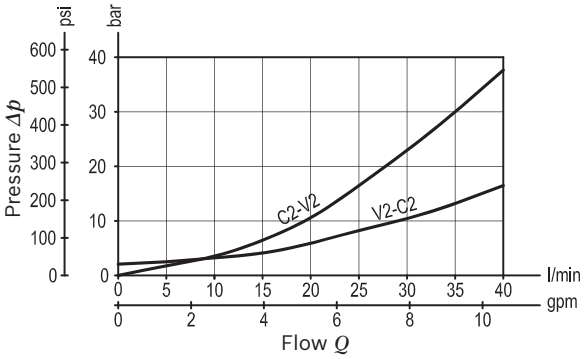

Dimensions [mm (inches)]

Ordering code

08.35.20	X	Y	Z

Single counterbalance

Pilot ratio

03	4.1 : 1

Port sizes	V2 - C2	Pil	
09	G 1/4	G 1/4	

	SPRINGS		
	Adj. pressure range bar (psi)	Pres. increase bar/turn (psi/turn)	Std. setting Q=5 (l/min) bar (psi)
35	200-350 (2900-5000)	175 (2538)	350 (5000)

Tamper resistant cap code
ordering code 11.04.23.002
Mat. no. R930000752

Preferred types

Type	Material number
083520030935000	R930003051

Type	Material number

Dimensions

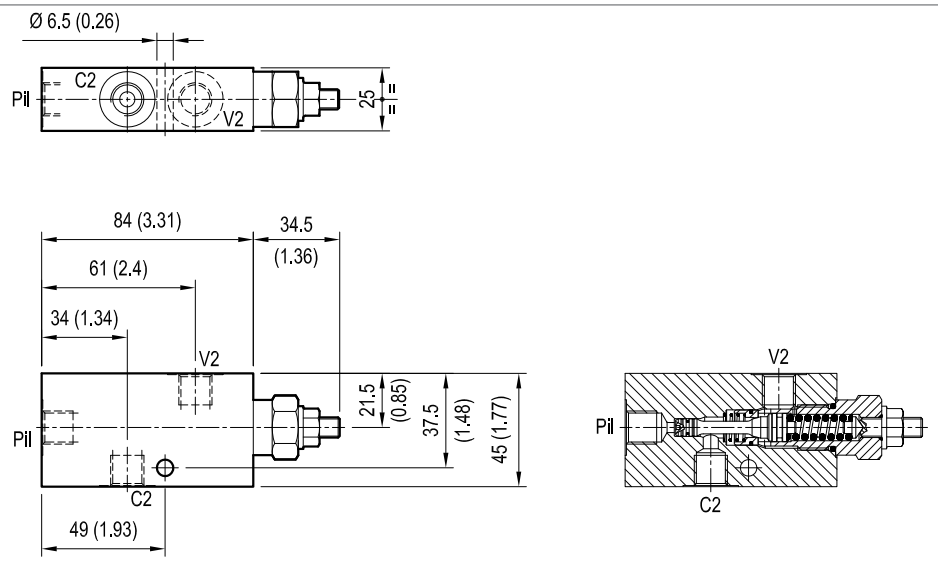

Single counterbalance

A-VBSO-SE-78-PL

08.49.85 - X - Y - Z

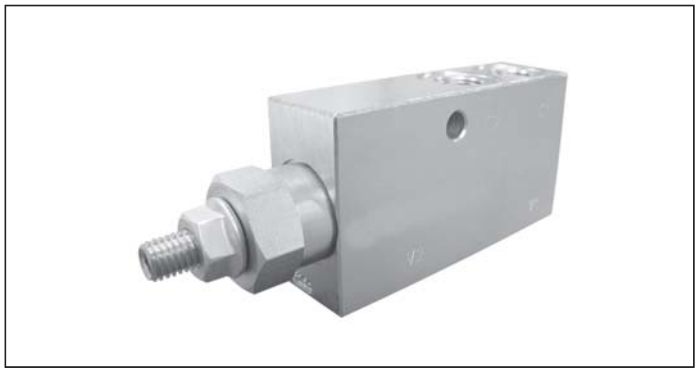

Technical data

Max. operating pressure	350 bar (5000 psi)
Max. flow	40 l/min. (11 gpm)
Weight	0.76 kg (1.68 lbs)
Manifold material	Zinc plated steel
Fluid	Mineral oil (HL, HLP) according DIN 51524
Fluid temperature range	-30 °C to 100 (-22 to 212 °F)
Viscosity range	5 to 800 mm^2/s (cSt)
Recommended degree of fluid contamination	Class 19/17/14 according to ISO 4406
Other technical data	see data sheet 18350-50
Relief setting: at least 1.3 times the load induced pressure.	

Note: for applications outside these parameters, please consult us.

Description

When pressure at V2 rises above the spring bias pressure, the check seat is pushed away from the piston and flow is allowed from V2 to C2. When load pressure at C2 rises above the pressure setting, the direct operated relief function is activated and flow is relieved from C2 to V2. With pilot pressure at V1-C1, the pressure setting is reduced in proportion to the stated ratio of the valve, until opening and allowing flow from C2 to V2. The spring chamber is drained to V2, and back-pressure at V2 is additive to the pressure setting in all functions.

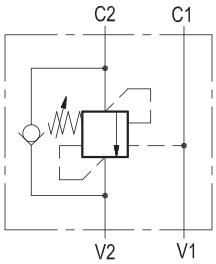

Characteristic curve

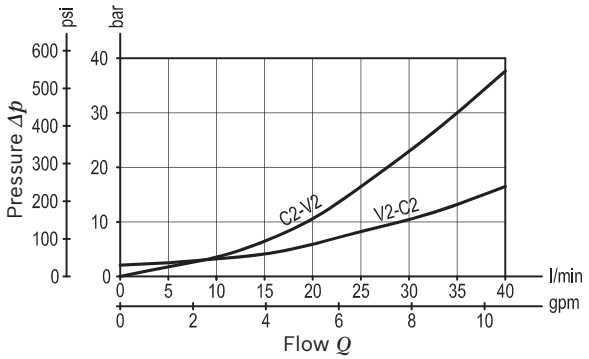

Ordering code

08.49.85	X	Y	Z

Single counterbalance

Pilot ratio

03	4.1 : 1

Port sizes	V2 - C2	C1 - C2	
09	G 1/4	G 1/4	

	SPRINGS		
	Adj. pressure range bar (psi)	Pres. increase bar/turn (psi/turn)	Std. setting Q=5 (l/min) bar (psi)
35	200-350 (2900-5000)	175 (2538)	350 (5000)

Tamper resistant cap code
ordering code 11.04.23.002
Mat. no. R930000752

Preferred types

Type	Material number
08498503093500A	R930004003

Type	Material number

Dimensions

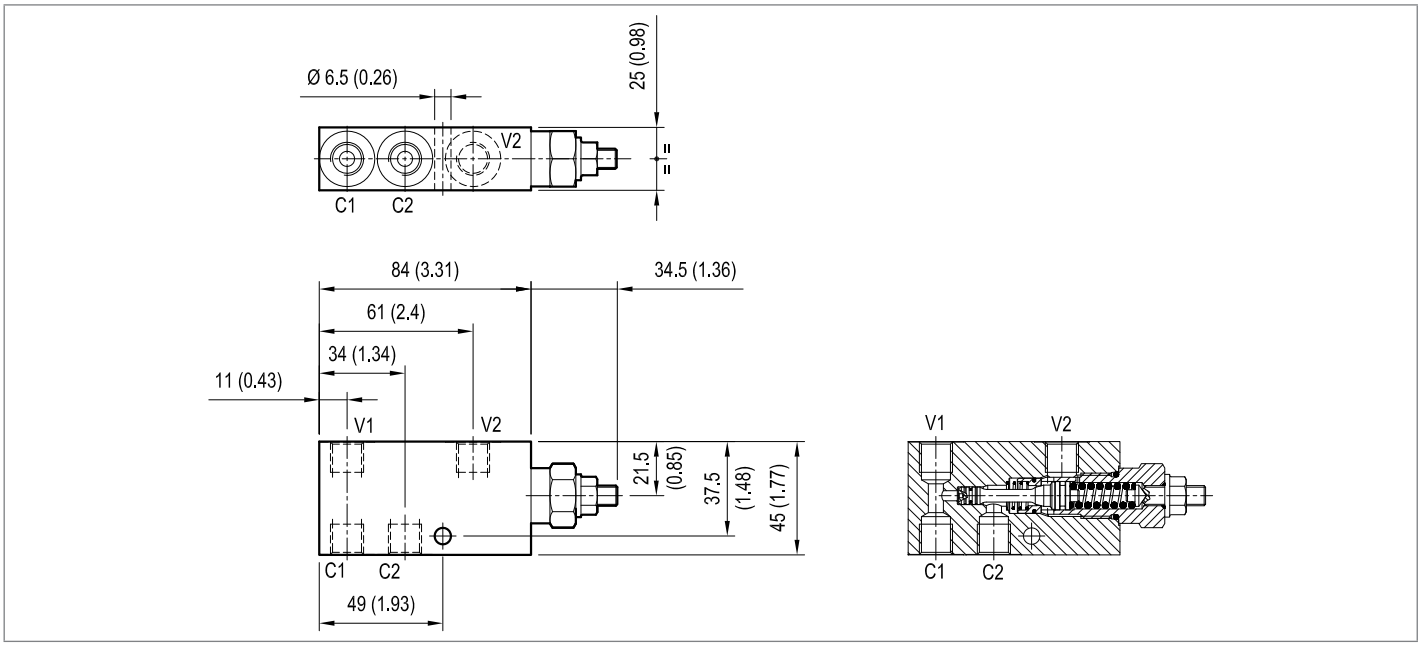

Single counterbalance

A-VBSO-SE-78-PL-FC2

08.49.68 - X - Y - Z

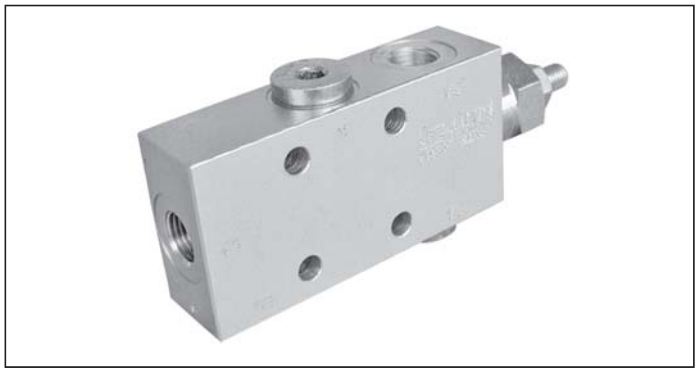

Technical data

Max. operating pressure	350 bar (5000 psi)
Max. flow	40 l/min. (11 gpm)
Weight	0.8 kg (1.76 lbs)
Manifold material	Zinc plated steel
Flange seal kit [1)]	E00000000000031 (R930005645)
Fluid	Mineral oil (HL, HLP) according DIN 51524
Fluid temperature range	-30 °C to 100 (-22 to 212 °F)
Viscosity range	5 to 800 mm^2/s (cSt)
Recommended degree of fluid contamination	Class 19/17/14 according to ISO 4406
Other technical data	see data sheet 18350-50
Relief setting: at least 1.3 times the load induced pressure.	

Note: for applications outside these parameters, please consult us.

[1)] Seals for 5 valves.

Description

When pressure at V2 rises above the spring bias pressure, the check seat is pushed away from the piston and flow is allowed from V2 to C2. When load pressure at C2 rises above the pressure setting, the direct operated relief function is activated and flow is relieved from C2 to V2. With pilot pressure at V1-C1, the pressure setting is reduced in proportion to the stated ratio of the valve, until opening and allowing flow from C2 to V2. The spring chamber is drained to V2, and back-pressure at V2 is additive to the pressure setting in all functions. For better safety and compact assembly, the C1 and C2 ports are gasket mounted directly on the actuator.

Note: port identified with M are not protected with calibrated orifice but in direct connection with pressure channels.

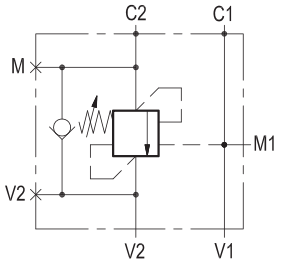

Characteristic curve

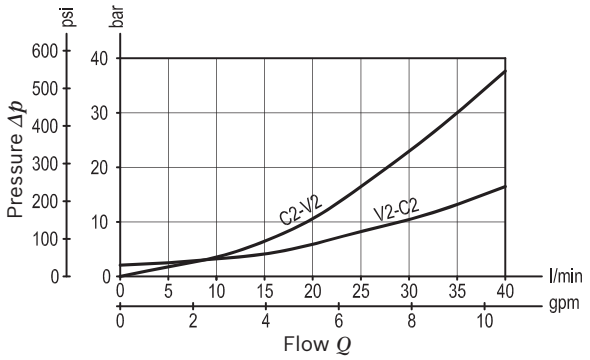

Dimensions [mm (inches)]

Ordering code

08.49.68	X	Y	Z

Single counterbalance

Pilot ratio

03	4.1 : 1

Port sizes	V2 - C2	C1 - C2	M - M1
09	G 1/4	Ø 6 (0.24)	G 1/4

	SPRINGS		
	Adj. pressure range bar (psi)	Pres. increase bar/turn (psi/turn)	Std. setting Q=5 (l/min) bar (psi)
35	200-350 (2900-5000)	175 (2538)	350 (5000)

Tamper resistant cap code
ordering code 11.04.23.002
Mat. no. R930000752

Preferred types

Type	Material number
084968030935000	R930003978

Type	Material number

Dimensions

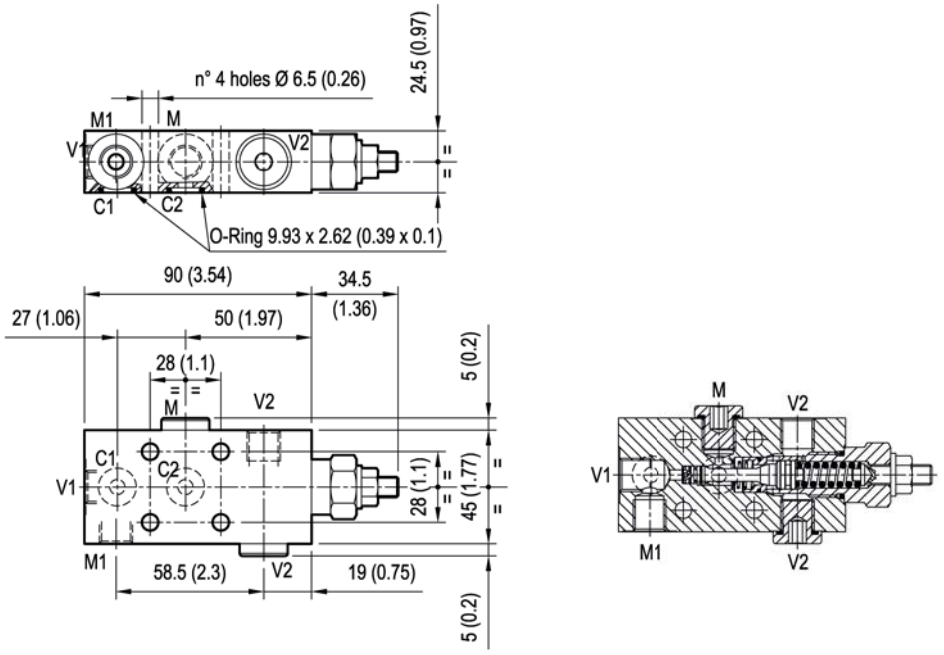

Single counterbalance

A-VBSO-SE-30

08.41.01 - X - Y - Z

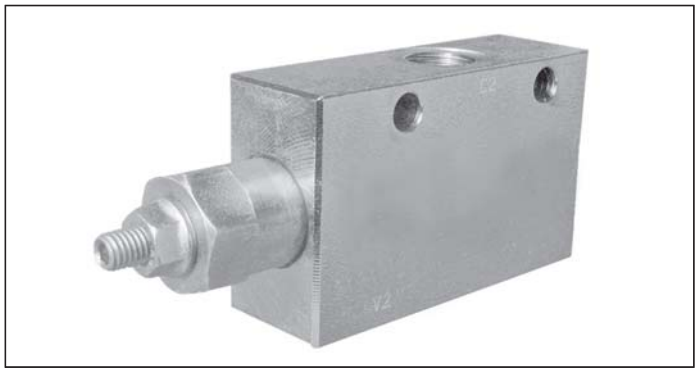

Technical data

Max. operating pressure	410 bar (5945 psi)
Max. flow	60 l/min. (16 gpm)
Weight	see “Dimensions”
Manifold material	Zinc plated steel
Fluid	Mineral oil (HL, HLP) according DIN 51524
Fluid temperature range	-30 °C to 100 (-22 to 212 °F)
Viscosity range	5 to 800 mm^2/s (cSt)
Recommended degree of fluid contamination	Class 19/17/14 according to ISO 4406
MTTFd	150 years see data sheet 18350-51
Other technical data	see data sheet 18350-50
Relief setting: at least 1.3 times the load induced pressure.	

Note: for applications outside these parameters, please consult us.

Description

When pressure at V2 rises above the spring bias pressure, the check seat is pushed away from the piston and flow is allowed from V2 to C2. When load pressure at C2 rises above the pressure setting, the direct operated, differential area, relief function is activated and flow is relieved from C2 to V2. With pilot pressure at Pil, the pressure setting is reduced in proportion to the stated ratio of the valve, until opening and allowing flow from C2 to V2. The spring chamber is drained to V2, and any back-pressure at V2 is additive to the pressure setting in all functions.

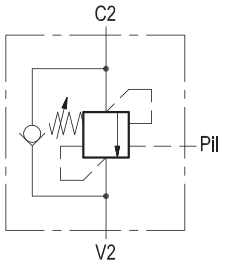

Characteristic curve

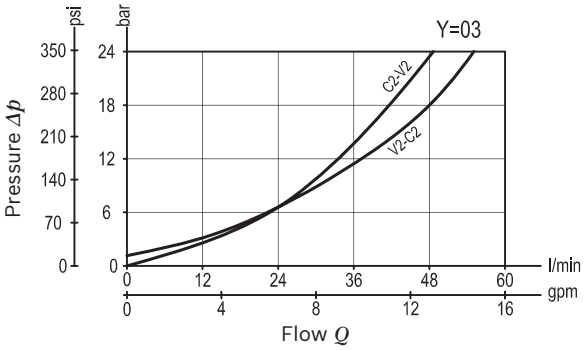

Dimensions [mm (inches)]

Ordering code

08.41.01	X	Y	Z

Single counterbalance

Pilot ratio

03 4.2 : 1

Port sizes	V2	C2	Pil
09	G 1/4	G 1/4	G 1/4
02	G 3/8	G 3/8	G 3/8
03	G 1/2	G 1/2	G 1/4

	SPRINGS		
	Adj. pressure range bar (psi)	Pres. increase bar/turn (psi/turn)	Std. setting Q=5 (l/min) bar (psi)
20	60-210 (870-3000)	63 (914)	200 (2900)
35	180-350 (2610-5000)	138 (2001)	350 (5000)

Pressure setting up to 410 bar: code on request.

Tamper resistant cap code
ordering code 11.04.23.002
Mat. no. R930000752

Preferred types

Type	Material number
08410103022000B	R930003264
08410103023500B	R987234306
08410103032000A	R930003270

Type	Material number
08410103033500B	R930003271
084101030920000	R930003272
08410103093500B	R930003273

Dimensions

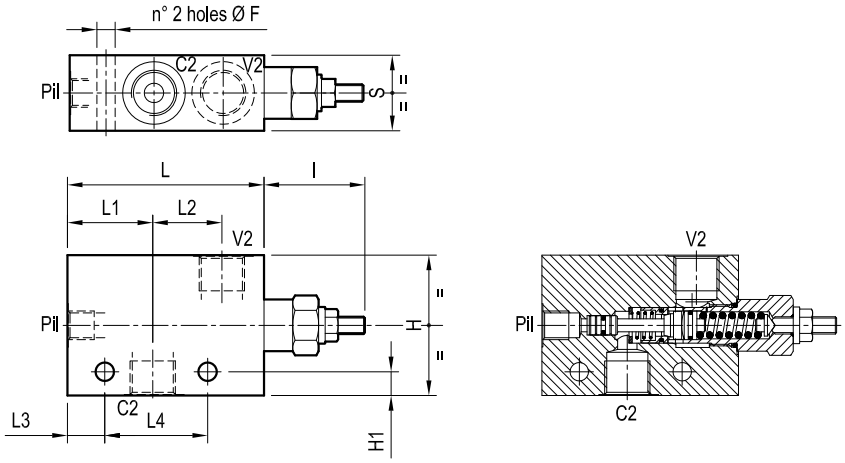

35 (1.38)	47.6 (1.87)	17.8 (0.7)	31 (1.22)	39.3 (1.55)	91 (3.58)	47 (1.85)	11 (0.43)	65 (2.56)	8.5 (0.34)						G 1/2	1.5 (3.29)
30 (1.18)	47.6 (1.87)	17.8 (0.7)	31 (1.22)	39.3 (1.55)	91 (3.58)	47 (1.85)	7 (0.28)	55 (2.17)	8.5 (0.34)						G 3/8	1.1 (2.38)
30 (1.18)	47.6 (1.87)	17.8 (0.7)	31 (1.22)	39.3 (1.55)	91 (3.58)	47 (1.85)	7 (0.28)	55 (2.17)	8.5 (0.34)						G 1/4	1.1 (2.38)
S	L4	L3	L2	L1	L	l	H1	H	F						Y	Weight kg (lbs)

Single counterbalance

A-VBSO-SE-30-FC1

08.41.02 - X - Y - Z

Description

When pressure at V2 rises above the spring bias pressure, the check seat is pushed away from the piston and flow is allowed from V2 to C2. When load pressure at C2 rises above the pressure setting, the direct operated relief function is activated and flow is relieved from C2 to V2. With pilot pressure at Pil, the pressure setting is reduced in proportion to the stated ratio of the valve, until opening and allowing flow from C2 to V2. The spring chamber is drained to V2, and back-pressure at V2 is additive to the pressure setting in all functions. For safety and compactness, the C2 port is gasket mounted the actuator.

Technical data

Max. operating pressure	410 bar (5945 psi)
Max. flow	60 l/min. (16 gpm)
Weight	1.05 kg (2.3 lbs)
Manifold material	Zinc plated steel
Flange seal kit [1)]	E00000000000056 (R930060579)
Fluid	Mineral oil (HL, HLP) according DIN 51524
Fluid temperature range	-30 °C to 100 (-22 to 212 °F)
Viscosity range	5 to 800 mm^2/s (cSt)
Recommended degree of fluid contamination	Class 19/17/14 according to ISO 4406
MTTFd	150 years see data sheet 18350-51
Other technical data	see data sheet 18350-50
Relief setting: at least 1.3 times the load induced pressure.	

Note: for applications outside these parameters, please consult us.

[1)] Seals for 10 valves.

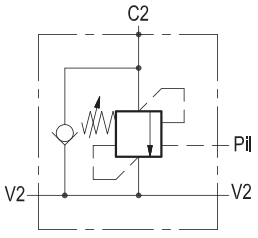

Characteristic curve

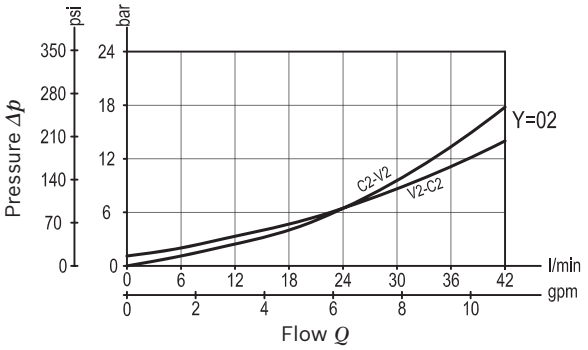

Dimensions [mm (inches)]

Ordering code

08.41.02	X	Y	Z

Single counterbalance

Pilot ratio

03 4.2 : 1

Port sizes	V2	C2	Pil
09	G 1/4	Ø 9 (0.35)	G 1/4
02	G 3/8	Ø 9 (0.35)	G 3/8

	SPRINGS		
	Adj. pressure range bar (psi)	Pres. increase bar/turn (psi/turn)	Std. setting Q=5 (l/min) bar (psi)
20	60-210 (870-3000)	63 (914)	200 (2900)
35	180-350 (2610-5000)	138 (2001)	350 (5000)

Pressure setting up to 410 bar: code on request.

Tamper resistant cap code
ordering code 11.04.23.002
Mat. no. R930000752

Preferred types

Type	Material number
08410203022000B	R930003285
08410203023500B	R930003286
08410203092000A	R930003287

Type	Material number
08410203093500B	R930003288

Dimensions

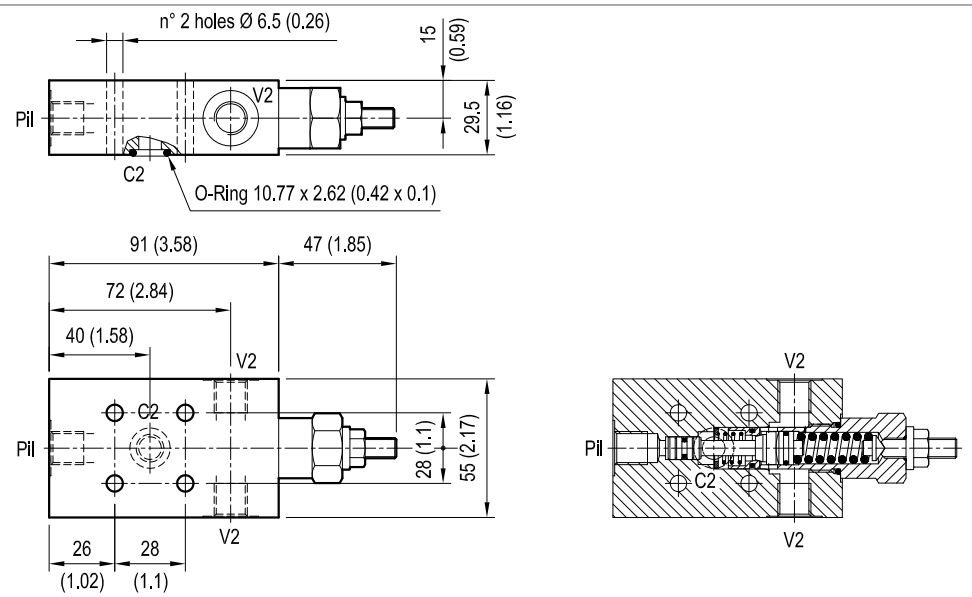

Single counterbalance

A-VBSO-SE-30-PI-PL

08.39.59 - X - Y - Z

Technical data

Max. operating pressure	410 bar (5945 psi)
Max. flow	60 l/min. (16 gpm)
Weight	see “Dimensions”
Manifold material	Zinc plated steel
Fluid	Mineral oil (HL, HLP) according DIN 51524
Fluid temperature range	-30 °C to 100 (-22 to 212 °F)
Viscosity range	5 to 800 mm^2/s (cSt)
Recommended degree of fluid contamination	Class 19/17/14 according to ISO 4406
MTTFd	150 years see data sheet 18350-51
Other technical data	see data sheet 18350-50
Relief setting: at least 1.3 times the load induced pressure.	
For higher stability at all flows and pressures, the pilot line includes hydraulic damping.	

Note: for applications outside these parameters, please consult us.

Description

When pressure at V2 rises above the spring bias pressure, the check seat is pushed away from the piston and flow is allowed from V2 to C2. When load pressure at C2 rises above the pressure setting, the direct operated, differential area, relief function is activated and flow is relieved from C2 to V2. With pilot pressure at V1-C1, the pressure setting is reduced in proportion to the stated ratio of the valve, until opening and allowing flow from C2 to V2. The spring chamber is drained to V2, and any back-pressure at V2 is additive to the pressure setting in all functions.

Note: port identified with M are not protected with calibrated orifice but in direct connection with pressure channels.

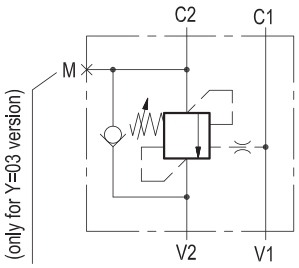

Characteristic curve

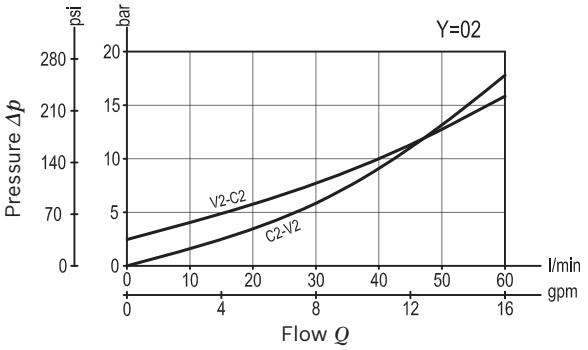

Ordering code

08.39.59	X	Y	Z

Single counterbalance

Pilot ratio

03 4.2 : 1

Port sizes	V1 - V2	C1 - C2	M
02	G 3/8	G 3/8	/
03	G 1/2	G 1/2	G 1/4

	SPRINGS		
	Adj. pressure range bar (psi)	Pres. increase bar/turn (psi/turn)	Std. setting Q=5 (l/min) bar (psi)
20	60-210 (870-3000)	63 (914)	200 (2900)
35	180-350 (2610-5000)	138 (2001)	350 (5000)

Pressure setting up to 410 bar: code on request.

Tamper resistant cap code
ordering code 11.04.23.002
Mat. no. R930000752

Preferred types

Type	Material number
083959030220000	R930006757
083959030235000	R930006443
083959030320000	R930006758

Type	Material number
083959030335000	R930006759

Dimensions

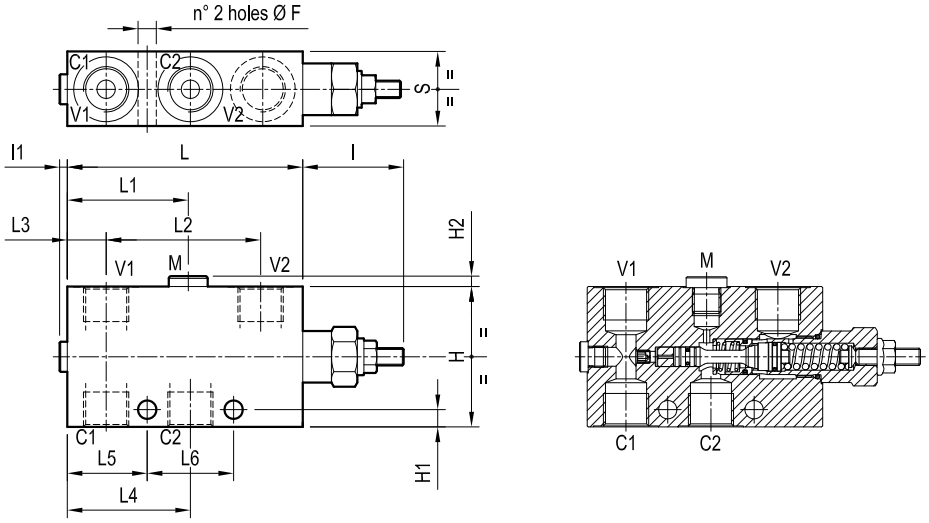

35 (1.38)	40 (1.58)	37.3 (1.47)	57.3 (2.26)	18 (0.71)	71 (2.8)	55.3 (2.18)	109 (4.29)	3.5 (0.14)	47 (1.85)	5 (0.2)	8 (0.32)	65 (2.56)	8.5 (0.34)		G 1/2	1.81 (3.99)
30 (1.18)	40 (1.58)	37.3 (1.47)	57.3 (2.26)	18 (0.71)	71 (2.8)	- -	109 (4.29)	3.5 (0.14)	47 (1.85)	- -	8 (0.32)	55 (2.17)	8.5 (0.34)		G 3/8	1.3 (2.87)
S	L6	L5	L4	L3	L2	L1	L	l1	l	H2	H1	H	F		Y	Weight kg (lbs)

Single counterbalance

A-VBSO-SE30-FC1

08.39.62 - X - Y - Z

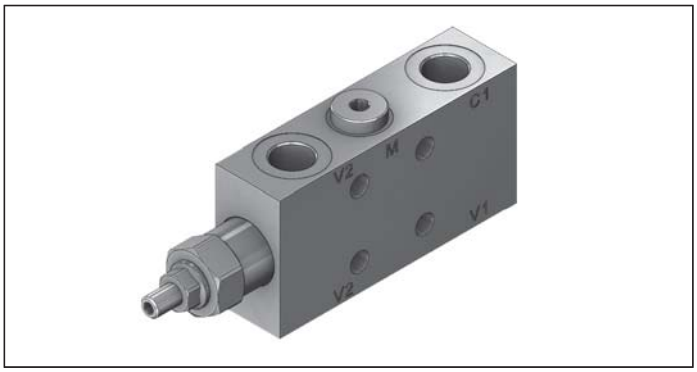

Technical data

Max. operating pressure	410 bar (5945 psi)
Max. flow	see performance graph
Weight	see “Dimensions”
Manifold material	Zinc plated steel
Flange seal kit [1)]	E000000000000.. (R93000....)
Fluid	Mineral oil (HL, HLP) according DIN 51524
Fluid temperature range	-30 °C to 100 (-22 to 212 °F)
Viscosity range	5 to 800 mm^2/s (cSt)
Recommended degree of fluid contamination	Class 19/17/14 according to ISO 4406
Other technical data	see data sheet 18350-50
Relief setting: at least 1.3 times the load induced pressure.	

Note: for applications outside these parameters, please consult us.

[1)] Seals for .. valves.

Description

When pressure at V2 rises above the spring bias pressure, the check seat is pushed away from the piston and flow is allowed from V2 to C2. When load pressure at C2 rises above the pressure setting, the direct operated relief function is activated and flow is relieved from C2 to V2. With pilot pressure at V1-C1, the pressure setting is reduced in proportion to the stated ratio of the valve, until opening and allowing flow from C2 to V2. The spring chamber is drained to V2, and any back-pressure at V2 is additive to the pressure setting in all functions. For safety and compactness, the C2 port is gasket mounted the actuator.

Note: port identified with M are not protected with calibrated orifice but in direct connection with pressure channels.

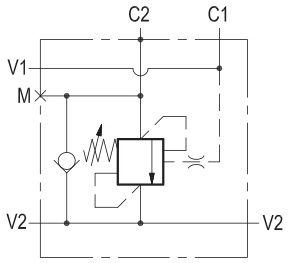

Characteristic curve

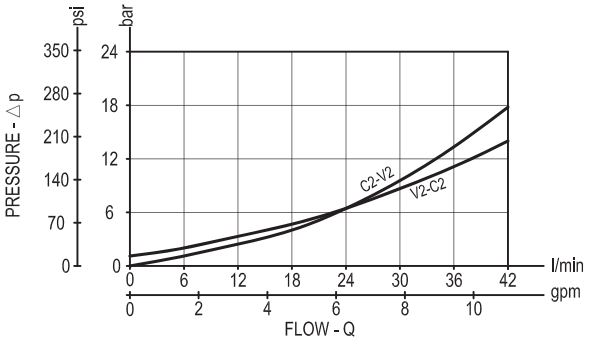

Ordering code

08.39.62	X	Y	Z

Single counterbalance, vented

Pilot ratio

= 03 4.2:1

	SPRINGS		
	Adj. pressure range bar (psi)	Pres. increase bar/turn (psi/turn)	Std. setting Q=5 (l/min) bar (psi)
= 35	180-350 (2610-5000)	138 (2042)	350 (5000)

Pressure setting up to 410 bar: code on request.

Tamper resistant cap code
ordeting code 11.04.23.002
Mat. no. R930000752

Port sizes	V1-V2-C1	C2	M
= 02	G 3/8	Ø 9	G 1/4
= 03	G 1/2	Ø 9	G 1/4

Preferred types

Type	Material number
083962030235000	R930007078
083962030335000	R930007081

Type	Material number

Dimensions

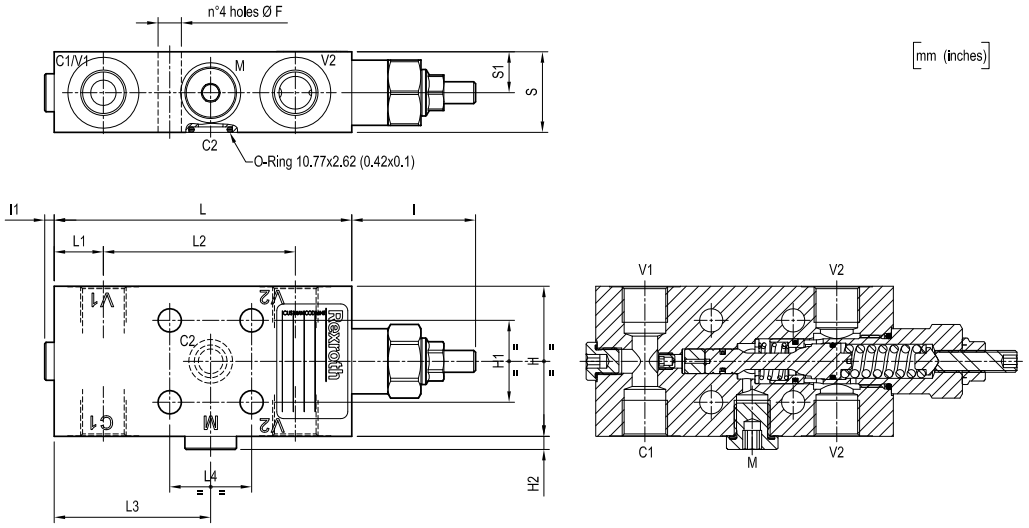

17.5 (0.69)	34.5 (1.36)	30 (1.18)	57 (2.24)	71.8 (2.83)	18 (0.71)	109 (4.29)	3.5 (0.14)	47 (1.85)	4.8 (0.19)	30 (1.18)	65 (2.56)	8.5 (0.34)		G 1/2	1.68 (3.7)
15 (0.59)	29.5 (1.16)	30 (1.18)	57.3 (2.25)	70.3 (2.77)	18 (0.71)	109 (4.29)	3.5 (0.14)	45.5 (1.79)	4.8 (0.19)	30 (1.18)	55 (2.17)	8.5 (0.34)		G 3/8	1.26 (2.78)
S1	S	L4	L3	L2	L1	L	l1	l	H2	H1	H	F		Y	Weight kg (lbs)

Single counterbalance

A-VBSO-SE-30-FC2-PI-PL

08.39.60 - X - Y - Z

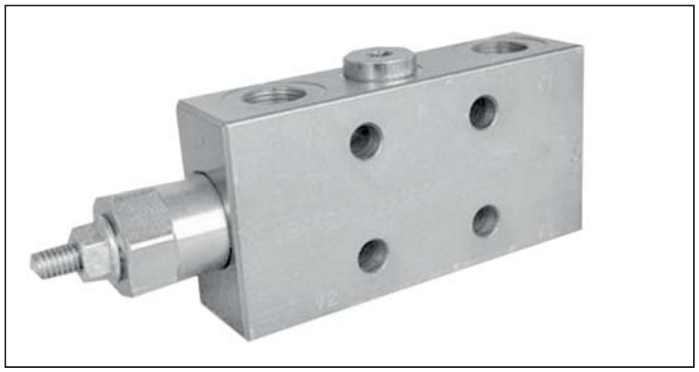

Technical data

Max. operating pressure	410 bar (5945 psi)
Max. flow	60 l/min. (16 gpm)
Weight	see “Dimensions”
Manifold material	Zinc plated steel
Flange seal kit [1)]	E00000000000014 (R930005947)
Fluid	Mineral oil (HL, HLP) according DIN 51524
Fluid temperature range	-30 °C to 100 (-22 to 212 °F)
Viscosity range	5 to 800 mm^2/s (cSt)
Recommended degree of fluid contamination	Class 19/17/14 according to ISO 4406
MTTFd	150 years see data sheet 18350-51
Other technical data	see data sheet 18350-50
Relief setting: at least 1.3 times the load induced pressure.	
For higher stability at all flows and pressures, the pilot line includes hydraulic damping.	

Note: for applications outside these parameters, please consult us.

[1)] Seals for 10 valves.

Description

When pressure at V2 rises above the spring bias pressure, the check seat is pushed away from the piston and flow is allowed from V2 to C2. When load pressure at C2 rises above the pressure setting, the direct operated relief function is activated and flow is relieved from C2 to V2. With pilot pressure at V1-C1, the pressure setting is reduced in proportion to the stated ratio of the valve, until opening and allowing flow from C2 to V2. The spring chamber is drained to V2, and back-pressure at V2 is additive to the pressure setting in all functions. For better safety and compact assembly, the C1 and C2 ports are gasket mounted directly on the actuator.

Note: port identified with M are not protected with calibrated orifice but in direct connection with pressure channels.

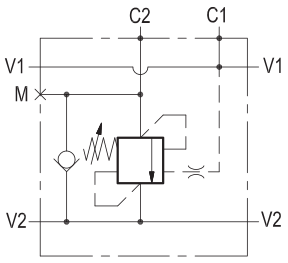

Characteristic curve

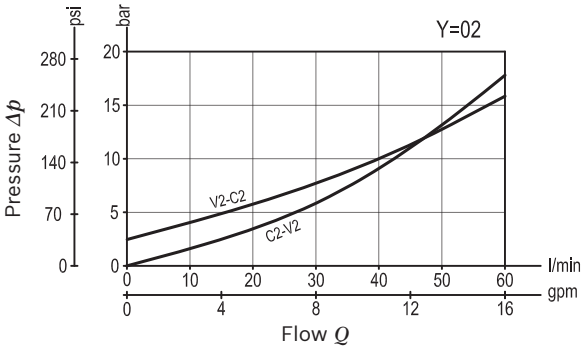

Ordering code

08.39.60	X	Y	Z

Single counterbalance

Pilot ratio

03 4.2 : 1

Port sizes	V1 - V2	C1 - C2	M
02	G 3/8	Ø 9 (0.35)	G 1/4
03	G 1/2	Ø 9 (0.35)	G 1/4

	SPRINGS		
	Adj. pressure range bar (psi)	Pres. increase bar/turn (psi/turn)	Std. setting Q=5 (l/min) bar (psi)
20	60-210 (870-3000)	63 (914)	200 (2900)
35	180-350 (2610-5000)	138 (2001)	350 (5000)

Pressure setting up to 410 bar: code on request.

Tamper resistant cap code
ordering code 11.04.23.002
Mat. no. R930000752

Preferred types

Type	Material number
083960030220000	R930006768
083960030235000	R930006444
083960030320000	R930006772

Type	Material number
083960030335000	R930006773

Dimensions

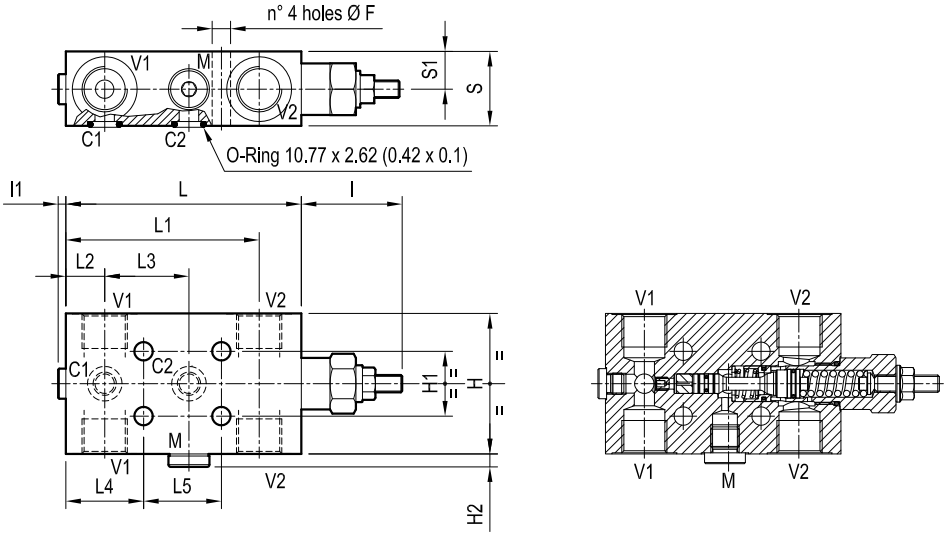

17.5 (0.69)	34.5 (1.36)	36 (1.42)	36 (1.42)	39 (1.54)	18 (0.71)	89.5 (3.52)	109 (4.29)	3.5 (0.14)	47 (1.85)	6 (0.24)	30 (1.18)	65 (2.56)	8.5 (0.34)		G 1/2	1.75 (3.86)
15 (0.59)	29.5 (1.16)	36 (1.42)	36 (1.42)	39.3 (1.55)	18 (0.71)	88.3 (3.48)	109 (4.29)	3.5 (0.14)	47 (1.85)	6 (0.24)	30 (1.18)	55 (2.17)	8.5 (0.34)		G 3/8	1.24 (2.73)
S1	S	L5	L4	L3	L2	L1	L	I1	I	H2	H1	H	F		Y	Weight kg (lbs)

Single counterbalance

A-VBSO-SE-30-SAF

08.47.72 - X - Y - Z

Technical data

Max. operating pressure	410 bar (5945 psi)
Max. flow	80 l/min. (21 gpm)
Weight	1.2 kg (2.7 lbs)
Manifold material	Zinc plated steel
Fluid	Mineral oil (HL, HLP) according DIN 51524
Fluid temperature range	-30 °C to 100 (-22 to 212 °F)
Viscosity range	5 to 800 mm^2/s (cSt)
Recommended degree of fluid contamination	Class 19/17/14 according to ISO 4406
Other technical data	see data sheet 18350-50
Relief setting: at least 1.3 times the load induced pressure.	
The pilot line includes adjustable hydraulic damping, for fine tuning of stability and response.	

Note: for applications outside these parameters, please consult us.

Description

When pressure at V2 rises above the spring bias pressure, the check seat is pushed away from the piston and flow is allowed from V2 to C2. When load pressure at C2 rises above the pressure setting, the direct operated, differential area, relief function is activated and flow is relieved from C2 to V2. With pilot pressure at Pil, the pressure setting is reduced in proportion to the stated ratio of the valve, until opening and allowing flow from C2 to V2. The spring chamber is drained to V2, and any back-pressure at V2 is additive to the pressure setting in all functions.

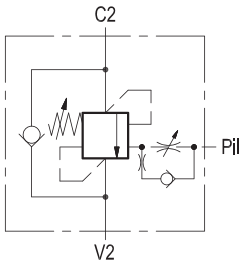

Characteristic curve

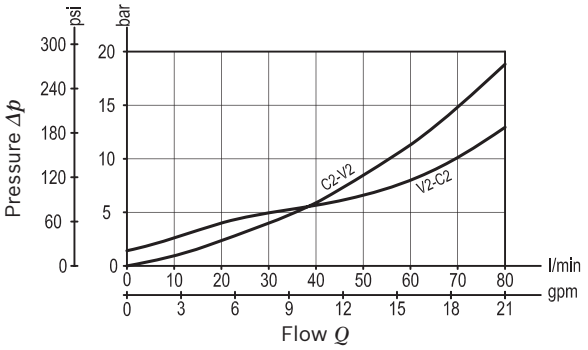

Ordering code

08.47.72	X	Y	Z

Single counterbalance

Pilot ratio

03	4.2 : 1

Port sizes	V1	V2	Pil
03	G 1/2	G 1/2	G 1/4

	SPRINGS		
	Adj. pressure range bar (psi)	Pres. increase bar/turn (psi/turn)	Std. setting Q=5 (l/min) bar (psi)
20	130-320 (1900-4650)	94 (1363)	280 (4000)

Pressure setting up to 410 bar: code on request.

Preferred types

Type	Material number
084772030320000	R930003728

Type	Material number

Dimensions

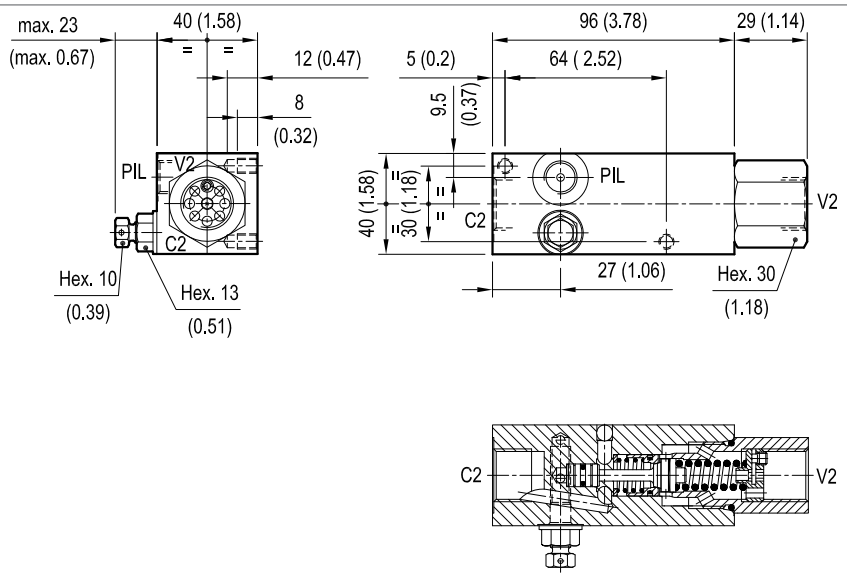

The adjusting screw can be completely unscrewed. Do not exceed the indicated protrusion range of the adjusted screw.

Single counterbalance

A-VBSO-SE-90-PL

08.39.28 - X - Y - Z

Technical data

Max. operating pressure	410 bar (5945 psi)
Max. flow	90 l/min. (24 gpm)
Weight	2.2 kg (4.8 lbs)
Manifold material	Zinc plated steel
Fluid	Mineral oil (HL, HLP) according DIN 51524
Fluid temperature range	-30 °C to 100 (-22 to 212 °F)
Viscosity range	5 to 800 mm^2/s (cSt)
Recommended degree of fluid contamination	Class 19/17/14 according to ISO 4406
Other technical data	see data sheet 18350-50
Relief setting: at least 1.3 times the load induced pressure.	
The pilot line includes adjustable hydraulic damping, for fine tuning of stability and response.	

Note: for applications outside these parameters, please consult us.

Description

When pressure at V2 rises above the spring bias pressure, the check seat is pushed away from the piston and flow is allowed from V2 to C2. When load pressure at C2 rises above the pressure setting, the direct operated, differential area, relief function is activated and flow is relieved from C2 to V2. With pilot pressure at V1-C1, the pressure setting is reduced in proportion to the stated ratio of the valve, until opening and allowing flow from C2 to V2. The spring chamber is drained to V2, and any back-pressure at V2 is additive to the pressure setting in all functions.

Note: port identified with M are not protected with calibrated orifice but in direct connection with pressure channels.

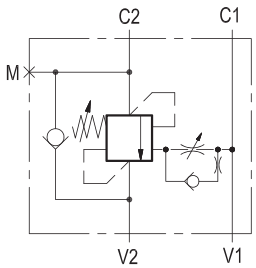

Characteristic curve

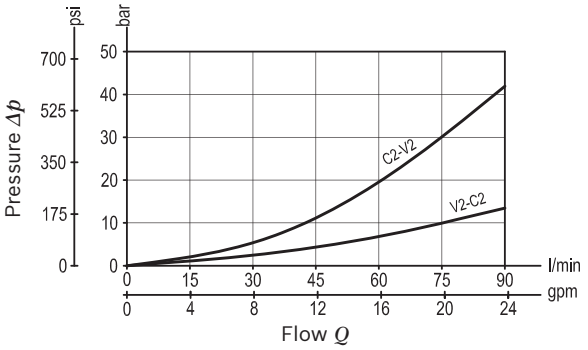

Dimensions [mm (inches)]

Ordering code

08.39.28	X	Y	Z

Single counterbalance

Pilot ratio

13	4.2 : 1

Port sizes	V1 - V2	C1 - C2	M
03	G 1/2	G 1/2	G 1/4

	SPRINGS		
	Adj. pressure range bar (psi)	Pres. increase bar/turn (psi/turn)	Std. setting Q=5 (l/min) bar (psi)
35	180-350 (2610-5000)	138 (2001)	350 (5000)

Pressure setting up to 410 bar: code on request.

Tamper resistant cap code
ordering code 11.04.23.002
Mat. no. R930000752

Preferred types

Type	Material number
083928130335000	R930003871

Type	Material number

Dimensions

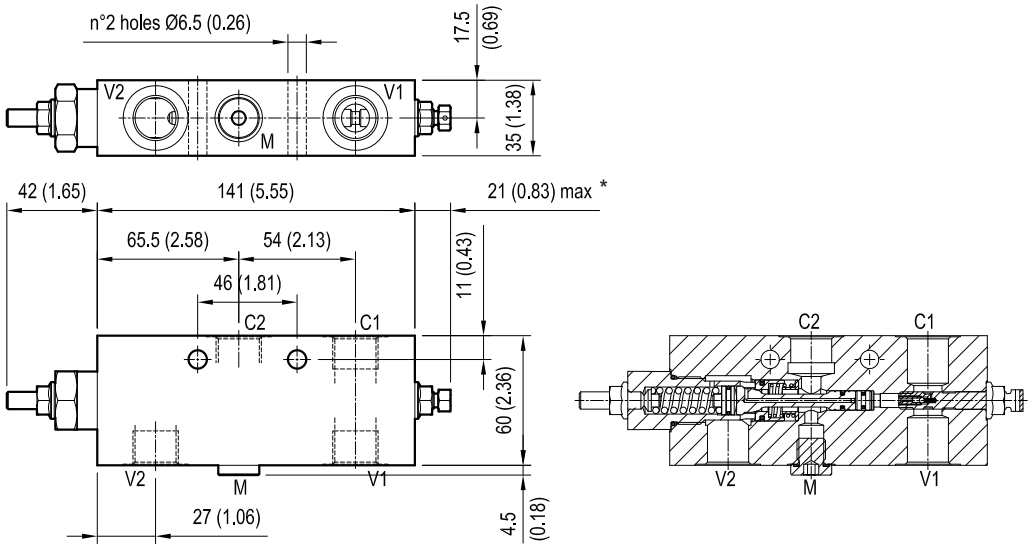

* The adjusting screw can be completely unscrewed. Do not exceed the indicated protrusion range of the adjusted screw.

Single counterbalance

VBSO-SE

05.41.01 - X - Y - Z

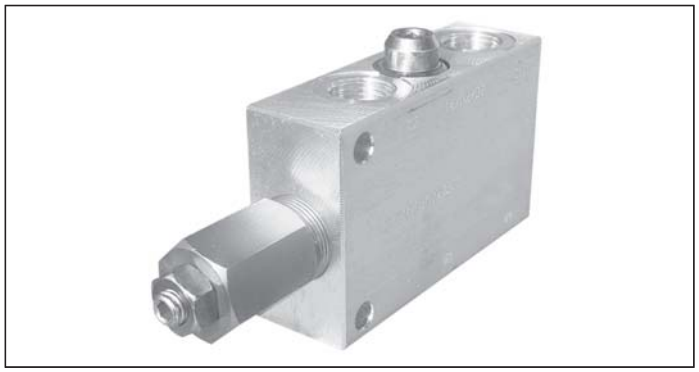

Description

When pressure at V2 rises above the spring bias pressure, the check valve poppet is pushed away from the seat and flow is allowed from V2 to C2. When load pressure at C2 rises above the pressure setting, the direct operated, differential area, relief function is activated and flow is relieved from C2 to V2. With pilot pressure at V1-C1, the pressure setting is reduced in proportion to the stated ratio of the valve, until opening and allowing flow from C2 to V2. The spring chamber is drained to V2, and any back-pressure at V2 is additive to the pressure setting in all functions.

Technical data

Operating pressure	up to 210 bar (3000 psi)
Max. flow	see performance graph
Weight	see “Dimensions”
Manifold material	Aluminium
Note: aluminium bodies are often strong enough for operating pressures exceeding 210 bar (3000 psi), depending from the fatigue life expected in the specific application. If in doubt, consult our Service Network.	
Fluid	Mineral oil (HL, HLP) according DIN 51524
Fluid temperature range	-30 °C to 100 (-22 to 212 °F)
Viscosity range	5 to 800 mm^2/s (cSt)
Recommended degree of fluid contamination	Class 19/17/14 according to ISO 4406
Other technical data	see data sheet 18350-50
Relief setting: at least 1.3 times the highest expected load.	

Note: for applications outside these parameters, please consult us.

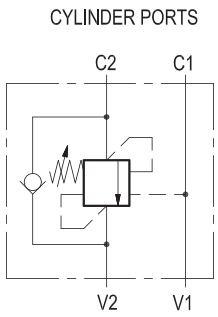

Characteristic curve

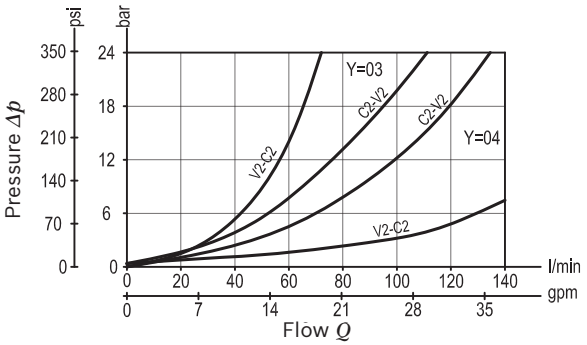

Dimensions [mm (inches)]

Ordering code

05.41.01	X	Y	Z

Single counterbalance

Pilot ratio	
03	8.2 : 1
10	3.2 : 1

Port sizes	V1-V2	C1-C2	
03	G 1/2	G 1/2	
04	G 3/4	G 3/4	

	SPRINGS		
	Adj. pressure range bar (psi)	Pres. increase bar/turn (psi/turn)	Std. setting Q=5 (l/min) bar (psi)
20	60-210 (870-3000)	64 (928)	200 (2900)
35	100-350 (1450-5000)	106 (1537)	350 (5000)

Preferred types

Type	Material number
054101030320000	R930001654
05410103033500A	R930001655
054101100320000	R930000088
05410110033500A	R930001662
054101030420000	R930001658

Type	Material number
05410103043500A	R930001659
054101100420000	R930001663
05410110043500A	R930001664

Dimensions

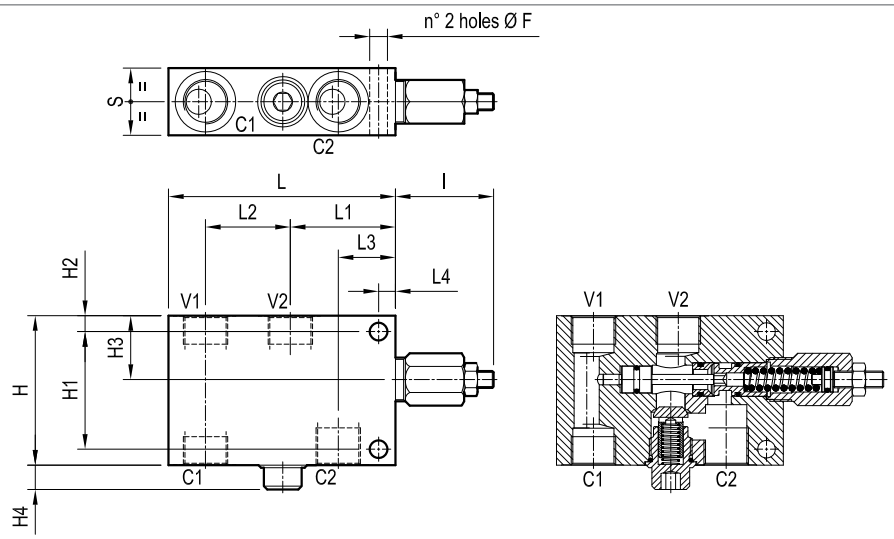

40 (1.58)	10 (0.39)	34 (1.34)	54.5 (2.15)	62.5 (2.46)	135 (5.32)	58.5 (2.3)	14.5 (0.57)	38 (1.5)	9.5 (0.37)	70 (2.76)	89 (3.5)		10.5 (0.41)		G 3/4	1.42 (3.13)
35 (1.38)	10 (0.39)	32.5 (1.28)	40.5 (1.6)	54.5 (2.15)	113 (4.55)	58.5 (2.3)	14.5 (0.57)	33.5 (1.32)	7.5 (0.3)	54 (2.13)	70 (2.76)		8.5 (0.34)		G 1/2	0.9 (1.98)
S	L4	L3	L2	L1	L	l	H4	H3	H2	H1	H		F		Y	Weight kg (lbs)

Single counterbalance

A-VBSO-SE-33-PL

08.45.85 - X - Y - Z

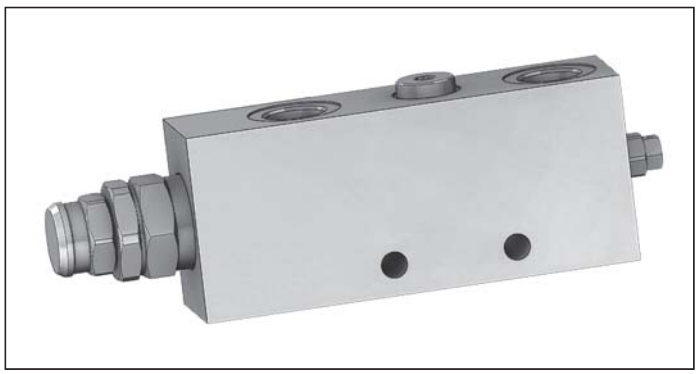

Technical data

Max. operating pressure	410 bar (5945 psi)
Max. flow	150 l/min. (40 gpm)
Weight	see “Dimensions”
Manifold material	Zinc plated steel
Fluid	Mineral oil (HL, HLP) according DIN 51524
Fluid temperature range	-30 °C to 100 (-22 to 212 °F)
Viscosity range	5 to 800 mm^2/s (cSt)
Recommended degree of fluid contamination	Class 19/17/14 according to ISO 4406
MTTFd	150 years see data sheet 18350-51
Other technical data	see data sheet 18350-50
Relief setting: at least 1.3 times the load induced pressure.	
The pilot line includes adjustable hydraulic damping, for fine tuning of stability and response.	

Note: for applications outside these parameters, please consult us.

Description

When pressure at V2 rises above the spring bias pressure, the check seat is pushed away from the piston and flow is allowed from V2 to C2. When load pressure at C2 rises above the pressure setting, the direct operated, differential area, relief function is activated and flow is relieved from C2 to V2. With pilot pressure at V1-C1, the pressure setting is reduced in proportion to the stated ratio of the valve, until opening and allowing flow from C2 to V2. The spring chamber is drained to V2, and any back-pressure at V2 is additive to the pressure setting in all functions.

Note: port identified with M are not protected with calibrated orifice but in direct connection with pressure channels.

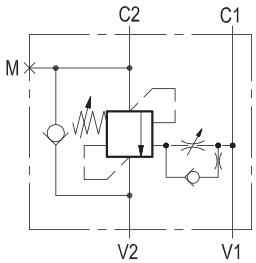

Characteristic curve

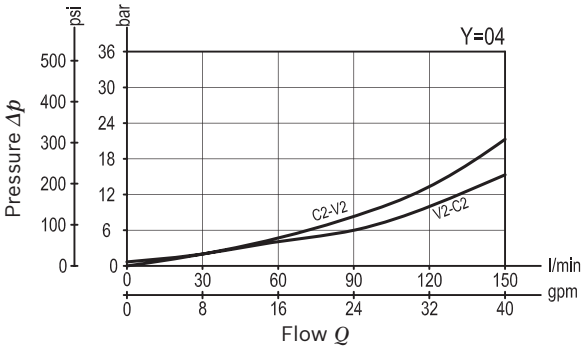

Ordering code

08.45.85	X	Y	Z

Single counterbalance

Pilot ratio

13 4 : 1

Port sizes	V1 - V2	C1 - C2	M
03	G 1/2	G 1/2	G 1/4
04	G 3/4	G 3/4	G 1/4

	SPRINGS		
	Adj. pressure range bar (psi)	Pres. increase bar/turn (psi/turn)	Std. setting Q=5 (l/min) bar (psi)
35	150-350 (2175-5000)	110 (1595)	350 (5000)

Pressure setting up to 410 bar: code on request.

Tamper resistant cap code
ordering code 11.04.30.001
Mat. no. R930005194

Preferred types

Type	Material number
08458513033500D	R930007102
08458513043500D	R930007142

Type	Material number

Dimensions

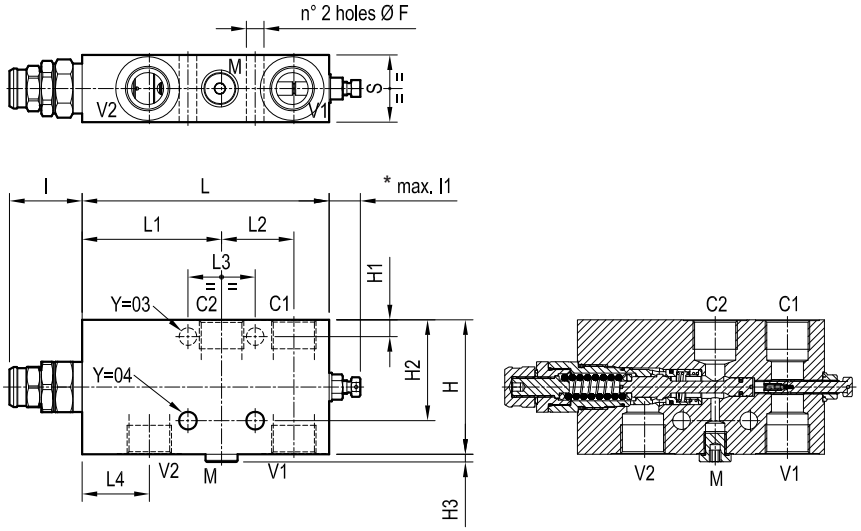

40 (1.58)	39 (1.54)	40 (1.58)	43 (1.69)	82 (3.23)	147 (5.79)	16 (0.63)	43 (1.69)	4.5 (0.18)	60 (2.36)	- -	80 (3.15)		10.5 (0.41)		G 3/4	3.1 (6.83)
40 (1.58)	39 (1.54)	40 (1.58)	40 (1.58)	82 (3.23)	141 (5.55)	16.5 (0.65)	43 (1.69)	4.5 (0.18)	- -	10 (0.39)	60 (2.36)		8.5 (0.34)		G 1/2	2.4 (5.29)
S	L4	L3	L2	L1	L	I1	I	H3	H2	H1	H		F		Y	Weight kg (lbs)

* The adjusting screw can be completely unscrewed. Do not exceed the indicated protrusion range of the adjusted screw.

Single counterbalance

A-VBSO-SE-33-PL-FC1 08.45.87 - X - Y - Z

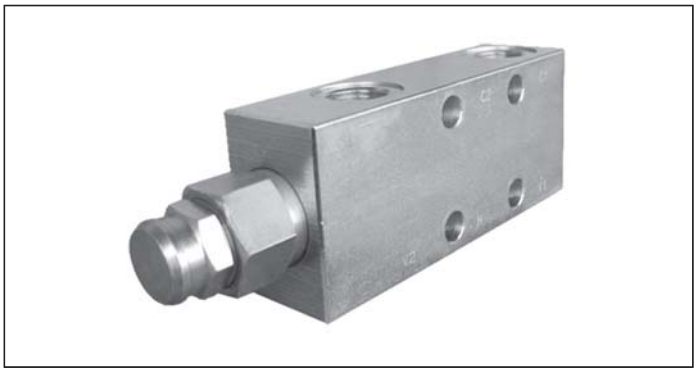

Description

When pressure at V2 rises above the spring bias pressure, the check seat is pushed away from the piston and flow is allowed from V2 to C2. When load pressure at C2 rises above the pressure setting, the direct operated relief function is activated and flow is relieved from C2 to V2. With pilot pressure at V1-C1, the pressure setting is reduced in proportion to the stated ratio of the valve, until opening and allowing flow from C2 to V2. The spring chamber is drained to V2, and any back-pressure at V2 is additive to the pressure setting in all functions. For safety and compactness, the C2 port is gasket mounted the actuator.

Note: port identified with M are not protected with calibrated orifice but in direct connection with pressure channels.

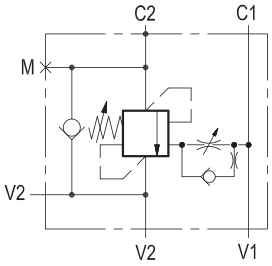

Technical data

Max. operating pressure	410 bar (5945 psi)
Max. flow	150 l/min. (40 gpm)
Weight	see “Dimensions”
Manifold material	Zinc plated steel
Flange seal kit [1)]	E00000000000057 (R930060587)
Fluid	Mineral oil (HL, HLP) according DIN 51524
Fluid temperature range	-30 °C to 100 (-22 to 212 °F)
Viscosity range	5 to 800 mm^2/s (cSt)
Recommended degree of fluid contamination	Class 19/17/14 according to ISO 4406
MTTFd	150 years see data sheet 18350-51
Other technical data	see data sheet 18350-50
Relief setting: at least 1.3 times the load induced pressure.	
The pilot line includes adjustable hydraulic damping, for fine tuning of stability and response.	

Note: for applications outside these parameters, please consult us.

[1)] Seals for 10 valves.

Characteristic curve

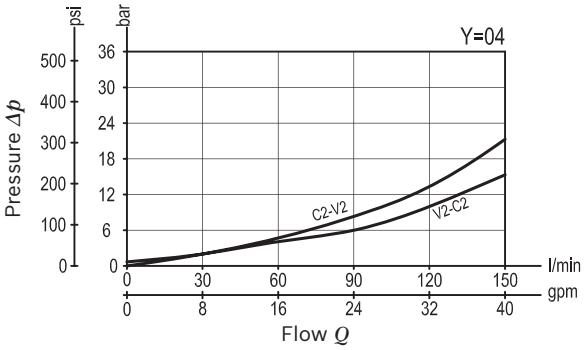

Ordering code

08.45.87	X	Y	Z

Single counterbalance

Pilot ratio

13 4 : 1

Port sizes	V1 - V2 - C1	C2	M
03	G 1/2	Ø 12 (0.47)	G 1/4
04	G 3/4	Ø 12 (0.47)	G 1/4

	SPRINGS		
	Adj. pressure range bar (psi)	Pres. increase bar/turn (psi/turn)	Std. setting Q=5 (l/min) bar (psi)
35	150-350 (2175-5000)	110 (1595)	350 (5000)

Pressure setting up to 410 bar: code on request.

Tamper resistant cap code
ordering code 11.04.30.001
Mat. no. R930005194

Preferred types

Type	Material number
08458713033500D	R930007234
08458713043500D	R930007153

Type	Material number

Dimensions

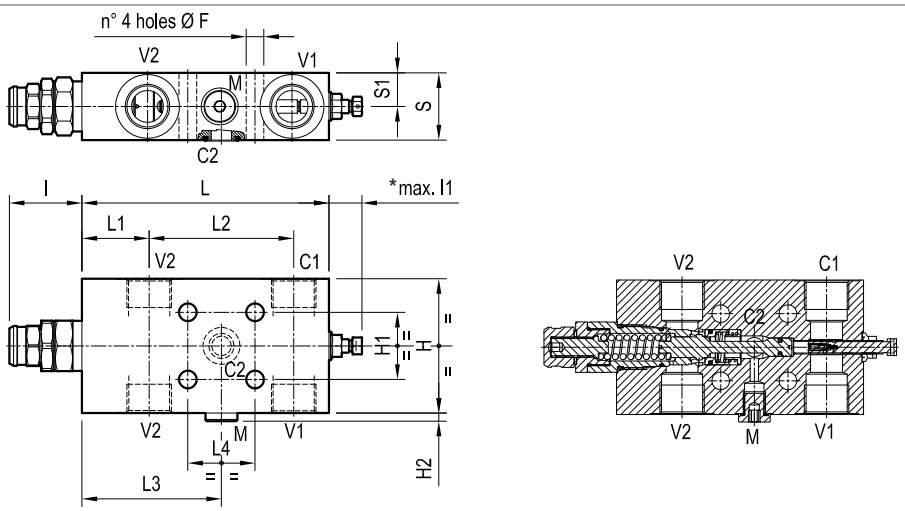

20 (0.79)	39.5 (1.56)	40 (1.58)	82 (3.23)	86 (3.39)	39 (1.54)	147 (5.79)	16 (0.63)	43 (1.69)	5 (0.2)	40 (1.58)	80 (3.15)	10.5 (0.41)			G 3/4	3 (6.61)
20 (0.79)	39.5 (1.56)	40 (1.58)	82 (3.23)	83 (3.27)	39 (1.54)	141 (5.55)	15.5 (0.61)	43 (1.69)	5 (0.2)	40 (1.58)	60 (2.36)	10.5 (0.41)			G 1/2	2.3 (5.07)
S1	S	L4	L3	L2	L1	L	I1	I	H2	H1	H	F			Y	Weight kg (lbs)

* The adjusting screw can be completely unscrewed. Do not exceed the indicated protrusion range of the adjusted screw.

Single counterbalance

A-VBSO-SE-33-PL-FC2

08.45.94 - X - Y - Z

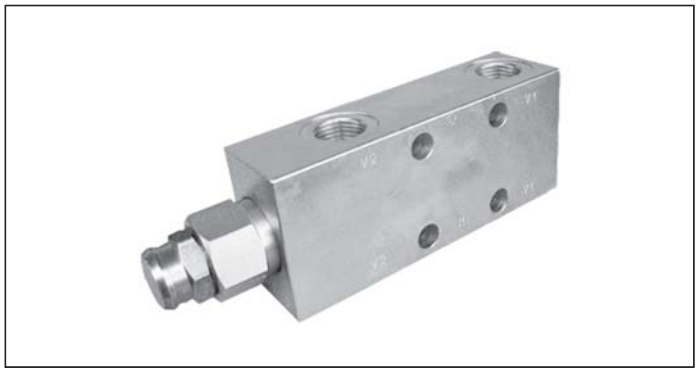

Description

When pressure at V2 rises above the spring bias pressure, the check seat is pushed away from the piston and flow is allowed from V2 to C2. When load pressure at C2 rises above the pressure setting, the direct operated relief function is activated and flow is relieved from C2 to V2. With pilot pressure at V1-C1, the pressure setting is reduced in proportion to the stated ratio of the valve, until opening and allowing flow from C2 to V2. The spring chamber is drained to V2, and any back-pressure at V2 is additive to the pressure setting in all functions. For safety and compactness, the C2 port is gasket mounted the actuator.

Note: port identified with M are not protected with calibrated orifice but in direct connection with pressure channels.

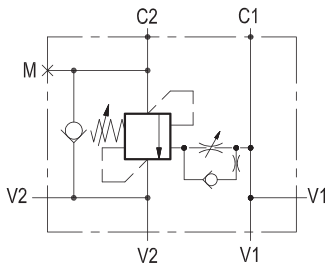

Technical data

Max. operating pressure	410 bar (5945 psi)
Max. flow	150 l/min. (40 gpm)
Weight	see “Dimensions”
Manifold material	Zinc plated steel
Flange seal kit [1)]	E00000000000057 (R930060587)
Fluid	Mineral oil (HL, HLP) according DIN 51524
Fluid temperature range	-30 °C to 100 (-22 to 212 °F)
Viscosity range	5 to 800 mm^2/s (cSt)
Recommended degree of fluid contamination	Class 19/17/14 according to ISO 4406
MTTFd	150 years see data sheet 18350-51
Other technical data	see data sheet 18350-50
Relief setting: at least 1.3 times the load induced pressure.	
The pilot line includes adjustable hydraulic damping, for fine tuning of stability and response.	

Note: for applications outside these parameters, please consult us.

[1)] Seals for 5 valves.

Characteristic curve

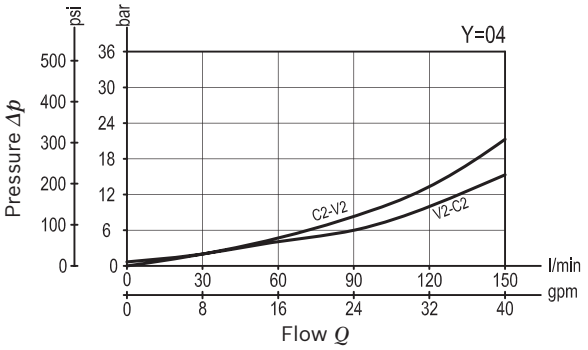

Ordering code

08.45.94	X	Y	Z

Single counterbalance

Pilot ratio

13 4 : 1

Port sizes	V1 - V2 - C1	C2	M
03	G 1/2	Ø 12 (0.47)	G 1/4
04	G 3/4	Ø 12 (0.47)	G 1/4

	SPRINGS		
	Adj. pressure range bar (psi)	Pres. increase bar/turn (psi/turn)	Std. setting Q=5 (l/min) bar (psi)
35	150-350 (2175-5000)	110 (1595)	350 (5000)

Pressure setting up to 410 bar: code on request.

Tamper resistant cap code
ordering code 11.04.30.001
Mat. no. R930005194

Preferred types

Type	Material number
08459413033500D	R930007165
08459413043500D	R930007466

Type	Material number

Dimensions

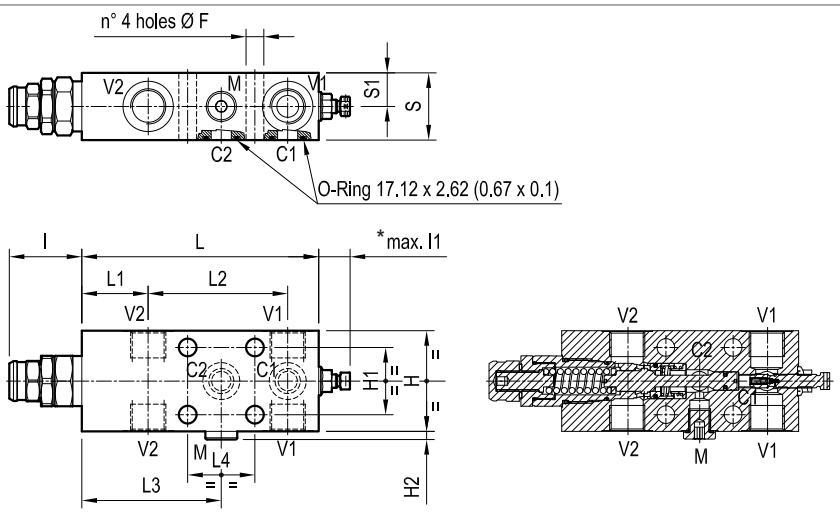

20 (0.79)	39.5 (1.56)	40 (1.58)	82 (3.23)	86 (3.39)	39 (1.54)	147 (5.79)	16 (0.63)	43 (1.69)	5 (0.2)	40 (1.58)	80 (3.15)	10.5 (0.41)			G 3/4	3 (6.61)
20 (0.79)	39.5 (1.56)	40 (1.58)	82 (3.23)	83 (3.27)	39 (1.54)	141 (5.55)	16.5 (0.65)	43 (1.69)	5 (0.2)	40 (1.58)	60 (2.36)	10.5 (0.41)			G 1/2	2.3 (5.07)
S1	S	L4	L3	L2	L1	L	I1	I	H2	H1	H	F			Y	Weight kg (lbs)

* The adjusting screw can be completely unscrewed. Do not exceed the indicated protrusion range of the adjusted screw.

Single counterbalance

A-VBSO-SE-42

08.39.30 - X - Y - Z

Technical data

Max. operating pressure	410 bar (5945 psi)
Max. flow	350 l/min. (92 gpm)
Weight	5.8 kg (12.8 lbs)
Manifold material	Zinc plated steel
Fluid	Mineral oil (HL, HLP) according DIN 51524
Fluid temperature range	-30 °C to 100 (-22 to 212 °F)
Viscosity range	5 to 800 mm^2/s (cSt)
Recommended degree of fluid contamination	Class 19/17/14 according to ISO 4406
Other technical data	see data sheet 18350-50
Relief setting: at least 1.3 times the load induced pressure.	
The pilot line includes adjustable hydraulic damping, for fine tuning of stability and response.	

Note: for applications outside these parameters, please consult us.

Description

When pressure at V2 rises above the spring bias pressure, the check seat is pushed away from the piston and flow is allowed from V2 to C2. When load pressure at C2 rises above the pressure setting, the direct operated, differential area, relief function is activated and flow is relieved from C2 to V2. With pilot pressure at Pil, the pressure setting is reduced in proportion to the stated ratio of the valve, until opening and allowing flow from C2 to V2. The spring chamber is drained to V2, and any back-pressure at V2 is additive to the pressure setting in all functions.

Note: port identified with M are not protected with calibrated orifice but in direct connection with pressure channels.

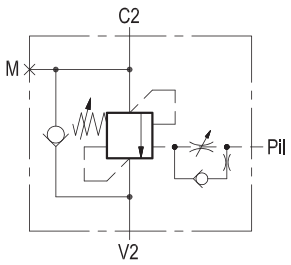

Characteristic curve

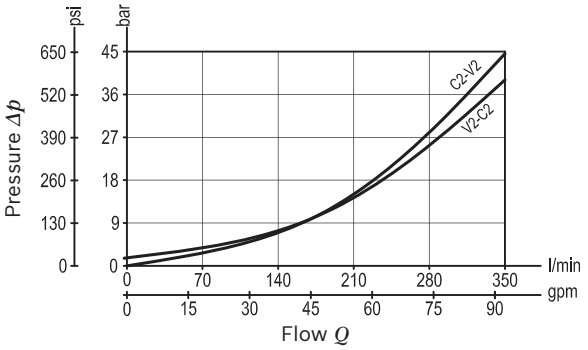

Dimensions [mm (inches)]

Ordering code

08.39.30	X	Y	Z

Single counterbalance

Pilot ratio

13	4 : 1

Port sizes	V2 - C2	Pil	M
05	G 1	G 1/4	G 1/4

	SPRINGS		
	Adj. pressure range bar (psi)	Pres. increase bar/turn (psi/turn)	Std. setting Q=5 (l/min) bar (psi)
35	120-350 (1740-5000)	73 (1059)	350 (5000)

Pressure setting up to 410 bar: code on request.

Tamper resistant cap code
ordering code 11.04.30.001
Mat. no. R930005194

Preferred types

Type	Material number
08393013053500B	R930051073

Type	Material number

Dimensions

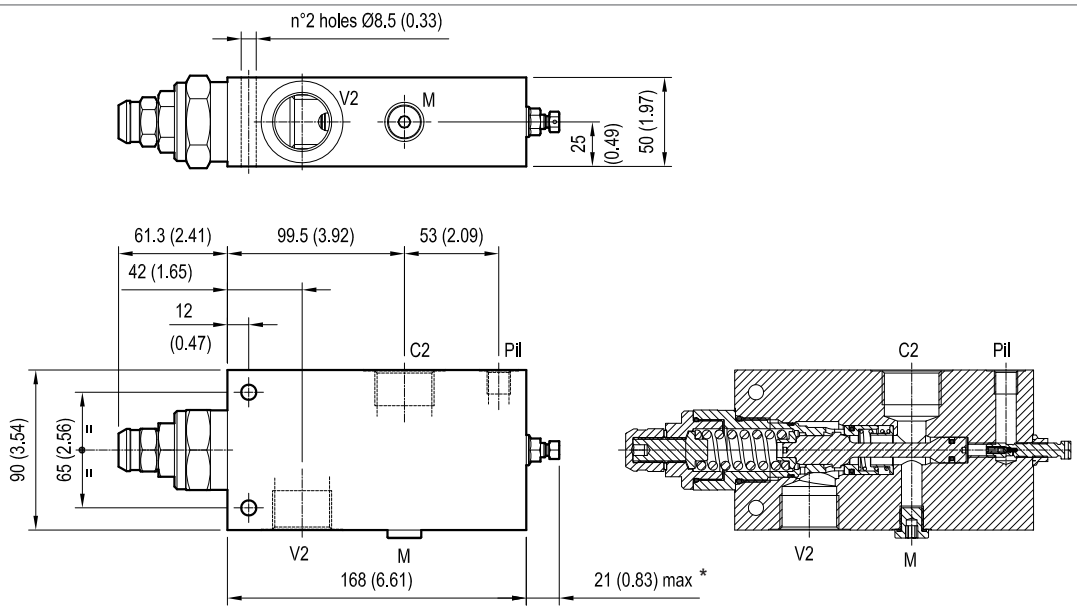

* The adjusting screw can be completely unscrewed. Do not exceed the indicated protrusion range of the adjusted screw.

Single counterbalance, relief compensated

A-VBSO-SE-CC-78

08.39.27 - X - Y - Z

Technical data

Max. operating pressure	350 bar (5000 psi)
Max. flow	40 l/min. (11 gpm)
Weight	0.91 kg (2 lbs)
Manifold material	Zinc plated steel
Fluid	Mineral oil (HL, HLP) according DIN 51524
Fluid temperature range	-30 °C to 100 (-22 to 212 °F)
Viscosity range	5 to 800 mm^2/s (cSt)
Recommended degree of fluid contamination	Class 19/17/14 according to ISO 4406
Other technical data	see data sheet 18350-50
Relief setting: at least 1.3 times the load induced pressure.	
The pilot line includes adjustable hydraulic damping, for fine tuning of stability and response.	

Note: for applications outside these parameters, please consult us.

Description

When pressure at V2 rises above the spring bias pressure, the check seat is pushed away from the piston and flow is allowed from V2 to C2. When pressure at C2 rises above the setting, flow is relieved from C2 to V2. With pilot pressure at V1–C1, the pressure setting is reduced in proportion to the stated ratio of the valve, until opening and allowing flow from C2 to V2. The spring chamber is drained to V2. The valve applies a balanced piston design allowing relief operation at the valve setting independent of back-pressure at V2. However, the piloted opening of the valve remains subject to additive pressure at port V2.

Note: port identified with M are not protected with calibrated orifice but in direct connection with pressure channels.

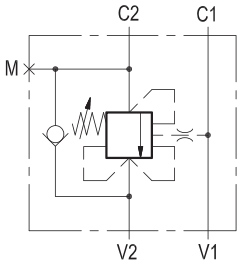

Characteristic curve

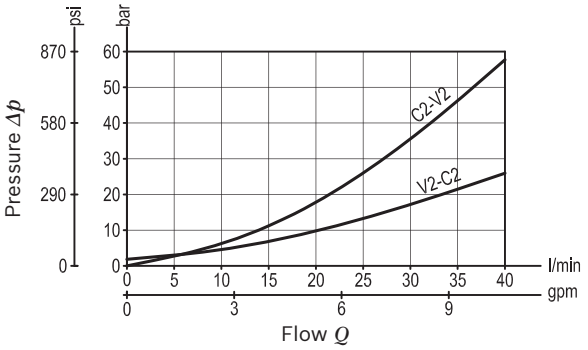

Dimensions [mm (inches)]

Ordering code

08.39.27	X	Y	Z

Single counterbalance, relief compensated

Pilot ratio

03	4.1 : 1

Port sizes	V1 - V2	C1 - C2	M
09	G 1/4	G 1/4	G 1/8

	SPRINGS		
	Adj. pressure range bar (psi)	Pres. increase bar/turn (psi/turn)	Std. setting Q=5 (l/min) bar (psi)
35	200-350 (2900-5000)	210 (3000)	350 (5000)

Preferred types

Type	Material number
083927030935000	R930001966

Type	Material number

Dimensions

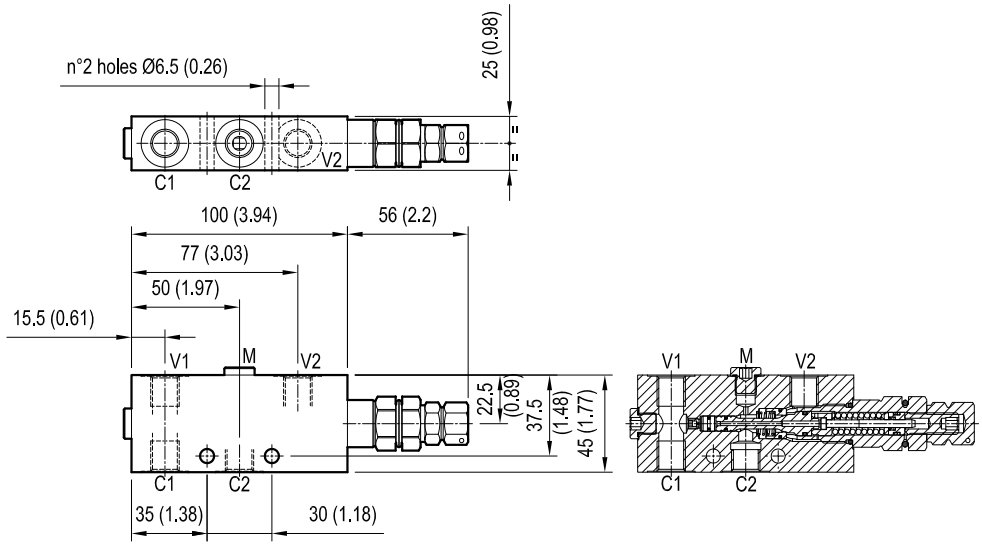

Single counterbalance, relief compensated

A-VBSO-SE-CC-30

08.43.96 - X - Y - Z

Description

When pressure at V2 rises above the spring bias pressure, the check seat is pushed away from the piston and flow is allowed from V2 to C2. When load pressure at C2 rises above the setting, the direct-acting relief function is activated and flow is relieved from C2 to V2. With pilot pressure at Pil, the pressure setting is reduced in proportion to the stated ratio, until opening and allowing flow from C2 to V2. The spring chamber is drained to V2. The valve applies a balanced piston allowing relief at the valve setting independent of back-pressure at V2. However, the piloted opening of the valve remains subject to additive pressure at port V2.

Technical data

Max. operating pressure	410 bar (5945 psi)
Max. flow	60 l/min. (16 gpm)
Weight	see “Dimensions”
Manifold material	Zinc plated steel
Fluid	Mineral oil (HL, HLP) according DIN 51524
Fluid temperature range	-30 °C to 100 (-22 to 212 °F)
Viscosity range	5 to 800 mm^2/s (cSt)
Recommended degree of fluid contamination	Class 19/17/14 according to ISO 4406
MTTFd	150 years see data sheet 18350-51
Other technical data	see data sheet 18350-50
Relief setting: at least 1.3 times the highest expected load.	

Note: for applications outside these parameters, please consult us.

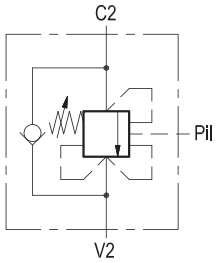

Characteristic curve

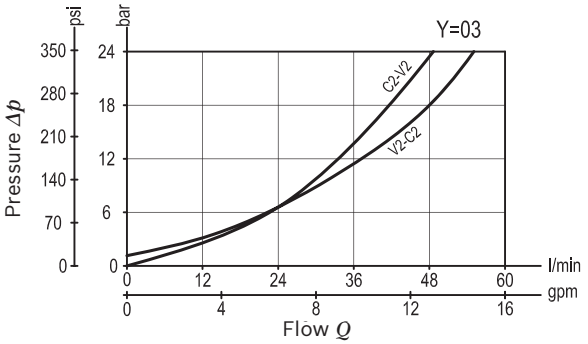

Dimensions [mm (inches)]

Ordering code

08.43.96	X	Y	Z

Single counterbalance, relief compensated

Pilot ratio

03	4.2 : 1

Port sizes	V2	C2	Pil
02	G 3/8	G 3/8	G 3/8
03	G 1/2	G 1/2	G 1/4

	SPRINGS		
	Adj. pressure range bar (psi)	Pres. increase bar/turn (psi/turn)	Std. setting Q=5 (l/min) bar (psi)
20	60-210 (870-3000)	75 (1088)	200 (2900)
35	100-350 (1450-5000)	165 (2393)	350 (5000)

Pressure setting up to 410 bar: code on request.

Tamper resistant cap code
ordering code 11.04.23.003
Mat. no. R930000754

Preferred types

Type	Material number
08439603022000A	R930007270
08439603023500A	R930007271
08439603032000A	R930007272
08439603033500A	R930007273

Type	Material number

Dimensions

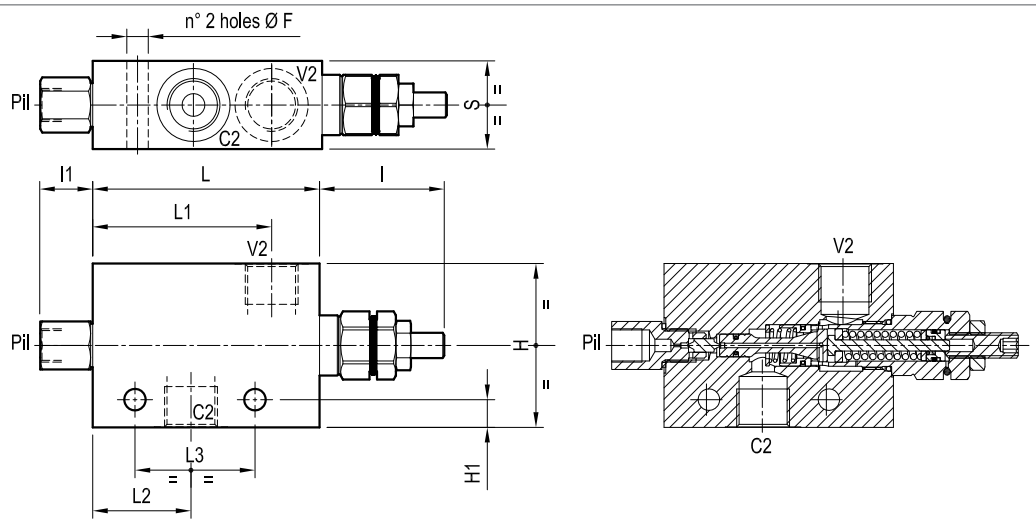

35 (1.38)	47.6 (1.87)	39.3 (1.55)	70.3 (2.77)	91 (3.58)	21 (0.83)	49.5 (1.95)	11 (0.43)	65 (2.56)			8.5 (0.34)				G 1/2	1.55 (3.42)
30 (1.18)	47.6 (1.87)	39.3 (1.55)	70.3 (2.77)	91 (3.58)	21 (0.83)	49.5 (1.95)	7 (0.28)	55 (2.17)			8.5 (0.34)				G 3/8	1.15 (2.54)
S	L3	L2	L1	L	l1	l	H1	H			F				Y	Weight kg (lbs)

Single counterbalance, relief compensated

A-VBSO-SE-CC-30-PL

08.45.17 - X - Y - Z

Description

When pressure at V2 rises above the spring bias pressure, the check seat is pushed away from the piston and flow is allowed from V2 to C2. When load pressure at C2 rises above the pressure setting flow is relieved from C2 to V2. With pilot pressure at V1–C1, the pressure setting is reduced in proportion to the stated ratio of the valve, until opening and allowing flow from C2 to V2. The spring chamber is drained to V2. The valve applies a balanced piston design allowing relief operation at the valve setting independent of back-pressure at V2. However, the piloted opening of the valve remains subject to additive pressure at port V2.

Note: port identified with M are not protected with calibrated orifice but in direct connection with pressure channels.

Technical data

Max. operating pressure	410 bar (5945 psi)
Max. flow	60 l/min. (16 gpm)
Weight	see “Dimensions”
Manifold material	Zinc plated steel
Fluid	Mineral oil (HL, HLP) according DIN 51524
Fluid temperature range	-30 °C to 100 (-22 to 212 °F)
Viscosity range	5 to 800 mm^2/s (cSt)
Recommended degree of fluid contamination	Class 19/17/14 according to ISO 4406
MMTFd	150 years see data sheet 18350-51
Other technical data	see data sheet 18350-50
Relief setting: at least 1.3 times the highest expected load.	

Note: for applications outside these parameters, please consult us.

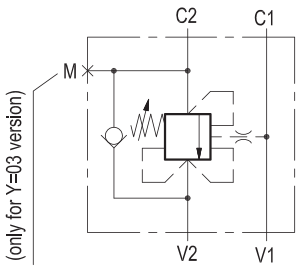

Characteristic curve

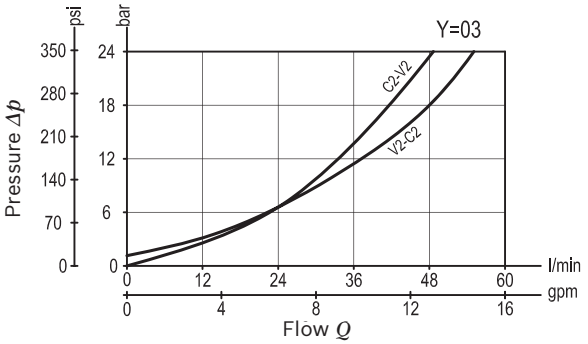

Ordering code

08.45.17	X	Y	Z

Single counterbalance, relief compensated

Pilot ratio

03	4.2 : 1

Port sizes	V1 - V2	C1 - C2	M
02	G 3/8	G 3/8	/
03	G 1/2	G 1/2	G 1/4

	SPRINGS		
	Adj. pressure range bar (psi)	Pres. increase bar/turn (psi/turn)	Std. setting Q=5 (l/min) bar (psi)
20	60-210 (870-3000)	75 (1088)	200 (2900)
35	100-350 (1450-5000)	165 (2393)	350 (5000)

Pressure setting up to 410 bar: code on request.

Tamper resistant cap code ordering code 11.04.23.003
Mat. no. R930000754

Preferred types

Type	Material number
08451703022000A	R930006858
08451703023500B	R930006857
08451703032000A	R930006921
08451703033500C	R930006922

Type	Material number

Dimensions

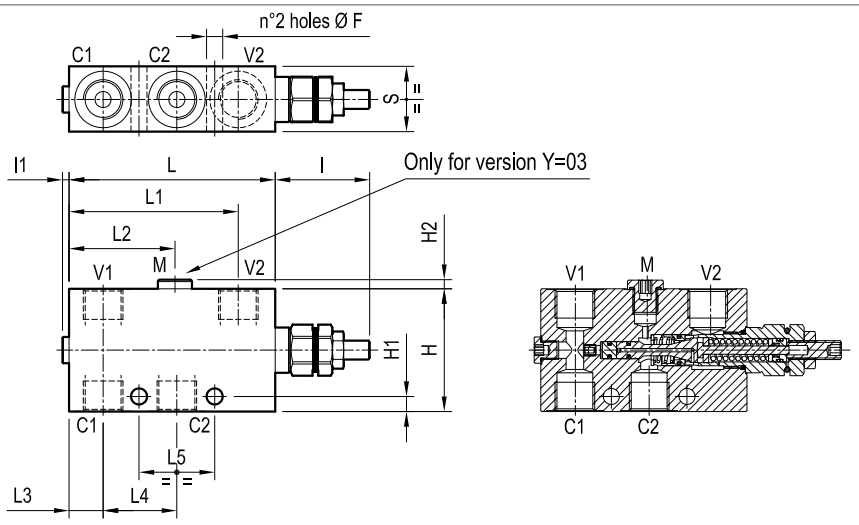

35 (1.38)	40 (1.58)	39.3 (1.55)	18 (0.71)	55.3 (2.18)	89.8 (3.54)	109 (4.29)	3.5 (0.14)	50 (1.97)	5 (0.2)	8 (0.32)	65 (2.56)	8.5 (0.34)			G 1/2	1.85 (4.08)
30 (1.18)	40 (1.58)	39.3 (1.55)	18 (0.71)	- -	88.3 (3.48)	109 (4.29)	3.5 (0.14)	50 (1.97)	5 (0.2)	8 (0.32)	55 (2.17)	8.5 (0.34)			G 3/8	1.33 (2.93)
S	L5	L4	L3	L2	L1	L	I1	I	H2	H1	H	F			Y	Weight kg (lbs)

Single counterbalance, relief compensated

A-VBSO-SE-CC-30-PL-FC1 08.45.19 - X - Y - Z

Description

When pressure at V2 rises above the spring bias pressure, the check seat is pushed away from the piston and flow is allowed from V2 to C2. When load pressure at C2 rises above the pressure setting, flow is relieved from C2 to V2. With pilot pressure at V1–C1, the pressure setting is reduced in proportion to the stated ratio of the valve, until opening and allowing flow from C2 to V2. The spring chamber is drained to V2. The valve applies a balanced piston and relief is operated at the valve setting independent of back-pressure at V2. However, the piloted opening of the valve remains subject to additive pressure at port V2. For safety and compactness, the C2 port is gasket mounted the actuator.

Note: port identified with M are not protected with calibrated orifice but in direct connection with pressure channels.

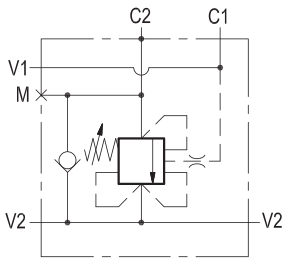

Technical data

Max. operating pressure	410 bar (5945 psi)
Max. flow	60 l/min. (16 gpm)
Weight	see “Dimensions”
Manifold material	Zinc plated steel
Flange seal kit [1)]	E00000000000056 (R930060579)
Fluid	Mineral oil (HL, HLP) according DIN 51524
Fluid temperature range	-30 °C to 100 (-22 to 212 °F)
Viscosity range	5 to 800 mm^2/s (cSt)
Recommended degree of fluid contamination	Class 19/17/14 according to ISO 4406
MTTFd	150 years see data sheet 18350-51
Other technical data	see data sheet 18350-50
Relief setting: at least 1.3 times the highest expected load.	

Note: for applications outside these parameters, please consult us.

[1)] Seals for 10 valves.

Characteristic curve

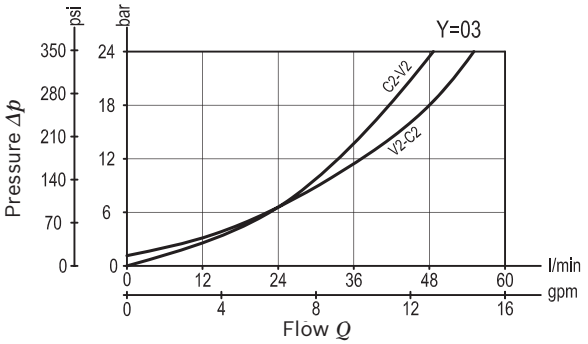

Dimensions [mm (inches)]

Ordering code

08.45.19	X	Y	Z

Single counterbalance, relief compensated

Pilot ratio

03	4.2 : 1

Port sizes	V1 - V2 - C1	C2	M
02	G 3/8	Ø 9 (0.35)	G 1/4
03	G 1/2	Ø 9 (0.35)	G 1/4

	SPRINGS		
	Adj. pressure range bar (psi)	Pres. increase bar/turn (psi/turn)	Std. setting Q=5 (l/min) bar (psi)
20	60-210 (870-3000)	75 (1088)	200 (2900)
35	100-350 (1450-5000)	165 (2393)	350 (5000)

Pressure setting up to 410 bar: code on request.

Tamper resistant cap code
ordering code 11.04.23.003
Mat. no. R930000754

Preferred types

Type	Material number
08451903022000A	R930050435
08451903023500B	R930006213
08451903032000A	R930007175
08451903033500B	R930007174

Type	Material number

Dimensions

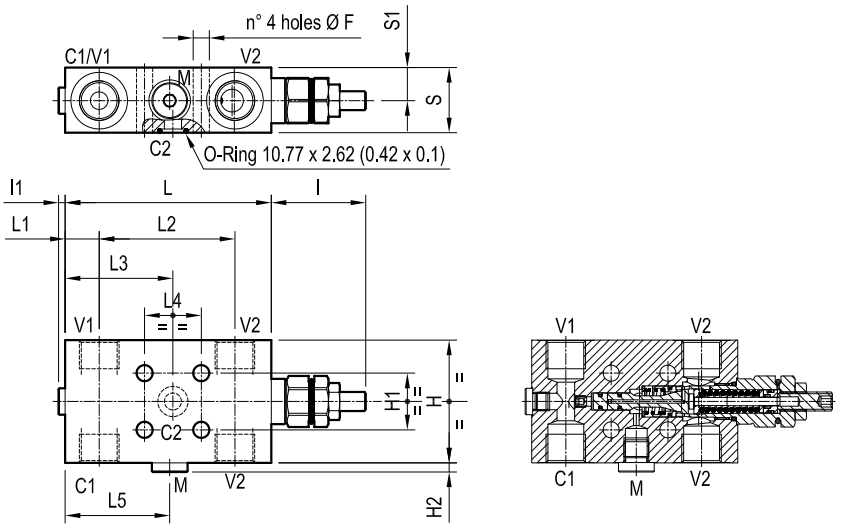

17.5 (0.69)	34.5 (1.36)	53.7 (2.11)	30 (1.18)	52 (2.05)	70.3 (2.77)	19.2 (0.76)	109 (4.29)	4.5 (0.18)	50 (1.97)	5 (0.2)	30 (1.18)	65 (2.56)	8.5 (0.34)		G 1/2	1.81 (3.99)
15 (0.59)	29.5 (1.16)	51.7 (2.04)	30 (1.18)	51.7 (2.04)	70.3 (2.77)	20.7 (0.82)	109 (4.29)	4.5 (0.18)	50 (1.97)	5 (0.2)	30 (1.18)	55 (2.17)	8.5 (0.34)		G 3/8	1.29 (2.84)
S	S	L5	L4	L3	L2	L1	L	I1	I	H2	H1	H	F		Y	Weight kg (lbs)

Single counterbalance, relief compensated

A-VBSO-SE-CC-30-PL-FC2 08.45.21 - X - Y - Z

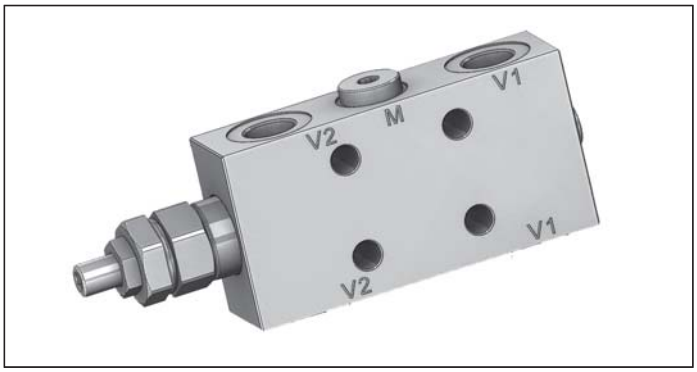

Description

When pressure at V2 rises above the spring bias pressure, the check seat is pushed away from the piston and flow is allowed from V2 to C2. When pressure at C2 rises above the setting, flow is relieved from C2 to V2. With pilot pressure at V1–C1, the pressure setting is reduced in proportion to the stated ratio of the valve, until opening and allowing flow from C2 to V2. The spring chamber is drained to V2. The valve applies a balanced piston design allowing relief operation at the valve setting independent of back-pressure at V2. However, the piloted opening of the valve remains subject to additive pressure at port V2. For better safety and compact assembly, the C1 and C2 ports are gasket mounted directly on the actuator.

Note: port identified with M are not protected with calibrated orifice but in direct connection with pressure channels.

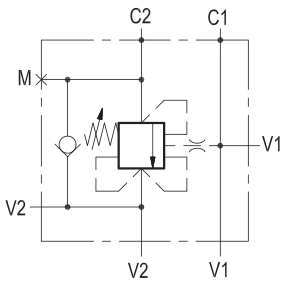

Technical data

Max. operating pressure	410 bar (5945 psi)
Max. flow	60 l/min. (16 gpm)
Weight	see “Dimensions”
Manifold material	Zinc plated steel
Flange seal kit [1)]	E00000000000014 (R930005947)
Fluid	Mineral oil (HL, HLP) according DIN 51524
Fluid temperature range	-30 °C to 100 (-22 to 212 °F)
Viscosity range	5 to 800 mm^2/s (cSt)
Recommended degree of fluid contamination	Class 19/17/14 according to ISO 4406
MTTFd	150 years see data sheet 18350-51
Other technical data	see data sheet 18350-50
Relief setting: at least 1.3 times the highest expected load.	

Note: for applications outside these parameters, please consult us.

[1)] Seals for 10 valves.

Characteristic curve

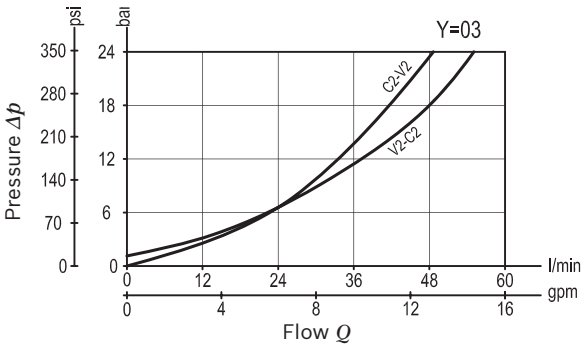

Ordering code

08.45.21	X	Y	Z

Single counterbalance, relief compensated

Pilot ratio

03	4.2 : 1

Port sizes	V1 - V2 - C1	C2	M
02	G 3/8	Ø 9 (0.35)	G 1/4
03	G 1/2	Ø 9 (0.35)	G 1/4

	SPRINGS		
	Adj. pressure range bar (psi)	Pres. increase bar/turn (psi/turn)	Std. setting Q=5 (l/min) bar (psi)
20	60-210 (870-3000)	75 (1088)	200 (2900)
35	200-350 (2900-5000)	168 (2436)	350 (5000)

Pressure setting up to 410 bar: code on request.

Tamper resistant cap code
ordering code 11.04.23.003
Mat. no. R930000754

Preferred types

Type	Material number
084521030220000	R930001940
08452103023500B	R930006771
084521030320000	R930001939
08452103033500B	R930006938

Type	Material number

Dimensions

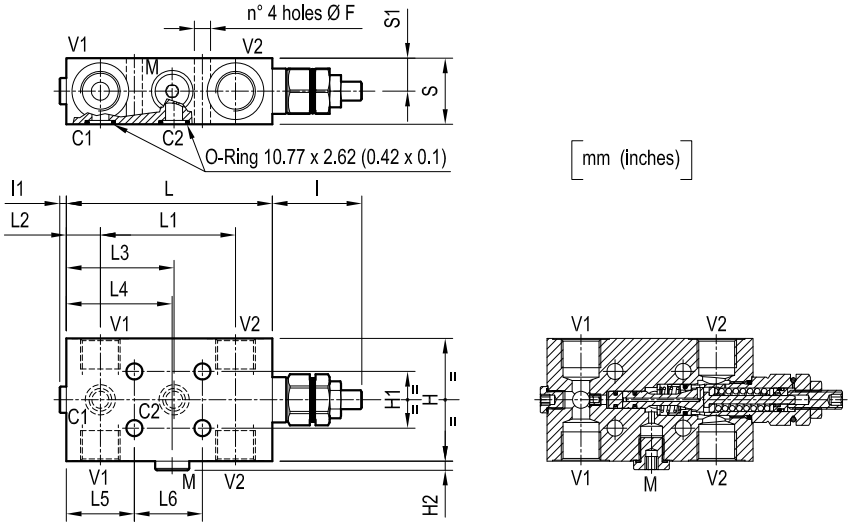

17.5 (0.69)	34.5 (1.36)	36 (1.42)	36 (1.42)	55.3 (2.18)	57 (2.24)	18 (0.71)	71.8 (2.83)	109 (4.29)	3.5 (0.14)	47.5 (2.07)	4.5 (0.18)	30 (1.18)	65 (2.56)	8.5 (0.34)	G 1/2	1.81 (3.99)
15 (0.59)	29.5 (1.16)	36 (1.42)	36 (1.42)	55.3 (2.18)	57.3 (2.26)	18 (0.71)	70.3 (2.77)	109 (4.29)	3.5 (0.14)	47.3 (1.86)	4.5 (0.18)	30 (1.18)	55 (2.17)	8.5 (0.34)	G 3/8	1.29 (2.84)
S1	S	L6	L5	L4	L3	L2	L1	L	l1	l	H2	H1	H	F	Y	Weight kg (lbs)

Single counterbalance, relief compensated

VBSO-SE-CC

05.41.06 - X - Y - Z

Technical data

Operating pressure	up to 210 bar (3000 psi)
Max. flow	see performance graph
Weight	see “Dimensions”
Manifold material	Aluminium
Note: aluminium bodies are often strong enough for operating pressures exceeding 210 bar (3000 psi), depending from the fatigue life expected in the specific application. If in doubt, consult our Service Network.	
Fluid	Mineral oil (HL, HLP) according DIN 51524
Fluid temperature range	-30 °C to 100 (-22 to 212 °F)
Viscosity range	5 to 800 mm^2/s (cSt)
Recommended degree of fluid contamination	Class 19/17/14 according to ISO 4406
Other technical data	see data sheet 18350-50
Relief setting: at least 1.3 times the highest expected load.	

Note: for applications outside these parameters, please consult us.

Description

When pressure at V2 rises above the spring bias pressure, the check valve poppet is pushed away from the piston and flow is allowed from V2 to C2. When load pressure at C2 rises above the pressure setting, the relief function is activated and flow is relieved from C2 to V2. With pilot pressure at V1–C1, the pressure setting is reduced in proportion to the pilot ratio, until opening and allowing flow from C2 to V2. The spring chamber is drained to V2. The valve applies a balanced piston allowing relief operation at the valve setting independent of back-pressure at V2. However, the piloted opening of the valve remains subject to additive pressure at port V2.

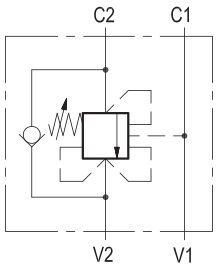

Characteristic curve

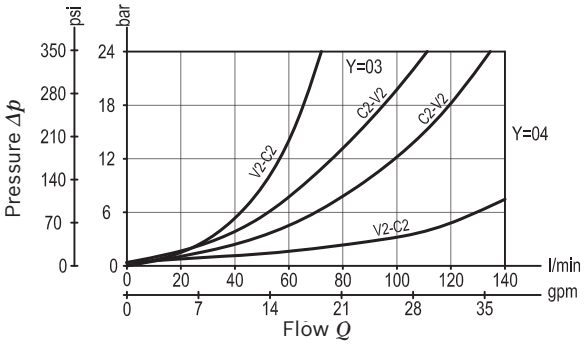

Dimensions [mm (inches)]

Ordering code

05.41.06	X	Y	Z

Single counterbalance, relief compensated

Pilot ratio	
02	8.2 : 1
10	3.2 : 1

Port sizes	V1 - V2	C1 - C2	
03	G 1/2	G 1/2	
04	G 3/4	G 3/4	

	SPRINGS		
	Adj. pressure range bar (psi)	Pres. increase bar/turn (psi/turn)	Std. setting Q=5 (l/min) bar (psi)
20	60-210 (870-3000)	54 (783)	200 (2900)
35	100-350 (1450-5000)	95 (1378)	350 (5000)

Tamper resistant cap code
ordering code 03.05.01.001
Mat. no. R930000470

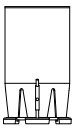

Preferred types

Type	Material number
054106020320000	R930001670
05410602033500A	R930001671
054106020420000	R930001674
05410602043500A	R930001675
054106100320000	R930001678

Type	Material number
05410610033500A	R930001680
054106100420000	R930001941
054106100435000	R930001687

Dimensions

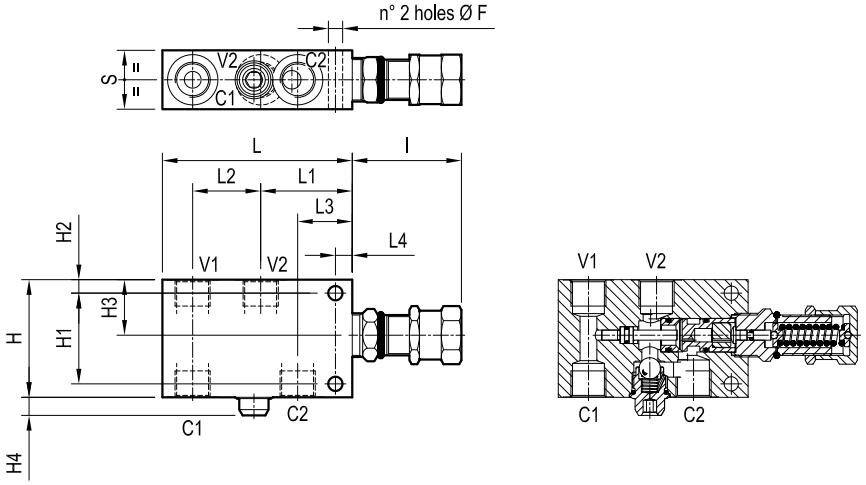

40 (1.58)	10 (0.39)	34 (1.34)	54.5 (2.15)	62.5 (2.46)	135 (5.32)	65 (2.56)	11 (0.43)	38 (1.5)	9.5 (0.37)	70 (2.76)	89 (3.5)		10.5 (0.41)		G 3/4	1.42 (3.13)
35 (1.38)	10 (0.39)	32.5 (1.28)	40.5 (1.6)	54.5 (2.15)	113 (4.55)	65 (2.56)	11 (0.43)	33.5 (1.32)	7.5 (0.3)	54 (2.13)	70 (2.76)		8.5 (0.34)		G 1/2	0.9 (1.98)
S	L4	L3	L2	L1	L	l	H4	H3	H2	H1	H		F		Y	Weight kg (lbs)

Single counterbalance, vented

A-VBSO-SE-CCAP-78

08.45.98 - X - Y - Z

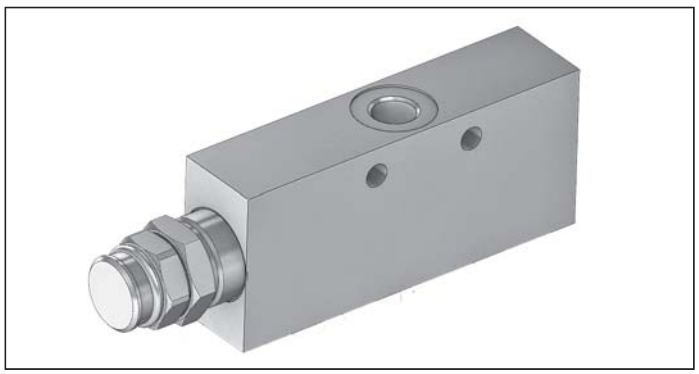

Technical data

Max. operating pressure	350 bar (5000 psi)
Max. flow	40 l/min. (11 gpm)
Weight	1.2 kg (2.6 lbs)
Manifold material	Zinc plated steel
Fluid	Mineral oil (HL, HLP) according DIN 51524
Fluid temperature range	-30 °C to 100 (-22 to 212 °F)
Viscosity range	5 to 800 mm^2/s (cSt)
Recommended degree of fluid contamination	Class 19/17/14 according to ISO 4406
Other technical data	see data sheet 18350-50
Relief setting: at least 1.3 times the load induced pressure.	
The pilot line includes adjustable hydraulic damping, for fine tuning of stability and response.	

Note: for applications outside these parameters, please consult us.

Description

When pressure at V2 rises above the spring bias pressure, the check seat is pushed away from the piston and flow is allowed from V2 to C2. When load pressure at C2 rises above the pressure setting, the direct-acting, differential area, relief function is activated and flow is relieved from C2 to V2. With pilot pressure at V1–C1 , the pressure setting is reduced in proportion to the stated ratio of the valve, until opening and allowing flow from C2 to V2. The spring chamber is vented to atmosphere allowing operation of all functions independent of back-pressure at V2.

Note: port identified with M are not protected with calibrated orifice but in direct connection with pressure channels.

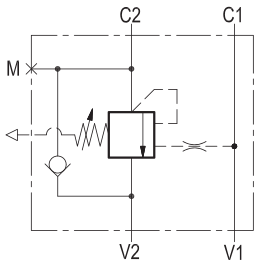

Characteristic curve

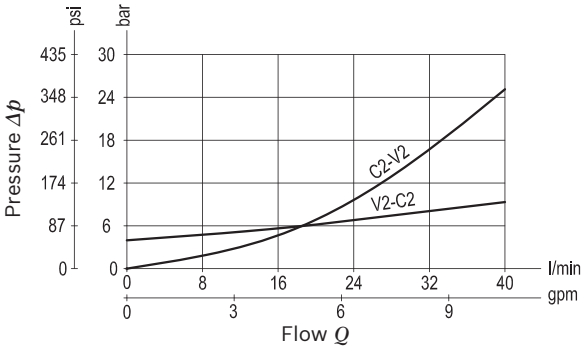

Ordering code

08.45.98	X	Y	Z

Single counterbalance

Pilot ratio

03	4.1 : 1

Port sizes	V1 - V2	C1 - C2	M
09	G 1/4	G 1/4	G 1/8

	SPRINGS		
	Adj. pressure range bar (psi)	Pres. increase bar/turn (psi/turn)	Std. setting Q=5 (l/min) bar (psi)
35	180-350 (2610-5000)	140 (2000)	350 (5000)

Tamper resistant cap code
ordering code 11.04.36.001
Mat. no. R930005189

Preferred types

Type	Material number
084598030935000	R930004316

Type	Material number

Dimensions

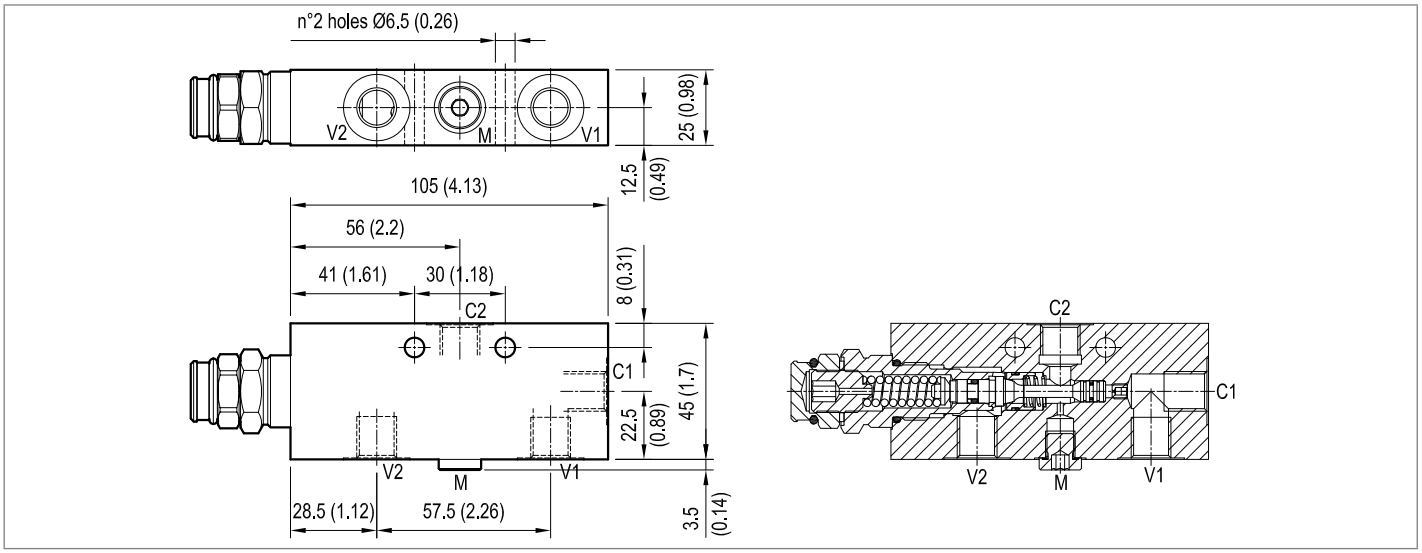

Single counterbalance, vented

A-VBSO-SE-CCAP-33-PL

08.45.86 - X - Y - Z

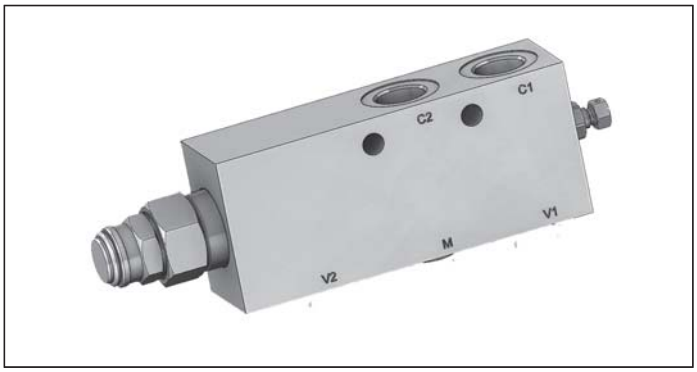

Technical data

Max. operating pressure	410 bar (5945 psi)
Max. flow	150 l/min. (40 gpm)
Weight	see “Dimensions”
Manifold material	Zinc plated steel
Fluid	Mineral oil (HL, HLP) according DIN 51524
Fluid temperature range	-30 °C to 100 (-22 to 212 °F)
Viscosity range	5 to 800 mm^2/s (cSt)
Recommended degree of fluid contamination	Class 19/17/14 according to ISO 4406
MTTFd	150 years see 18350-51
Other technical data	see data sheet 18350-50
Relief setting: at least 1.3 times the load induced pressure.	
The pilot line includes adjustable hydraulic damping, for fine tuning of stability and response.	

Note: for applications outside these parameters, please consult us.

Description

When pressure at V2 rises above the spring bias pressure, the check seat is pushed away from the piston and flow is allowed from V2 to C2. When load pressure at C2 rises above the pressure setting, the direct-acting, differential area, relief function is activated and flow is relieved from C2 to V2. With pilot pressure at V1–C1 , the pressure setting is reduced in proportion to the stated ratio of the valve, until opening and allowing flow from C2 to V2. The spring chamber is vented to atmosphere allowing operation of all functions independent of back-pressure at V2.

Note: port identified with M are not protected with calibrated orifice but in direct connection with pressure channels.

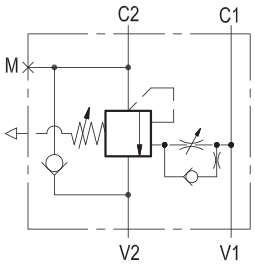

Characteristic curve

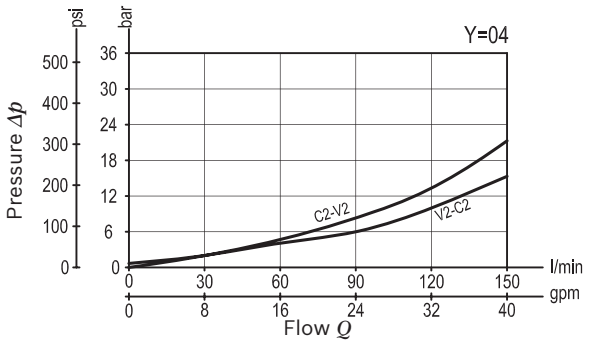

Ordering code

08.45.86	X	Y	Z

Single counterbalance, vented

Pilot ratio

13	4:1
15	8:1

Port sizes	V1 - V2	C1 - C2	M
03	G 1/2	G 1/2	G 1/4
04	G 3/4	G 3/4	G 1/4

		SPRINGS		
		Adj. pressure range bar (psi)	Pres. increase bar/turn (psi/turn)	Std. setting Q=5 (l/min) bar (psi)
35	for X=13	150-350 (2200-5000)	110 (1595)	350 (5000)
	for X=15	150-350 (2200-5000)	84 (1218)	350 (5000)

Pressure setting up to 410 bar: code on request.

Tamper resistant cap code
ordering code 11.04.30.001
Mat. no. R930005194

Preferred types

Type	Material number
08458613033500E	R930007660
08458613043500D	R930050617

Type	Material number
08458615033500D	R930007661
08458615043500D	R930050618

Dimensions

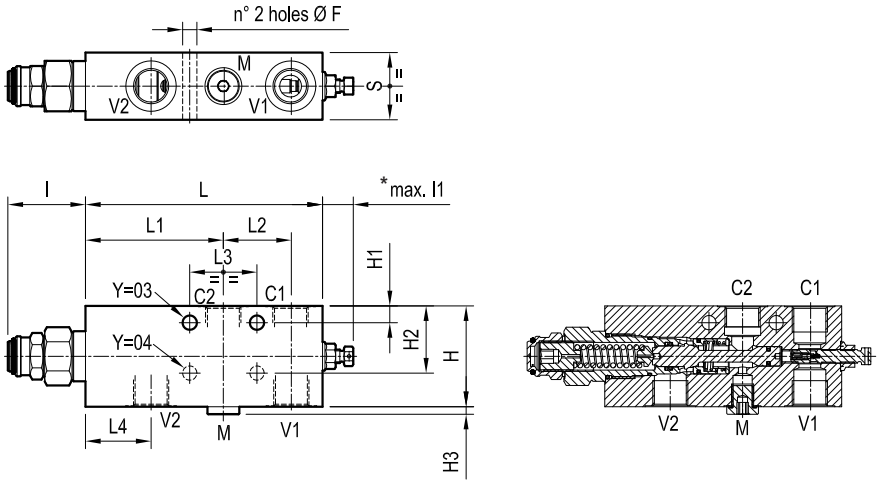

40 (1.58)	39 (1.54)	40 (1.58)	43 (1.69)	82 (3.23)	147 (5.79)	16 (0.63)	46.5 (1.83)	4.5 (0.18)	60 (2.36)	- -	80 (3.15)	10.5 (0.41)		G 3/4	3.1 (6.8)
40 (1.58)	39 (1.54)	40 (1.58)	40 (1.58)	82 (3.23)	141 (5.55)	16.5 (0.65)	46.5 (1.83)	4.5 (0.18)	- -	10 (0.39)	60 (2.36)	8.5 (0.34)		G 1/2	2.4 (5.3)
S	L4	L3	L2	L1	L	I1	I	H3	H2	H1	H	F		Y	Weight kg (lbs)

* The adjusting screw can be completely unscrewed. Do not exceed the indicated protrusion range of the adjusted screw.

Single counterbalance, vented

A-VBSO-SE-CCAP-33-PL-FC1 08.45.88 - X - Y - Z

Description

When pressure at V2 rises above the spring bias pressure, the check seat is pushed away from the piston and flow is allowed from V2 to C2. When load pressure at C2 rises above the pressure setting, the relief function is activated and flow is relieved from C2 to V2. With pilot pressure at V1–C1, the pressure setting is reduced in proportion to the pilot ratio, until opening and allowing flow from C2 to V2. The spring chamber is vented to atmosphere allowing operation of all functions independent of back-pressure at V2. For better safety and compact assembly, the C2 port is gasket mounted directly on the actuator.

Note: port identified with M are not protected with calibrated orifice but in direct connection with pressure channels.

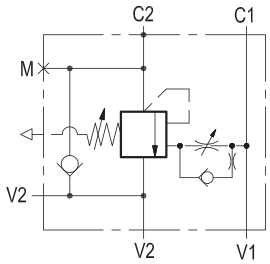

Technical data

Max. operating pressure	410 bar (5945 psi)
Max. flow	150 l/min. (40 gpm)
Weight	see “Dimensions”
Manifold material	Zinc plated steel
Flange seal kit [1]	E00000000000057 (R930060587)
Fluid	Mineral oil (HL, HLP) according DIN 51524
Fluid temperature range	-30 °C to 100 (-22 to 212 °F)
Viscosity range	5 to 800 mm^2/s (cSt)
Recommended degree of fluid contamination	Class 19/17/14 according to ISO 4406
MTTFd	150 years see 18350-51
Other technical data	see data sheet 18350-50
Relief setting: at least 1.3 times the highest expected load.	
The pilot line includes adjustable hydraulic damping, for fine tuning of stability and response.	

Note: for applications outside these parameters, please consult us.

[1] Seals for 10 valves.

Characteristic curve

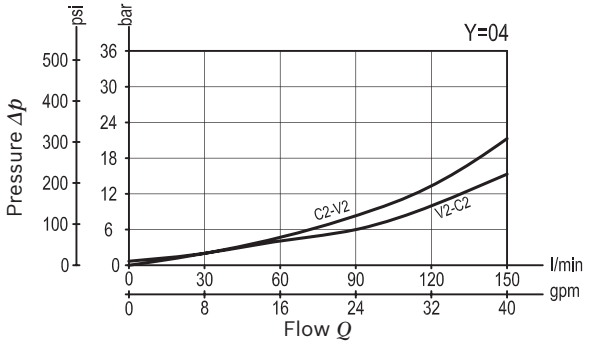

Ordering code

08.45.88	X	Y	Z

Single counterbalance, vented

Pilot ratio	
13	4:1
15	8:1

Port sizes	V1 - V2 -C1	C2	M
03	G 1/2	Ø 12 (0.47)	G 1/4
04	G 3/4	Ø 12 (0.47)	G 1/4

		SPRINGS		
		Adj. pressure range bar (psi)	Pres. increase bar/turn (psi/turn)	Std. setting Q=5 (l/min) bar (psi)
35	for X=13	150-350 (2200-5000)	110 (1595)	350 (5000)
	for X=15	150-350 (2200-5000)	84 (1218)	350 (5000)

Pressure setting up to 410 bar: code on request.

Tamper resistant cap code
ordering code 11.04.30.001
Mat. no. R930005194

Preferred types

Type	Material number
08458813033500E	R930008378
08458813043500D	R930050622

Type	Material number
08458815033500D	R930050624
08458815043500D	R930008411

Dimensions

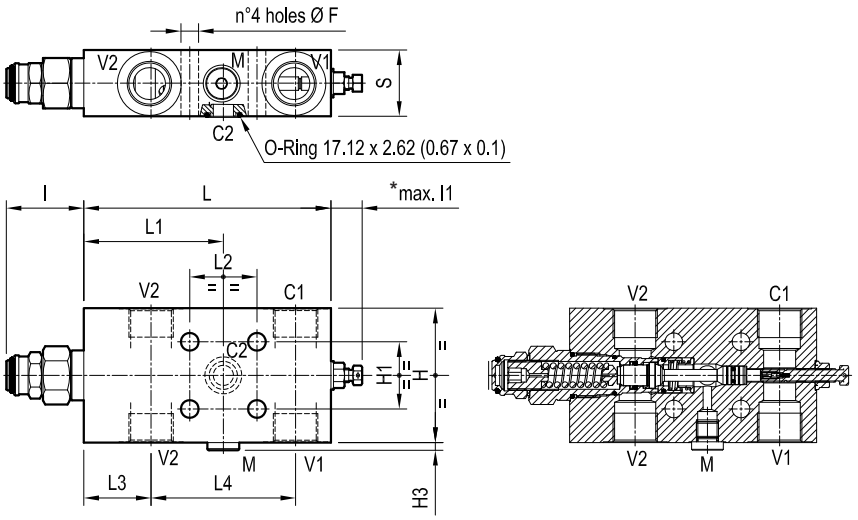

39.5 (1.56)	86 (3.39)	39 (1.54)	40 (1.58)	82 (3.23)	147 (5.79)	15.5 (0.61)	46 (1.81)	4.5 (0.18)	40 (1.58)	80 (3.15)			10.5 (0.41)		G 3/4	3 (6.6)
39.5 (1.56)	83 (3.27)	39 (1.54)	40 (1.58)	82 (3.23)	141 (5.55)	16.5 (0.65)	46 (1.81)	4.5 (0.18)	40 (1.58)	60 (2.36)			10.5 (0.41)		G 1/2	2.3 (5.1)
S	L4	L3	L2	L1	L	l1	l	H3	H1	H			F		Y	Weight kg (lbs)

* The adjusting screw can be completely unscrewed. Do not exceed the indicated protrusion range of the adjusted screw.

Single counterbalance, vented

A-VBSO-SE-CCAP-33-PL-FC2 08.45.92 - X - Y - Z

Description

When pressure at V2 rises above the spring bias pressure, the check seat is pushed away from the piston and flow is allowed from V2 to C2. When load pressure at C2 rises above the pressure setting, the relief function is activated and flow is relieved from C2 to V2. With pilot pressure at V1–C1 , the pressure setting is reduced in proportion to the pilot ratio, until opening and allowing flow from C2 to V2. The spring chamber is vented to atmosphere allowing operation of all functions independent of back-pressure at V2. For better safety and compact assembly, the C1 and C2 ports are gasket mounted directly on the actuator.

Note: port identified with M are not protected with calibrated orifice but in direct connection with pressure channels.

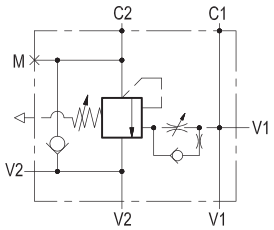

Technical data

Max. operating pressure	410 bar (5945 psi)
Max. flow	150 l/min. (40 gpm)
Weight	see “Dimensions”
Manifold material	Zinc plated steel
Flange seal kit [1)]	E00000000000057 (R930060587)
Fluid	Mineral oil (HL, HLP) according DIN 51524
Fluid temperature range	-30 °C to 100 (-22 to 212 °F)
Viscosity range	5 to 800 mm^2/s (cSt)
Recommended degree of fluid contamination	Class 19/17/14 according to ISO 4406
MTTFd	150 years see 18350-51
Other technical data	see data sheet 18350-50
Relief setting: at least 1.3 times the highest expected load.	
The pilot line includes adjustable hydraulic damping, for line tuning of stability and response.	

Note: for applications outside these parameters, please consult us.

[1)] Seals for 5 valves.

Characteristic curve

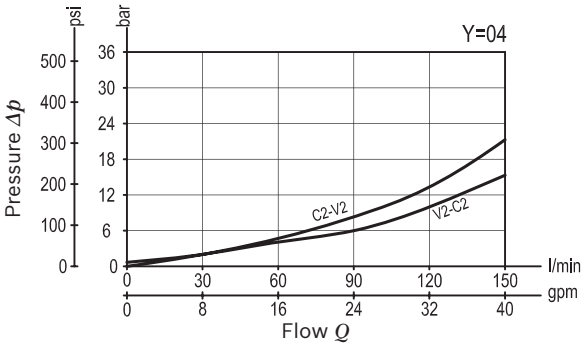

Ordering code

08.45.92	X	Y	Z

Single counterbalance, vented

Pilot ratio

13	4 : 1

Port sizes	V1 - V2	C1 - C2	M
03	G 1/2	Ø 12 (0.47)	G 1/4
04	G 3/4	Ø 12 (0.47)	G 1/4

	SPRINGS		
	Adj. pressure range bar (psi)	Pres. increase bar/turn (psi/turn)	Std. setting Q=5 (l/min) bar (psi)
35	150-350 (2200-5000)	110 (1595)	350 (5000)

Pressure setting up to 410 bar: code on request.

Tamper resistant cap code
ordering code 11.04.30.001
Mat. no. R930005194

Preferred types

Type	Material number
08459213033500C	R930050625
08459213043500D	R930050627

Type	Material number

Dimensions

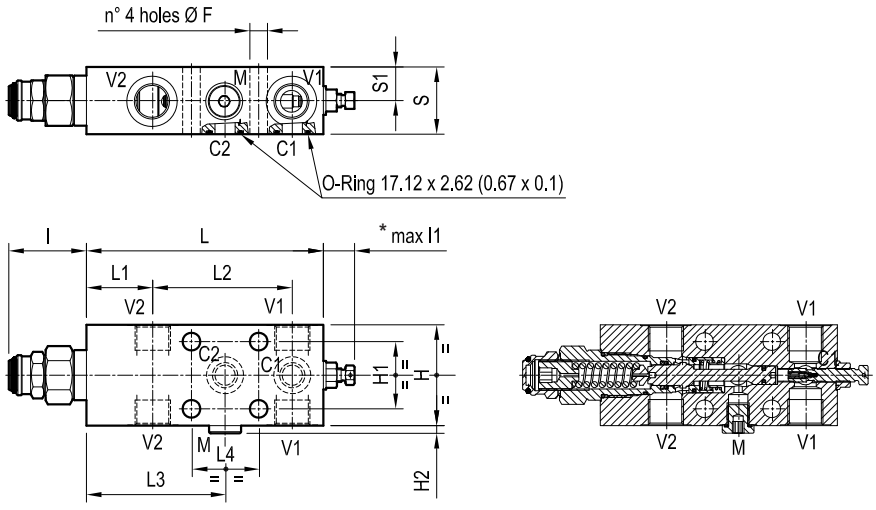

20 (0.79)	39.5 (1.56)	40 (1.58)	83 (3.27)	86 (3.39)	40 (1.58)	147 (5.79)	16 (0.63)	46 (1.81)	4.6 (0.18)	40 (1.58)	80 (3.15)	10.5 (0.41)			G 3/4	3 (6.6)
20 (0.79)	39.5 (1.56)	40 (1.58)	82 (3.23)	83 (3.27)	39 (1.54)	141 (5.55)	17.5 (0.69)	46 (1.81)	4.6 (0.18)	40 (1.58)	60 (2.36)	10.5 (0.41)			G 1/2	2.3 (5.1)
S1	S	L4	L3	L2	L1	L	I1	I	H2	H1	H	F			Y	Weight kg (lbs)

* The adjusting screw can be completely unscrewed. Do not exceed the indicated protrusion range of the adjusted screw.

Single counterbalance, vented

A-VBSO-SE-CCAP-42

08.49.91 - X - Y - Z

Technical data

Max. operating pressure	410 bar (5945 psi)
Max. flow	350 l/min. (92 gpm)
Weight	5.8 kg (13 lbs)
Manifold material	Zinc plated steel
Fluid	Mineral oil (HL, HLP) according DIN 51524
Fluid temperature range	-30 °C to 100 (-22 to 212 °F)
Viscosity range	5 to 800 mm^2/s (cSt)
Recommended degree of fluid contamination	Class 19/17/14 according to ISO 4406
Other technical data	see data sheet 18350-50
Relief setting: at least 1.3 times the load induced pressure.	
The pilot line includes adjustable hydraulic damping, for fine tuning of stability and response.	

Note: for applications outside these parameters, please consult us.

Description

When pressure at V2 rises above the spring bias pressure, the check seat is pushed away from the piston and flow is allowed from V2 to C2. When load pressure at C2 rises above the pressure setting, the direct operated, differential area, relief function is activated and flow is relieved from C2 to V2. With pilot pressure at Pil, the pressure setting is reduced in proportion to the stated ratio of the valve, until opening and allowing flow from C2 to V2. The spring chamber is vented to atmosphere allowing operation of all functions independent of
back-pressure at V2.

Note: port identified with M are not protected with calibrated orifice but in direct connection with pressure channels.

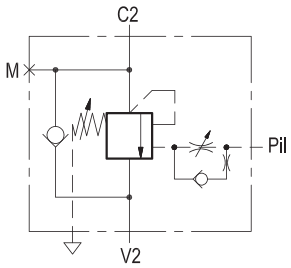

Characteristic curve

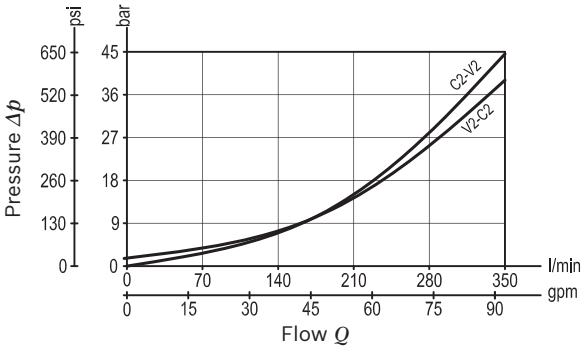

Dimensions [mm (inches)]

Ordering code

08.49.91	X	Y	Z

Single counterbalance, vented

Pilot ratio

13	4 : 1

Port sizes	C2 - V2	Pil	M
05	G 1	G 1/4	G 1/4

	SPRINGS		
	Adj. pressure range bar (psi)	Pres. increase bar/turn (psi/turn)	Std. setting Q=5 (l/min) bar (psi)
35	120-350 (1740-5000)	73 (1059)	350 (5000)

Pressure setting up to 410 bar: code on request.

Preferred types

Type	Material number
08499113053500A	R930050628

Type	Material number

Dimensions

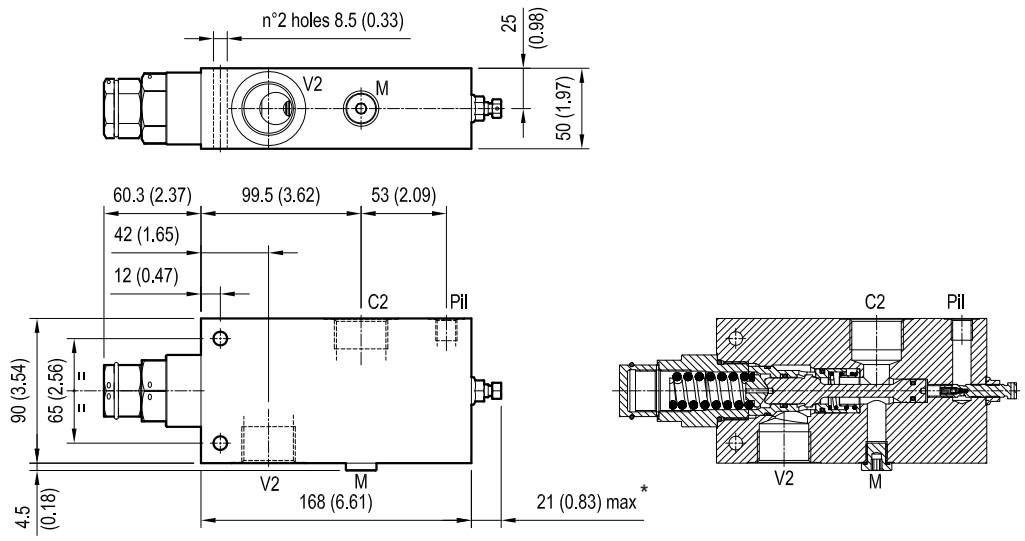

* The adjusting screw can be completely unscrewed. Do not exceed the indicated protrusion range of the adjusted screw.

Dual counterbalance

A-VBSO-DE-78

08.46.11 - X - Y - Z

Technical data

Max. operating pressure	350 bar (5000 psi)
Max. flow	40 l/min. (11 gpm)
Weight	1.2 kg (2.7 lbs)
Manifold material	Zinc plated steel
Fluid	Mineral oil (HL, HLP) according DIN 51524
Fluid temperature range	-30 °C to 100 (-22 to 212 °F)
Viscosity range	5 to 800 mm^2/s (cSt)
Recommended degree of fluid contamination	Class 19/17/14 according to ISO 4406
Other technical data	see data sheet 18350-50
Relief setting: at least 1.3 times the load induced pressure.	

Note: for applications outside these parameters, please consult us.

Description

It provides static and dynamic control of load by regulating the flow IN and OUT of the actuator, through ports C1 and C2. This valve module includes 2 sections, each one composed by a check and a relief valve pilot assisted by pressure in the opposite line: the check section allows free flow into the actuator, then locks the load against reverse movement; with pilot pressure applied at the line across, the pressure setting of the relief is reduced in proportion to the stated ratio until opening and allowing controlled reverse flow. Back-pressure at V1 or V2 is additive to the pressure settings in all functions.

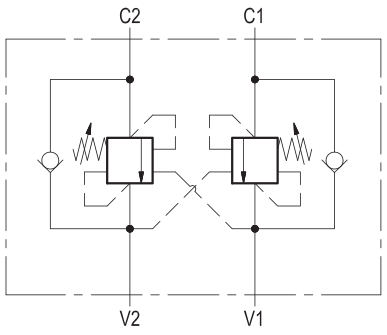

Characteristic curve

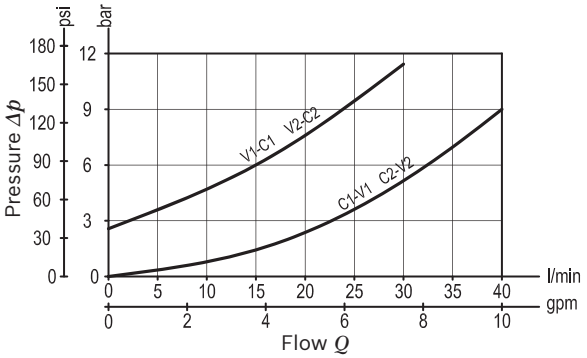

Dimensions [mm (inches)]

Ordering code

08.46.11	X	Y	Z

Dual counterbalance

Pilot ratio

03	4.1 : 1

Port sizes	V1 - V2	C1 - C2	
09	G 1/4	G 1/4	

	SPRINGS		
	Adj. pressure range bar (psi)	Pres. increase bar/turn (psi/turn)	Std. setting Q=5 (l/min) bar (psi)
35	200-350 (2900-5000)	175 (2538)	350 (5000)

Tamper resistant cap code
ordering code 11.04.23.002
Mat. no. R930000752

Preferred types

Type	Material number
084611030935000	R930003606

Type	Material number

Dimensions

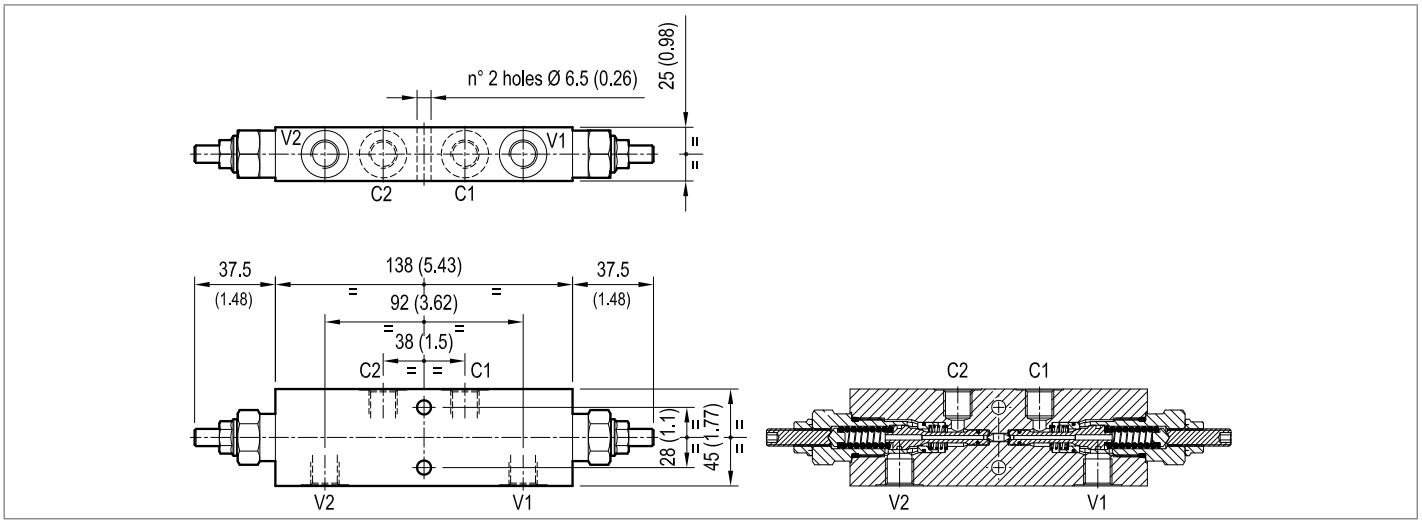

Dual counterbalance

A-VBSO-DE-78-FC2

08.46.36 - X - Y - Z

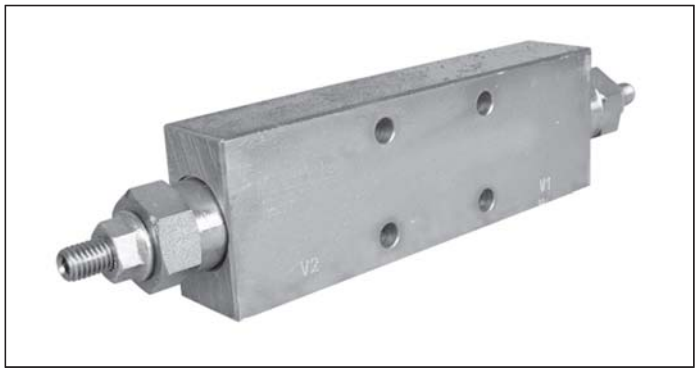

Description

It provides static and dynamic control of load by regulating the flow IN and OUT of the actuator, through ports C1 and C2. This valve module includes 2 sections, each one composed by a check and a relief valve pilot assisted by pressure in the opposite line: the check section allows free flow into the actuator, then holds the load against reverse movement; with pilot pressure applied at the line across, the pressure setting of the relief is reduced in proportion to the stated ratio until opening and allowing controlled reverse flow. Back-pressure at V1 or V2 is additive to the pressure setting in all functions. For better safety and compact assembly, the C1 and C2 ports are gasket mounted directly on the actuator.

Technical data

Max. operating pressure	350 bar (5000 psi)
Max. flow	40 l/min. (11 gpm)
Weight	1.2 kg (2.7 lbs)
Manifold material	Zinc plated steel
Flange seal kit [1)]	E00000000000031 (R930005645)
Fluid	Mineral oil (HL, HLP) according DIN 51524
Fluid temperature range	-30 °C to 100 (-22 to 212 °F)
Viscosity range	5 to 800 mm^2/s (cSt)
Recommended degree of fluid contamination	Class 19/17/14 according to ISO 4406
Other technical data	see data sheet 18350-50
Relief setting: at least 1.3 times the highest expected load.	

Note: for applications outside these parameters, please consult us.

[1)] Seals for 10 valves.

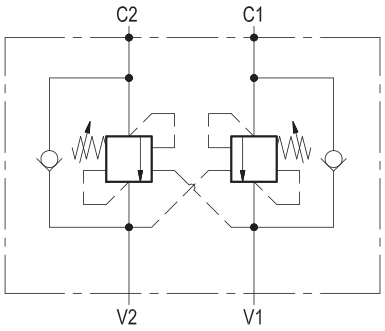

Characteristic curve

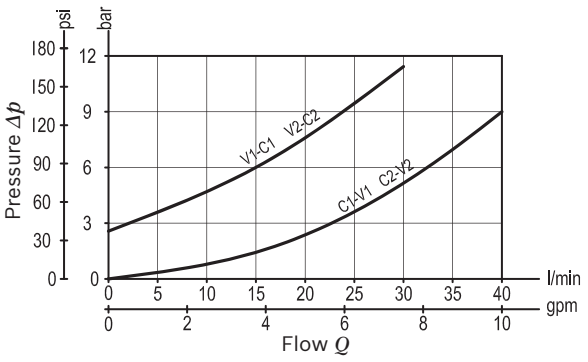

Ordering code

08.46.36	X	Y	Z

Dual counterbalance

Pilot ratio

03	4.1 : 1

Port sizes	V1 - V2	C1 - C2	
09	G 1/4	Ø 6 (0.24)	

	SPRINGS		
	Adj. pressure range bar (psi)	Pres. increase bar/turn (psi/turn)	Std. setting Q=5 (l/min) bar (psi)
35	200-350 (2900-5000)	175 (2538)	350 (5000)

Tamper resistant cap code
ordering code 11.04.23.002
Mat. no. R930000752

Preferred types

Type	Material number
084636030935000	R930003638

Type	Material number

Dimensions

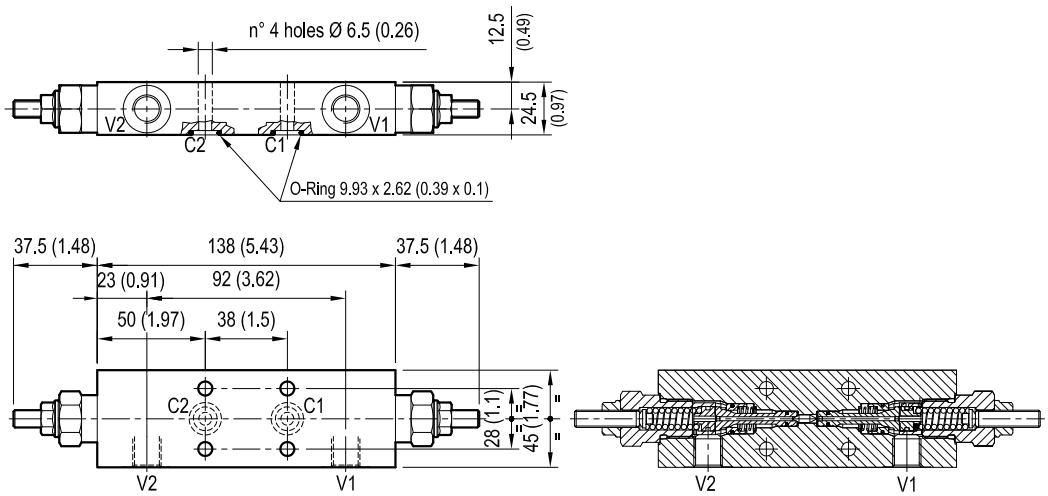

Dual counterbalance

VBSO-DE-NN

05.42.47 - X - Y - Z

Description

It provides static and dynamic control of load by regulating the flow IN and OUT of the actuator, through ports C1 and C2. This valve module includes 2 sections, each one composed by a check and a relief valve pilot assisted by pressure in the opposite line: the check section allows free flow into the actuator, then holds the load against reverse movement; with pilot pressure applied at the line across, the pressure setting of the relief is reduced in proportion to the stated ratio until opening and allowing controlled reverse flow. Back-pressure at V1 or V2 is additive to the pressure setting in all functions.

Technical data

Operating pressure	up to 210 bar (3000 psi)
Max. flow	40 l/min. (11 gpm)
Weight	0.8 kg (1.76 lbs)
Manifold material	Aluminium
Note: aluminium bodies are often strong enough for operating pressures exceeding 210 bar (3000 psi), depending from the fatigue life expected in the specific application. If in doubt, consult our Service Network.	
Fluid	Mineral oil (HL, HLP) according DIN 51524
Fluid temperature range	-30 °C to 100 (-22 to 212 °F)
Viscosity range	5 to 800 mm^2/s (cSt)
Recommended degree of fluid contamination	Class 19/17/14 according to ISO 4406
Other technical data	see data sheet 18350-50
Relief setting: at least 1.3 times the highest expected load.	

Note: for applications outside these parameters, please consult us.

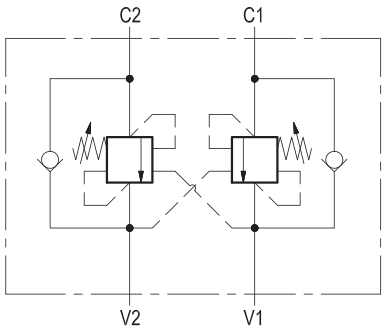

Characteristic curve

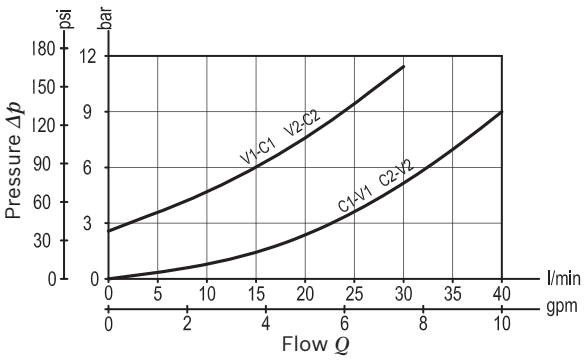

Dimensions [mm (inches)]

Ordering code

05.42.47	X	Y	Z

Dual counterbalance

Pilot ratio

03	6.6 : 1
10	2.9 : 1

Port sizes	V1 - V2	C1 - C2	
02	G 3/8	G 3/8	

	SPRINGS		
	Adj. pressure range bar (psi)	Pres. increase bar/turn (psi/turn)	Std. setting Q=5 (l/min) bar (psi)
20	60-210 (900-3000)	54 (783)	200 (2900)
35	120-350 (1750-5000)	118 (1711)	350 (5000)

Preferred types

Type	Material number
054247030220000	R930001858
054247030235000	R930001860

Type	Material number
054247100220000	R930001873
054247100235000	R930001875

Dimensions

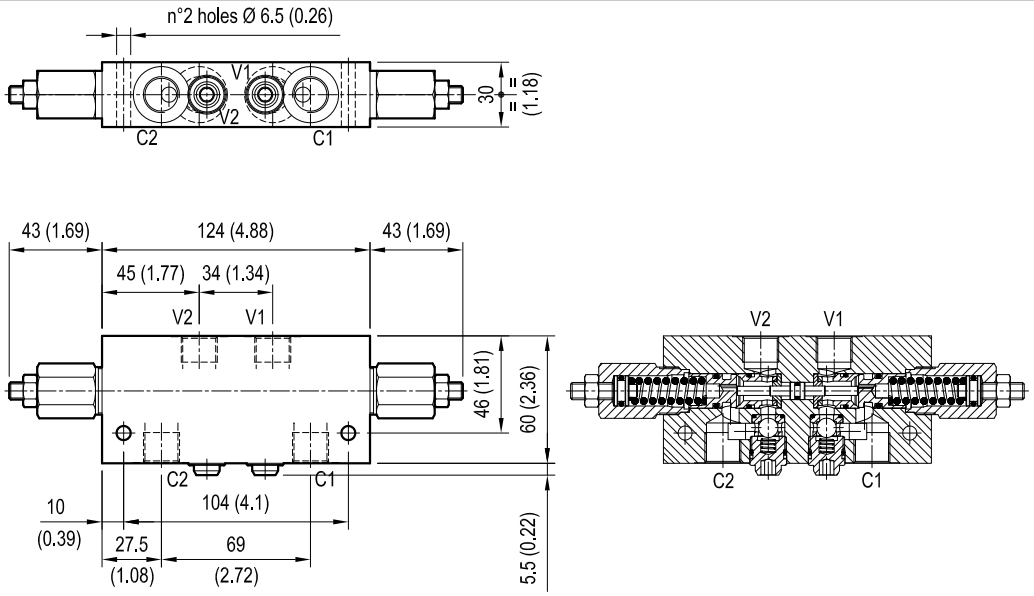

Dual counterbalance

VBSO-DE-NN-FC2 05.42.48 - X - Y - Z

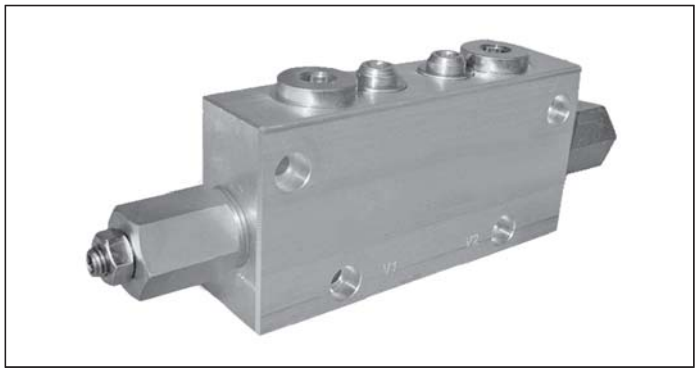

Description

It provides static and dynamic control of load by regulating the flow IN and OUT of the actuator, through ports C1 and C2. This valve module includes 2 sections, each one composed by a check and a relief valve pilot assisted by pressure in the opposite line: the check section allows free flow into the actuator, then holds the load against reverse movement; with pilot pressure applied at the line across, the pressure setting of the relief is reduced in proportion to the stated ratio until opening and allowing controlled reverse flow. Back-pressure at V1 or V2 is additive to the pressure setting in all functions. For better safety and compact assembly, the C1 and C2 ports are gasket mounted directly on the actuator.

Technical data

Operating pressure	up to 210 bar (3000 psi)
Max. flow	40 l/min. (11 gpm)
Weight	0.8 kg (1.76 lbs)
Manifold material	Aluminium
Note: aluminium bodies are often strong enough for operating pressures exceeding 210 bar (3000 psi), depending from the fatigue life expected in the specific application. If in doubt, consult our Service Network.	
Flange seal kit [1]	E00000000000014 (R930005947)
Fluid	Mineral oil (HL, HLP) according DIN 51524
Fluid temperature range	-30 °C to 100 (-22 to 212 °F)
Viscosity range	5 to 800 mm^2/s (cSt)
Recommended degree of fluid contamination	Class 19/17/14 according to ISO 4406
Other technical data	see data sheet 18350-50
Relief setting: at least 1.3 times the highest expected load.	

Note: for applications outside these parameters, please consult us.

[1] Seals for 10 valves.

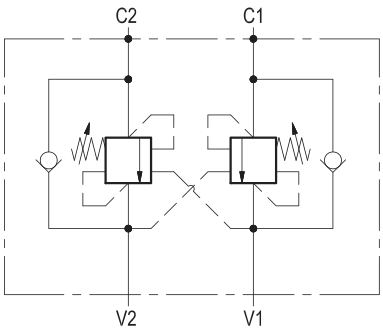

Characteristic curve

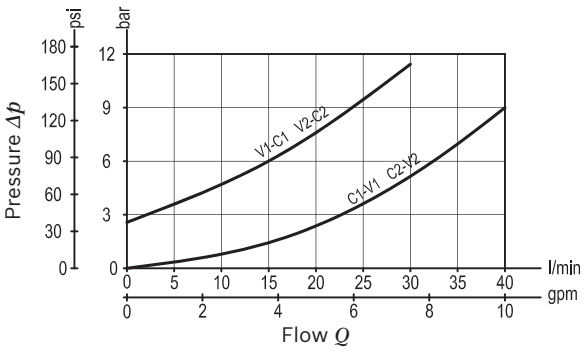

Dimensions [mm (inches)]

Ordering code

05.42.48	X	Y	Z

Dual counterbalance

Pilot ratio

03	6.6 : 1
10	2.9 : 1

Port sizes	V1 - V2	C1 - C2	
02	G 3/8	Ø 8 (0.32)	

	SPRINGS		
	Adj. pressure range bar (psi)	Pres. increase bar/turn (psi/turn)	Std. setting Q=5 (l/min) bar (psi)
20	60-210 (900-3000)	54 (783)	200 (2900)
35	120-350 (1750-5000)	118 (1711)	350 (5000)

Preferred types

Type	Material number
054248030220000	R930001879
054248030235000	R930001880

Type	Material number
054248100220000	R930001882
054248100235000	R930001883

Dimensions

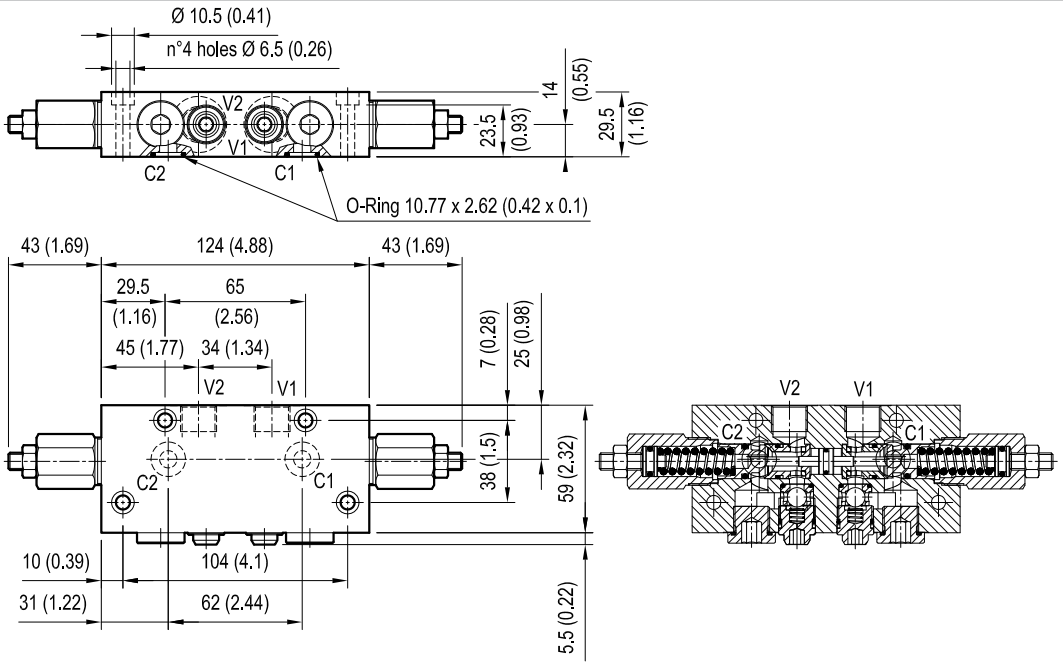

Dual counterbalance

A-VBSO-DE-30-PI

08.48.11 - X - Y - Z

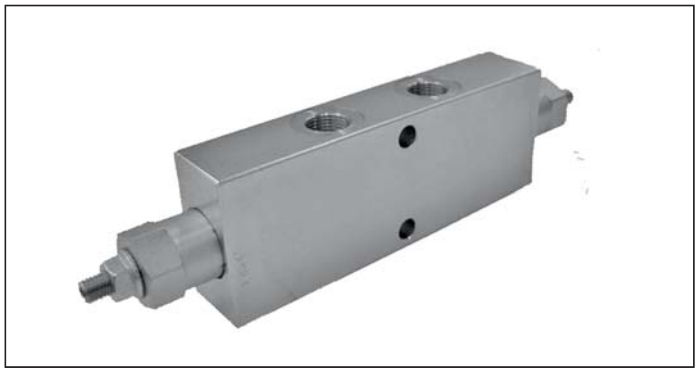

Technical data

Max. operating pressure	410 bar (5945 psi)
Max. flow	60 l/min. (16 gpm)
Weight	see “Dimensions”
Manifold material	Zinc plated steel
Fluid	Mineral oil (HL, HLP) according DIN 51524
Fluid temperature range	-30 °C to 100 (-22 to 212 °F)
Viscosity range	5 to 800 mm^2/s (cSt)
Recommended degree of fluid contamination	Class 19/17/14 according to ISO 4406
Other technical data	see data sheet 18350-50
Relief setting: at least 1.3 times the highest expected load.	

Note: for applications outside these parameters, please consult us.

Description

It provides static and dynamic control of load by regulating the flow IN and OUT of the actuator, through ports C1 and C2. This valve module includes 2 sections, each one composed by a check and a relief valve pilot assisted by pressure in the opposite line: the check section allows free flow into the actuator, then holds the load against reverse movement; with pilot pressure applied at the line across, the pressure setting of the relief is reduced in proportion to the stated ratio until opening and allowing controlled reverse flow. Back-pressure at V1 or V2 is additive to the pressure setting in all functions.

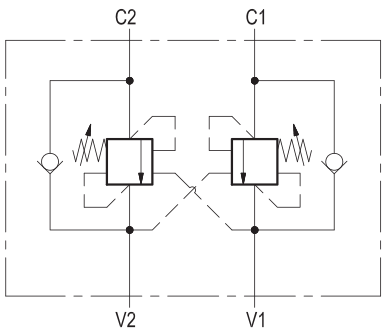

Characteristic curve

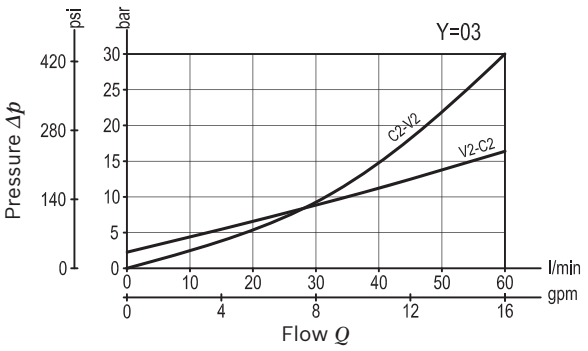

Ordering code

08.48.11	X	Y	Z

Dual counterbalance

Pilot ratio

03	4.2 : 1

Port sizes	V1 - V2	C1 - C2	
02	G 3/8	G 3/8	
03	G 1/2	G 1/2	

	SPRINGS		
	Adj. pressure range bar (psi)	Pres. increase bar/turn (psi/turn)	Std. setting Q=5 (l/min) bar (psi)
20	60-210 (870-3000)	63 (914)	200 (2900)
35	180-350 (2610-5000)	138 (2001)	350 (5000)

Pressure setting up to 410 bar: code on request.

Tamper resistant cap code
ordering code 11.04.23.002
Mat. no. R930000752

Preferred types

Type	Material number
084811030220000	R930006936
084811030235000	R930006445

Type	Material number
084811030320000	R930006817
084811030335000	R930006818

Dimensions

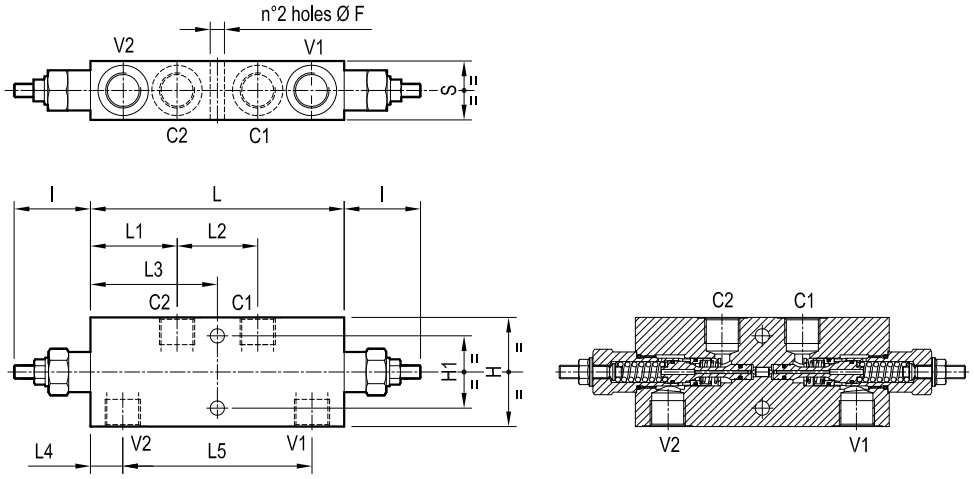

35 (1.38)	112.6 (4.43)	19.2 (0.76)	75.5 (2.97)	47.6 (1.87)	51.7 (2.04)	151 (5.95)	45.5 (1.79)	43 (1.69)	65 (2.56)		8.5 (0.34)				G 1/2	2.9 (6.4)
30 (1.18)	109.6 (4.32)	20.7 (0.82)	75.5 (2.97)	47.6 (1.87)	51.7 (2.04)	151 (5.95)	45.5 (1.79)	38 (1.5)	55 (2.17)		8.5 (0.34)				G 3/8	2.5 (5.5)
S	L5	L4	L3	L2	L1	L	l	H1	H		F				Y	Weight kg (lbs)

Dual counterbalance

A-VBSO-DE-30-FC1

08.44.30 - X - Y - Z

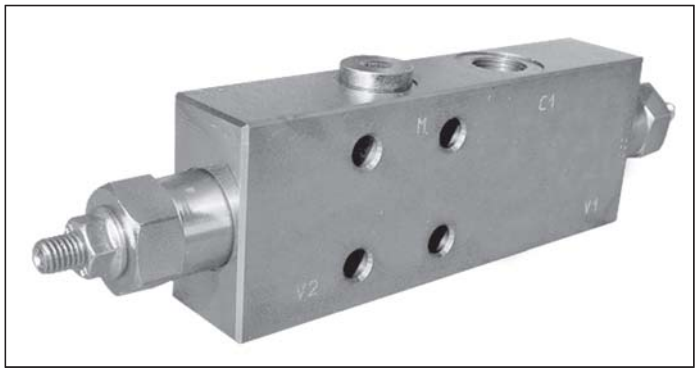

Technical data

Max. operating pressure	410 bar (5945 psi)
Max. flow	60 l/min. (16 gpm)
Weight	see “Dimensions”
Manifold material	Zinc plated steel
Flange seal kit [1)]	E00000000000056 (R930060579)
Fluid	Mineral oil (HL, HLP) according DIN 51524
Fluid temperature range	-30 °C to 100 (-22 to 212 °F)
Viscosity range	5 to 800 mm^2/s (cSt)
Recommended degree of fluid contamination	Class 19/17/14 according to ISO 4406
MTTFd	150 years see data sheet 18350-51
Other technical data	see data sheet 18350-50
Relief setting: at least 1.3 times the highest expected load.	

Note: for applications outside these parameters, please consult us.

[1)] Seals for 10 valves.

Description

It provides static and dynamic control of load by regulating the flow IN and OUT of the actuator, through ports C1 and C2. This valve module includes 2 sections, each one composed by a check and a relief valve pilot assisted by pressure in the opposite line: the check section allows free flow into the actuator, then holds the load against reverse movement; with pilot pressure applied at the line across, the pressure setting of the relief is reduced in proportion to the stated ratio until opening and allowing controlled reverse flow. Back-pressure at V1 or V2 is additive to the pressure setting in all functions. For better safety and compact assembly, the C2 port is gasket mounted directly on the actuator.

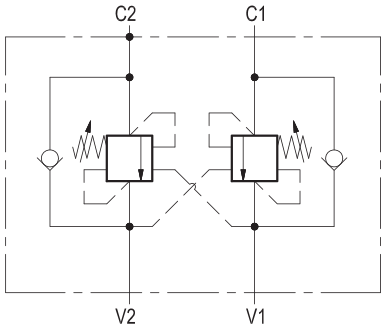

Characteristic curve

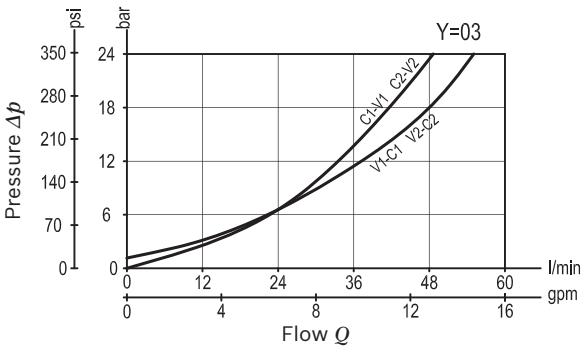

Ordering code

08.44.30	X	Y	Z

Dual counterbalance

Pilot ratio

03 4.2 : 1

	SPRINGS		
	Adj. pressure range bar (psi)	Pres. increase bar/turn (psi/turn)	Std. setting Q=5 (l/min) bar (psi)
20	60-210 (870-3000)	63 (914)	200 (2900)
35	180-350 (2610-5000)	138 (2001)	350 (5000)

Pressure setting up to 410 bar: code on request.

Port sizes	V1 - V2	C1 - C2	M
02	G 3/8	Ø 9 (0.35)	G 1/4
03	G 1/2	Ø 9 (0.35)	G 1/4

Tamper resistant cap code
ordering code 11.04.23.002
Mat. no. R930000752

Preferred types

Type	Material number
084430030220000	R930003428
08443003023500B	R930003429

Type	Material number
084430030320000	R930003431
08443003033500A	R930003432

Dimensions

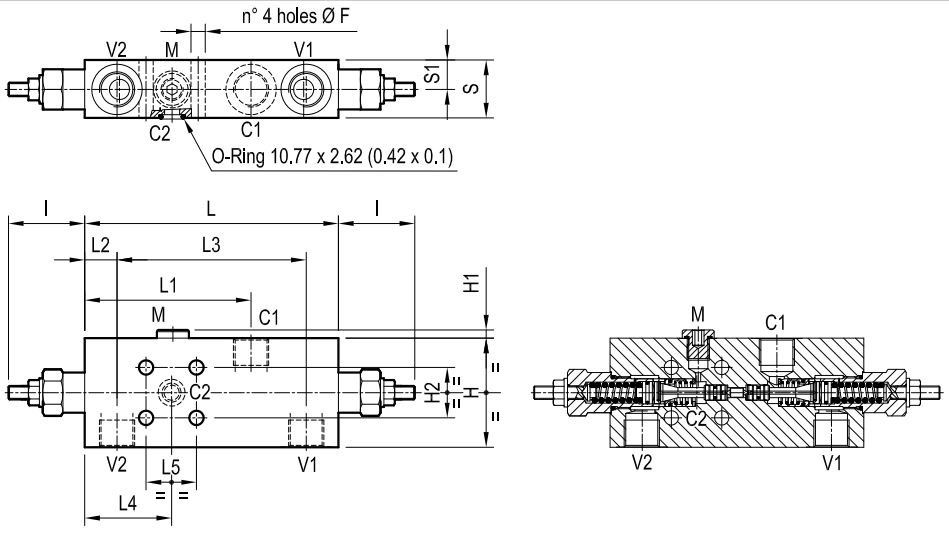

17.5 (0.69)	34.5 (1.36)	30 (1.18)	51.7 (2.04)	112.6 (4.43)	19.2 (0.76)	99.3 (3.91)	151 (5.95)	45.5 (1.79)	30 (1.18)	5 (0.2)	65 (2.56)	8.5 (0.34)			G 1/2	2.2 (4.9)
14.8 (0.58)	29.5 (1.16)	30 (1.18)	51.7 (2.04)	109.6 (4.32)	20.7 (0.82)	99.3 (3.91)	151 (5.95)	45.5 (1.79)	30 (1.18)	5 (0.2)	55 (2.17)	8.5 (0.34)			G 3/8	1.7 (3.8)
S1	S	L5	L4	L3	L2	L1	L	I	H2	H1	H	F			Y	Weight kg (lbs)

Dual counterbalance

A-VBSO-DE-30-FCB-PI

08.48.12 - X - Y - Z

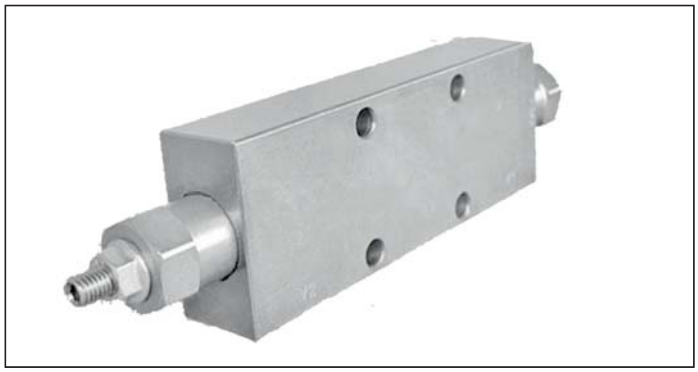

Description

It provides static and dynamic control of load by regulating the flow IN and OUT of the actuator, through ports C1 and C2. This valve module includes 2 sections, each one composed by a check and a relief valve pilot assisted by pressure in the opposite line: the check section allows free flow into the actuator, then holds the load against reverse movement; with pilot pressure applied at the line across, the pressure setting of the relief is reduced in proportion to the stated ratio until opening and allowing controlled reverse flow. Back-pressure at V1 or V2 is additive to the pressure setting in all functions. For better safety and compact assembly, the C1 and C2 ports are gasket mounted directly on the actuator.

Technical data

Max. operating pressure	410 bar (5945 psi)
Max. flow	60 l/min. (16 gpm)
Weight	see “Dimensions”
Manifold material	Zinc plated steel
Flange seal kit [1)]	E00000000000014 (R930005947)
Fluid	Mineral oil (HL, HLP) according DIN 51524
Fluid temperature range	-30 °C to 100 (-22 to 212 °F)
Viscosity range	5 to 800 mm^2/s (cSt)
Recommended degree of fluid contamination	Class 19/17/14 according to ISO 4406
MTTFd	150 years see data sheet 18350-51
Other technical data	see data sheet 18350-50
Relief setting: at least 1.3 times the highest expected load.	

Note: for applications outside these parameters, please consult us.

[1)] Seals for 10 valves.

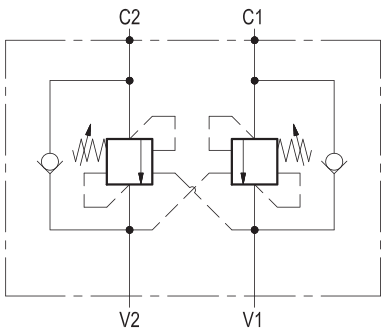

Characteristic curve

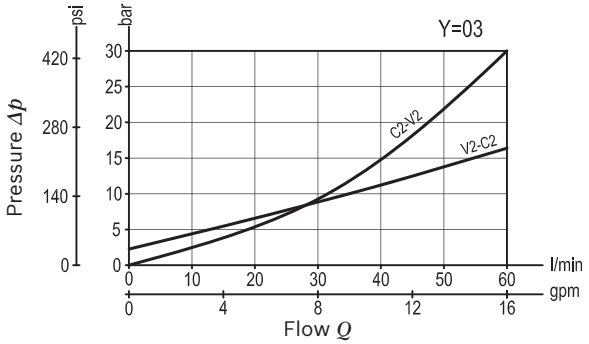

Ordering code

08.48.12	X	Y	Z

Dual counterbalance

Pilot ratio

03	4.2:1
85	11:1

Port sizes	V1 - V2	C1 - C2	
02	G 3/8	Ø 9 (0.35)	
03	G 1/2	Ø 9 (0.35)	

		SPRINGS		
		Adj. pressure range bar (psi)	Pres. increase bar/turn (psi/turn)	Std. setting Q=5 (l/min) bar (psi)
20	for X=03	60-210 (870-3000)	63 (914)	200 (2900)
	for X=85	60-250 (870-3600)	70 (1015)	200 (2900)
35	for X=03	180-350 (2610-5000)	138 (2001)	350 (5000)

Pressure setting up to 410 bar: code on request.

Tamper resistant cap code
ordering code 11.04.23.002
Mat. no. R930000752

Preferred types

Type	Material number
084812030220000	R930006792
084812030235000	R930006446
084812030320000	R930006793

Type	Material number
084812030335000	R930006447
084812850220000	R930006794
084812850320000	R930006795

Dimensions

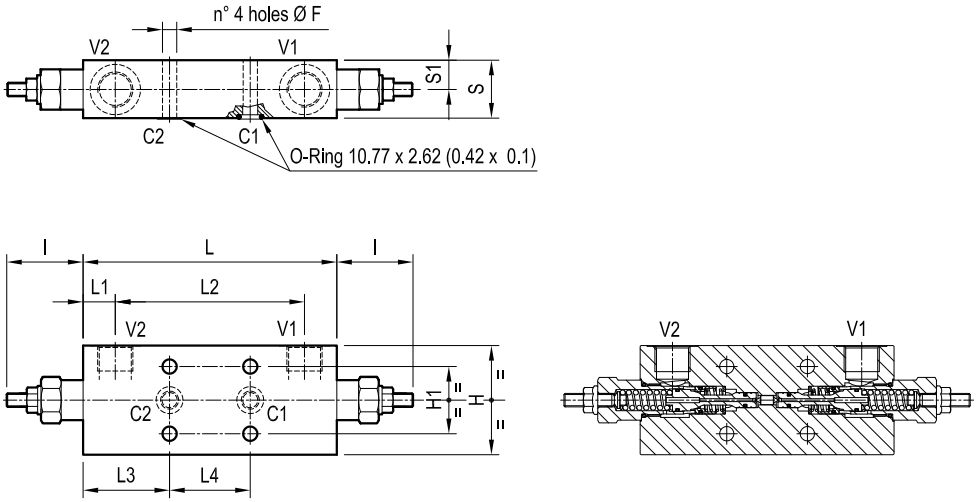

17.5 (0.69)	34.5 (1.36)	48 (1.89)	51.5 (2.03)	112.6 (4.43)	19.2 (0.76)	151 (5.95)	45.5 (1.79)	40 (1.58)	65 (2.56)		8.5 (0.34)				G 1/2	2.3 (5.1)
15 (0.59)	29.5 (1.16)	48 (1.89)	51.5 (2.03)	109.6 (4.32)	20.7 (0.82)	151 (5.95)	45.5 (1.79)	40 (1.58)	55 (2.17)		8.5 (0.34)				G 3/8	1.76 (3.88)
S1	S	L4	L3	L2	L1	L	l	H1	H		F				Y	Weight kg (lbs)

Dual counterbalance

A-VBSO-DE-SAF

08.44.60 - X - Y - Z

Description

It provides static and dynamic control of load by regulating the flow IN and OUT of the actuator, through ports C1 and C2. This valve module includes 2 sections, each one composed by a check and a relief valve pilot assisted by pressure in the opposite line: the check section allows free flow into the actuator, then holds the load against reverse movement; with pilot pressure applied at the line across, the pressure setting of the relief is reduced in proportion to the stated ratio until opening and allowing controlled reverse flow. Back-pressure at V1 or V2 is additive to the pressure setting in all functions.

Technical data

Max. operating pressure	410 bar (5945 psi)
Max. flow	80 l/min. (21 gpm)
Weight	2.3 kg (5.1 lbs)
Manifold material	Zinc plated steel
Fluid	Mineral oil (HL, HLP) according DIN 51524
Fluid temperature range	-30 °C to 100 (-22 to 212 °F)
Viscosity range	10 to 500 mm^2/s (cSt)
Recommended degree of fluid contamination	Class 19/17/14 according to ISO 4406
Other technical data	see data sheet 18350-50
Relief setting: at least 1.3 times the highest expected load.	

Note: for applications outside these parameters, please consult us.

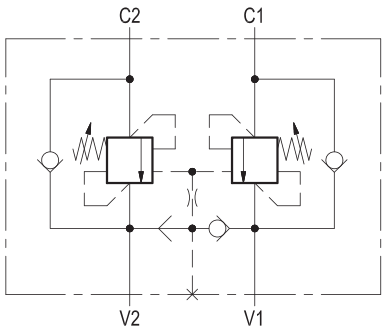

Characteristic curve

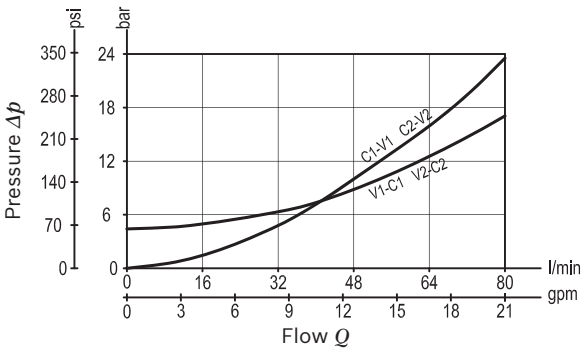

Dimensions [mm (inches)]

Ordering code

08.44.60	X	Y	Z

Dual counterbalance

Pilot ratio

03	4.2 : 1

Port sizes	V1 - V2	C1 - C2	
03	G 1/2	G 1/2	

	SPRINGS		
	Adj. pressure range bar (psi)	Pres. increase bar/turn (psi/turn)	Std. setting Q=5 (l/min) bar (psi)
35	100-350 (1450-5000)	147 (2132)	350 (5000)

Pressure setting up to 410 bar: code on request.

Preferred types

Type	Material number
084460030335000	R930003440

Type	Material number

Dimensions

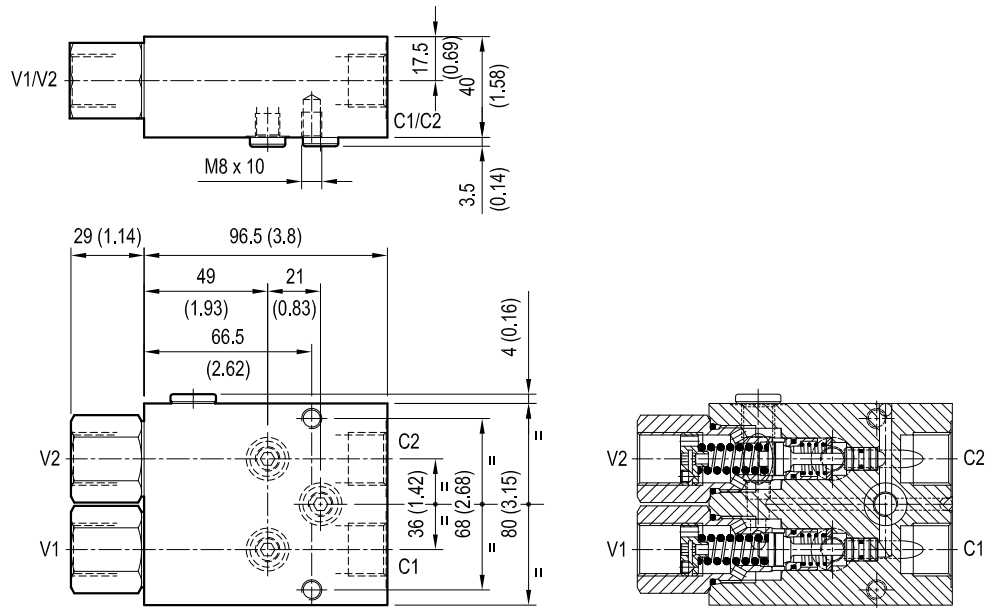

Dual counterbalance

A-VBSO-DE-90-FC2

08.44.89 - X - Y - Z

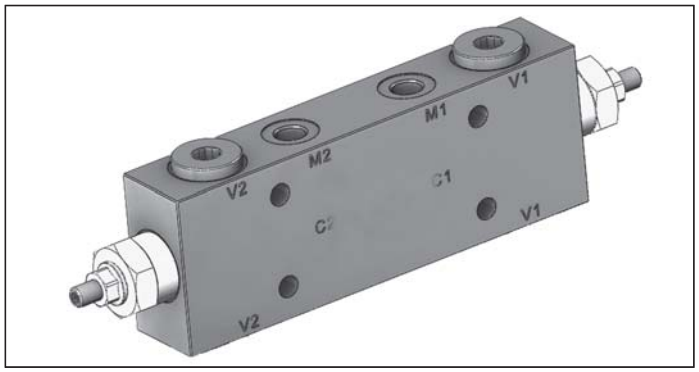

Technical data

Max. operating pressure	410 bar (5945 psi)
Max. flow	90 l/min. (24 gpm)
Weight	3 kg (6.6 lbs)
Manifold material	Zinc plated steel
Flange seal kit [1]	E00000000000009 (R930004539)
Fluid	Mineral oil (HL, HLP) according DIN 51524
Fluid temperature range	-30 °C to 100 (-22 to 212 °F)
Viscosity range	5 to 800 mm^2/s (cSt)
Recommended degree of fluid contamination	Class 19/17/14 according to ISO 4406
Other technical data	see data sheet 18350-50
Relief setting: at least 1.3 times the highest expected load.	

Note: for applications outside these parameters, please consult us.

[1] Seals for 10 valves.

Description

It provides static and dynamic control of load by regulating the flow IN and OUT of the actuator, through ports C1 and C2. This valve module includes 2 sections, each one composed by a check and a relief valve pilot assisted by pressure in the opposite line: the check section allows free flow into the actuator, then holds the load against reverse movement; with pilot pressure applied at the line across, the pressure setting of the relief is reduced in proportion to the stated ratio until opening and allowing controlled reverse flow. Back-pressure at V1 or V2 is additive to the pressure setting in all functions. For better safety and compact assembly, the C1 and C2 ports are gasket mounted directly on the actuator.

Note: port identified with M are not protected with calibrated orifice but in direct connection with pressure channels.

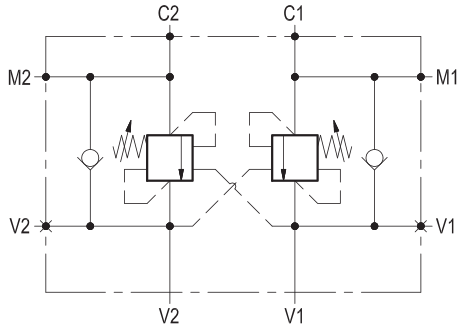

Characteristic curve

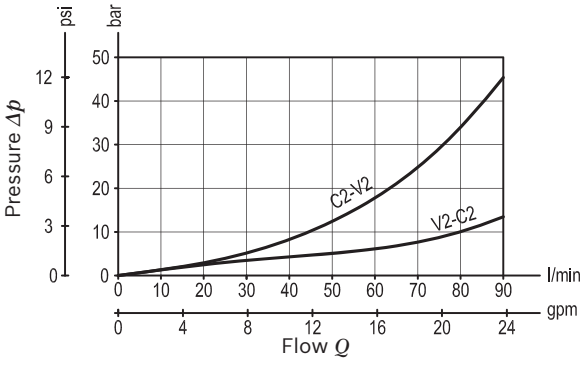

RE 18300-63/03.2013 Bosch Rexroth AG Control Valves

Dimensions [mm (inches)]

Ordering code

08.44.89	X	Y	Z

Dual counterbalance

Pilot ratio

03	4.2 : 1

Port sizes	V1 - V2	C1 - C2	M1 - M2
03	G 1/2	Ø 9 (0.35)	G 1/4

	SPRINGS		
	Adj. pressure range bar (psi)	Pres. increase bar/turn (psi/turn)	Std. setting Q=5 (l/min) bar (psi)
35	100-350 (1450-5000)	138 (2001)	350 (5000)

Pressure setting up to 410 bar: code on request.

Preferred types

Type	Material number
084489030335000	R930003459

Type	Material number

Dimensions

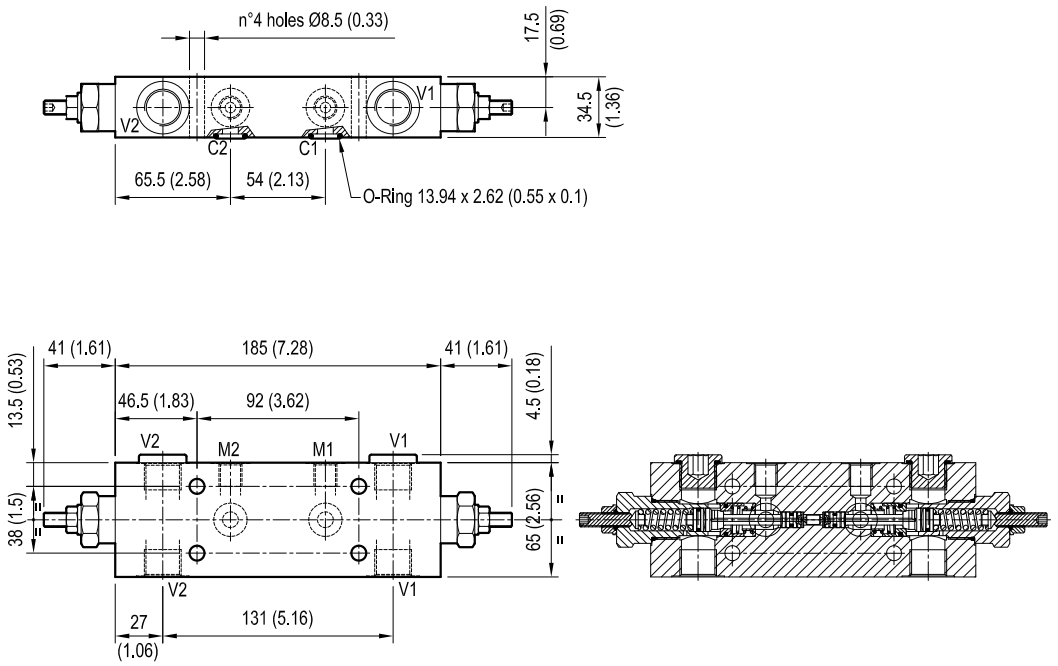

Dual counterbalance

VBSO-DE

05.42.01 - X - Y - Z

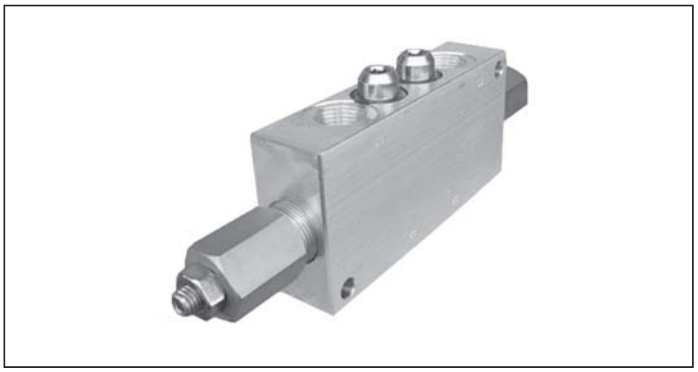

Description

It provides static and dynamic control of load by regulating the flow IN and OUT of the actuator, through ports C1 and C2. This valve module includes 2 sections, each one composed by a check and a relief valve pilot assisted by pressure in the opposite line: the check section allows free flow into the actuator, then holds the load against reverse movement; with pilot pressure applied at the line across, the pressure setting of the relief is reduced in proportion to the stated ratio until opening and allowing controlled reverse flow. Back-pressure at V1 or V2 is additive to the pressure setting in all functions.

Technical data

Operating pressure	up to 210 bar (3000 psi)
Max. flow	see performance graph
Weight	1.4 kg (3.1 lbs)
Manifold material	Aluminium
Note: aluminium bodies are often strong enough for operating pressures exceeding 210 bar (3000 psi), depending from the fatigue life expected in the specific application. If in doubt, consult our Service Network.	
Fluid	Mineral oil (HL, HLP) according DIN 51524
Fluid temperature range	-30 °C to 100 (-22 to 212 °F)
Viscosity range	5 to 800 mm^2/s (cSt)
Recommended degree of fluid contamination	Class 19/17/14 according to ISO 4406
Other technical data	see data sheet 18350-50
Relief setting: at least 1.3 times the highest expected load.	

Note: for applications outside these parameters, please consult us.

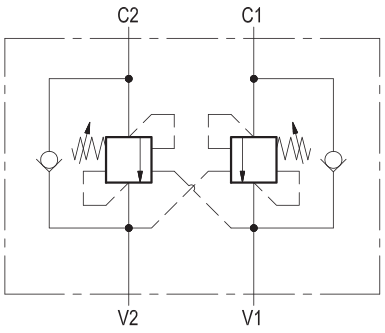

Characteristic curve

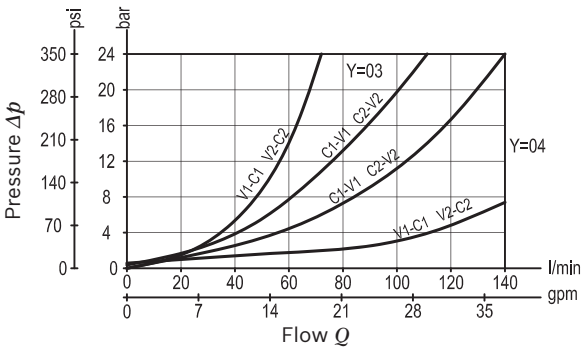

Dimensions [mm (inches)]

Ordering code

05.42.01	X	Y	Z

Dual counterbalance

Pilot ratio

03	8.2 : 1
10	3.2 : 1

Port sizes	V1 - V2	C1 - C2	
03	G 1/2	G 1/2	
04	G 3/4	G 3/4	

	SPRINGS		
	Adj. pressure range bar (psi)	Pres. increase bar/turn (psi/turn)	Std. setting Q=5 (l/min) bar (psi)
20	60-210 (900-3000)	64 (928)	200 (2900)
35	120-350 (1750-5000)	106 (1537)	350 (5000)

Tamper resistant cap code
ordering code 11.04.23.003
Mat. no. R930000754

Preferred types

Type	Material number
054201030320000	R930001758
05420103033500A	R930001761
054201030420000	R930001771
05420103043500A	R930001773

Type	Material number
054201100320000	R930005704
05420110033500A	R930001776
054201100420000	R930000981
05420110043500A	R930001781

Dimensions

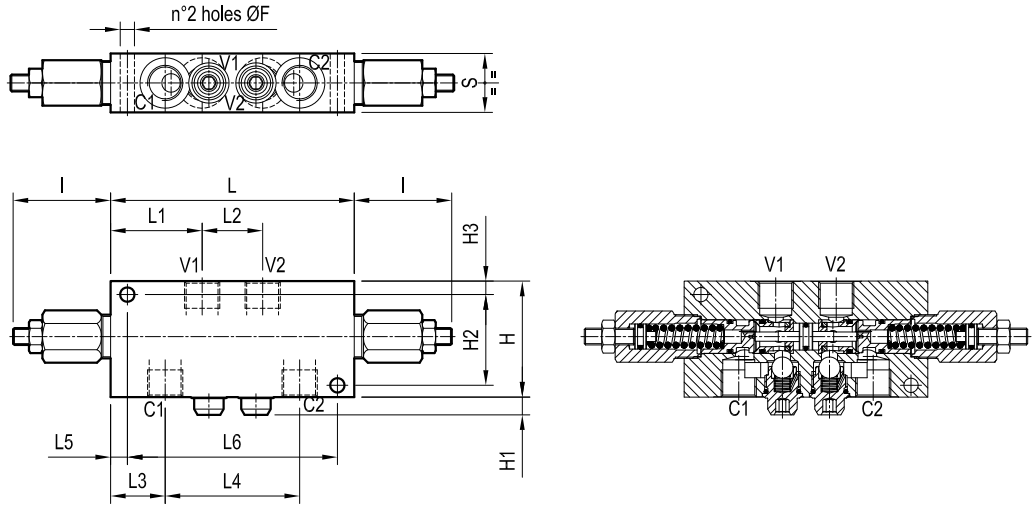

40 (1.58)	155 (6.1)	10 (0.39)	107 (4.21)	34 (1.34)	50 (1.97)	62.5 (2.46)	175 (6.89)	58 (2.28)	10 (0.39)	70 (2.76)	11 (0.43)	90 (3.54)	10.5 (0.41)		G 3/4	
35 (1.38)	125 (4.92)	10 (0.39)	80 (3.15)	32.5 (1.28)	36 (1.42)	54.5 (2.15)	145 (5.71)	58 (2.28)	8 (0.32)	54 (2.13)	11 (0.43)	70 (2.76)	8.5 (0.34)		G 1/2	1.40 (3.1)
S	L6	L5	L4	L3	L2	L1	L	l	H3	H2	H1	H	F		Y	Weight kg (lbs)

Dual counterbalance

VBSO-DE-FC2 05.42.06 - X - Y - Z

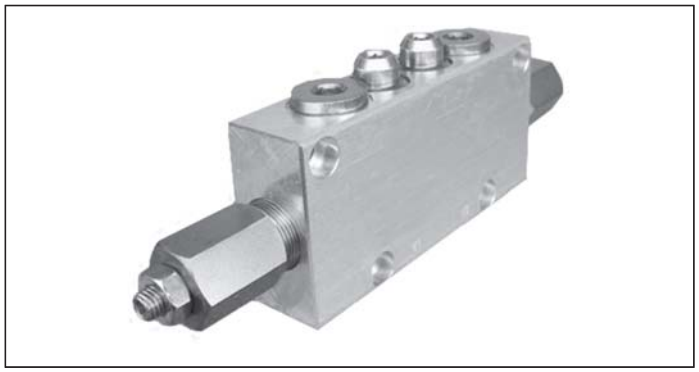

Description

It provides static and dynamic control of load by regulating the flow IN and OUT of the actuator, through ports C1 and C2. This valve module includes 2 sections, each one composed by a check and a relief valve pilot assisted by pressure in the opposite line: the check section allows free flow into the actuator, then holds the load against reverse movement; with pilot pressure applied at the line across, the pressure setting of the relief is reduced in proportion to the stated ratio until opening and allowing controlled reverse flow. Back-pressure at V1 or V2 is additive to the pressure setting in all functions. For better safety and compact assembly, the C1 and C2 ports are gasket mounted directly on the actuator.

Technical data

Operating pressure	up to 210 bar (3000 psi)
Max. flow	see performance graph
Weight	see “Dimensions”
Manifold material	Aluminium
Note: aluminium bodies are often strong enough for operating pressures exceeding 210 bar (3000 psi), depending from the fatigue life expected in the specific application. If in doubt, consult our Service Network.	
Flange seal kit (03) [1]	E00000000000008 (R930004538)
Flange seal kit (04) [2]	E00000000000020 (R930000144)
Fluid	Mineral oil (HL, HLP) according DIN 51524
Fluid temperature range	-30 °C to 100 (-22 to 212 °F)
Viscosity range	5 to 800 mm^2/s (cSt)
Recommended degree of fluid contamination	Class 19/17/14 according to ISO 4406
Other technical data	see data sheet 18350-50
Relief setting: at least 1.3 times the highest expected load.	

Note: for applications outside these parameters, please consult us.

[1] Seals for 10 valves
[2] Seals for 5 valves

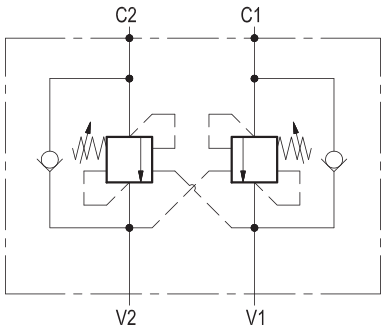

Characteristic curve

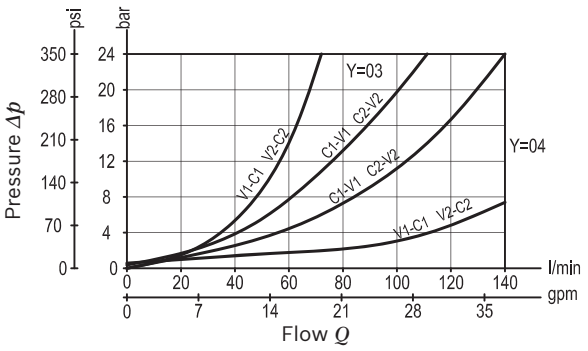

Dimensions [mm (inches)]

Ordering code

05.42.06	X	Y	Z

Dual counterbalance

Pilot ratio

03	8.2 : 1
10	3.2 : 1

Port sizes	V1 - V2	C1 - C2	
03	G 1/2	Ø 10 (0.39)	
04	G 3/4	Ø 14 (0.55)	

	SPRINGS		
	Adj. pressure range bar (psi)	Pres. increase bar/turn (psi/turn)	Std. setting Q=5 (l/min) bar (psi)
35	120-350 (1750-5000)	106 (1537)	350 (5000)

Preferred types

Type	Material number
05420603033500A	R930001803
05420603043500A	R930001805

Type	Material number
05420610033500A	R930001806
054206100435000	R930001807

Dimensions

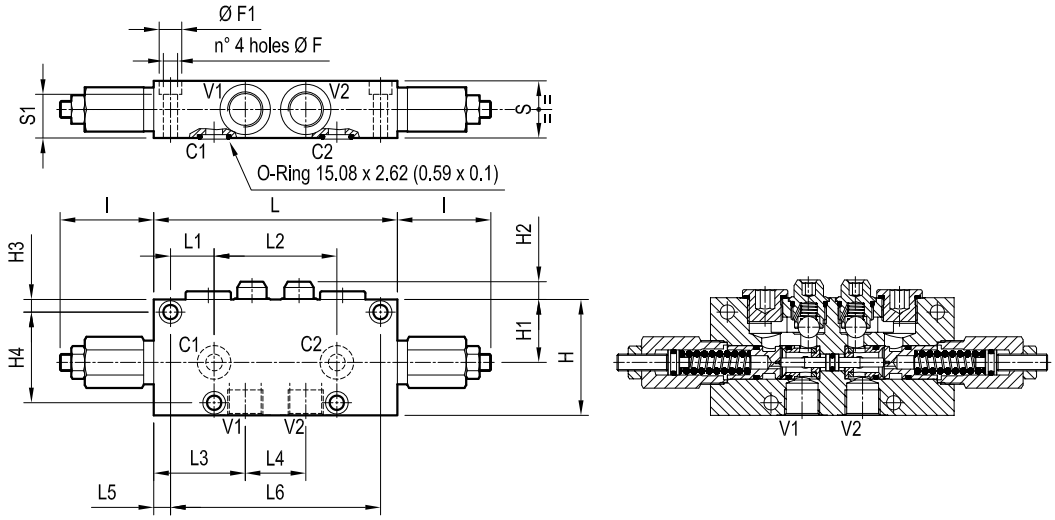

39 (1.54)	29 (1.14)	155 (6.1)	10 (0.39)	50 (1.97)	62.5 (2.46)	100 (3.94)	27.5 (1.08)	175 (6.89)	56 (2.21)	70 (2.76)	10 (0.39)	11 (0.43)	52 (2.05)	90 (3.54)	10.5 (0.41)	16.5 (0.65)	G 3/4	2.2 (4.9)
34 (1.34)	26 (1.02)	125 (4.92)	10 (0.39)	36 (1.42)	54.5 (2.15)	73 (2.87)	26 (1.02)	145 (5.71)	56 (2.21)	54 (2.13)	7.5 (0.3)	11 (0.43)	37.5 (1.48)	69 (2.72)	8.5 (0.34)	13.5 (0.53)	G 1/2	1.4 (3.09)
S	S1	L6	L5	L4	L3	L2	L1	L	I	H4	H3	H2	H1	H	F	F1	Y	Weight kg (lbs)

Dual counterbalance

VBSO-DE-33

05.44.32 - X - Y - Z

Description

It provides static and dynamic control of load by regulating the flow IN and OUT of the actuator, through ports C1 and C2. This valve module includes 2 sections, each one composed by a check and a relief valve pilot assisted by pressure in the opposite line: the check section allows free flow into the actuator, then holds the load against reverse movement; with pilot pressure applied at the line across, the pressure setting of the relief is reduced in proportion to the stated ratio until opening and allowing controlled reverse flow. Back-pressure at V1 or V2 is additive to the pressure setting in all functions.

Technical data

Operating pressure	up to 210 bar (3000 psi)
Max. flow	150 l/min. (40 gpm)
Weight	see “Dimensions”
Manifold material	Anodized aluminium
Note: aluminium bodies are often strong enough for operating pressures exceeding 210 bar (3000 psi), depending from the fatigue life expected in the specific application. If in doubt, consult our Service Network.	
Fluid	Mineral oil (HL, HLP) according DIN 51524
Fluid temperature range	-30 °C to 100 (-22 to 212 °F)
Viscosity range	5 to 800 mm^2/s (cSt)
Recommended degree of fluid contamination	Class 19/17/14 according to ISO 4406
Other technical data	see data sheet 18350-50
Relief setting: at least 1.3 times the highest expected load.	

Note: for applications outside these parameters, please consult us.

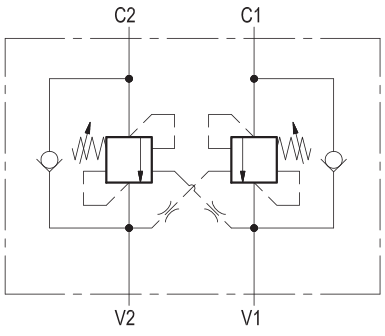

Characteristic curve

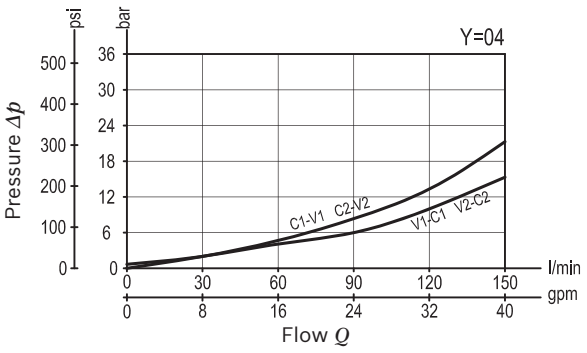

RE 18350-65/03.2013 Bosch Rexroth AG Control Valves

Dimensions [mm (inches)]

Ordering code

05.44.32	X	Y	Z

Dual counterbalance

Pilot ratio

03	4 : 1

Port sizes	V1 - V2	C1 - C2	
03	G 1/2	G 1/2	
04	G 3/4	G 3/4	

	SPRINGS		
	Adj. pressure range bar (psi)	Pres. increase bar/turn (psi/turn)	Std. setting Q=5 (l/min) bar (psi)
35	150-350 (2175-5000)	110 (1595)	350 (5000)

Tamper resistant cap code
ordering code 11.04.30.001
Mat. no. R930005194

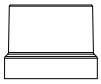

Preferred types

Type	Material number
05443203033500D	R930007139
05443203043500D	R930007137

Type	Material number

Dimensions

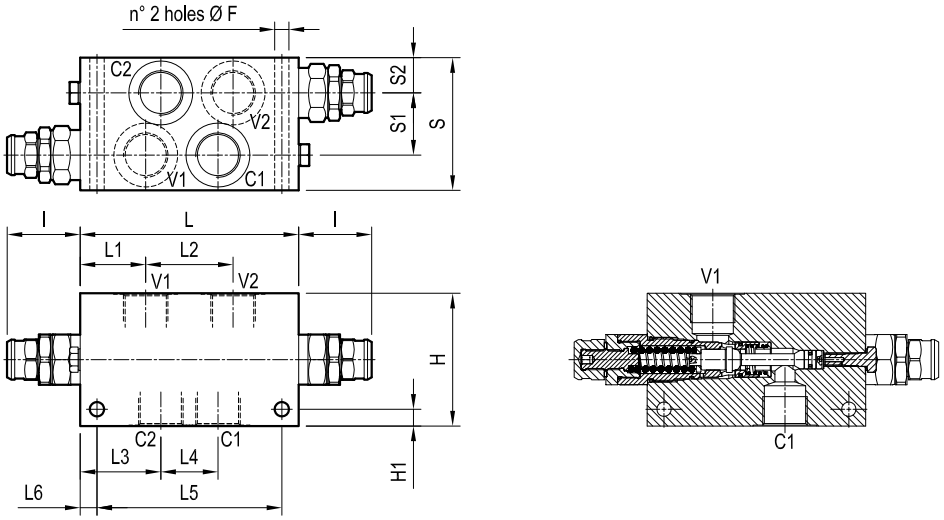

21 (0.83)	37 (1.46)	79 (3.11)	10 (0.39)	110 (4.33)	34 (1.34)	48 (1.89)	52 (2.05)	39 (1.54)	130 (5.12)	43.5 (1.72)	10 (0.39)	79 (3.11)	8.5 (0.34)		G 3/4	3.2 (7.1)
20.5 (0.81)	29 (1.14)	70 (2.76)	10.5 (0.41)	110 (4.33)	34 (1.34)	48.5 (1.91)	52 (2.05)	39.5 (1.56)	131 (5.16)	43.5 (1.72)	10.5 (0.41)	70 (2.76)	8.5 (0.34)		G 1/2	1.8 (3.97)
S2	S1	S	L6	L5	L4	L3	L2	L1	L	l	H1	H	F		Y	Weight kg (lbs)

Dual counterbalance

VBSO-DE-33

05.44.32.13 - Y - Z

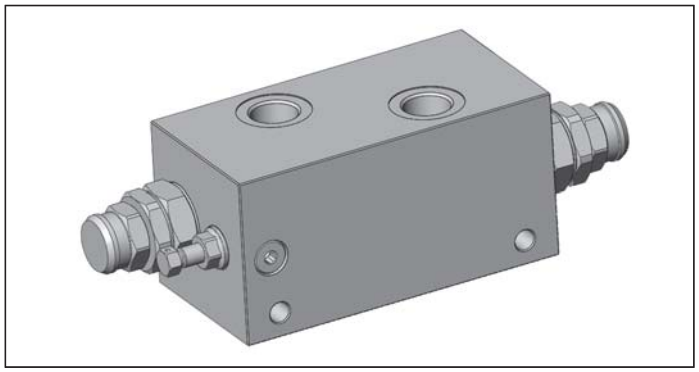

Description

It provides static and dynamic control of load by regulating the flow IN and OUT of the actuator, through ports C1 and C2. This valve module includes 2 sections, each one composed by a check and a relief valve pilot assisted by pressure in the opposite line: the check section allows free flow into the actuator, then holds the load against reverse movement; with pilot pressure applied at the line across, the pressure setting of the relief is reduced in proportion to the stated ratio until opening and allowing controlled reverse flow. Back-pressure at V1 or V2 is additive to the pressure setting in all functions.

Technical data

Operating pressure	up to 210 bar (3000 psi)
Max. flow	150 l/min. (40 gpm)
Weight	see “Dimensions”
Manifold material	Anodized aluminium
Note: aluminium bodies are often strong enough for operating pressures exceeding 210 bar (3000 psi), depending from the fatigue life expected in the specific application. If in doubt, consult our Service Network.	
Fluid	Mineral oil (HL, HLP) according DIN 51524
Fluid temperature range	-30 °C to 100 (-22 to 212 °F)
Viscosity range	5 to 800 mm^2/s (cSt)
Recommended degree of fluid contamination	Class 19/17/14 according to ISO 4406
Other technical data	see data sheet 18350-50
Relief setting: at least 1.3 times the highest expected load.	

Note: for applications outside these parameters, please consult us.

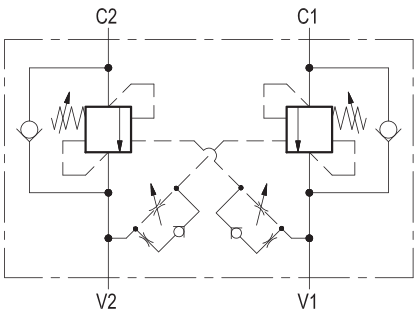

Characteristic curve

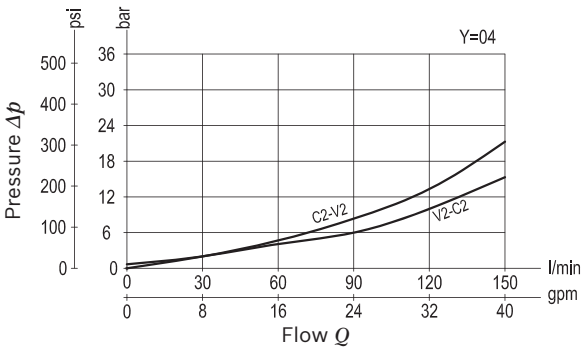

Dimensions [mm (inches)]

Ordering code

05.44.32	13	Y	Z

Dual counterbalance

Pilot ratio

13	4 : 1

Port sizes	V1 - V2	C1 - C2	
03	G 1/2	G 1/2	
04	G 3/4	G 3/4	

	SPRINGS		
	Adj. pressure range bar (psi)	Pres. increase bar/turn (psi/turn)	Std. setting Q=5 (l/min) bar (psi)
35	150-350 (2175-5000)	110 (1595)	350 (5000)

Tamper resistant cap code
ordering code 11.04.30.001
Mat. no. R930005194

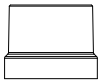

Preferred types

Type	Material number
05443213033500A	R930007243
05443213043500A	R930007246

Type	Material number

Dimensions

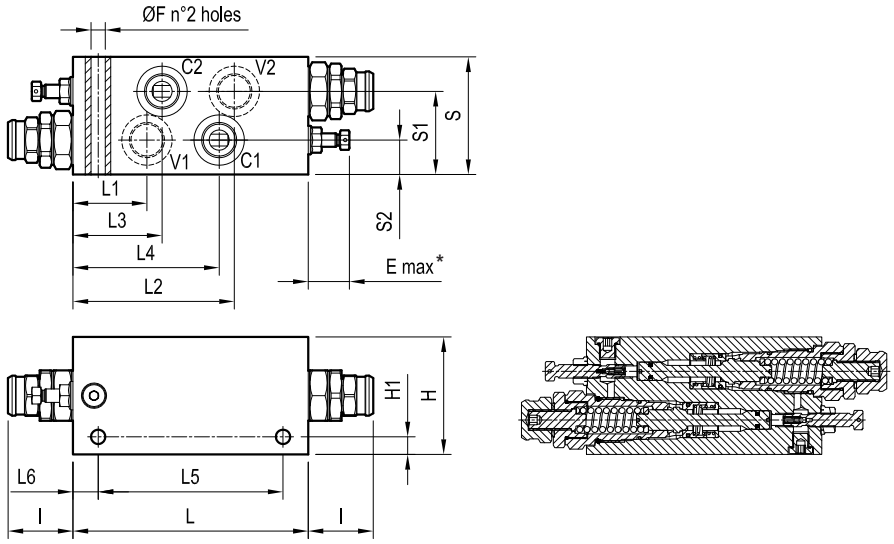

20.5 (0.81)	49.5 (1.95)	70 (2.76)	15 (0.59)	110 (4.33)	87 (3.43)	53 (2.09)	96 (3.78)	44 (1.73)	140 (5.51)	38.7 (1.52)	10.5 (0.41)	70 (2.76)	8.5 (0.34)	25 (0.98)	G 3/4	2.3 (5.1)
20.5 (0.81)	49.5 (1.95)	70 (2.76)	15 (0.59)	110 (4.33)	87 (3.43)	53 (2.09)	96 (3.78)	44 (1.73)	140 (5.51)	38.7 (1.52)	10.5 (0.41)	70 (2.76)	8.5 (0.34)	25 (0.98)	G 1/2	2.32 (5.11)
S2	S1	S	L6	L5	L4	L3	L2	L1	L	l	H1	H	F	E	Y	Weight kg (lbs)

* The adjusting screw can be completely unscrewed. Do not exceed the indicated protrusion range of the adjusted screw.

Dual counterbalance

VBSO-DE-33-FC2

05.44.33 - X - Y - Z

Technical data

Operating pressure	up to 210 bar (3000 psi)
Max. flow	150 l/min. (40 gpm)
Weight	2.8 kg (6.2 lbs)
Manifold material	Anodized aluminium
Note: aluminium bodies are often strong enough for operating pressures exceeding 210 bar (3000 psi), depending from the fatigue life expected in the specific application. If in doubt, consult our Service Network.	
Flange seal kit [1]	E00000000000012 (R930005945)
Fluid	Mineral oil (HL, HLP) according DIN 51524
Fluid temperature range	-30 °C to 100 (-22 to 212 °F)
Viscosity range	5 to 800 mm^2/s (cSt)
Recommended degree of fluid contamination	Class 19/17/14 according to ISO 4406
Other technical data	see data sheet 18350-50
Relief setting: at least 1.3 times the highest expected load.	

Note: for applications outside these parameters, please consult us.

[1] Seals for 5 valves.

Description

It provides static and dynamic control of load by regulating the flow IN and OUT of the actuator, through ports C1 and C2. This valve module includes 2 sections, each one composed by a check and a relief valve pilot assisted by pressure in the opposite line: the check section allows free flow into the actuator, then holds the load against reverse movement; with pilot pressure applied at the line across, the pressure setting of the relief is reduced in proportion to the stated ratio until opening and allowing controlled reverse flow. Back-pressure at V1 or V2 is additive to the pressure setting in all functions. For better safety and compact assembly, the C1 and C2 ports are gasket mounted directly on the actuator.

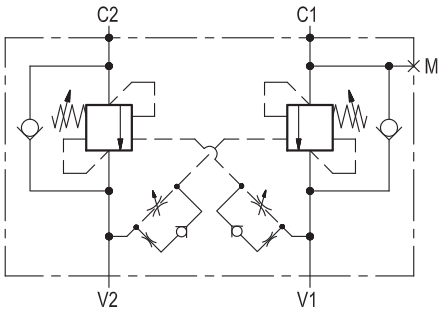

Characteristic curve

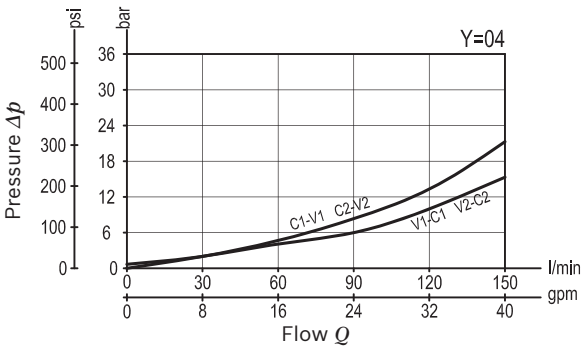

Dimensions [mm (inches)]

Ordering code

05.44.33	X	Y	Z

Dual counterbalance

Pilot ratio

13	4 : 1

Port sizes	V1 - V2	C1 - C2	
03	G 1/2	Ø 13 (0.51)	
04	G 3/4	Ø 13 (0.51)	

	SPRINGS		
	Adj. pressure range bar (psi)	Pres. increase bar/turn (psi/turn)	Std. setting Q=5 (l/min) bar (psi)
35	150-350 (2175-5000)	110 (1595)	350 (5000)

Tamper resistant cap code
ordering code 11.04.30.001
Mat. no. R930005194

Preferred types

Type	Material number
05443313033500D	R930007464
05443313043500D	R930007140

Type	Material number

Dimensions

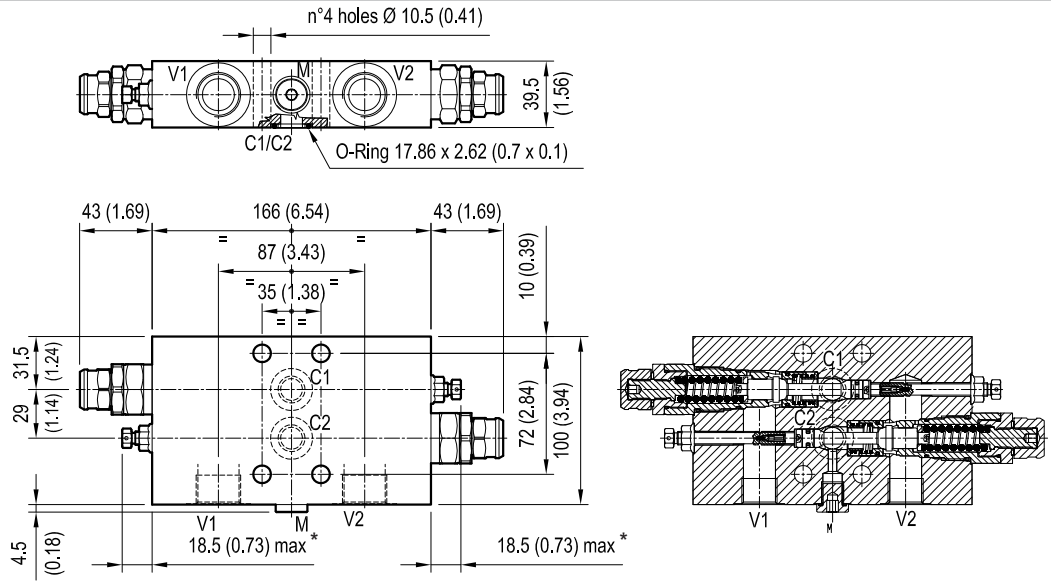

* The adjusting screw can be completely unscrewed. Do not exceed the indicated protrusion range of the adjusted screw.

Dual counterbalance

A-VBSO-DE-33-FC2

08.44.33 - X - Y - Z

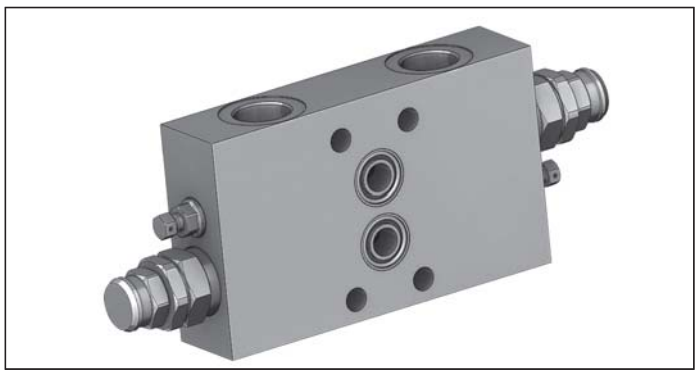

Description

It provides static and dynamic control of load by regulating the flow IN and OUT of the actuator, through ports C1 and C2. This valve module includes 2 sections, each one composed by a check and a relief valve pilot assisted by pressure in the opposite line: the check section allows free flow into the actuator, then holds the load against reverse movement; with pilot pressure applied at the line across, the pressure setting of the relief is reduced in proportion to the stated ratio until opening and allowing controlled reverse flow. Back-pressure at V1 or V2 is additive to the pressure setting in all functions. For better safety and compact assembly, the C1 and C2 ports are gasket mounted directly on the actuator.

Technical data

Max. operating pressure	410 bar (5945 psi)
Max. flow	150 l/min. (40 gpm)
Weight	5.3 kg (11.7 lbs)
Manifold material	Zinc plated steel
Flange seal kit [1)]	E00000000000012 (R930005945)
Fluid	Mineral oil (HL, HLP) according DIN 51524
Fluid temperature range	-30 °C to 100 (-22 to 212 °F)
Viscosity range	5 to 800 mm^2/s (cSt)
Recommended degree of fluid contamination	Class 19/17/14 according to ISO 4406
Other technical data	see data sheet 18350-50
Relief setting: at least 1.3 times the highest expected load.	

Note: for applications outside these parameters, please consult us.

[1)] Seals for 5 valves.

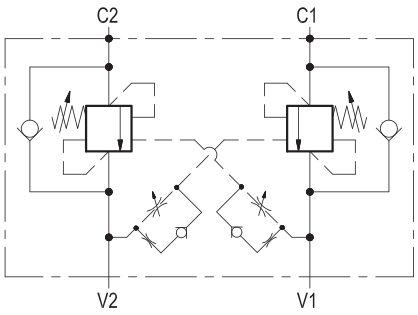

Characteristic curve

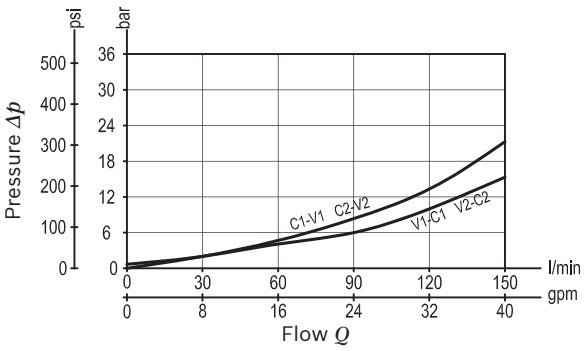

Ordering code

08.44.33	X	Y	Z

Dual counterbalance

Pilot ratio

13	4 : 1

Port sizes	V1 - V2	C1 - C2	
04	G 3/4	Ø 12.5 (0.49)	

	SPRINGS		
	Adj. pressure range bar (psi)	Pres. increase bar/turn (psi/turn)	Std. setting Q=5 (l/min) bar (psi)
35	150-350 (2175-5000)	110 (1595)	350 (5000)

Pressure setting up to 410 bar: code on request.

Tamper resistant cap code
ordering code 11.04.30.001
Mat. no. R930005194

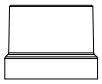

Preferred types

Type	Material number
084433130435000	R930058457

Type	Material number

Dimensions

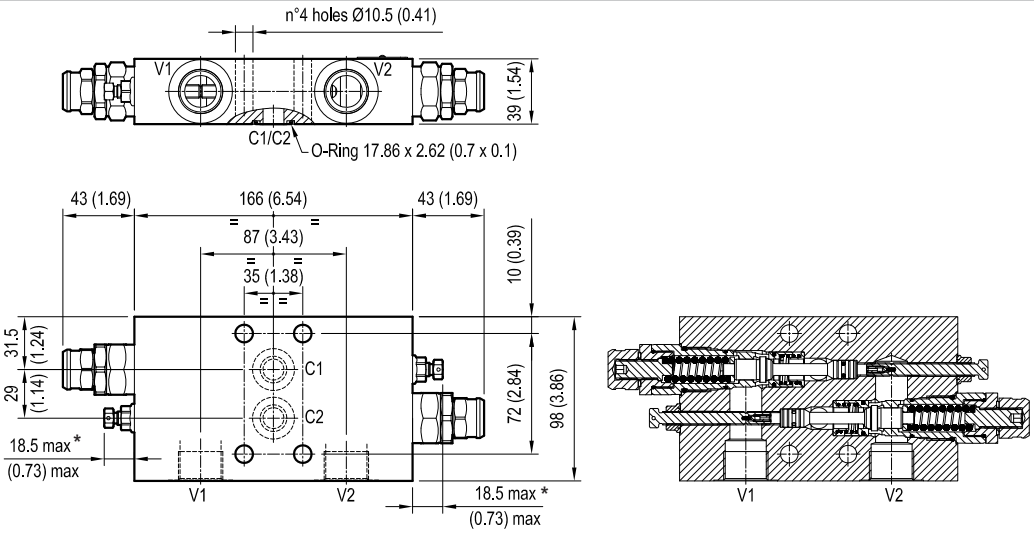

* The adjusting screw can be completely unscrewed. Do not exceed the indicated protrusion range of the adjusted screw.

Dual counterbalance, relief compensated

A-VBSO-DE-CC-30

08.44.04 - X - Y - Z

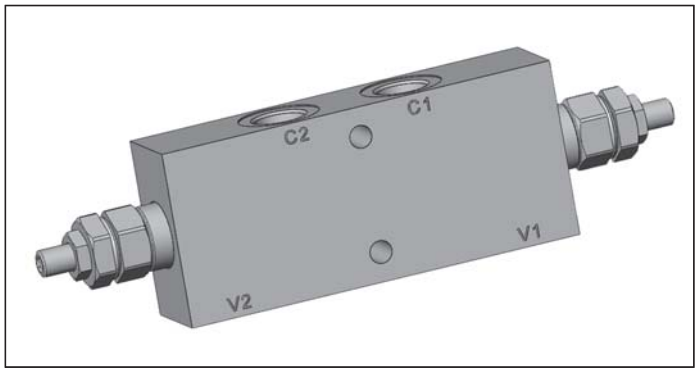

Technical data

Max. operating pressure	410 bar (5945 psi)
Max. flow	60 l/min. (16 gpm)
Weight	see “Dimensions”
Manifold material	Zinc plated steel
Fluid	Mineral oil (HL, HLP) according DIN 51524
Fluid temperature range	-30 °C to 100 (-22 to 212 °F)
Viscosity range	5 to 800 mm^2/s (cSt)
Recommended degree of fluid contamination	Class 19/17/14 according to ISO 4406
MTTFd	150 years see data sheet 18350-51
Other technical data	see data sheet 18350-50
Relief setting: at least 1.3 times the highest expected load.	

Note: for applications outside these parameters, please consult us.

Description

It provides static and dynamic control of load by regulating the flow IN and OUT of the actuator, through ports C1 and C2. This valve module includes 2 sections, each one composed by a check and a relief valve with balanced piston, pilot assisted by pressure in the opposite line: the check section allows free flow into the actuator, then holds the load against reverse movement; with pilot pressure applied at the line across, the pressure setting of the relief is reduced in proportion to the stated ratio until opening and allowing controlled reverse flow. Relief operates at the valve setting independent of back-pressure, but the piloted opening remains subject to additive pressure at V1 or V2.

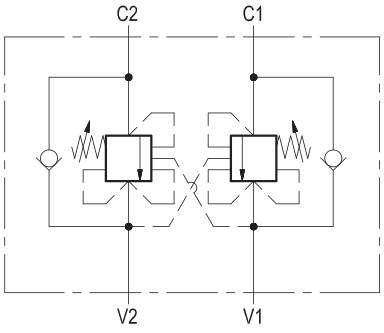

Characteristic curve

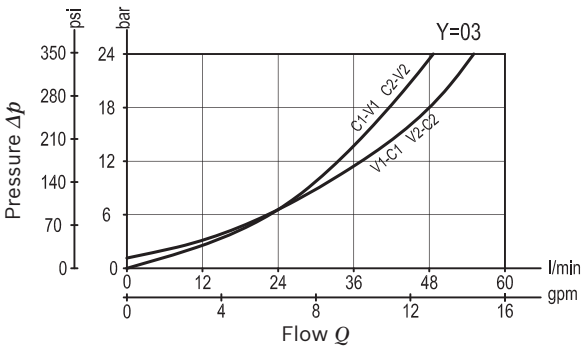

Dimensions [mm (inches)]

Ordering code

08.44.04	X	Y	Z

Dual counterbalance

Pilot ratio

03	4.2 : 1

Port sizes	V1 - V2	C1 - C2	
02	G 3/8	G 3/8	
03	G 1/2	G 1/2	

	SPRINGS		
	Adj. pressure range bar (psi)	Pres. increase bar/turn (psi/turn)	Std. setting Q=5 (l/min) bar (psi)
20	60-210 (870-3000)	75 (1088)	200 (2900)
35	100-350 (1450-5000)	165 (2393)	350 (5000)

Pressure setting up to 410 bar: code on request.

Tamper resistant cap code
ordering code 11.04.23.003
Mat. no. R930000754

Preferred types

Type	Material number
084404030220000	R930003349
084404030235000	R930003352

Type	Material number
084404030320000	R930003355
08440403033500A	R930006979

Dimensions

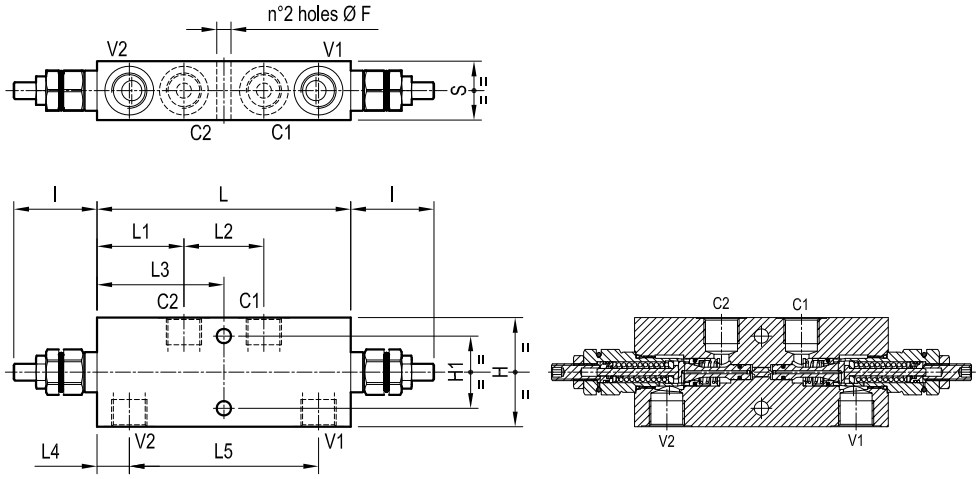

35 (1.38)	112.6 (4.43)	19.2 (0.76)	75.5 (2.97)	47.6 (1.87)	51.7 (2.04)	151 (5.95)	49.5 (1.95)	43 (1.69)	65 (2.56)		8.5 (0.34)				G 1/2	2.6 (5.7)
30 (1.18)	109.6 (4.32)	20.7 (0.82)	75.5 (2.97)	47.6 (1.87)	51.7 (2.04)	151 (5.95)	49.5 (1.95)	38 (1.5)	55 (2.17)		8.5 (0.34)				G 3/8	2.0 (4.4)
S	L5	L4	L3	L2	L1	L	l	H1	H		F				Y	Weight kg (lbs)

Dual counterbalance relief compensated

VBSO-DE-CC

05.42.05 - X - Y - Z

Description

It provides static and dynamic control of load by regulating the flow IN and OUT of the actuator, through ports C1 and C2. This valve module includes 2 sections, each one composed by a check and a relief valve with balanced piston, pilot assisted by pressure in the opposite line: the check section allows free flow into the actuator, then holds the load against reverse movement; with pilot pressure applied at the line across, the pressure setting of the relief is reduced in proportion to the stated ratio until opening and allowing controlled reverse flow. Relief operates at the valve setting independent of back-pressure, but the piloted opening remains subject to additive pressure at V1 or V2.

Technical data

Operating pressure	up to 210 bar (3000 psi)
Max. flow	see performance graph
Weight	see “Dimensions”
Manifold material	Aluminium
Note: aluminium bodies are often strong enough for operating pressures exceeding 210 bar (3000 psi), depending from the fatigue life expected in the specific application. If in doubt, consult our Service Network.	
Fluid	Mineral oil (HL, HLP) according DIN 51524
Fluid temperature range	-30 °C to 100 (-22 to 212 °F)
Viscosity range	5 to 800 mm^2/s (cSt)
Recommended degree of fluid contamination	Class 19/17/14 according to ISO 4406
Other technical data	see data sheet 18350-50

Note: for applications outside these parameters, please consult us.

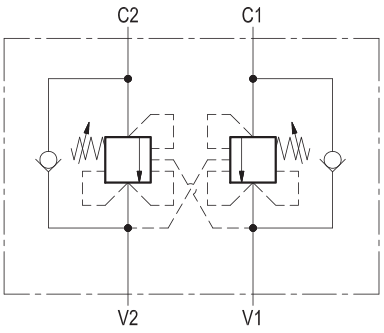

Characteristic curve

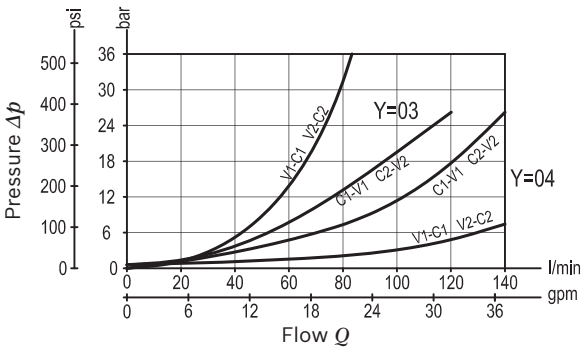

Dimensions [mm (inches)]

Ordering code

05.42.05	X	Y	Z

Dual counterbalance relief compensated

Pilot ratio	
02	8.2 : 1
10	3.2 : 1

Port sizes	V1 - V2	C1 - C2	
03	G 1/2	G 1/2	
04	G 3/4	G 3/4	

	SPRINGS		
	Adj. pressure range bar (psi)	Pres. increase bar/turn (psi/turn)	Std. setting Q=5 (l/min) bar (psi)
20	60-210 (900-3000)	54 (783)	200 (2900)
35	100-350 (1450-5000)	95 (1378)	350 (5000)

Tamper resistant cap code
ordering code 03.05.01.001
Mat. no. R930000470

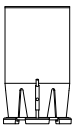

Preferred types

Type	Material number
054205020320000	R930001786
05420502033500A	R930001787
054205020420000	R930001789
05420502043500B	R930001790

Type	Material number
054205100320000	R930001942
05420510033500A	R930001794
054205100420000	R930001943
05420510043500A	R930001799

Dimensions

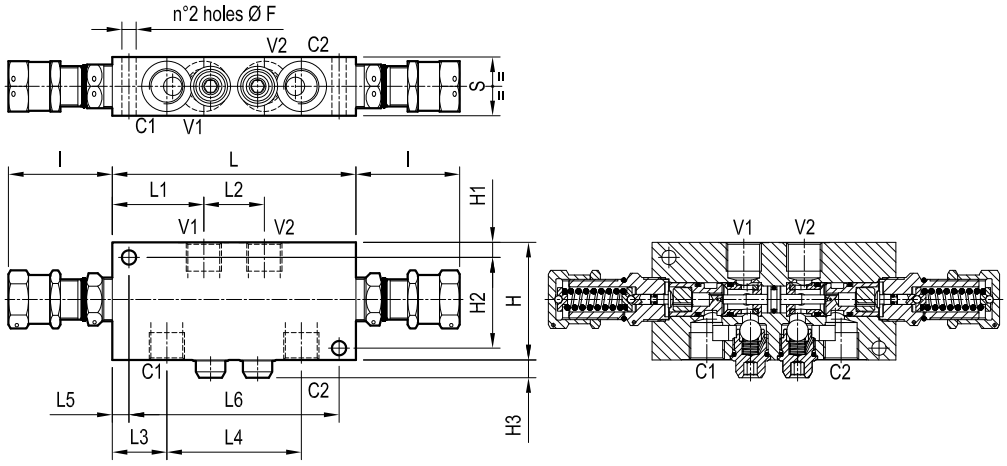

40 (1.58)	155 (6.1)	10 (0.39)	107 (4.21)	34 (1.34)	50 (1.97)	62.5 (2.46)	175 (6.89)	62 (2.44)	11 (0.43)	70 (2.76)	10 (0.39)	90 (3.54)	10.5 (0.41)		G 3/4	2.2 (4.9)
35 (1.38)	125 (4.92)	10 (0.39)	80 (3.15)	32.5 (1.28)	36 (1.42)	54.5 (2.15)	145 (5.71)	62 (2.44)	11 (0.43)	54 (2.13)	8 (0.32)	70 (2.76)	8.5 (0.34)		G 1/2	1.45 (3.2)
S	L6	L5	L4	L3	L2	L1	L	l	H3	H2	H1	H	F		Y	Weight kg (lbs)

Dual counterbalance, relief compensated

A-VBSO-DE-CC

08.42.05 - X - Y - Z

Technical data

Max. operating pressure	350 bar (5000 psi)
Max. flow	see performance graph
Weight	4.5 kg (9.9 lbs)
Manifold material	Zinc plated steel
Fluid	Mineral oil (HL, HLP) according DIN 51524
Fluid temperature range	-30 °C to 100 (-22 to 212 °F)
Viscosity range	5 to 800 mm^2/s (cSt)
Recommended degree of fluid contamination	Class 19/17/14 according to ISO 4406
Other technical data	see data sheet 18350-50

Note: for applications outside these parameters, please consult us.

Description

It provides static and dynamic control of load by regulating the flow IN and OUT of the actuator, through ports C1 and C2. This valve module includes 2 sections, each one composed by a check and a relief valve with balanced piston, pilot assisted by pressure in the opposite line: the check section allows free flow into the actuator, then holds the load against reverse movement; with pilot pressure applied at the line across, the pressure setting of the relief is reduced in proportion to the stated ratio until opening and allowing controlled reverse flow. Relief operates at the valve setting independent of back-pressure, but the piloted opening remains subject to additive pressure at V1 or V2.

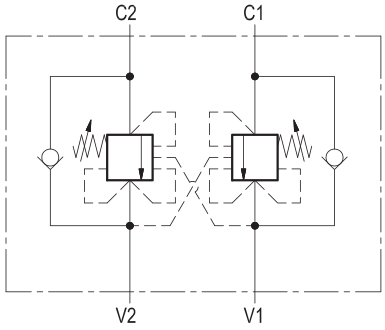

Characteristic curve

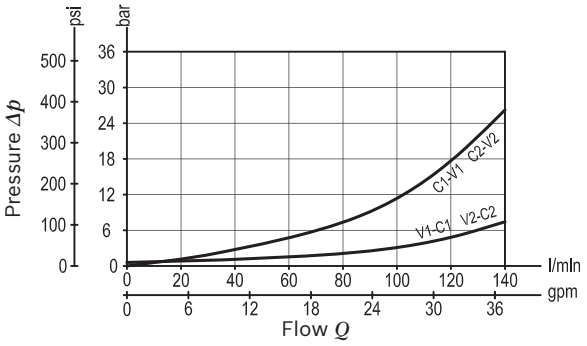

Dimensions [mm (inches)]

Ordering code

08.42.05	X	Y	Z

Dual counterbalance, relief compensated

Pilot ratio

02	8.2 : 1

Port sizes	V1 - V2	C1 - C2	
04	G 3/4	G 3/4	

	SPRINGS		
	Adj. pressure range bar (psi)	Pres. increase bar/turn (psi/turn)	Std. setting Q=5 (l/min) bar (psi)
35	100-350 (1450-5000)	95 (1378)	350 (5000)

Tamper resistant cap code
ordering code 03.05.01.001
Mat. no. R930000470

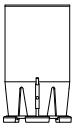

Preferred types

Type	Material number
084205020435000	R930001126

Type	Material number

Dimensions

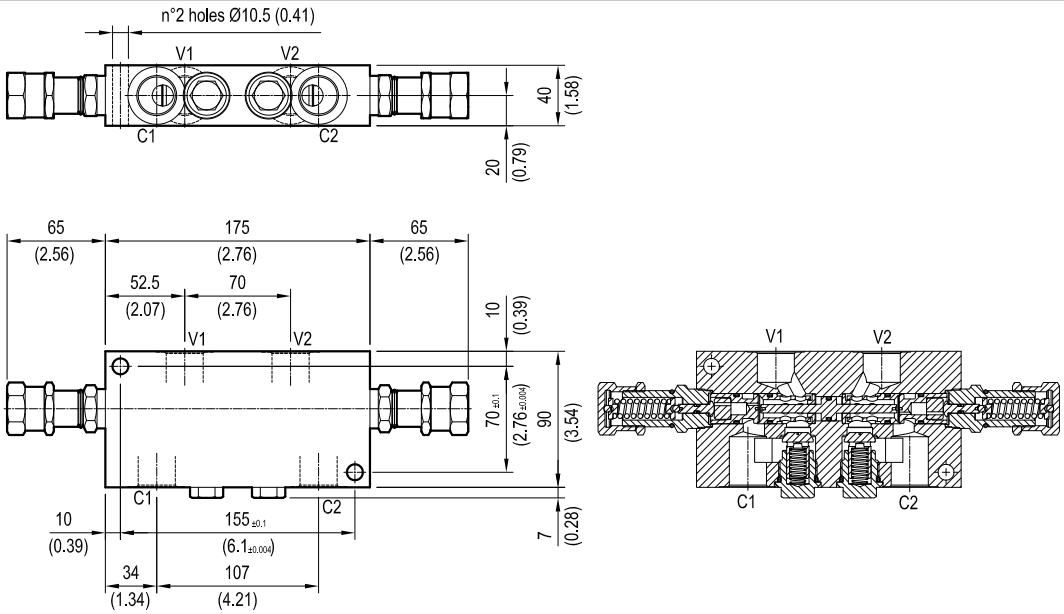

Dual counterbalance, vented

A-VBSO-DE-CCAP-78-FC2

08.44.31 - X - Y - Z

Technical data

Max. operating pressure	350 bar (5000 psi)
Max. flow	40 l/min. (11 gpm)
Weight	1.8 kg (4 lbs)
Manifold material	Zinc plated steel
Flange seal kit [1)]	E00000000000014 (R930005947)
Fluid	Mineral oil (HL, HLP) according DIN 51524
Fluid temperature range	-30 °C to 100 (-22 to 212 °F)
Viscosity range	5 to 800 mm^2/s (cSt)
Recommended degree of fluid contamination	Class 19/17/14 according to ISO 4406
Other technical data	see data sheet 18350-50
Relief setting: at least 1.3 times the highest expected load.	

Note: for applications outside these parameters, please consult us.

[1)] Seals for 10 valves.

Description

It provides static and dynamic control of load by regulating the flow IN and OUT of the actuator, through ports C1 and C2. This valve module includes 2 sections, each one composed by a check and a relief valve with balanced piston, pilot assisted by pressure in the opposite line: the check section allows free flow into the actuator, then holds the load against reverse movement; with pilot pressure applied at the line across, the pressure setting of the relief is reduced in proportion to the stated ratio until opening and allowing controlled reverse flow. Relief operates at the valve setting independent of back-pressure, but the piloted opening remains subject to additive pressure at V1 or V2. The relief spring chambers are vented to air: relief and piloted opening are independent of back-pressure at V1 or V2. For better safety and compact assembly, the C1 and C2 ports are gasket mounted directly on the actuator.

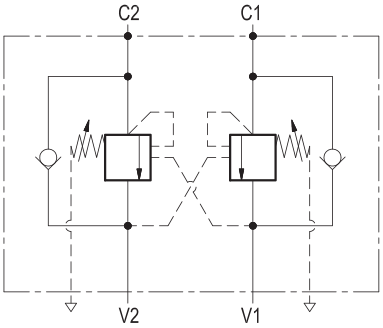

Characteristic curve

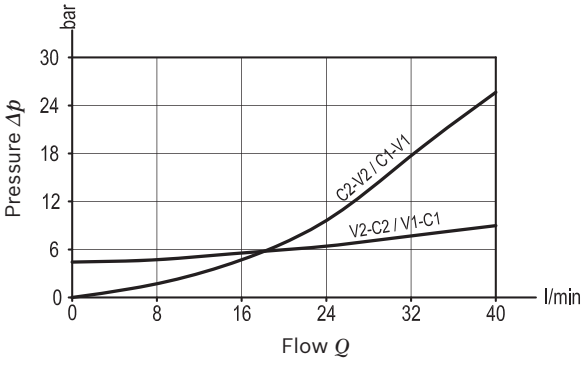

RE 18300-64/03.2013 Bosch Rexroth AG Control Valves

Dimensions [mm (inches)]

Ordering code

08.44.31	X	Y	Z

Dual counterbalance, vented

Pilot ratio

03	4.1 : 1

Port sizes	V1 - V2	C1 - C2	
02	G 3/8	Ø 7 (0.28)	

	SPRINGS		
	Adj. pressure range bar (psi)	Pres. increase bar/turn (psi/turn)	Std. setting Q=5 (l/min) bar (psi)
35	180-350 (2610-5000)	140 (2000)	350 (5000)

Tamper resistant cap code
ordering code 11.04.36.001
Mat. no. R930005189

Preferred types

Type	Material number
084431030235000	R930001974

Type	Material number

Dimensions

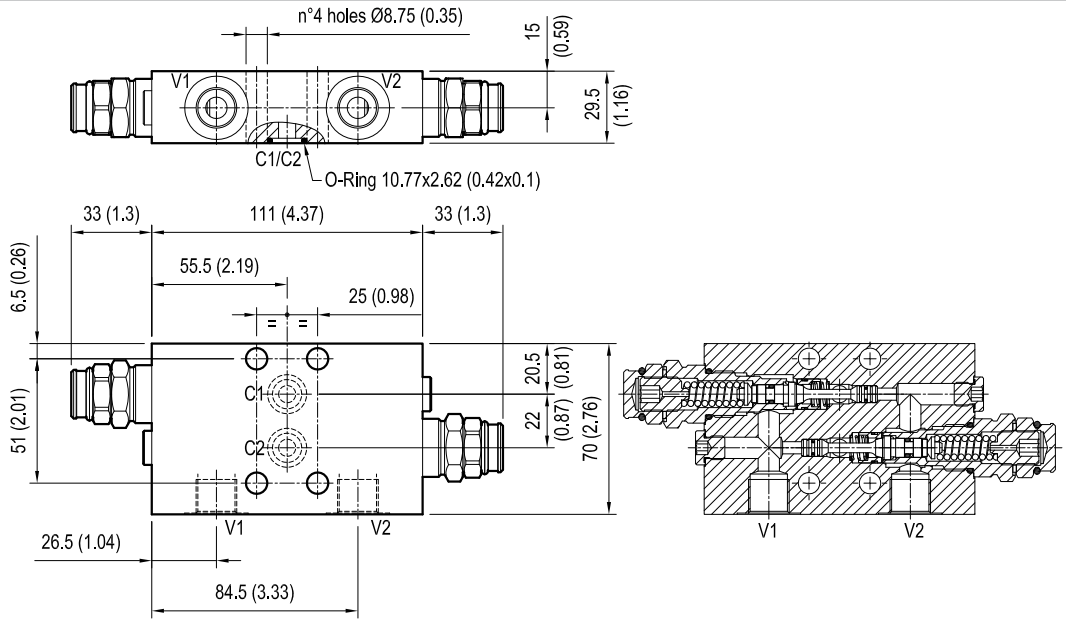

Dual counterbalance, vented

A-VBSO-DE-CCAP-33

08.44.94 - X - Y - Z

Technical data

Max. operating pressure	410 bar (5945 psi)
Max. flow	150 l/min. (40 gpm)
Weight	4.9 kg (10.8 lbs)
Manifold material	Zinc plated steel
Fluid	Mineral oil (HL, HLP) according DIN 51524
Fluid temperature range	-30 °C to 100 (-22 to 212 °F)
Viscosity range	5 to 800 mm^2/s (cSt)
Recommended degree of fluid contamination	Class 19/17/14 according to ISO 4406
MTTFd	150 years see 18350-51
Other technical data	see data sheet 18350-50
Relief setting: at least 1.3 times the highest expected load.	

Note: for applications outside these parameters, please consult us.

Description

It provides static and dynamic control of load by regulating the flow IN and OUT of the actuator, through ports C1 and C2. This valve module includes 2 sections, each one composed by a check and a relief valve pilot assisted by pressure in the opposite line: the check section allows free flow into the actuator, then holds the load against reverse movement; with pilot pressure applied at the line across, the pressure setting of the relief is reduced in proportion to the stated ratio until opening and allowing controlled reverse flow. The relief spring chambers are vented to air: relief and piloted opening are independent of back-pressure at V1 or V2.

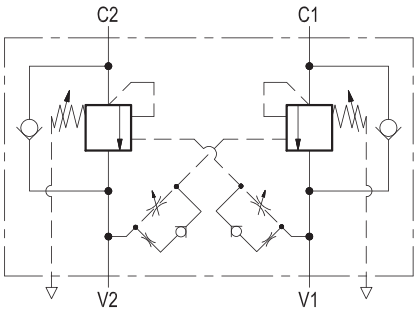

Characteristic curve

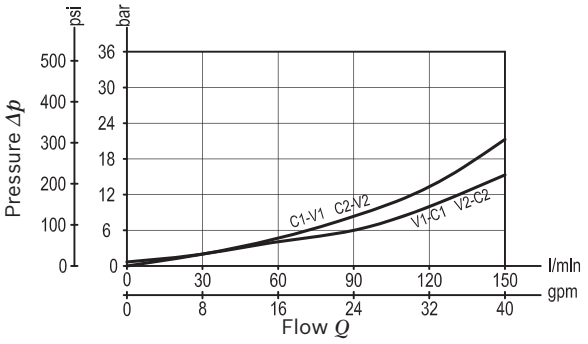

Dimensions [mm (inches)]

Ordering code

08.44.94	X	Y	Z

Dual counterbalance, vented

Pilot ratio

03	4.1

Port sizes	V1 - V2	C1 - C2	
04	G 3/4	G 3/4	

	SPRINGS		
	Adj. pressure range bar (psi)	Pres. increase bar/turn (psi/turn)	Std. setting Q=5 (l/min) bar (psi)
35	150-350 (2175-5000)	110 (1595)	350 (5000)

Pressure setting up to 410 bar: code on request.

Tamper resistant cap code
ordering code 11.04.30.001
Mat. no. R930005194

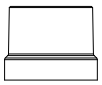

Preferred types

Type	Material number
08449403043500B	R930008382

Type	Material number

Dimensions

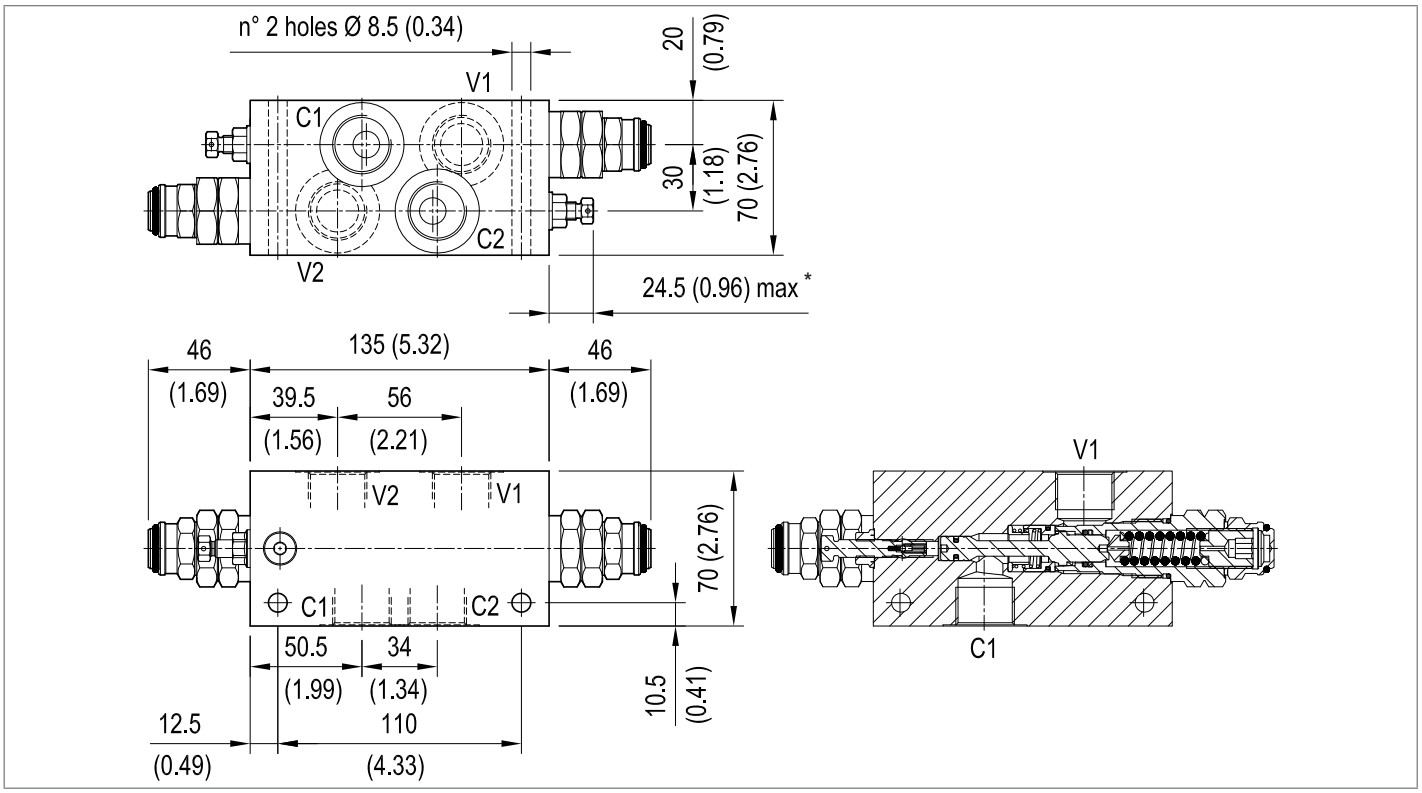

* The adjusting screw can be completely unscrewed. Do not exceed the indicated protrusion range of the adjusted screw.

Dual counterbalance, vented

VBSO-DE-CCAP-33-FC2

05.44.31 - X - Y - Z

Description

It provides static and dynamic control of load by regulating the flow IN and OUT of the actuator, through ports C1 and C2. This valve module includes 2 sections, each one composed by a check and a relief valve pilot assisted by pressure in the opposite line: the check section allows free flow into the actuator, then holds the load against reverse movement; with pilot pressure applied at the line across, the pressure setting of the relief is reduced in proportion to the stated ratio until opening and allowing controlled reverse flow. Back-pressure at V1 or V2 is additive to the pressure setting in all functions. For better safety and compact assembly, the C1 and C2 ports are gasket mounted directly on the actuator.

Technical data

Operating pressure	up to 210 bar (3000 psi)
Max. flow	150 l/min. (40 gpm)
Weight	2.2 kg (4.8 lbs)
Manifold material	Anodized aluminium
Note: aluminium bodies are often strong enough for operating pressures exceeding 210 bar (3000 psi), depending from the fatigue life expected in the specific application. If in doubt, consult our Service Network.	
Flange seal kit [1]	E00000000000012 (R930005945)
Fluid	Mineral oil (HL, HLP) according DIN 51524
Fluid temperature range	-30 °C to 100 (-22 to 212 °F)
Viscosity range	5 to 800 mm^2/s (cSt)
Recommended degree of fluid contamination	Class 19/17/14 according to ISO 4406
Other technical data	see data sheet 18350-50
Relief setting: at least 1.3 times the highest expected load.	

Note: for applications outside these parameters, please consult us.

[1] Seals for 05 valves.

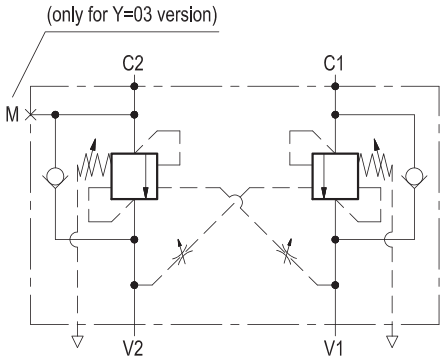

Characteristic curve

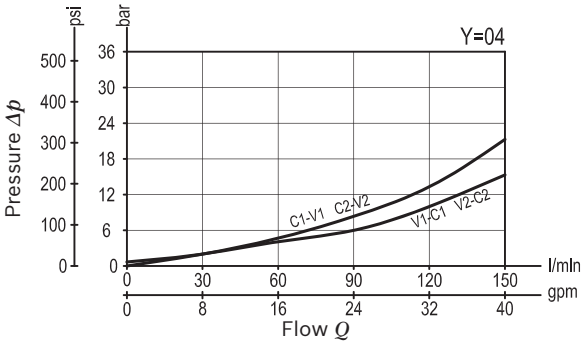

Ordering code

05.44.31	X	Y	Z

Dual counterbalance, vented

Pilot ratio

03	4:1	
13	4:1	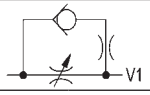

	SPRINGS		
	Adj. pressure range bar (psi)	Pres. increase bar/turn (psi/turn)	Std. setting Q=5 (l/min.) bar (psi)
35	150-350 (2175-5000)	110 (1595)	350 (5000)

Tamper resistant cap code
ordering code 11.04.45.001
Mat. no. R930006433

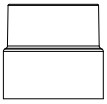

Port sizes	V1 - V2	C1 - C2	M
03	G 1/2	Ø 13 (0.51)	G 1/4
04	G 3/4	Ø 13 (0.51)	/

Preferred types

Type	Material number
05443103033500F	R930058463
05443103043500E	R930058481

Type	Material number
05443113033500F	R930058466
05443113043500E	R930058482

Dimensions

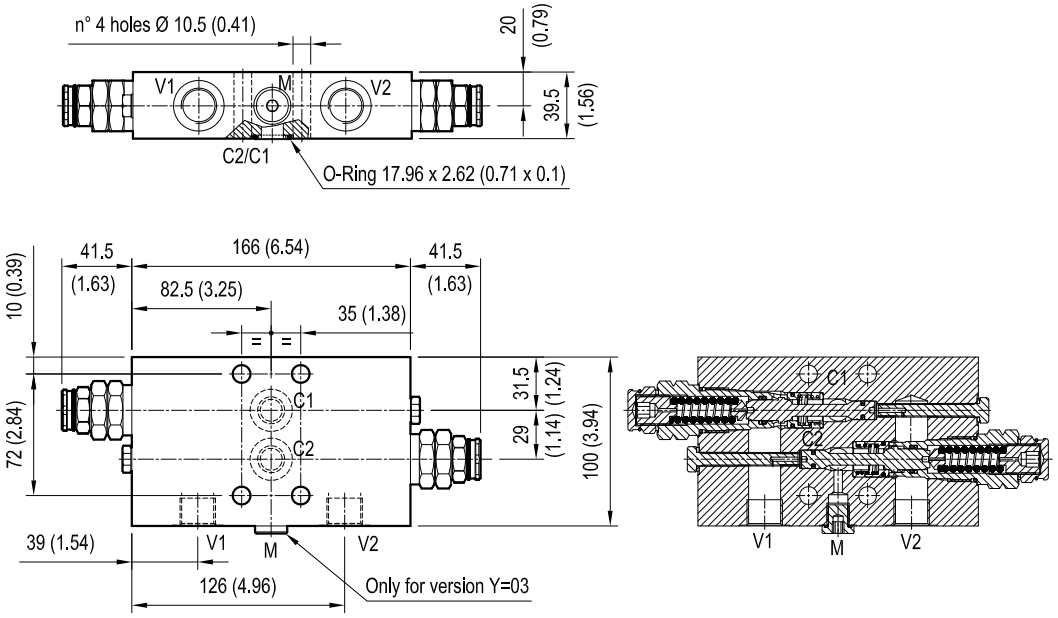

Load holding/motion control

Counterbalance valves with regenerative function

Designation	Description	Ports	Code	Data sheet	Page
Dual, with regenerative function, standard configuration	VBSO-DE-CR-78	G 3/8	054458XYZ	18307-90	173
Dual, with regenerative function, standard configuration	VBSO-DE-CR-30	G 1/2	054483XYZ	18307-91	175
Dual, with regenerative function, standard configuration	VBSO-DE-CR-33	G 1/2	054413XYZ	18307-92	177
Dual, with regenerative function, pressure sensitive	VBSO-DE-CR-EA-33	G 1/2	07062051	18307-93	179
Dual, with regenerative function, solenoid controlled	VBSO-DE-CR-EE-33	G 3/4	054481XYZ	18307-94	181
Single, with regenerative function, pressure controlled	A-VBSO-CR-EA-42	Flangeable	07067399	18307-95	183
Single, with regenerative function, pressure controlled	A-VBSO-CR-EA-42	Flangeable	07067030	18307-96	185

Dual counterbalance, with regenerative function

VBSO-DE-CR-78

05.44.58 - X - Y - Z

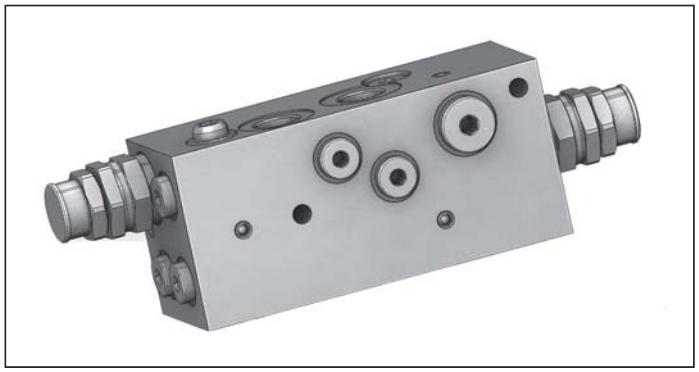

Technical data

Operating pressure	up to 210 bar (3000 psi)
Max. flow	40 l/min. (11 gpm)
Weight	1.33 kg (2.9 lbs)
Manifold material	Anodized aluminium
Note: aluminium bodies are often strong enough for operating pressures exceeding 210 bar (3000 psi), depending from the fatigue life expected in the specific application. If in doubt, consult our Service Network.	
Fluid	Mineral oil (HL, HLP) according DIN 51524
Fluid temperature range	-30 °C to 100 (-22 to 212 °F)
Viscosity range	5 to 800 mm^2/s (cSt)
Recommended degree of fluid contamination	Class 19/17/14 according to ISO 4406
Other technical data	see data sheet 18350-50
Relief setting: at least 1.3 times the highest expected load.	

Note: for applications outside these parameters, please consult us.

Description

It provides static and dynamic control of load by regulating the flow IN and OUT of the cylinder, through ports C2 and C1. This valve module includes a pilot assisted counterbalance (1) on the line C2-V2 for control of the full bore side of the cylinder, a check valve between V1 and C1 which allows flow into the annular side and locks in reverse direction, a pilot assisted by-pass counterbalance “fully vented type” (2) which feeds into the full bore (C2) the flow coming out from the annular side (C1) in order to increase the extension speed. The valve (2) is internally vented into V1 which acts as “Tank” line during cylinder extension. The pilot line for the valve (2) has a controlled cross-over drain for hydraulic damping.

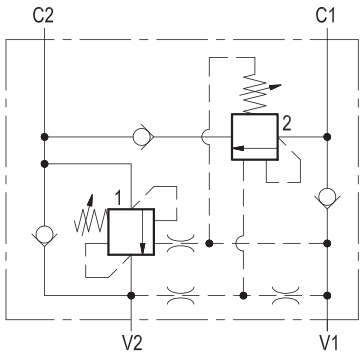

Characteristic curve

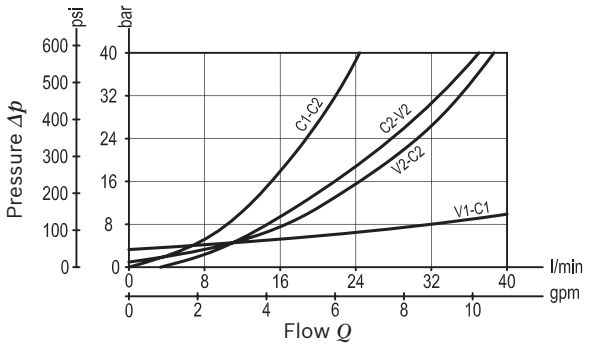

Dimensions [mm (inches)]

Ordering code

05.44.58	X	Y	Z

Dual counterbalance,
with regenerative function

Pilot ratio

03	4.1:1	Valve 1 / Valve 2

Port sizes	V1 - V2	C1 - C2	
02	G 3/8	G 3/8	

		SPRINGS		
		Adj. pressure range bar (psi)	Pres. increase bar/turn (psi/turn)	Std. setting Q=5 (l/min) bar (psi)
35	Valve 1	180-350 (2610-5000)	140 (2030)	350 (5000)
	Valve 2	180-350 (2610-5000)	140 (2030)	350 (5000)

Tamper resistant cap
ordering code 11.04.36.001
Mat. no .R930005189

Preferred types

Type	Material number
05445803023500A	R930007287

Type	Material number

Dimensions

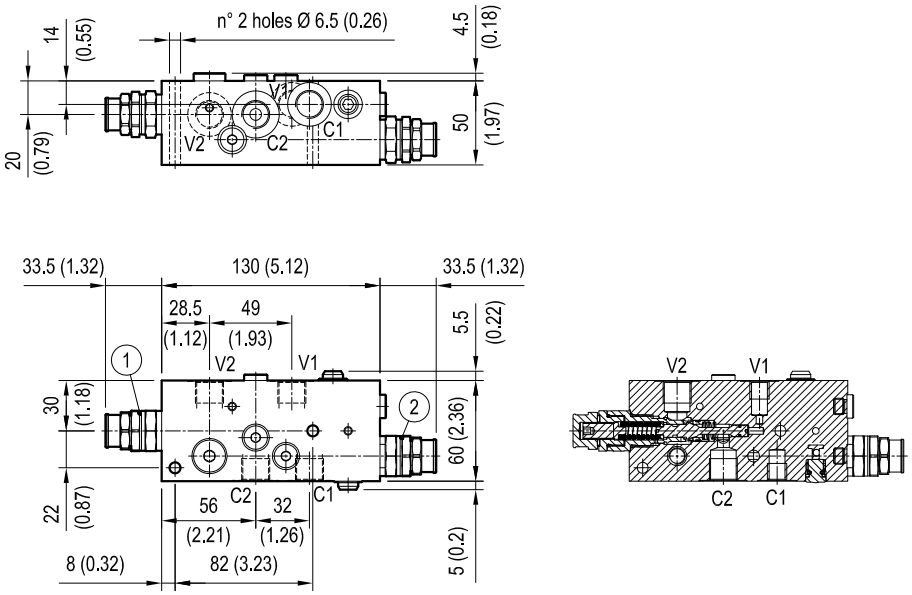

Dual counterbalance, with regenerative function

VBSO-DE-CR-30

05.44.83 - X - Y - Z

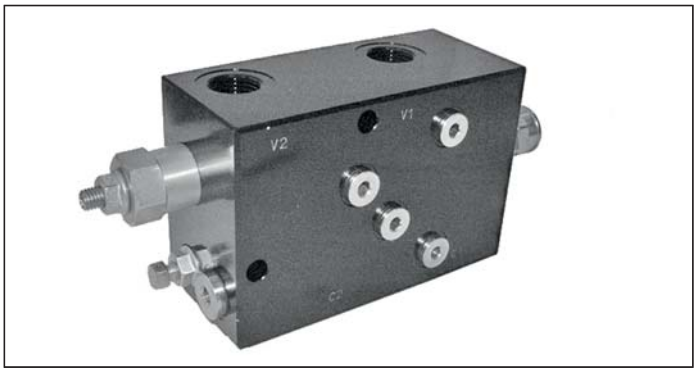

Technical data

Operating pressure	up to 210 bar (3000 psi)
Max. flow	60 l/min. (16 gpm)
Weight	2.3 kg (5.1 lbs)
Manifold material	Anodized aluminium
Note: aluminium bodies are often strong enough for operating pressures exceeding 210 bar (3000 psi), depending from the fatigue life expected in the specific application. If in doubt, consult our Service Network.	
Fluid	Mineral oil (HL, HLP) according DIN 51524
Fluid temperature range	-30 °C to 100 (-22 to 212 °F)
Viscosity range	5 to 800 mm^2/s (cSt)
Recommended degree of fluid contamination	Class 19/17/14 according to ISO 4406
Other technical data	see data sheet 18350-50
Relief setting: at least 1.3 times the highest expected load.	

Note: for applications outside these parameters, please consult us.

Description

It provides static and dynamic control of load by regulating the flow IN and OUT of the cylinder, through ports C2 and C1. This valve module includes a pilot assisted counterbalance (2) on the line C2-V2 for control of the full bore side of the cylinder, a check valve between V1 and C1 which allows flow into the annular side and locks in reverse direction, a pilot assisted by-pass counterbalance “fully vented type” (1) which feeds into the full bore (C2) the flow coming out from the annular side (C1) in order to increase the extension speed. The valve (1) is internally vented into V1 which acts as “Tank” line during cylinder extension. The pilot line for the valve (1) has a one way adjustable cross-over drain for hydraulic damping.

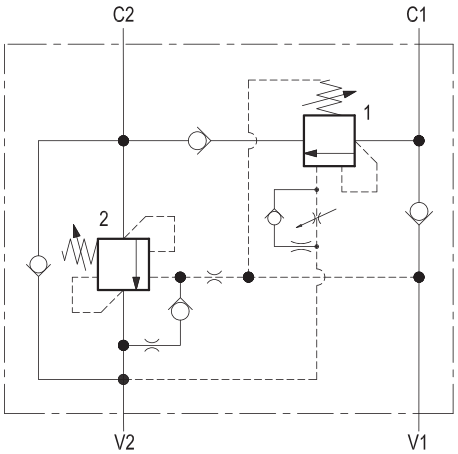

Characteristic curve

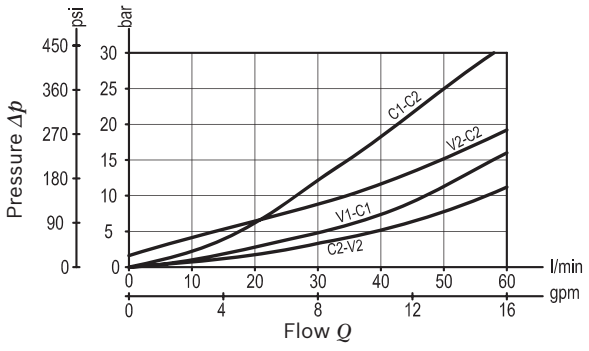

Ordering code

05.44.83	X	Y	Z

Dual counterbalance,
with regenerative function

Pilot ratio

03	Valve 1	4.2 : 1
	Valve 2	2.1 :1

Port sizes	V1 - V2	C1 - C2	
03	G 1/2	G 1/2	

		SPRINGS		
		Adj. pressure range bar (psi)	Pres. increase bar/turn (psi/turn)	Std. setting Q=5 (l/min) bar (psi)
35	Valve 1	100-350 (1450-5000)	138 (2001)	350 (5000)
	Valve 2	300-410 (4350-5950)	122 (1769)	350 (5000)

Tamper resistant cap
ordering code 11.04.30.001 Mat. no. R930005387 (1)
11.04.23.002 Mat. no. R930000752 (2)

Preferred types

Type	Material number
05448303033500A	R930007356

Type	Material number

Dimensions

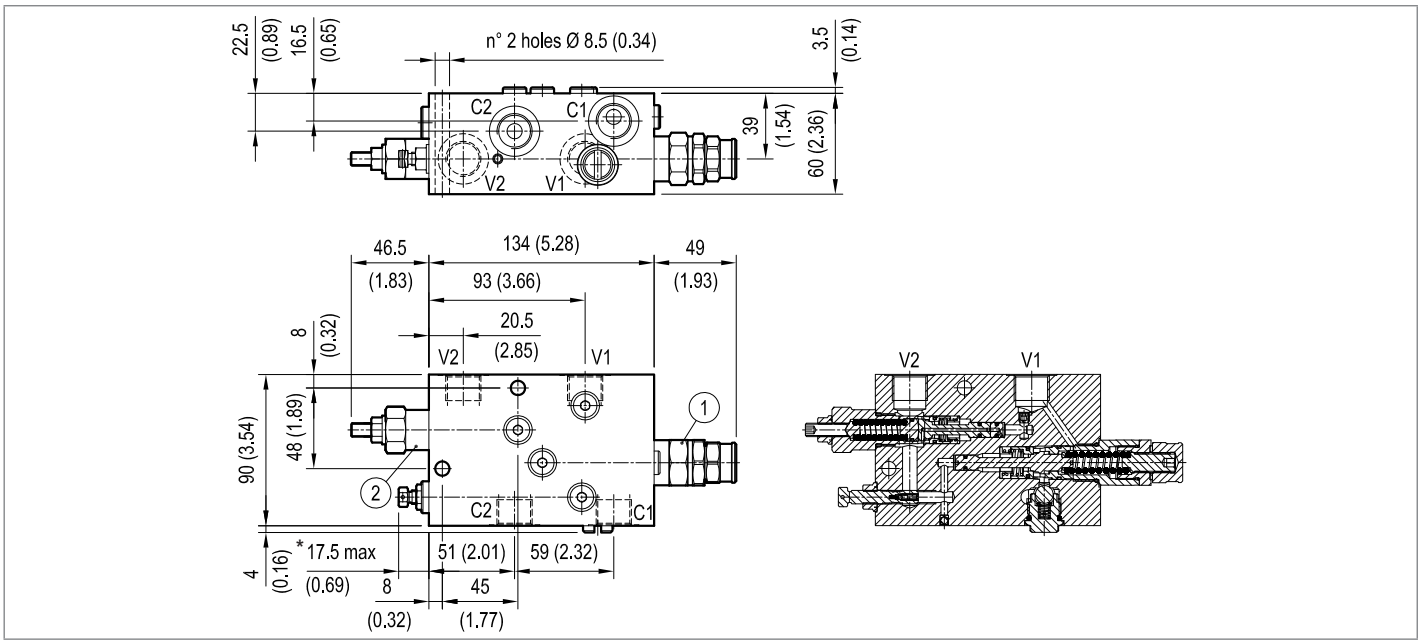

* The adjusting screw can be completely unscrewed. Do not exceed the indicated protrusion range of the adjusted screw.

Dual counterbalance, with regenerative function

VBSO-DE-CR-33

05.44.13 - X - Y - Z

Description

It provides static and dynamic control of load by regulating the flow IN and OUT of the cylinder, through ports C2 and C1. This valve module includes a pilot assisted counterbalance (2) on the line C2-V2 for control of the full bore side of the cylinder, a check valve between V1 and C1 which allows flow into the annular side and locks in reverse direction, a pilot assisted by-pass counterbalance “fully vented type” (1) which feeds into the full bore (C2) the flow coming out from the annular side (C1) in order to increase the extension speed. The valve (1) is internally vented into V1 which acts as “Tank” line during cylinder extension. The pilot line for the valve (1) has a one way adjustable cross-over drain for hydraulic damping.

Technical data

Operating pressure	up to 210 bar (3000 psi)
Max. flow	100 l/min. (26 gpm)
Weight	2.6 kg (5.7 lbs)
Manifold material	Anodized aluminium
Note: aluminium bodies are often strong enough for operating pressures exceeding 210 bar (3000 psi), depending from the fatigue life expected in the specific application. If in doubt, consult our Service Network.	
Fluid	Mineral oil (HL, HLP) according DIN 51524
Fluid temperature range	-30 °C to 100 (-22 to 212 °F)
Viscosity range	10 to 500 mm^2/s (cSt)
Recommended degree of fluid contamination	Class 19/17/14 according to ISO 4406
Other technical data	see data sheet 18350-50
Relief setting: at least 1.3 times the highest expected load.	

Note: for applications outside these parameters, please consult us.

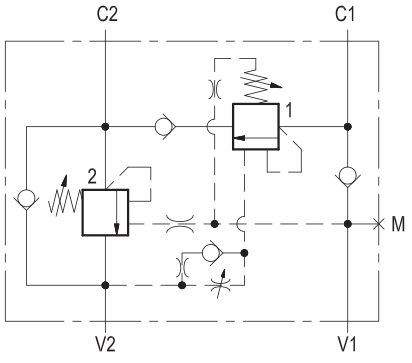

Characteristic curve

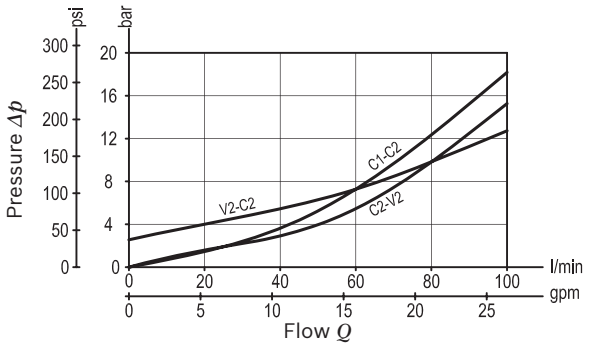

Dimensions [mm (inches)]

Ordering code

05.44.13	X	Y	Z

Dual counterbalance,
with regenerative function

Pilot ratio

03	4:1

Port sizes	V1 - V2	C1 - C2	M
03	G 1/2	G 1/2	G 1/4

		SPRINGS		
		Adj. pressure range bar (psi)	Pres. increase bar/turn (psi/turn)	Std. setting Q=5 (l/min) bar (psi)
35	Valve 1	150-350 (2175-5000)	110 (1595)	350 (5000)
	Valve 2	150-350 (2175-5000)	110 (1595)	350 (5000)

Tamper resistant cap
ordering code 11.04.30.001
Mat. no. R930005194

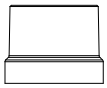

Preferred types

Type	Material number
05441303033500F	R930007159

Type	Material number

Dimensions

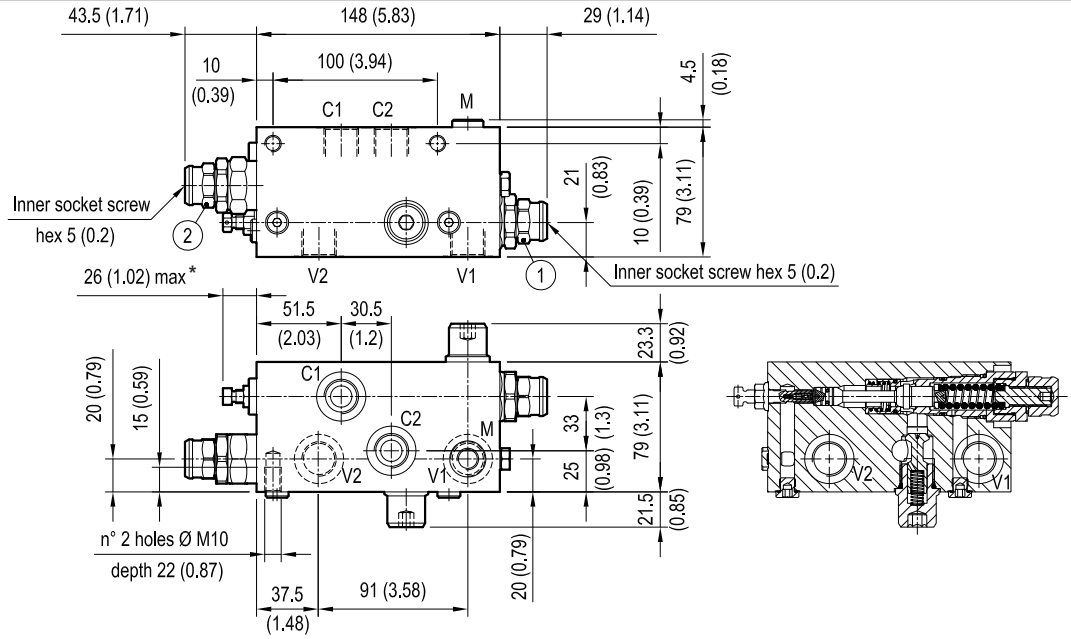

* The adjusting screw can be completely unscrewed. Do not exceed the indicated protrusion range of the adjusted screw.

Dual counterbalance with regenerative function, pressure sensitive

VBSO-DE-CR-EA-33 07.06.20.51

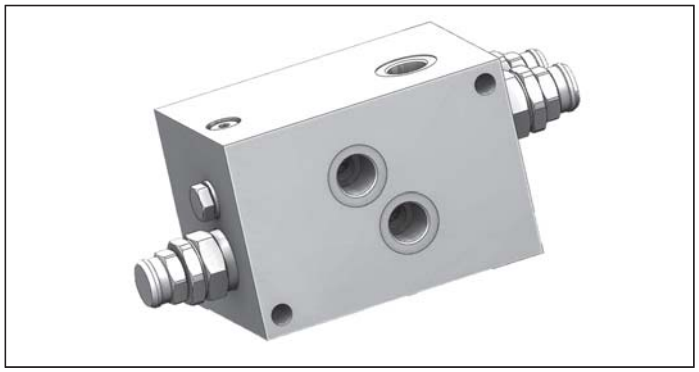

Technical data

Operating pressure	up to 210 bar (3000 psi)
Max. flow	100 l/min. (26 gpm)
Weight	4.4 kg (9.7 lbs)
Manifold material	Aluminium
Note: aluminium bodies are often strong enough for operating pressures exceeding 210 bar (3000 psi), depending from the fatigue life expected in the specific application. If in doubt, consult our Service Network.	
Fluid	Mineral oil (HL, HLP) according DIN 51524
Fluid temperature range	-30 °C to 100 (-22 to 212 °F)
Viscosity range	10 to 500 mm^2/s (cSt)
Recommended degree of fluid contamination	Class 19/17/14 according to ISO 4406
Other technical data	see data sheet 18350-50
Relief setting: at least 1.3 times the highest expected load.	

Note: for applications outside these parameters, please consult us.

Description

It provides static and dynamic control of load by regulating the flow IN and OUT of the cylinder, through ports C2 and C1. This valve module includes a pilot assisted counterbalance (1) on the line C2-V2 for control of the full bore side of the cylinder, a one way pilot operated metering valve (2) between V1 and C1 which allows flow into the annular side and locks/controls flow in reverse direction, a pilot assisted by-pass counterbalance “fully vented type” (3) which provides the regenerative function by feeding into the full bore (C2) the flow coming out from the annular side (C1). The extension speed increment given by the regenerative function disappears when line pressure in V2 increases above the pressure threshold needed to pilot open valve (2).

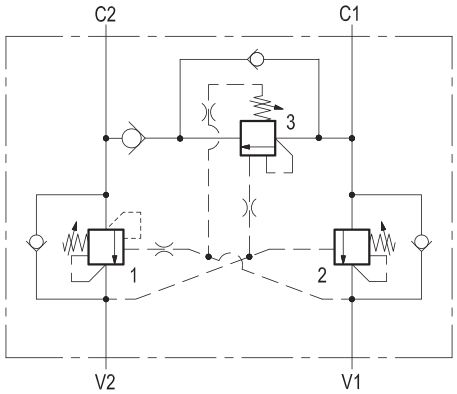

Characteristic curve

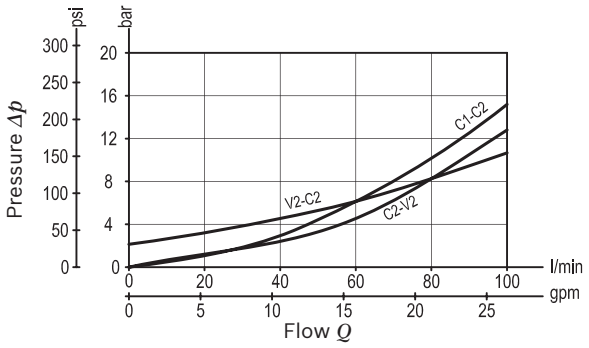

Dimensions [mm (inches)]

Ordering code

07.06.20.51

Dual counterbalance
with regenerative function,
pressure sensitive

Pilot ratio	
Valve 1	4:1
Valve 2	Equal area
Valve 3	4:1

Port sizes	V1 - V2	C1 - C2
	G 1/2	G 1/2

	SPRINGS		
	Adj. pressure range bar (psi)	Pres. increase bar/turn (psi/turn)	Std. setting Q=5 (l/min.) bar (psi)
Valve 1	150-350 (2175-5000)	110 (1595)	350 (5000)
Valve 2	50-200 (725-2900)	52 (754)	180 (2600)
Valve 3	150-350 (2175-5000)	110 (1595)	350 (5000)

Tamper resistant cap
ordering code 11.04.30.001
Mat. no. R930005194

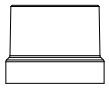

Type	Material number
07062051000000F	R930007146

Type	Material number

Dimensions

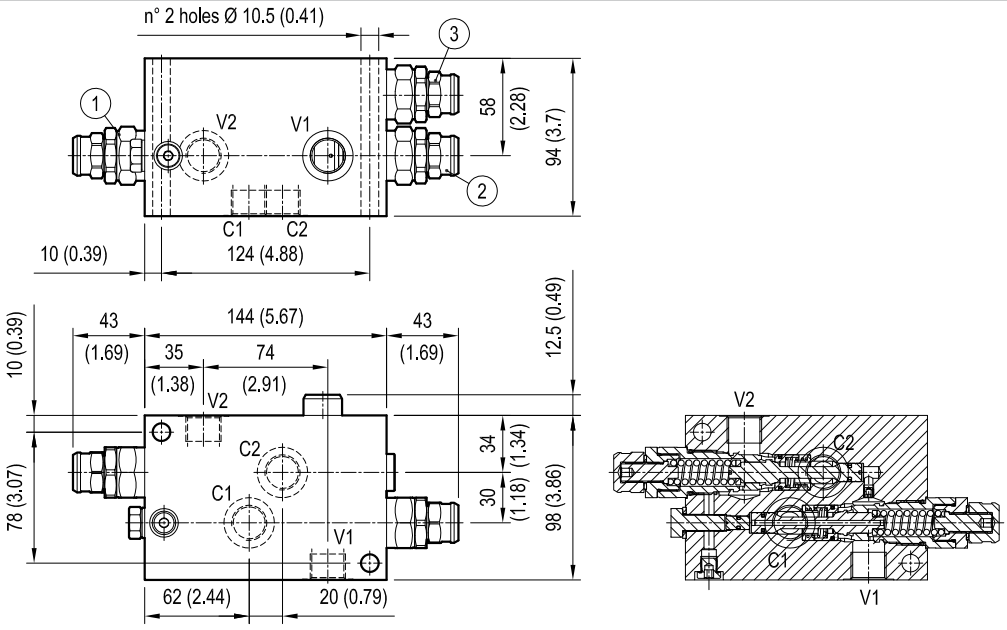

Dual counterbalance, with regenerative function solenoid controlled

VBSO-DE-CR-EE-33 05.44.81 - X - Y - Z

Description

It provides static and dynamic control of load by regulating the flow IN and OUT of the cylinder, through ports C2 and C1. This valve module includes a pilot assisted counterbalance (2) on the line C2-V2 for control of the full bore side of the cylinder, a check valve between V1 and C1 which allows flow into the annular side and locks in reverse direction, a pilot assisted by-pass counterbalance “fully vented type” (1) which can feed into the full bore (C2) the flow coming out from the annular side (C1) in order to increase the extension speed. A normally open solenoid cartridge controls the by-pass flow from valve (1) and diverts it either to V1 (for low speed extension) or to C2 (high speed extension with regenerative mode).

Technical data

Operating pressure	up to 210 bar (3000 psi)
Max. flow	100 l/min. (26 gpm)
Weight	5.2 kg (11.7 lbs)
Manifold material	Anodized aluminium
Note: aluminium bodies are often strong enough for operating pressures exceeding 210 bar (3000 psi), depending from the fatigue life expected in the specific application. If in doubt, consult our Service Network.	
Fluid	Mineral oil (HL, HLP) according DIN 51524
Fluid temperature range	-30 °C to 100 (-22 to 212 °F)
Viscosity range	10 to 500 mm^2/s (cSt)
Recommended degree of fluid contamination	Class 19/17/14 according to ISO 4406
Nominal voltage	24 V DC
Power	20 W
For other details see data sheet 18325-90	
Other technical data	see data sheet 18350-50
Relief setting: at least 1.3 times the highest expected load.	

Note: for applications outside these parameters, please consult us.

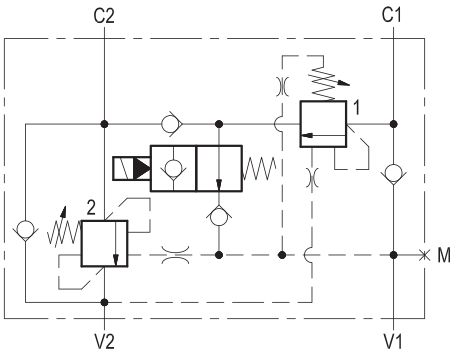

Characteristic curve

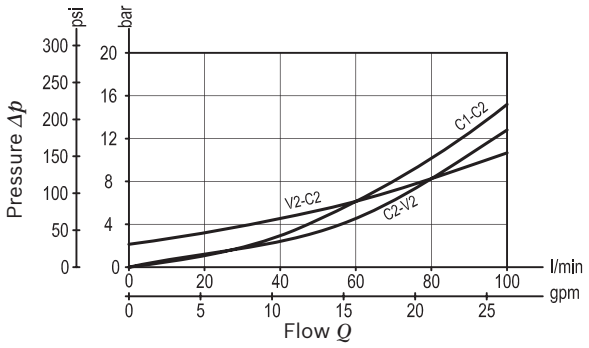

Dimensions [mm (inches)]

Ordering code

05.44.81	X	Y	Z

Dual counterbalance, with regenerative function solenoid controlled

Pilot ratio

03	Valve 1 / Valve 2	4:1

Port sizes	V1 - V2	C1 - C2	M
04	G 3/4	G 3/4	G 1/4

		SPRINGS		
		Adj. pressure range bar (psi)	Pres. increase bar/turn (psi/turn)	Std. setting Q=5 (l/min) bar (psi)
35	Valve 1	150-350 (2175-5000)	110 (1595)	350 (5000)
	Valve 2	150-350 (2175-5000)	110 (1595)	350 (5000)

Tamper resistant cap
ordering code 11.04.30.001
Mat. no. R930005194

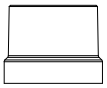

Preferred types

Type	Material number
05448103043500E	R930007133

Type	Material number

Dimensions

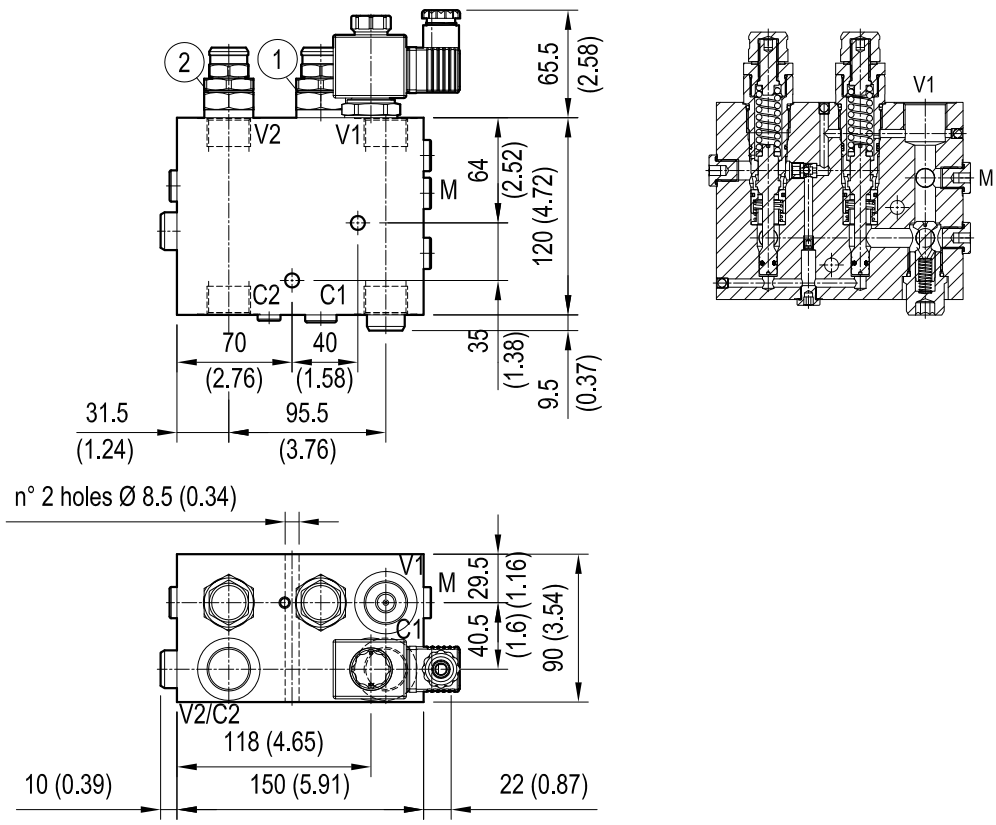

Single counterbalance with regenerative function, pressure controlled

A-VBSO-CR-EA-42 07.06.73.99

Technical data

Max. operating pressure	410 bar (5945 psi)
Max. flow	220 l/min. (58 gpm)
Weight	14.5 kg (32 lbs)
Manifold material	Zinc plated steel
Flange seal kit [1]	E00000000000045 (R930040885)
Fluid	Mineral oil (HL, HLP) according DIN 51524
Fluid temperature range	-20 °C to 120 (-4 to 248 °F)
Viscosity range	5 to 800 mm^2/s (cSt)
Recommended degree of fluid contamination	Class 19/17/14 according to ISO 4406
Other technical data	see data sheet 18350-50
Relief setting: at least 1.3 times the highest expected load.	

Note: for applications outside these parameters, please consult us.

[1] Seals for 10 valves

Description

It provides high speed cylinder extension at low pressure operation; the extension speed increment given by the regenerative function disappears when line pressure in V2 increases above the pressure threshold needed to pilot open valve (1) which diverts to tank the flow from the annular chamber. The pilot assisted by-pass counterbalance “fully vented type” valve (2) provides the regenerative function by feeding into the full bore (C2) the flow coming out from the annular side (C1). The by-pass valve (2) is piloted by V2 pressure and is internally vented into V1 which acts as “Tank” line during cylinder extension. For better safety and compact assembly, the C1 and C2 ports are gasket mounted directly on the actuator.

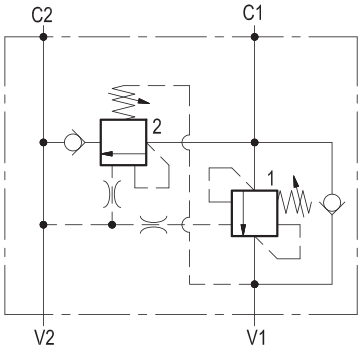

Characteristic curve

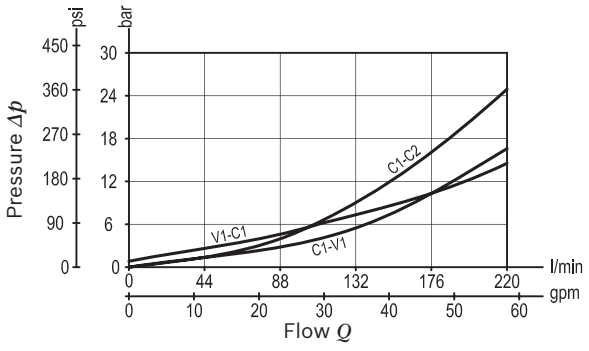

RE 18307-95/03.2010 Bosch Rexroth AG Control Systems

183

Dimensions [mm (inches)]

Ordering code

07.06.73.99

Single counterbalance with regenerative function, pressure controlled

Pilot ratio

6:1

Port sizes	V1 - V2	C1 - C2
	3/4 SAE 6000	Ø 16.5 (0.65)

	SPRINGS			
	Adj. pressure range bar (psi)	Pres. increase bar/turn (psi/turn)	Std. setting Q=5 (l/min.) bar (psi)	
Valve 1	30-80 (450-1160)	17 (247)	80 (1160)	Pilot opening with 100 bar (1450 psi) rod side
Valve 2	120-360 (1750-5200)	60 (870)	350 (5000)	

Pressure setting up to 410 bar: code on request.

Tamper resistant cap
ordering code 11.04.30.001
Mat. no. R930005194

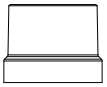

Preferred types

Type	Material number
070673990000V0A	R930007261

Type	Material number

Dimensions

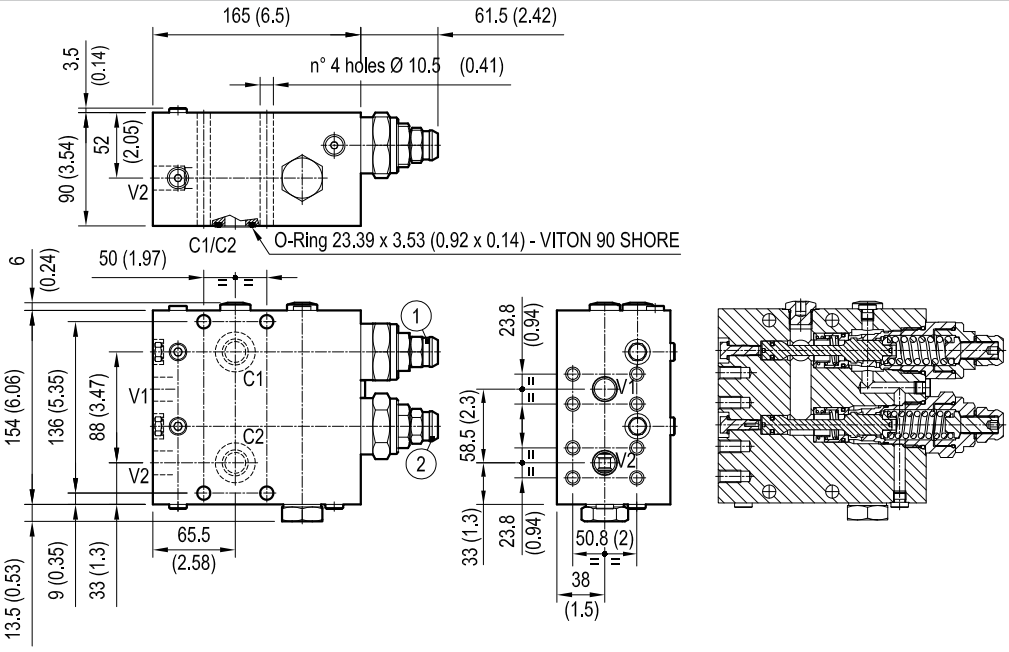

Single counterbalance with regenerative function, pressure controlled

A-VBSO-CR-EA-42 07.06.70.30

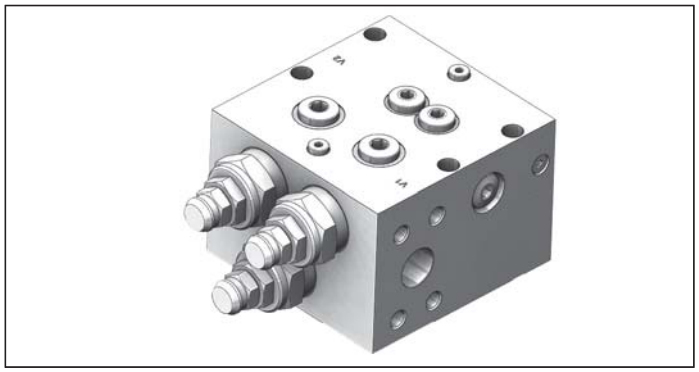

Technical data

Max. operating pressure	410 bar (5945 psi)
Max. flow	400 l/min. (106 gpm)
Weight	18.9 kg (41.7 lbs)
Manifold material	Zinc plated steel
Flange seal kit [1)]	E00000000000050 (R930052830)
Fluid	Mineral oil (HL, HLP) according DIN 51524
Fluid temperature range	-20 °C to 120 (-4 to 248 °F)
Viscosity range	5 to 800 mm^2/s (cSt)
Recommended degree of fluid contamination	Class 19/17/14 according to ISO 4406
Other technical data	see data sheet 18350-50

Note: for applications outside these parameters, please consult us.

[1)] Seals for 10 valves

Description

It provides high speed cylinder extension at low pressure operation; the extension speed increment given by the regenerative function disappears when line pressure in V2 increases above the pressure threshold needed to pilot open valve (1) which diverts to tank the flow from the annular chamber. Two pilot assisted by-pass counterbalance “fully vented type” valves (2 and 3) provide the regenerative function by feeding into the full bore (C2) the flow coming out from the annular side (C1). The by-pass valves (2 and 3) are piloted by V2 pressure and are internally vented into V1 which acts as “Tank” line during cylinder extension. For better safety and compact assembly, the C1 and C2 ports are gasket mounted directly on the actuator.

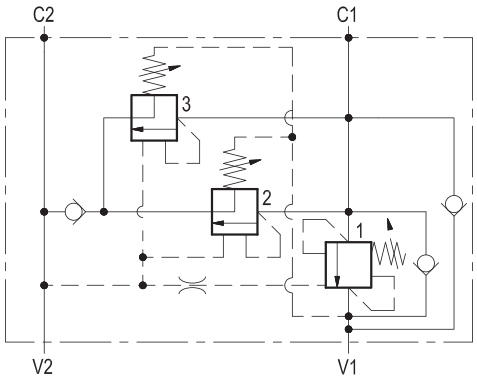

Characteristic curve

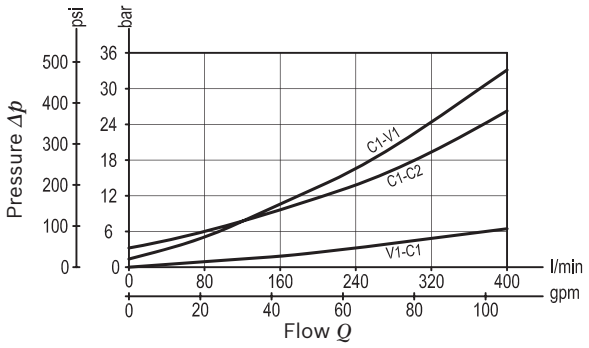

RE 18300-96/03.2013 Bosch Rexroth AG Control Valves

Ordering code

07.06.70.30

Single counterbalance with regenerative function, pressure controlled

Pilot ratio

Valve 1	6:1
Valve 2	6:1
Valve 3	6:1

Port sizes	V1 - V2	C1 - C2
	1-1/4 SAE 6000	Ø 28 (1.1)

	SPRINGS			
	Adj. pressure range bar (psi)	Pres. increase bar/turn (psi/turn)	Std. setting Q=5 (l/min.) bar (psi)	
Valve 1	30-80 (450-1160)	17 (247)	80 (1160)	Pilot opening with 100 bar (1450 psi) rod side
Valve 2	120-360 (1750-5200)	60 (870)	250 (3600)	
Valve 3	120-360 (1750-5200)	60 (870)	250 (3600)	

Pressure setting up to 410 bar: code on request.

Tamper resistant cap
ordering code 11.04.30.001
Mat. no. R930005194

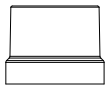

Preferred types

Type	Material number
070670300000V0B	R930052048

Type	Material number

Dimensions

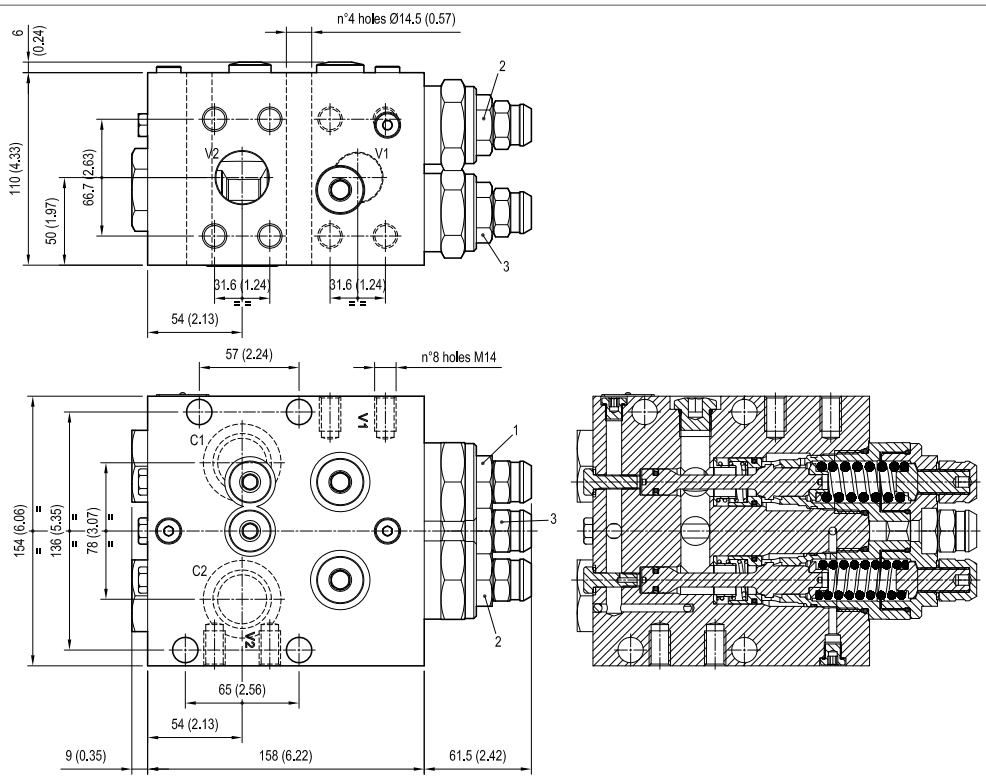

Load holding/motion control

Valves for motors: dual cross over relief

Designation	Description	Ports	Code	Data sheet	Page
Dual cross over relief, direct acting	VSDI-30	G 3/8, G 1/2	051603XYZ	18308-15	189
Dual cross over relief, direct acting OMP-OMR series	VSDI-30-FM	on SAUER-DANFOSS	051633XYZ	18308-16	191
Dual cross over relief, direct acting OMS series	VSDI-30-FM	on SAUER-DANFOSS	051617XYZ	18308-17	193
Dual cross over relief, direct acting with anti-cavitation check valve	VSDI-VA-30-FM	on SAUER-DANFOSS OMS series	051648XYZ	18308-18	195
Dual cross over relief, direct acting	VSDI-80	G 1/2, G 3/4	051601XYZ	18308-19	197
Dual cross over relief, direct acting with anti-cavitation check valve	VSDI-VA-80	G 1/2, G 3/4	051605XYZ	18308-20	199
Dual cross over relief, direct acting with anti-cavitation check valve	VSDI-VA-80-FM	on REXROTH motors A2FE-28-32 series	051615XYZ	18308-21	201
Dual cross over relief, pilot operated with anti-cavitation check valve	A-VAA-CC-150	G 1/2, G 3/4, G 1	088111XYZ	18308-24	203
Dual cross over relief, pilot operated with anti-cavitation check valve	A-VAA-CC-42-FM A2FE-45-56-63 series	on REXROTH motors	088116XYZ	18308-25	205

Dual cross over relief, direct acting

VSDI-30

05.16.03 - X - Y - Z

Description

It relieves the inlet pressure from either one of the supply lines and it protects motors or hydraulic actuators from shocks or pressure surges induced by changes in direction or by sudden stops. The dual relief is of the cross over type, and exhausted oil is transferred to the other line (from V1 into V2 and vice-versa), without the necessity of a separate tank line: this feature also prevents cavitation when used in conjunction with closed centre directional valve.

Technical data

Operating pressure	up to 210 bar (3000 psi)
Max. flow	30 l/min. (8 gpm)
Weight	0.79 kg (1.74 lbs)
Manifold material	Aluminium
Note: aluminium bodies are often strong enough for operating pressures exceeding 210 bar (3000 psi), depending from the fatigue life expected in the specific application. If in doubt, consult our Service Network.	
For relief cartridge details, see RE 18318-23 (VS-30 041118X99Z)	
Each cartridge can be individually pressure set. For best protection, the valve should be fitted as close to the actuator as possible.	
Fluid	Mineral oil (HL, HLP) according DIN 51524
Fluid temperature range	-30 °C to 100 (-22 to 212 °F)
Viscosity range	10 to 500 mm^2/s (cSt)
Recommended degree of fluid contamination	Class 19/17/14 according to ISO 4406
Other technical data	see data sheet 18350-50

Note: for applications outside these parameters, please consult us.

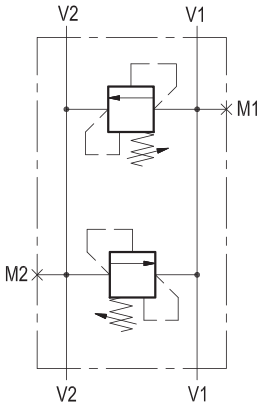

Characteristic curve

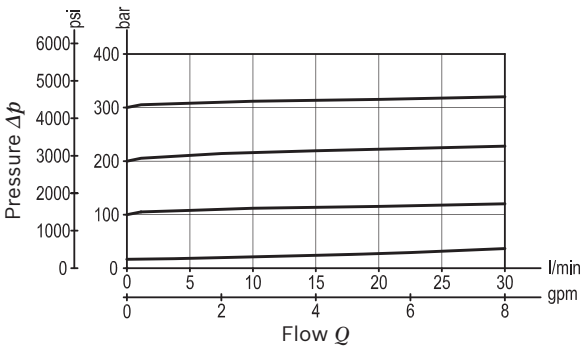

Dimensions [mm (inches)]

Ordering code

05.16.03	X	Y	Z

Dual cross over relief

Adjustments

03	Leakproof hex. socket screw

Port sizes	V1 - V2	M1 - M2	
02	G 3/8	G 1/8	
03	G 1/2	G 1/8	

	SPRINGS		
	Adj. pressure range bar (psi)	Pres. increase bar/turn (psi/turn)	Std. setting Q=5 (l/min) bar (psi)
05	5-50 (75-725)	12 (174)	50 (725)
10	30-100 (435-1450)	24 (348)	100 (1450)
20	50-210 (725-3000)	47 (682)	200 (2900)
35	100-350 (1450-5000)	82 (1189)	350 (5000)

Tamper resistant cap
ordering code 11.04.23.003
Mat. no. R930000754

Preferred types

Type	Material number
051603030205000	R930001351
051603030210000	R930001353
051603030220000	R930001354
051603030235000	R930001358

Type	Material number
051603030305000	R930001361
051603030310000	R930001362
051603030320000	R930001363
051603030335000	R930001365

Dimensions

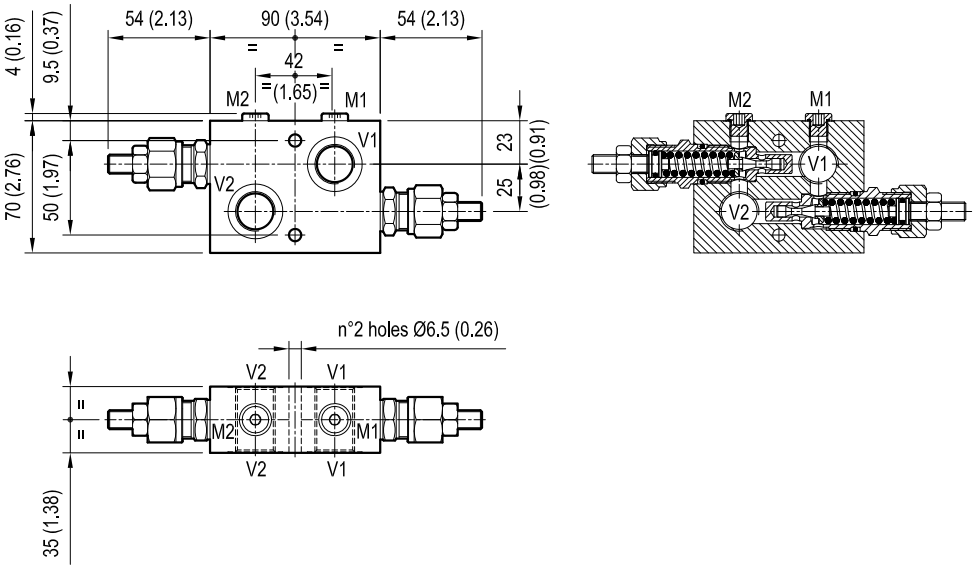

Dual cross over relief, direct acting, flangeable to motor

VSDI-30-FM

05.16.33 - X - Y - Z

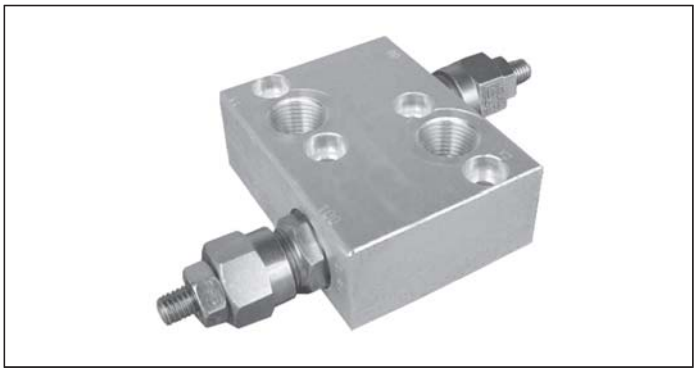

Description

It relieves the inlet pressure from either one of the supply lines and it protects the motor from shocks or pressure surges induced by changes in direction or by sudden stops. The dual relief is of the cross over type, and exhausted oil is transferred to the other line (from V1 into V2 and vice-versa), without the necessity of a separate tank line: this feature also prevents cavitation when used in conjunction with closed centre directional valve.

Technical data

Operating pressure	up to 210 bar (3000 psi)
Max. flow	30 l/min. (8 gpm)
Weight	0.7 kg (1.54 lbs)
Manifold material	Aluminium
Note: aluminium bodies are often strong enough for operating pressures exceeding 210 bar (3000 psi), depending from the fatigue life expected in the specific application. If in doubt, consult our Service Network.	
Flange seal kit [1]	E00000000000058 (R930060588)
Flangeable on SAUER-DANFOSS orbital motors OMP-OMR series	
For relief cartridge details, see RE 18318-23 (VS-30 041118X99Z)	
Each cartridge can be individually pressure set.	
Fluid	Mineral oil (HL, HLP) according DIN 51524
Fluid temperature range	-30 °C to 100 (-22 to 212 °F)
Viscosity range	10 to 500 mm^2/s (cSt)
Recommended degree of fluid contamination	Class 19/17/14 according to ISO 4406
Other technical data	see data sheet 18350-50

Note: for applications outside these parameters, please consult us.

[1] Seals for 10 valves

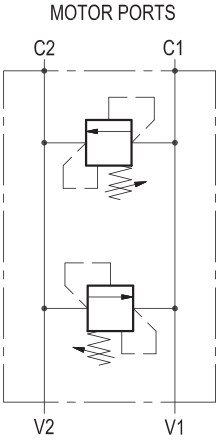

Characteristic curve

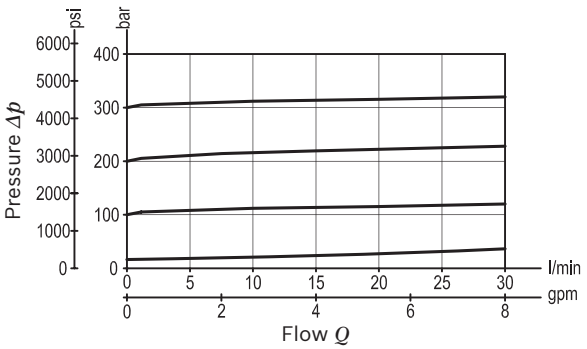

Dimensions [mm (inches)]

Ordering code

05.16.33	X	Y	Z

Dual cross over relief, direct acting flangeable to motor

Adjustments

03	Leakproof hex. socket screw

	SPRINGS		
	Adj. pressure range bar (psi)	Pres. increase bar/turn (psi/turn)	Std. setting Q=5 (l/min) bar (psi)
20	50-210 (725-3000)	47 (682)	200 (2900)

Tamper resistant cap
ordeting code 11.04.23.003
Mat. no. R930000754

Port sizes	V1 - V2	C1 - C2	
03	G 1/2	Ø 13 (0.51)	

Preferred types

Type	Material number
051633030320000	R930001388

Type	Material number

Dimensions

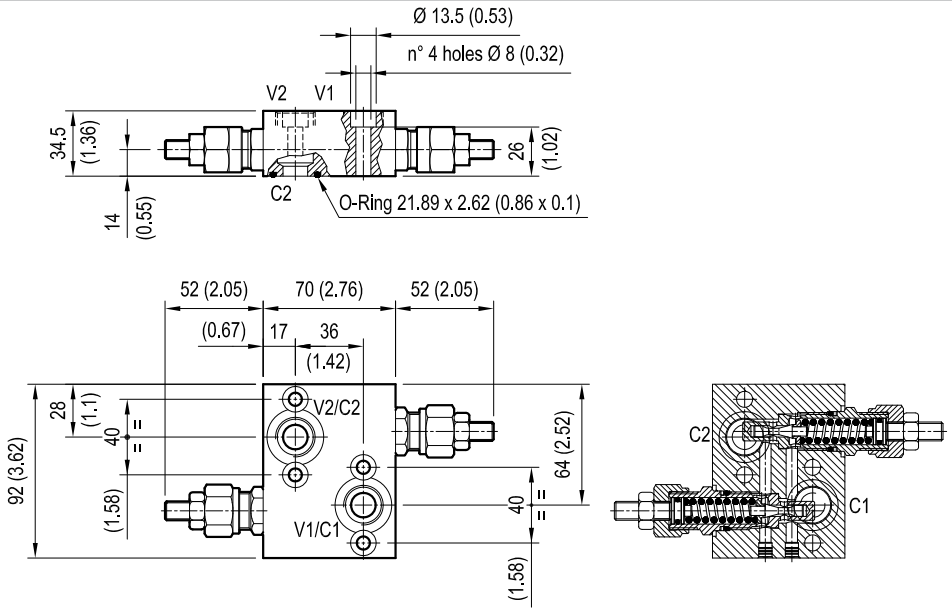

Dual cross over relief, direct acting, flangeable to motor

VSDI-30-FM

05.16.17 - X - Y - Z

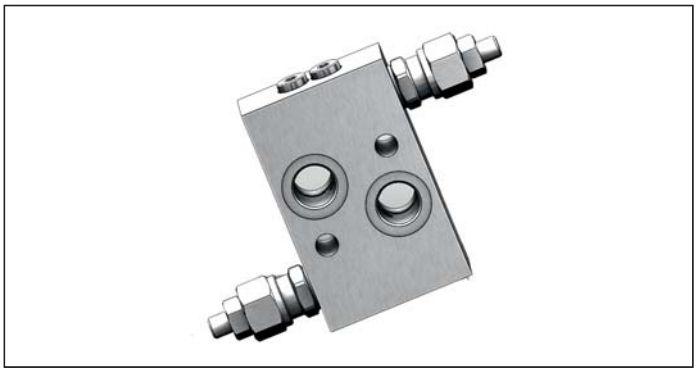

Description

It relieves the inlet pressure from either one of the supply lines and it protects the motor from shocks or pressure surges induced by changes in direction or by sudden stops. The dual relief is of the cross over type, and exhausted oil is transferred to the other line (from V1 into V2 and vice-versa), without the necessity of a separate tank line: this feature also prevents cavitation when used in conjunction with closed centre directional valve.

Technical data

Operating pressure	up to 210 bar (3000 psi)
Max. flow	30 l/min. (8 gpm)
Weight	0.9 kg (1.98 lbs)
Manifold material	Aluminium
Note: aluminium bodies are often strong enough for operating pressures exceeding 210 bar (3000 psi), depending from the fatigue life expected in the specific application. If in doubt, consult our Service Network.	
Flange seal kit [1]	E00000000000032 (R930005697)
Flangeable on SAUER-DANFOSS orbital motors OMS series	
For relief cartridge details, see RE 18318-23 (VS-30 041118X99Z)	
Each cartridge can be individually pressure set.	
Fluid	Mineral oil (HL, HLP) according DIN 51524
Fluid temperature range	-30 °C to 100 (-22 to 212 °F)
Viscosity range	10 to 500 mm^2/s (cSt)
Recommended degree of fluid contamination	Class 19/17/14 according to ISO 4406
Other technical data	see data sheet 18350-50

Note: for applications outside these parameters, please consult us.

[1] Seal for 10 valves

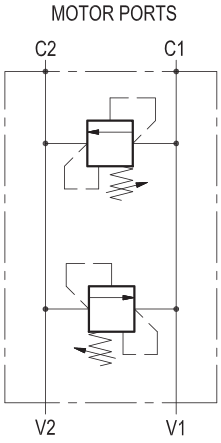

Characteristic curve

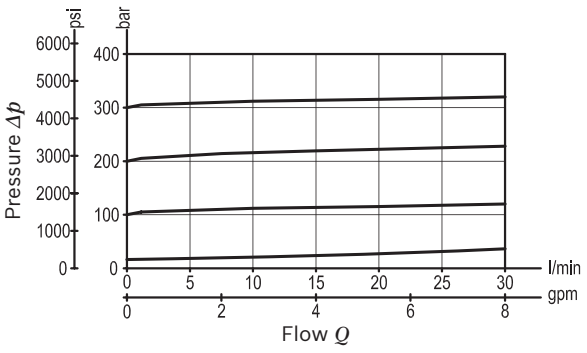

Dimensions [mm (inches)]

Ordering code

05.16.17	X	Y	Z

Dual cross over relief, direct acting flangeable to motor

Adjustments

03	Leakproof hex. socket screw

	SPRINGS		
	Adj. pressure range bar (psi)	Pres. increase bar/turn (psi/turn)	Std. setting Q=5 (l/min) bar (psi)
20	50-210 (725-3000)	47 (682)	200 (2900)

Tamper resistant cap
ordering code 11.04.23.003
Mat. no. R930000754

Port sizes	V1 - V2	C1 - C2	
03	G 1/2	Ø 19 (0.75)	

Preferred types

Type	Material number
05161703032000A	R930008288

Type	Material number

Dimensions

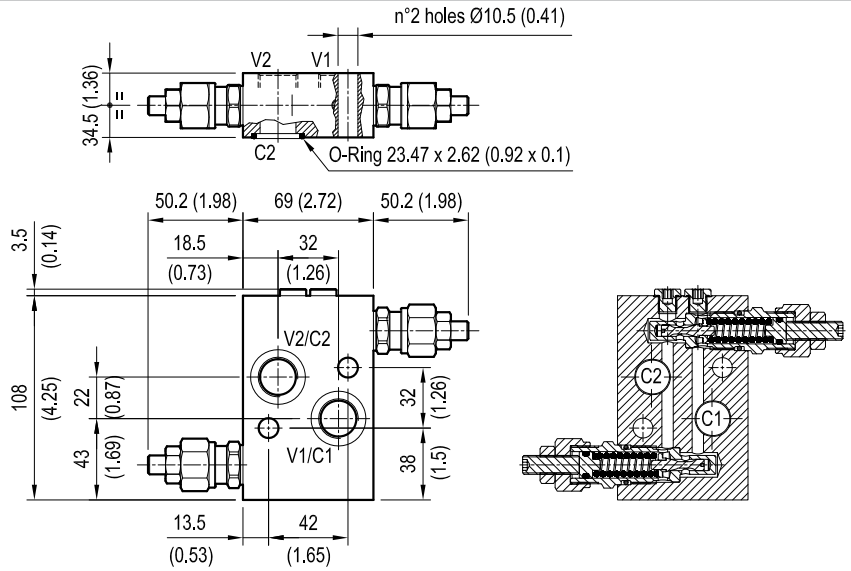

Dual cross over relief, with anti-cavitation check valves, flangeable to motor

VSDI-VA-30-FM

05.16.48 - X - Y - Z

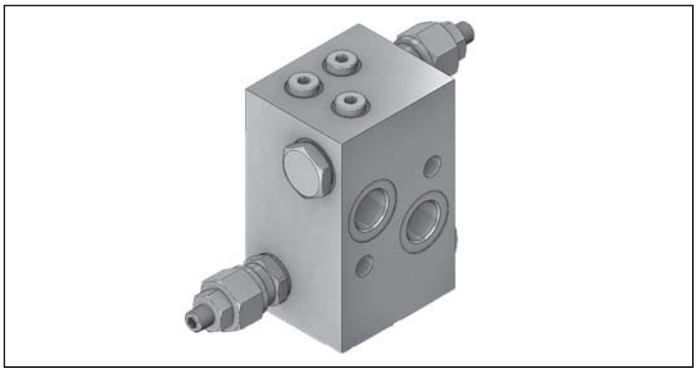

Description

It relieves the inlet pressure from either one of the supply lines and it protects the motor from shocks or pressure surges induced by changes in direction or by sudden stops. The dual relief is of the cross over type, and exhausted oil is transferred to the other line (from V1 into V2 and vice-versa) to prevent cavitation. An extra tank port (T), with 2 checks, allows to make up for any drain or exhausted flow and ensures that the motor is always full.

Technical data

Operating pressure	up to 210 bar (3000 psi)
Max. flow	30 l/min. (8 gpm)
Weight	1.9 kg (4.2 lbs)
Manifold material	Aluminium
Note: aluminium bodies are often strong enough for operating pressures exceeding 210 bar (3000 psi), depending from the fatigue life expected in the specific application. If in doubt, consult our Service Network.	
Flange seal kit [1]	E00000000000032 (R930005697)
Flangeable on SAUER-DANFOSS orbital motors OMS series	
For relief cartridge details, see RE 18318-23 (VS-30 041118X99Z)	
Each cartridge can be individually pressure set.	
Fluid	Mineral oil (HL, HLP) according DIN 51524
Fluid temperature range	-30 °C to 100 (-22 to 212 °F)
Viscosity range	10 to 500 mm^2/s (cSt)
Recommended degree of fluid contamination	Class 19/17/14 according to ISO 4406
Other technical data	see data sheet 18350-50

Note: for applications outside these parameters, please consult us.

[1] Seal for 10 valves

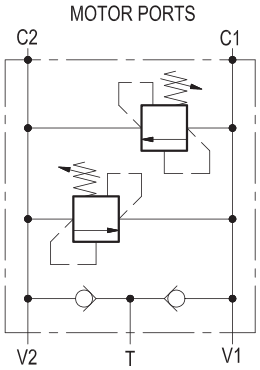

Characteristic curve

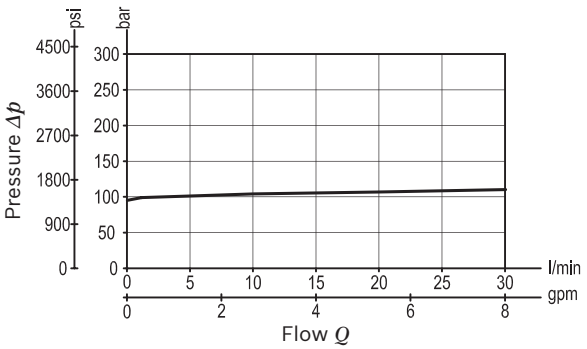

RE 18300-18/03.2013 Bosch Rexroth AG Control Valves

Ordering code

05.16.48	X	Y	Z

Dual cross over relief,
with anti-cavitation check valves
flangeable to motor

Adjustments

03	Leakproof hex. socket screw

	SPRINGS		
	Adj. pressure range bar (psi)	Pres. increase bar/turn (psi/turn)	Std. setting Q=5 (l/min) bar (psi)
20	50-210 (725-3000)	47 (682)	200 (2900)

Tamper resistant cap
ordering code 11.04.23.003
Mat. no. R930000754

Port sizes	V1 - V2 - T	C1 - C2	
03	G 1/2	Ø 19 (0.75)	

Preferred types

Type	Material number
051648030320000	R930001140

Type	Material number

Dimensions

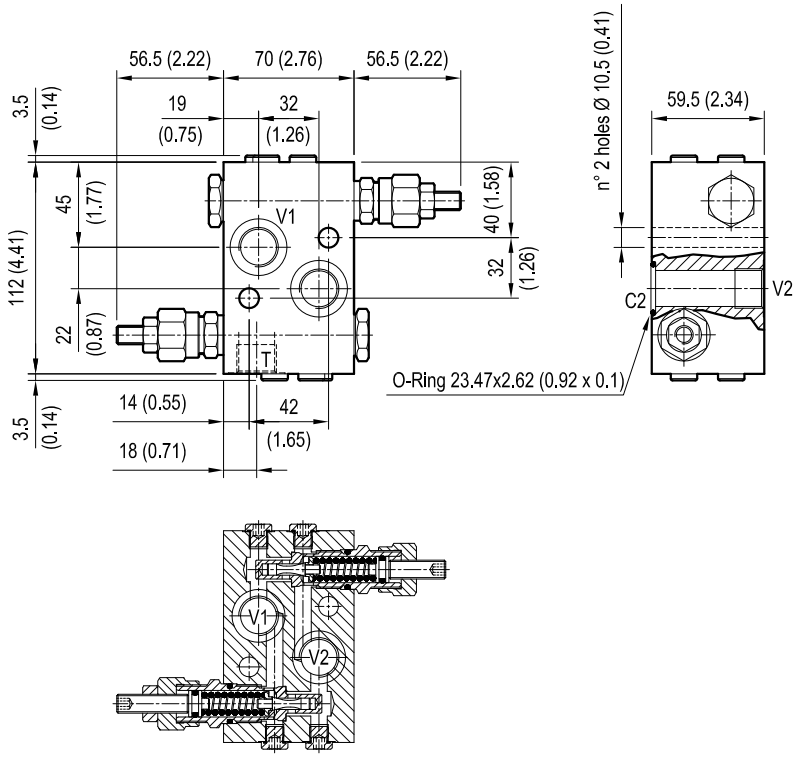

Dual cross over relief, direct acting

VSDI-80

05.16.01 - X - Y - Z

Description

It relieves the inlet pressure from either one of the supply lines and it protects motors or hydraulic actuators from shocks or pressure surges induced by changes in direction or by sudden stops. The dual relief is of the cross over type, and exhausted oil is transferred to the other line (from V1 into V2 and vice-versa), without the necessity of a separate tank line: this feature also prevents cavitation when used in conjunction with closed centre directional valve.

Technical data

Operating pressure	up to 210 bar (3000 psi)
Max. flow	80 l/min. (21 gpm)
Weight	1.63 kg (3.6 lbs)
Manifold material	Aluminium
Note: aluminium bodies are often strong enough for operating pressures exceeding 210 bar (3000 psi), depending from the fatigue life expected in the specific application. If in doubt, consult our Service Network.	
For relief cartridge details, see RE 18318-25 (VS-80 041105X99Z)	
Each cartridge can be individually pressure set. For best protection, the valve should be fitted as close to the actuator as possible.	
Fluid	Mineral oil (HL, HLP) according DIN 51524
Fluid temperature range	-30 °C to 100 (-22 to 212 °F)
Viscosity range	10 to 500 mm^2/s (cSt)
Recommended degree of fluid contamination	Class 19/17/14 according to ISO 4406
Other technical data	see data sheet 18350-50

Note: for applications outside these parameters, please consult us.

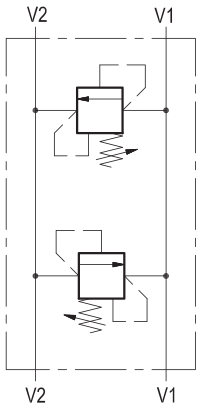

Characteristic curve

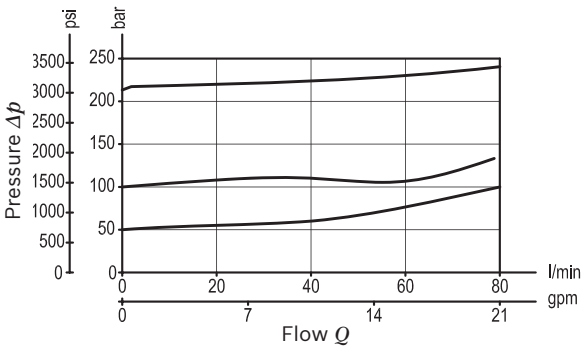

Dimensions [mm (inches)]

Ordering code

05.16.01	X	Y	Z

Dual cross over relief, direct acting

Adjustments

03	Leakproof hex. socket screw

Port sizes	V1 - V2		
03	G 1/2		
04	G 3/4		

	SPRINGS		
	Adj. pressure range bar (psi)	Pres. increase bar/turn (psi/turn)	Std. setting Q=5 (l/min) bar (psi)
10	30-100 (435-1450)	12 (174)	100 (1450)
20	80-250 (1160-3600)	27 (392)	200 (2900)

Tamper resistant cap
ordering code 11.04.23.003
Mat. no. R930000754

Preferred types

Type	Material number
051601030310000	R930001348
051601030320000	R930001349

Type	Material number
051601030410000	R930001959
051601030420000	R930001350

Dimensions

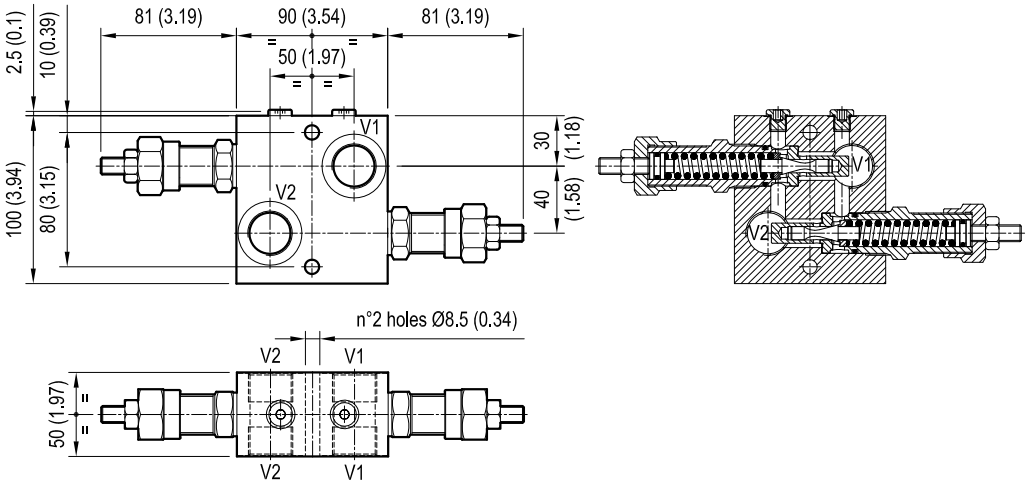

Dual cross over relief, direct acting with anti-cavitation check valves

VSDI-VA-80

05.16.05 - X - Y - Z

Description

It relieves the inlet pressure from either one of the supply lines and it protects motors or hydraulic actuators from shocks or pressure surges induced by changes in direction or by sudden stops. The dual relief is of the cross over type, and exhausted oil is transferred to the other line (from V1 into V2 and vice-versa) to prevent cavitation. An extra tank port (T), with 2 checks, allows to make up for any drain or exhausted flow and ensures that the motor is always full.

Technical data

Operating pressure	up to 210 bar (3000 psi)
Max. flow	80 l/min. (21 gpm)
Weight	2.4 kg (5.3 lbs)
Manifold material	Aluminium
Note: aluminium bodies are often strong enough for operating pressures exceeding 210 bar (3000 psi), depending from the fatigue life expected in the specific application. If in doubt, consult our Service Network.	
For relief cartridge details, see RE 18318-25 (VS-80 041105X99Z)	
Each cartridge can be individually pressure set. For best protection, the valve should be fitted as close to the actuator as possible.	
Fluid	Mineral oil (HL, HLP) according DIN 51524
Fluid temperature range	-30 °C to 100 (-22 to 212 °F)
Viscosity range	10 to 500 mm^2/s (cSt)
Recommended degree of fluid contamination	Class 19/17/14 according to ISO 4406
Other technical data	see data sheet 18350-50

Note: for applications outside these parameters, please consult us.

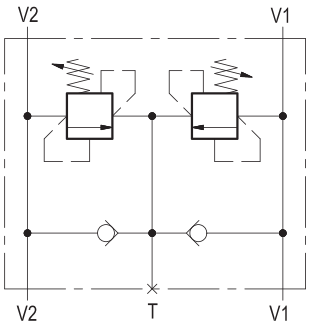

Characteristic curve

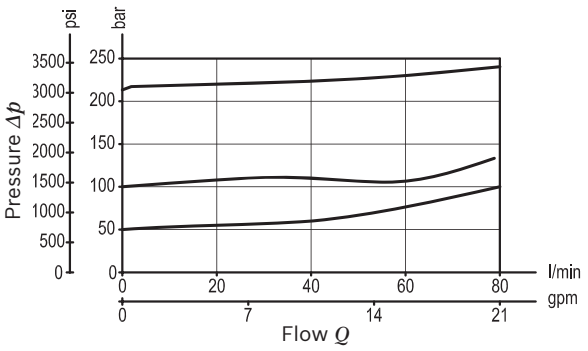

Dimensions [mm (inches)]

Ordering code

05.16.05	X	Y	Z

Dual cross over relief, direct acting with anti-cavitation check valves

Adjustments

03	Leakproof hex. socket screw

Port sizes	V1 - V2		
03	G 1/2		
04	G 3/4		

	SPRINGS		
	Adj. pressure range bar (psi)	Pres. increase bar/turn (psi/turn)	Std. setting Q=5 (l/min) bar (psi)
10	30-100 (435-1450)	12 (174)	100 (1450)
20	80-250 (1160-3600)	27 (392)	200 (2900)

Tamper resistant cap
ordering code 11.04.23.003
Mat. no. R930000754

Preferred types

Type	Material number
051605030310000	R930001368
051605030320000	R930001369

Type	Material number
051605030410000	R930001960
051605030420000	R930001370

Dimensions

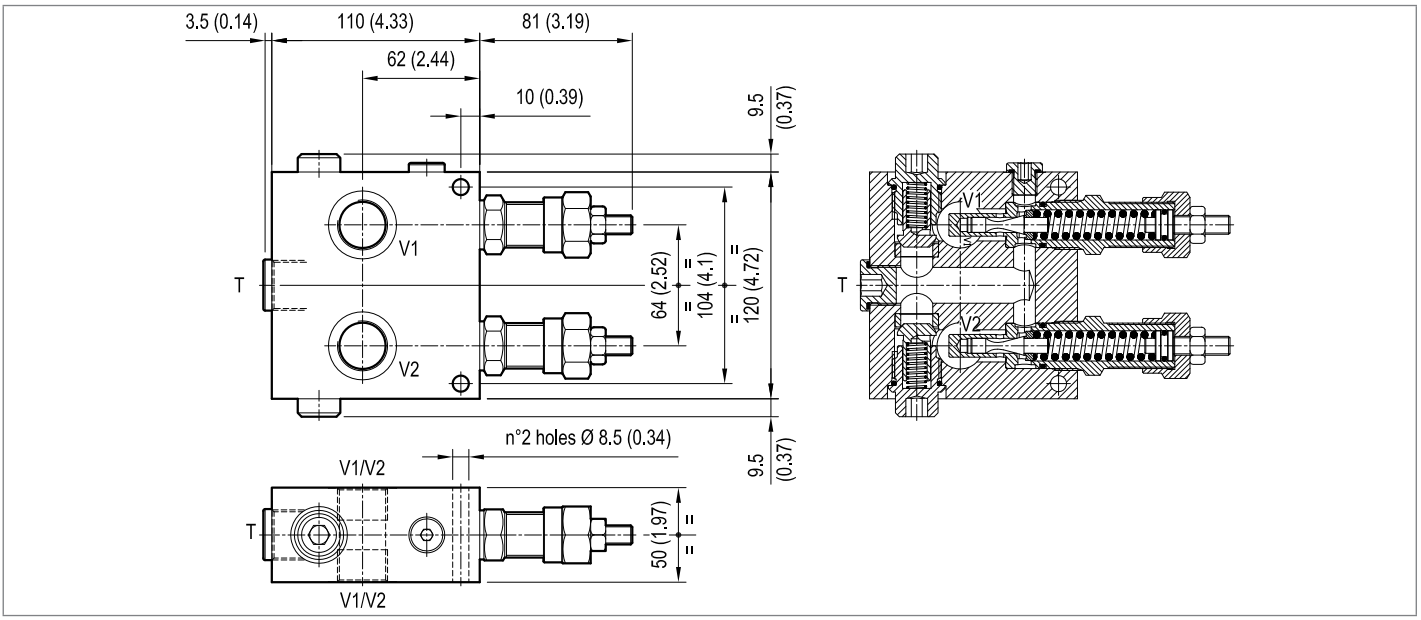

Dual cross over relief, direct acting, with anti-cavitation check valves, flangeable to motor

VSDI-VA-80-FM

05.16.15 - X - Y - Z

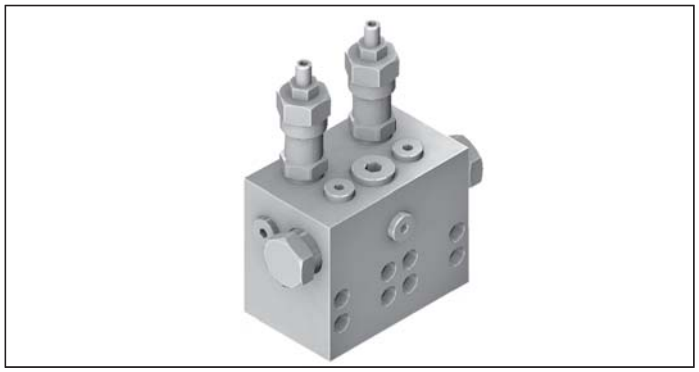

Description

It relieves the inlet pressure from either one of the supply lines and it protects the motor from shocks or pressure surges induced by changes in direction or by sudden stops. The dual relief is of the cross over type, and exhausted oil is transferred to the other line (from V1 into V2 and vice-versa) to prevent cavitation. An extra tank port (T), with 2 checks, allows to make up for any drain or exhausted flow and ensures that the motor is always full.

Technical data

Operating pressure	up to 210 bar (3000 psi)
Max. flow	80 l/min. (21 gpm)
Weight	3.1 kg (6.8 lbs)
Manifold material	Aluminium
Note: aluminium bodies are often strong enough for operating pressures exceeding 210 bar (3000 psi), depending from the fatigue life expected in the specific application. If in doubt, consult our Service Network.	
Flange seal kit [1]	E00000000000020 (R930000144)
Flangeable on REXROTH motors A2FE-28-32 series	
For relief cartridge details, see RE 18318-25 (VS-80 041105X99Z)	
Each cartridge can be individually pressure set.	
Fluid	Mineral oil (HL, HLP) according DIN 51524
Fluid temperature range	-30 °C to 100 (-22 to 212 °F)
Viscosity range	10 to 500 mm^2/s (cSt)
Recommended degree of fluid contamination	Class 19/17/14 according to ISO 4406
Other technical data	see data sheet 18350-50

Note: for applications outside these parameters, please consult us.

[1] Seal for 5 valves

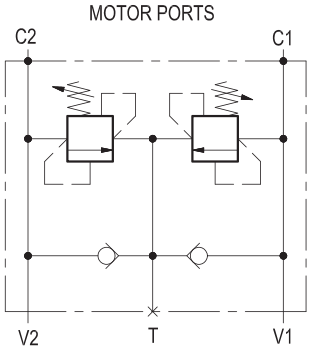

Characteristic curve

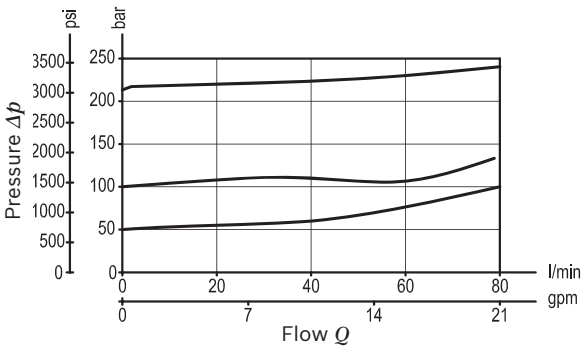

Dimensions [mm (inches)]

Ordering code

05.16.15	X	Y	Z

Dual cross over relief, direct acting, with anti-cavitation check valves flangeable to motor

Adjustments

03	Leakproof hex. socket screw

	SPRINGS		
	Adj. pressure range bar (psi)	Pres. increase bar/turn (psi/turn)	Std. setting Q=5 (l/min) bar (psi)
20	80-250 (1160-3600)	27 (392)	200 (2900)

Tamper resistant cap
ordering code 11.04.23.003
Mat. no. R930000754

Port sizes	V1 - V2	C1 - C2	T
03	G 1/2	Ø 15 (0.59)	G 1/2

Preferred types

Type	Material number
05161503032000A	R930001377

Type	Material number

Dimensions

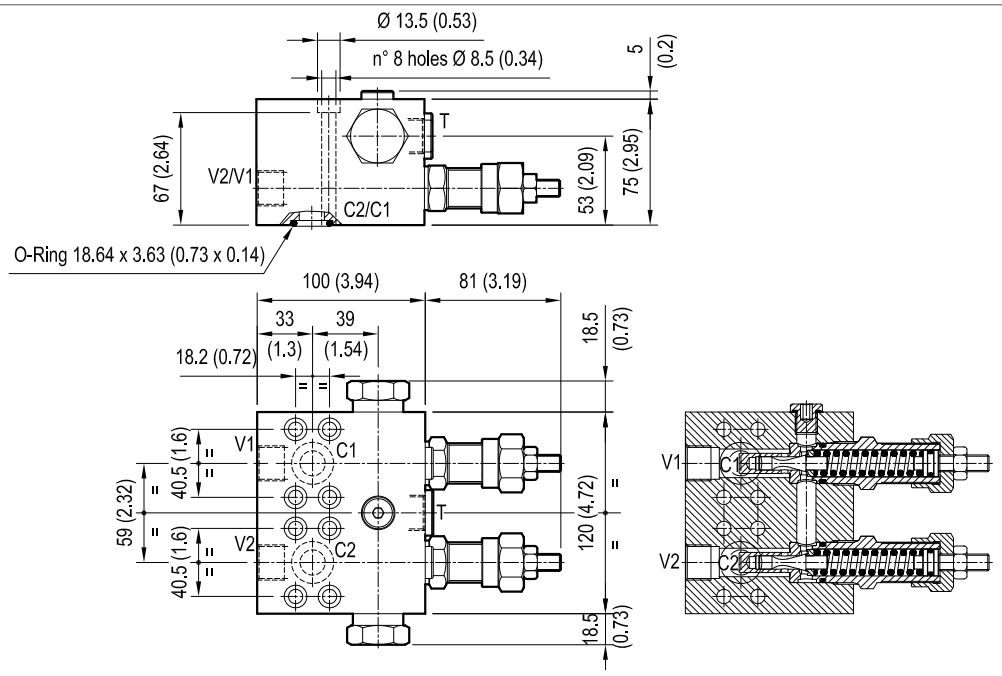

Dual cross over relief, pilot operated with anti-cavitation check valves

A-VAA-CC-150

08.81.11 - X - Y - Z

Technical data

Max. operating pressure	350 bar (5000 psi)
Max. flow	150 l/min. (40 gpm)
Leakage at max. relief setting	0.10 l/min. (0.03 gpm)
Weight	see “Dimensions”
Manifold material	Zinc plated steel
The pilot operated relief cartridge provides very “flat” curves up to the max flow.	
For best protection, the valve should be fitted as close to the actuator as possible.	
Fluid	Mineral oil (HL, HLP) according DIN 51524
Fluid temperature range	-30 °C to 100 (-22 to 212 °F)
Viscosity range	10 to 500 mm^2/s (cSt)
Recommended degree of fluid contamination	Class 19/17/14 according to ISO 4406
Other technical data	see data sheet 18350-50

Note: for applications outside these parameters, please consult us.

Description

It relieves the inlet pressure from either one of the supply lines and it protects motors or hydraulic actuators from shocks or pressure surges induced by changes in direction or by sudden stops. The relief is of the cross over type, and exhausted oil is transferred through the check valve to the low pressure line (from V1 into V2, or vice-versa) to prevent cavitation. An extra tank port (T), with 2 additional checks, allows to make up for any drain or exhausted flow and ensures that the motor is always full.

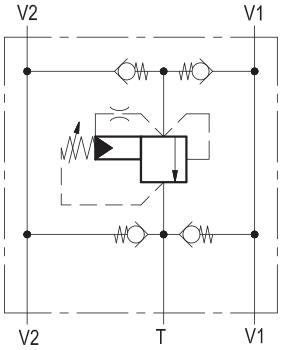

Characteristic curve

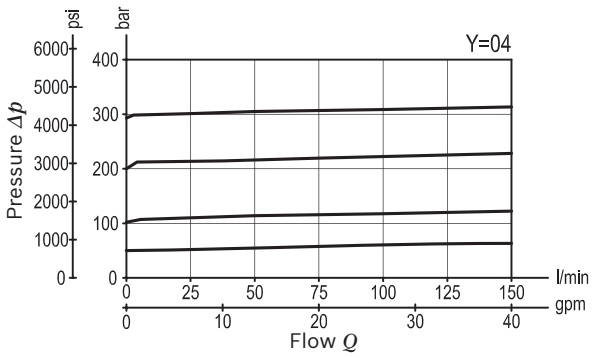

Ordering code

08.81.11	X	Y	Z

Dual cross over relief, pilot operated with anti-cavitation check valves

Adjustments

03 Leakproof hex. socket screw

Port sizes	P	T	
03	G 1/2	G 1/2	
04	G 3/4	G 3/4	
05	G 1	G 1	

	SPRINGS		
	Adj. pressure range bar (psi)	Pres. increase bar/turn (psi/turn)	Std. setting Q=5 (l/min) bar (psi)
40	35-420 (500-6000)	115 (1668)	350 (5000)

Tamper resistant cap
ordering code 11.04.23.004
Mat. no . R930001411

Preferred types

Type	Material number
088111030340000	R930004103
088111030440000	R930004104

Type	Material number
088111030540000	R930004106

Dimensions

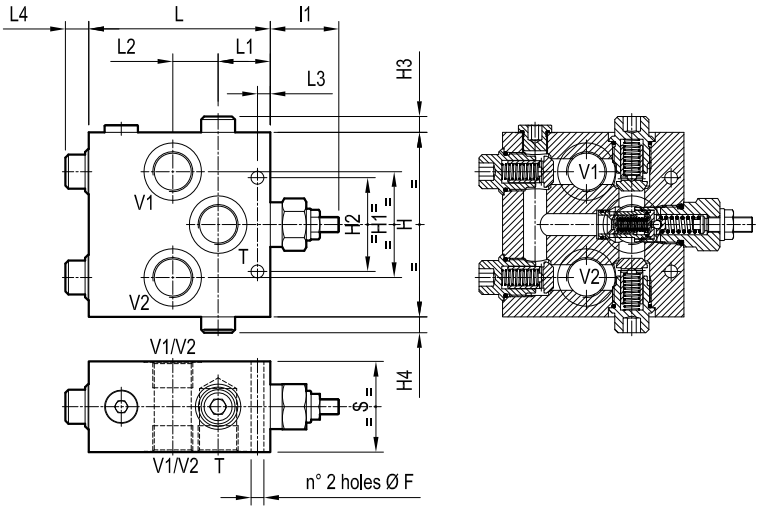

59.5 (2.34)	15.5 (0.61)	7 (0.28)	40 (1.57)	34 (1.34)	134 (5.28)	45.5 (1.79)	9 (0.35)	9 (0.35)	72 (2.83)	80 (3.15)	146 (5.75)	8.5 (0.33)			G 1	7.7 (17)
60 (2.36)	15.5 (0.61)	8.5 (0.33)	30 (1.18)	34.5 (1.36)	120 (4.72)	45.5 (1.79)	10.5 (0.41)	10.5 (0.41)	62 (2.44)	70 (2.76)	122 (4.8)	8.5 (0.33)			G 3/4	6.1 (13.4)
50 (1.97)	15.5 (0.61)	8 (0.31)	23.5 (0.93)	33 (1.3)	95 (3.74)	45.5 (1.79)	10.5 (0.41)	10.5 (0.41)	50 (1.97)	52 (2.05)	90 (3.54)	8.5 (0.33)			G 1/2	3 (6.6)
S	L4	L3	L2	L1	L	I1	H4	H3	H2	H1	H	F			Y	Weight kg (lbs)

Dual cross over relief, pilot operated, with anti-cavitation check valves, flangeable to motor

A-VAA-CC-42-FM

08.81.16 - X - Y - Z

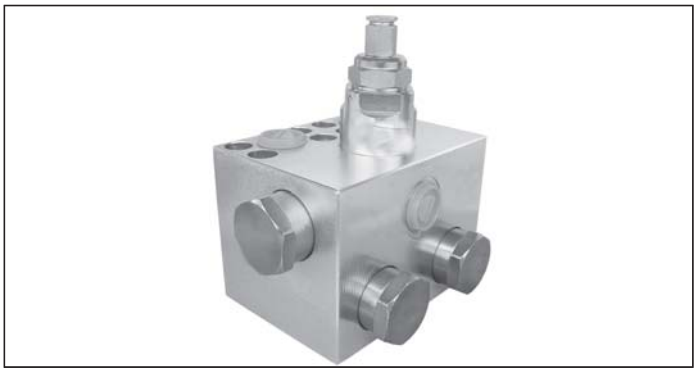

Description

It relieves the inlet pressure from either one of the supply lines and it protects motors or hydraulic actuators from shocks or pressure surges induced by changes in direction or by sudden stops. The relief is of the cross over type, and exhausted oil is transferred through the check valve to the low pressure line (from V1 into V2, or vice-versa) to prevent cavitation. An extra tank port (T), with 2 additional checks, allows to make up for any drain or exhausted flow and ensures that the motor is always full.

Technical data

Max. operating pressure	350 bar (5000 psi)
Max. flow	200 l/min. (53 gpm)
Weight	11.8 kg (26 lbs)
Manifold material	Zinc plated steel
Flange seal kit [1)]	E00000000000002 (R930004532)
Flangeable on REXROTH motors A2FE 45-56-63 series	
The direct acting relief cartridge has hydraulic damping and provides enhanced stability at all flows and pressures	
Fluid	Mineral oil (HL, HLP) according DIN 51524
Fluid temperature range	-30 °C to 100 (-22 to 212 °F)
Viscosity range	10 to 500 mm^2/s (cSt)
Recommended degree of fluid contamination	Class 19/17/14 according to ISO 4406
Other technical data	see data sheet 18350-50

Note: for applications outside these parameters, please consult us.

[1)] Seals for 5 valves.

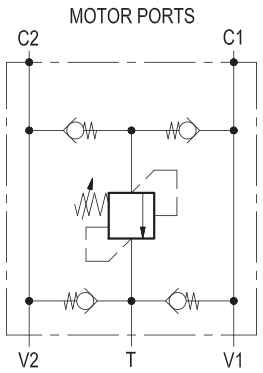

Characteristic curve

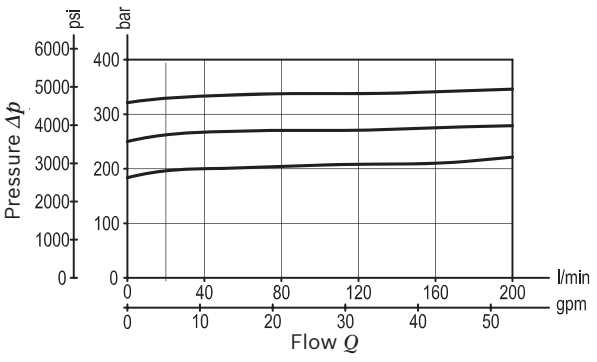

Dimensions [mm (inches)]

Ordering code

08.81.16	X	Y	Z

Dual cross over relief, pilot operated, with anti-cavitation check valves flangeable to motor

Adjustments

03	Leakproof hex. socket screw

	SPRINGS		
	Adj. pressure range bar (psi)	Pres. increase bar/turn (psi/turn)	Std. setting Q=5 (l/min) bar (psi)
35	70-350 (1000-5000)	65 (943)	300 (4350)

Port sizes	V1 - V2 - T	C1 - C2	
04	G 3/4	Ø 18.5 (0.73)	

Preferred types

Type	Material number
088116030435000	R930005838

Type	Material number

Dimensions

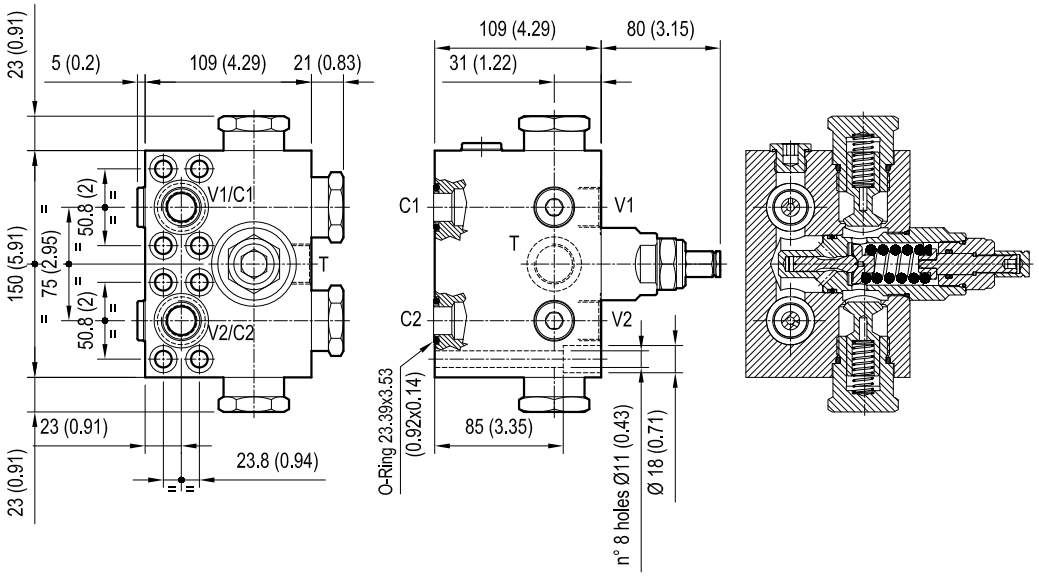

Load holding/motion control

Valves for motors: single counterbalance with brake release port

Designation	Description	Ports	Code	Data sheet	Page
Single counterbalance with brake release port for winches	A-VBSO-SE-LA-33	G 1/2, G 3/4	083769XYZ	18308-35	209
Single counterbalance with brake release port for winches	A-VBSO-SE-LA-42	G 3/4, G 1	083770XYZ	18308-36	211
Single counterbalance with brake release port for winches	VBSO-SE-FA-30	on SAUER-DANFOSS OMP-OMR series	054570XYZ	18308-37	213
Single counterbalance with brake release port for winches	VBSO-SE-FA-30	on SAUER-DANFOSS OMS series	054571XYZ	18308-38	215
Single counterbalance with brake release port for winches, flangeable to motor	VBSO-SE-FA-33	on REXROTH motors A2FE 45-56-63 series	054981XYZ	18308-39	217
Single counterbalance with brake release port for winches	VBSO-SE-FA-RD-30	on SAUER-DANFOSS OMP-OMR series	054524XYZ	18308-40	219
Single counterbalance with brake release port for winches, flangeable to motor	VBSO-SE-FA-RD-90	on SAUER-DANFOSS OMS-OMSW-OMSS series	053501XYZ	18308-41	221
Single counterbalance with brake release port for winches	A-VBSO-SE-FA-42	SAE 6000	084538XYZ	18308-42	223
Single counterbalance with brake release port for winches	A-VBSO-SE-FA-42	SAE 6000	084539XYZ	18308-43	225

Single counterbalance with brake release port for winches

A-VBSO-SE-LA-33

08.37.69 - X - Y - Z

Technical data

Max. operating pressure	410 bar (5945 psi)
Max. flow	150 l/min. (40 gpm)
The high pilot ratio (13:1) has been developed for energy saving; for higher stability at all flows and pressures, the pilot line includes hydraulic damping.	
Relief setting: at least 1.3 times the highest expected load. In addition, both the relief setting and the pilot ratio must be determined also in order to achieve building-up of pilot pressure in Pil high enough to release the brake prior to any valve opening from C2 to V2.	
Weight	see “Dimensions”
Manifold material	Zinc plated steel
Fluid	Mineral oil (HL, HLP) according DIN 51524
Fluid temperature range	-30 °C to 100 (-22 to 212 °F)
Viscosity range	10 to 500 mm^2/s (cSt)
Recommended degree of fluid contamination	Class 19/17/14 according to ISO 4406
MTTFd	150 years see data sheet 18350-51
Other technical data	see data sheet 18350-50

Note: for applications outside these parameters, please consult us.

Description

When pressure at V2 rises above the spring bias pressure, the check seat is pushed away from the piston and flow is allowed from V2 to C2. When load pressure at C2 rises above the pressure setting, the direct operated, differential area, relief function is activated and flow is relieved from C2 to V2. With pilot pressure at Pil, the pressure setting is reduced in proportion to the stated ratio of the valve, until opening and allowing flow from C2 to V2. The spring chamber is drained to V2, and any back-pressure at V2 is additive to the pressure setting in all functions. Through port C3, an incorporated shuttle valve directs either Pil or V2 line pressure to the spring actuated brake for brake opening.

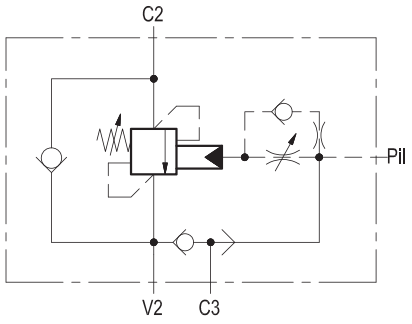

Characteristic curve

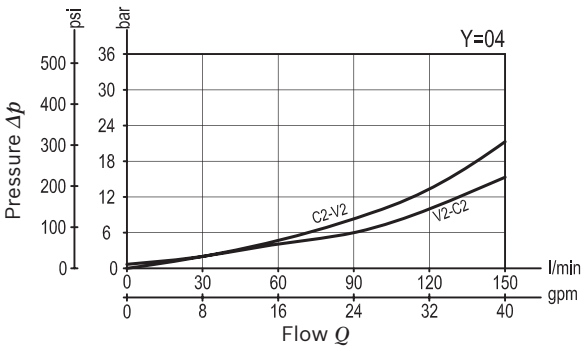

Dimensions [mm (inches)]

Ordering code

08.37.69	X	Y	Z

Single counterbalance
with brake release port for winches

Pilot ratio

13	13:1

Port sizes	V1 - V2	C3 - Pil	
03	G 1/2	G 1/4	
04	G 3/4	G 1/4	

	SPRINGS		
	Adj. pressure range bar (psi)	Pres. increase bar/turn (psi/turn)	Std. setting Q=5 (l/min) bar (psi)
35	300-500 (4350-7250)	200 (2900)	500 (7250)

Pressure setting up to 410 bar: code on request.

Tamper resistant cap
ordering code 11.04.30.001
Mat. no. R930005194

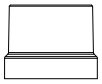

Preferred types

Type	Material number
08376913033500A	R930007138
08376913043500A	R930007152

Type	Material number

Dimensions

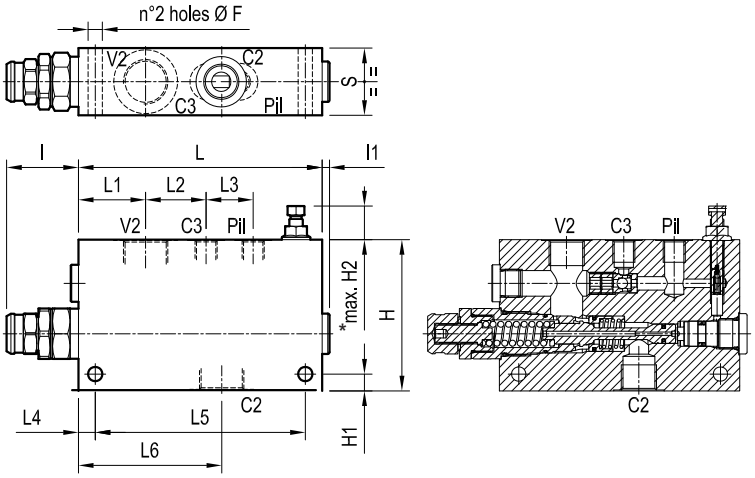

40 (1.58)	83 (3.27)	125 (4.92)	10 (0.39)	28 (1.1)	36 (1.42)	40 (1.58)	143 (5.63)	20 (0.79)	10 (0.39)	90 (3.54)	4.5 (0.18)	43 (1.69)	8.5 (0.34)			G 3/4	3.6 (7.9)
40 (1.58)	83 (3.27)	125 (4.92)	10 (0.39)	30 (1.18)	34 (1.34)	40 (1.58)	143 (5.63)	19 (0.75)	10 (0.39)	90 (3.54)	4.5 (0.18)	43 (1.69)	8.5 (0.34)			G 1/2	3.6 (7.9)
S	L6	L5	L4	L3	L2	L1	L	H2	H1	H	I1	I	F			Y	Weight kg (lbs)

* The adjusting screw can be completely unscrewed. Do not exceed the indicated protrusion range of the adjusted screw.

Single counterbalance with brake release port for winches

A-VBSO-SE-LA-42

08.37.70 - X - Y - Z

Technical data

Max. operating pressure	410 bar (5945 psi)
Max. flow	up to 350 l/min. (93 gpm)
The high pilot ratio (13:1) has been developed for energy saving; for higher stability at all flows and pressures, the pilot line includes hydraulic damping.	
Relief setting: at least 1.3 times the highest expected load. In addition, both the relief setting and the pilot ratio must be determined also in order to achieve building-up of pilot pressure in Pil high enough to release the brake prior to any valve opening from C2 to V2.	
Weight	see “Dimensions”
Manifold material	Zinc plated steel
Fluid	Mineral oil (HL, HLP) according DIN 51524
Fluid temperature range	-30 °C to 100 (-22 to 212 °F)
Viscosity range	10 to 500 mm^2/s (cSt)
Recommended degree of fluid contamination	Class 19/17/14 according to ISO 4406
Other technical data	see data sheet 18350-50

Note: for applications outside these parameters, please consult us.

Description

When pressure at V2 rises above the spring bias pressure, the check seat is pushed away from the piston and flow is allowed from V2 to C2. When load pressure at C2 rises above the pressure setting, the direct operated, differential area, relief function is activated and flow is relieved from C2 to V2. With pilot pressure at Pil, the pressure setting is reduced in proportion to the stated ratio of the valve, until opening and allowing flow from C2 to V2. The spring chamber is drained to V2, and any back-pressure at V2 is additive to the pressure setting in all functions. Through port C3, an incorporated shuttle valve directs either Pil or V2 line pressure to the spring actuated brake for brake opening.

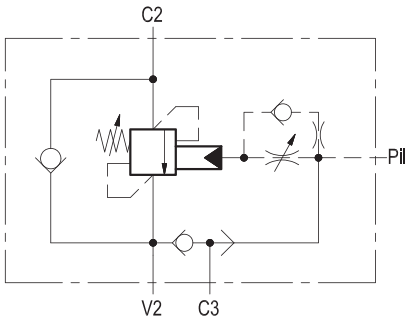

Characteristic curve

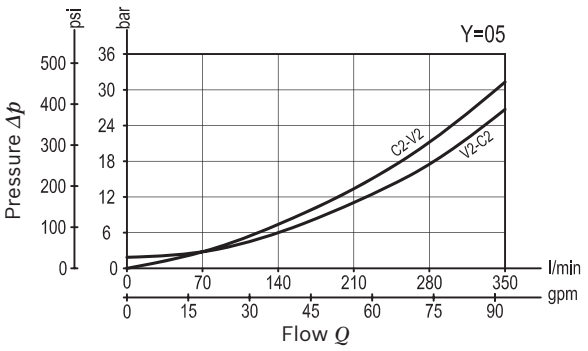

Dimensions [mm (inches)]

Ordering code

08.37.70	X	Y	Z

Single counterbalance,
with brake release port for winches

Pilot ratio

13	13:1

Port sizes	V2 - V2	C3 - Pil	
04	G 3/4	G 1/4	
05	G 1	G 1/4	

	SPRINGS		
	Adj. pressure range bar (psi)	Pres. increase bar/turn (psi/turn)	Std. setting Q=5 (l/min) bar (psi)
35	250-500 (3600-7250)	102 (1479)	500 (7250)

Pressure setting up to 410 bar: code on request.

Tamper resistant cap code
ordering code 11.04.30.001
Mat. no. R930005194

Preferred types

Type	Material number
08377013043500A	R930006597
08377013053500A	R930006596

Type	Material number

Dimensions

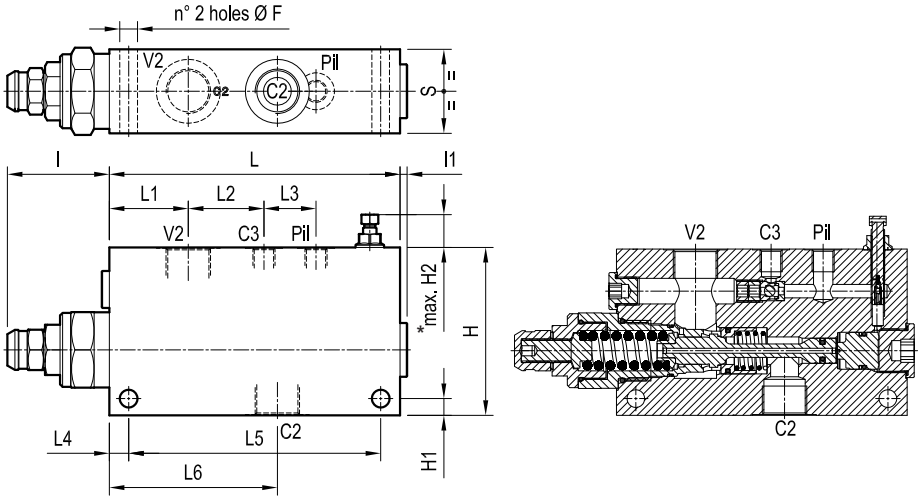

50 (1.97)	100 (3.94)	150 (5.91)	11.5 (0.45)	31 (1.22)	45 (1.77)	47 (1.85)	173 (6.81)	18.5 (0.73)	10 (0.39)	109 (4.29)	4.5 (0.18)	61 (2.4)	10.5 (0.41)			G 1	6.7 (14.8)
50 (1.97)	100 (3.94)	150 (5.91)	11.5 (0.45)	31 (1.22)	45 (1.77)	47 (1.85)	173 (6.81)	19.5 (0.77)	10 (0.39)	99 (3.9)	4.5 (0.18)	61 (2.4)	10.5 (0.41)			G 3/4	6 (13.2)
S	L6	L5	L4	L3	L2	L1	L	H2	H1	H	I1	I	F			Y	Weight kg (lbs)

* The adjusting screw can be completely unscrewed. Do not exceed the indicated protrusion range of the adjusted screw.

Single counterbalance with brake release port for winches flangeable to motor

VBSO-SE-FA-30 05.45.70 - X - Y - Z

Description

When pressure at V2 rises above the spring bias pressure, the check seat is pushed away from the piston and flow is allowed from V2 to C2. When load pressure at C2 rises above the pressure setting, the direct operated, differential area, relief function is activated and flow is relieved from C2 to V2. With pilot pressure at Pil, the pressure setting is reduced in proportion to the stated ratio of the valve, until opening and allowing flow from C2 to V2. The spring chamber is drained to V2, and any back-pressure at V2 is additive to the pressure setting in all functions. Through port C3, an incorporated shuttle valve directs either V1 or V2 line pressure to the spring actuated brake for brake opening.

Technical data

Operating pressure	up to 210 bar (3000 psi)
Max. flow	60 l/min. (16 gpm)
Flangeable on SAUER-DANFOSS orbital motors OMP-OMR series.	
Relief setting: at least 1.3 times the highest expected load. In addition, both the relief setting and the pilot ratio must be determined also in order to achieve building-up of pilot pressure in Pil high enough to release the brake prior to any valve opening from C2 to V2.	
Weight	1.13 kg (2.5 lbs)
Manifold material	Aluminium
Note: aluminium bodies are often strong enough for operating pressures exceeding 210 bar (3000 psi), depending from the fatigue life expected in the specific application. If in doubt, consult our Service Network.	
Flange seal kit [1)]	E00000000000058 (R930060588)
Fluid	Mineral oil (HL, HLP) according DIN 51524
Fluid temperature range	-30 °C to 100 (-22 to 212 °F)
Viscosity range	10 to 500 mm^2/s (cSt)
Recommended degree of fluid contamination	Class 19/17/14 according to ISO 4406
Other technical data	see data sheet 18350-50

Note: for applications outside these parameters, please consult us.

[1)] Seals for 10 valves

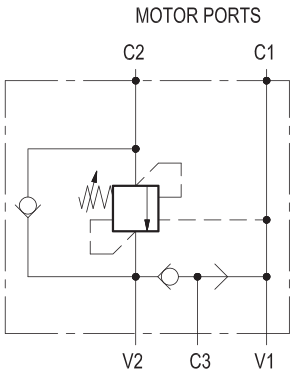

Characteristic curve

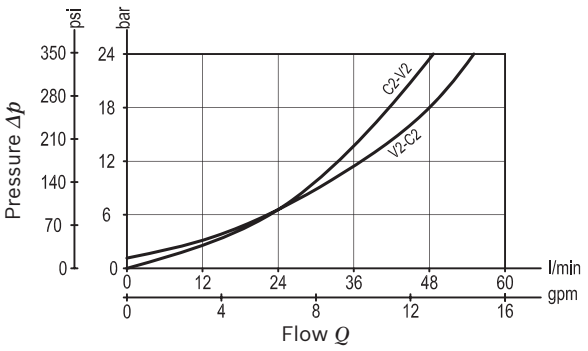

Ordering code

05.45.70	X	Y	Z

Single counterbalance,
with brake release port for winches
flangeable to motor

Pilot ratio

03	4.2:1

Port sizes	V1 - V2	C1 - C2	C3
03	G 1/2	Ø 8.5 (0.34)	G 1/4

	SPRINGS		
	Adj. pressure range bar (psi)	Pres. increase bar/turn (psi/turn)	Std. setting Q=5 (l/min) bar (psi)
20	60-210 (900-3000)	72 (1088)	200 (2900)
35	180-350 (2610-5000)	138 (2001)	350 (5000)

Tamper resistant cap
ordering code 11.04.23.002
Mat. no. R930000752

Preferred types

Type	Material number
05457003032000A	R930002090
05457003033500A	R930002091

Type	Material number

Dimensions

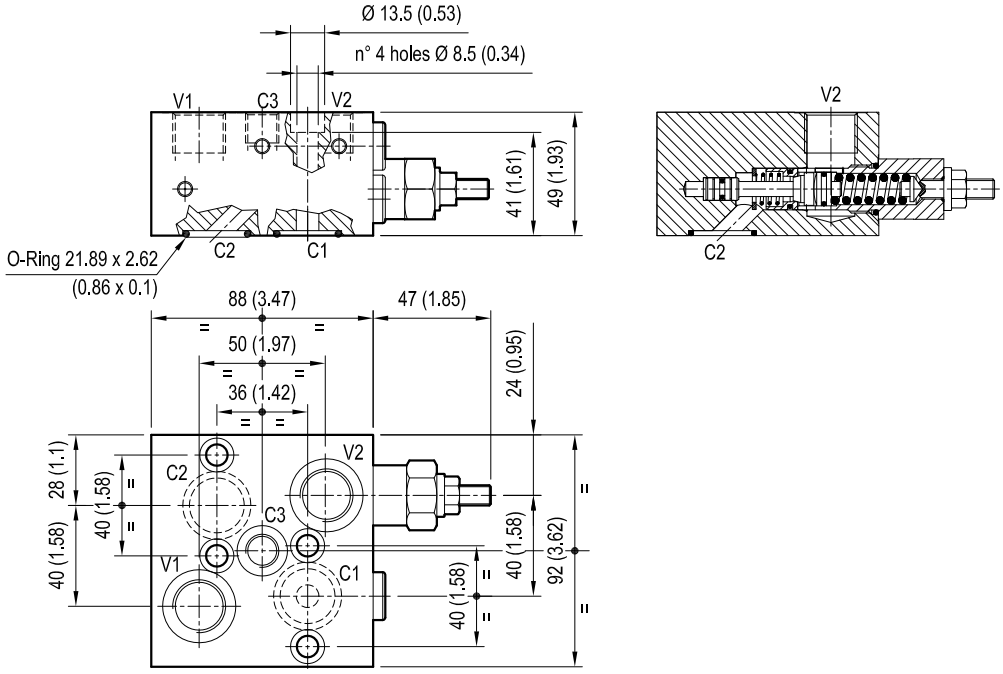

Single counterbalance with brake release port for winches flangeable to motor

VBSO-SE-FA-30 05.45.71 - X - Y - Z

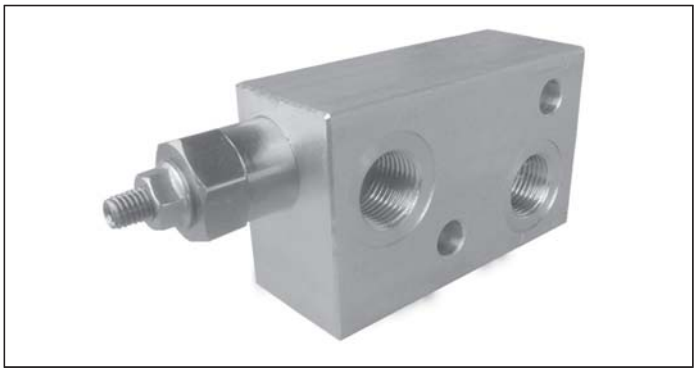

Description

When pressure at V2 rises above the spring bias pressure, the check seat is pushed away from the piston and flow is allowed from V2 to C2. When load pressure at C2 rises above the pressure setting, the direct operated, differential area, relief function is activated and flow is relieved from C2 to V2. With pilot pressure at V1-C1, the pressure setting is reduced in proportion to the stated ratio of the valve, until opening and allowing flow from C2 to V2. The spring chamber is drained to V2, and any back-pressure at V2 is additive to the pressure setting in all functions. Through port C3, an incorporated shuttle valve directs either V1 or V2 line pressure to the spring actuated brake for brake opening.

Technical data

Operating pressure	up to 210 bar (3000 psi)
Max. flow	60 l/min. (16 gpm)
Flangeable on SAUER-DANFOSS orbital motors OMS series.	
Relief setting: at least 1.3 times the highest expected load. In addition, both the relief setting and the pilot ratio must be determined also in order to achieve building-up of pilot pressure in V1 high enough to release the brake prior to any valve opening from C2 to V2.	
Weight	0.8 kg (1.76 lbs)
Manifold material	Aluminium
Note: aluminium bodies are often strong enough for operating pressures exceeding 210 bar (3000 psi), depending from the fatigue life expected in the specific application. If in doubt, consult our Service Network.	
Flange seal kit [1)]	E00000000000032 (R930005697)
Fluid	Mineral oil (HL, HLP) according DIN 51524
Fluid temperature range	-30 °C to 100 (-22 to 212 °F)
Viscosity range	10 to 500 mm^2/s (cSt)
Recommended degree of fluid contamination	Class 19/17/14 according to ISO 4406
Other technical data	see data sheet 18350-50

Note: for applications outside these parameters, please consult us.

[1)] Seals for 10 valves

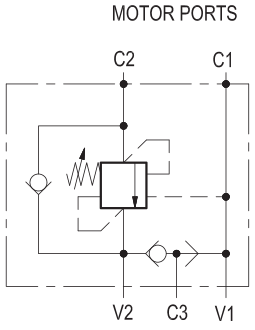

Characteristic curve

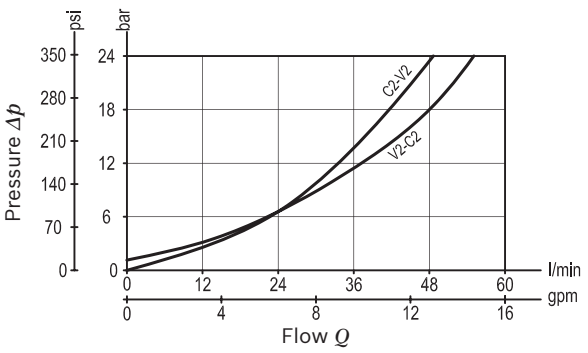

Dimensions [mm (inches)]

Ordering code

05.45.71	X	Y	Z

Single counterbalance,
with brake release port for winches
flangeable to motor

Pilot ratio

03	4.2:1

	SPRINGS		
	Adj. pressure range bar (psi)	Pres. increase bar/turn (psi/turn)	Std. setting Q=5 (l/min) bar (psi)
35	180-350 (2610-5000)	138 (2001)	350 (5000)

Tamper resistant cap
ordering code 11.04.23.002
Mat. no. R930000752

Port sizes	V1 - V2	C2	C3
03	G 1/2	Ø 9 (0.35)	G 1/4

Preferred types

Type	Material number
05457103033500A	R930002092

Type	Material number

Dimensions

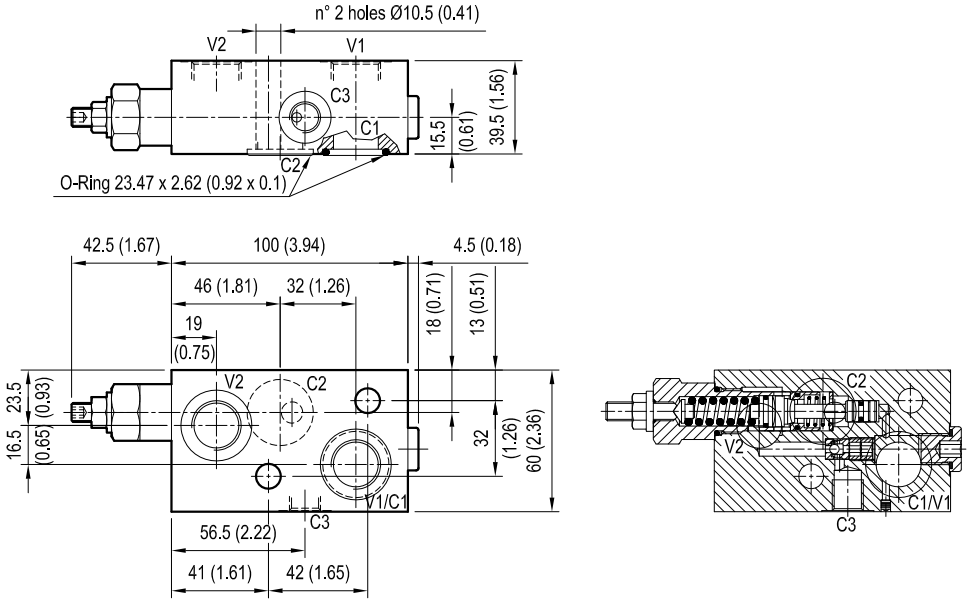

Single counterbalance with brake release port for winches, flangeable to motor

VBSO-SE-FA-33 05.49.81 - X - Y - Z

Description

When pressure at V2 rises above the spring bias pressure, the check seat is pushed away from the piston and flow is allowed from V2 to C2. When load pressure at C2 rises above the pressure setting, the direct operated, differential area, relief function is activated and flow is relieved from C2 to V2. With pilot pressure at C5, the pressure setting is reduced in proportion to the stated ratio of the valve, until opening and allowing flow from C2 to V2. The spring chamber is drained to V2, and any back-pressure at V2 is additive to the pressure setting in all functions. Through port C3, an incorporated shuttle valve directs either V1 or V2 line pressure to the spring actuated brake for brake opening.

Technical data

Operating pressure	up to 210 bar (3000 psi)
Max. flow	170 l/min. (45 gpm)
Flangeable on REXROTH motors A2FE 45-56-63 series.	
Relief setting: at least 1.3 times the highest expected load. In addition, both the relief setting and the pilot ratio must be determined also in order to achieve building-up of pilot pressure in V1 high enough to release the brake prior to any valve opening from C2 to V2.	
Weight	2.9 kg (6.3 lbs)
Manifold material	Anodized aluminium
Note: aluminium bodies are often strong enough for operating pressures exceeding 210 bar (3000 psi), depending from the fatigue life expected in the specific application. If in doubt, consult our Service Network.	
Flange seal kit [1)]	E00000000000059 (R930060589)
Fluid	Mineral oil (HL, HLP) according DIN 51524
Fluid temperature range	-30 °C to 100 (-22 to 212 °F)
Viscosity range	10 to 500 mm^2/s (cSt)
Recommended degree of fluid contamination	Class 19/17/14 according to ISO 4406
Other technical data	see data sheet 18350-50

Note: for applications outside these parameters, please consult us.

[1)] Seals for 10 valves

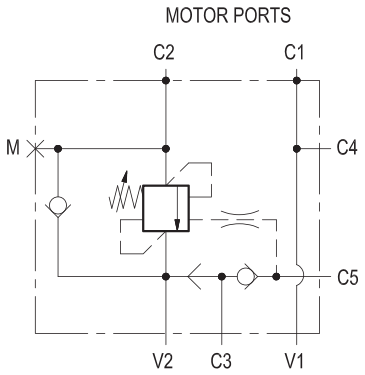

Characteristic curve

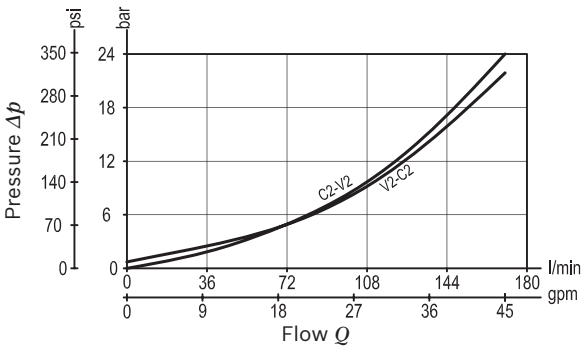

Ordering code

05.49.81	X	Y	Z

Single counterbalance,
with brake release port for winches
flangeable to motor

Pilot ratio

03 4:1

Port sizes	V1 - V2	C1 - C2	C3 - C4 - C5
04	G 3/4	Ø 20 (0.79)	G 1/4

	SPRINGS		
	Adj. pressure range bar (psi)	Pres. increase bar/turn (psi/turn)	Std. setting Q=5 (l/min) bar (psi)
35	150-350 (2175-5000)	110 (1595)	350 (5000)

Tamper resistant cap
ordering code 11.04.30.001
Mat. no. R930005194

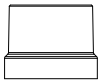

Preferred types

Type	Material number
05498103043500B	R930007047

Type	Material number

Dimensions

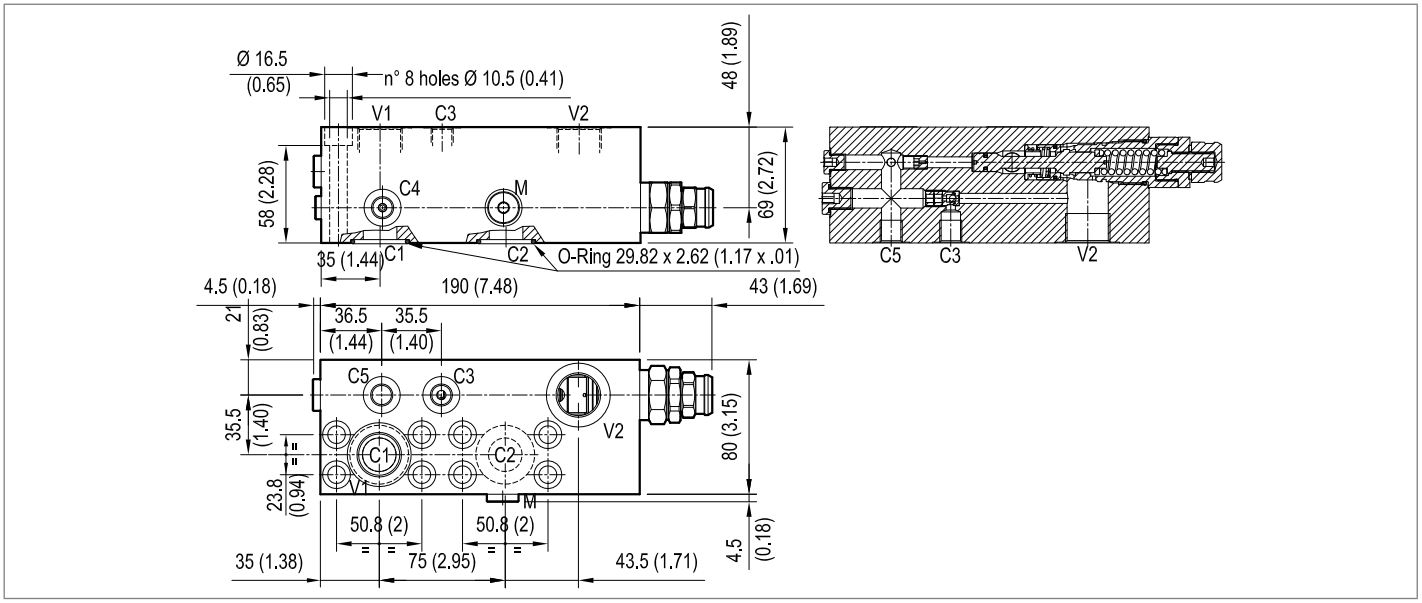

Single counterbalance with brake release port for winches flangeable to motor

VBSO-SE-FA-RD-30 05.45.24 - X - Y - Z

Description

When pressure at V2 rises above the spring bias pressure, the check seat is pushed away from the piston and flow is allowed from V2 to C2. When load pressure at C2 rises above the pressure setting, the direct operated relief function is activated and flow is relieved from C2 to V2. With pilot pressure at V1-C1, the pressure setting is reduced in proportion to the stated ratio of the valve, until opening and allowing flow from C2 to V2. The spring chamber is drained to V2, and any back-pressure at V2 is additive to the pressure setting in all functions. Through port C3, an incorporated shuttle valve directs either V1 or V2 line pressure to the spring actuated brake for brake opening. Through port D, a twin check valve system recovers any oil drain from the motor and delivers it to either V1 or V2 line, depending on which one is open to tank.

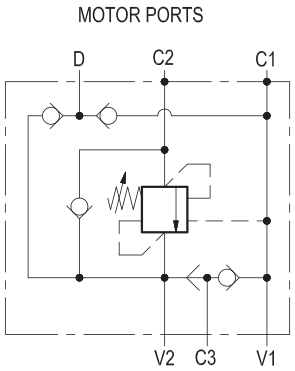

Technical data

Operating pressure	up to 210 bar (3000 psi)
Max. flow	60 l/min. (16 gpm)
Flangeable on SAUER-DANFOSS orbital motors OMP-OMR series.	
Relief setting: at least 1.3 times the highest expected load. In addition, both the relief setting and the pilot ratio must be determined also in order to achieve building-up of pilot pressure in V1 high enough to release the brake prior to any valve opening from C2 to V2.	
Weight	1.25 kg (2.8 lbs)
Manifold material	Aluminium
Note: aluminium bodies are often strong enough for operating pressures exceeding 210 bar (3000 psi), depending from the fatigue life expected in the specific application. If in doubt, consult our Service Network.	
Flange seal kit [1)]	E00000000000058 (R930060588)
Fluid	Mineral oil (HL, HLP) according DIN 51524
Fluid temperature range	-30 °C to 100 (-22 to 212 °F)
Viscosity range	10 to 500 mm^2/s (cSt)
Recommended degree of fluid contamination	Class 19/17/14 according to ISO 4406
Other technical data	see data sheet 18350-50
Relief setting: at least 1.3 times the highest expected load.	

Note: for applications outside these parameters, please consult us.

[1)] Seals for 10 valves

Characteristic curve

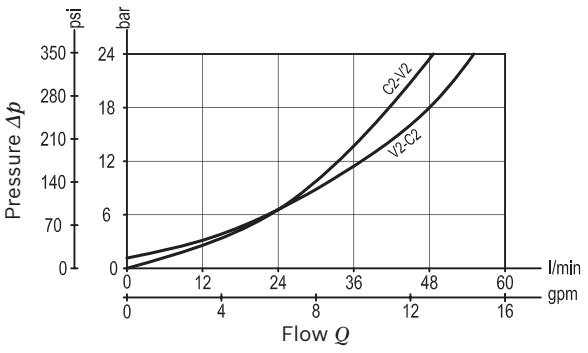

Ordering code

05.45.24	X	Y	Z

Single counterbalance,
with brake release port for winches
flangeable to motor

Pilot ratio

03	4.2:1

	SPRINGS		
	Adj. pressure range bar (psi)	Pres. increase bar/turn (psi/turn)	Std. setting Q=5 (l/min) bar (psi)
20	60-210 (900-3000)	56 (812)	200 (2900)

Tamper resistant cap
ordering code 11.04.23.002
Mat. no. R930000752

Port sizes	V1 - V2	C1 - C2	C3 - D
03	G 1/2	Ø 8.5 (0.34)	G 1/4

Preferred types

Type	Material number
05452403032000A	R930002088

Type	Material number

Dimensions

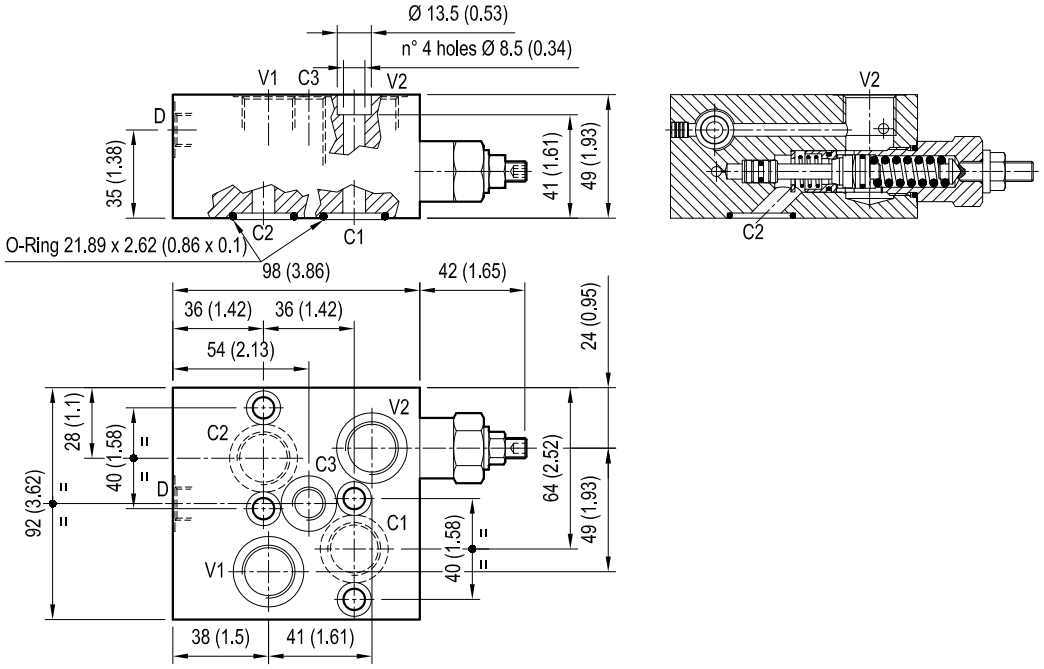

Single counterbalance with brake release port for winches flangeable to motor

VBSO-SE-FA-RD-90 05.35.01 - X - Y - Z

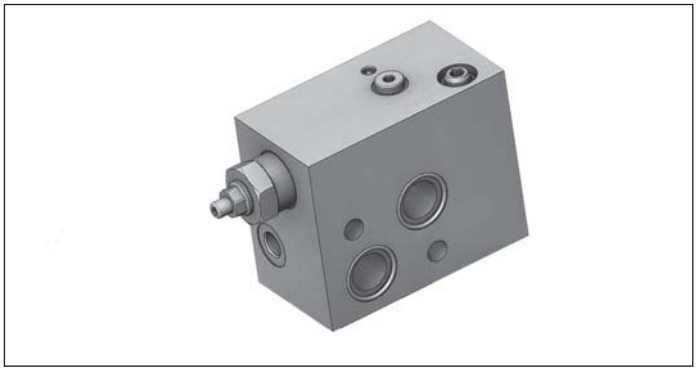

Description

When pressure at V2 rises above the spring bias pressure, the check seat is pushed away from the piston and flow is allowed from V2 to C2. When load pressure at C2 rises above the pressure setting, the direct operated relief function is activated and flow is relieved from C2 to V2. With pilot pressure at C5, the pressure setting is reduced in proportion to the stated ratio of the valve, until opening and allowing flow from C2 to V2. The spring chamber is drained to V2, and any back-pressure at V2 is additive to the pressure setting in all functions. Through port C3, an incorporated shuttle valve directs either V1 or V2 line pressure to the spring actuated brake for brake opening. Through port D, a twin check valve system recovers any oil drain from the motor and delivers it to either V1 or V2 line, depending on which one is open to tank.

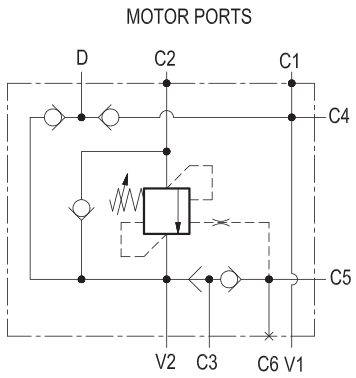

Technical data

Operating pressure	up to 210 bar (3000 psi)
Max. flow	90 l/min. (24 gpm)
Flangeable on SAUER-DANFOSS orbital motors OMS-OMSW-OMSS series.	
Relief setting: at least 1.3 times the highest expected load. In addition, both the relief setting and the pilot ratio must be determined also in order to achieve building-up of pilot pressure in V1 high enough to release the brake prior to any valve opening from C2 to V2.	
Weight	1.6 kg (3.5 lbs)
Manifold material	Anodized aluminium
Note: aluminium bodies are often strong enough for operating pressures exceeding 210 bar (3000 psi), depending from the fatigue life expected in the specific application. If in doubt, consult our Service Network.	
Flange seal kit [1]	E00000000000032 (R930005697)
Fluid	Mineral oil (HL, HLP) according DIN 51524
Fluid temperature range	-30 °C to 100 (-22 to 212 °F)
Viscosity range	10 to 500 mm^2/s (cSt)
Recommended degree of fluid contamination	Class 19/17/14 according to ISO 4406
Other technical data	see data sheet 18350-50

Note: for applications outside these parameters, please consult us.

[1] Seals for 10 valves

Characteristic curve

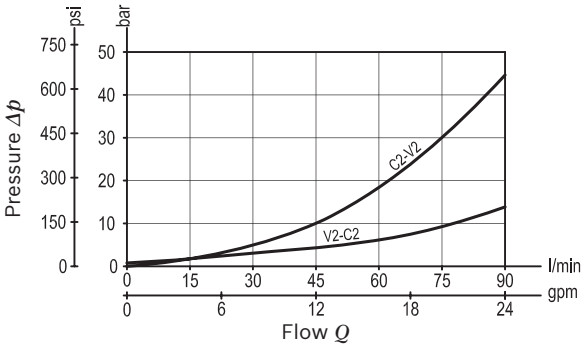

Dimensions [mm (inches)]

Ordering code

05.35.01	X	Y	Z

Single counterbalance,
with brake release port for winches
flangeable to motor

Pilot ratio

03	4.2:1

	SPRINGS		
	Adj. pressure range bar (psi)	Pres. increase bar/turn (psi/turn)	Std. setting Q=5 (l/min) bar (psi)
35	150-350 (2175-5000)	120 (1740)	350 (5000)

Tamper resistant cap
ordering code 11.04.23.002
Mat. no. R930000752

Port sizes	V1-V2	C1-C2	C3-C4-C5-D	C6
03	G 1/2	Ø 19 (0.75)	G 1/4	G 1/4

Preferred types

Type	Material number
053501030335000	R930001513

Type	Material number

Dimensions

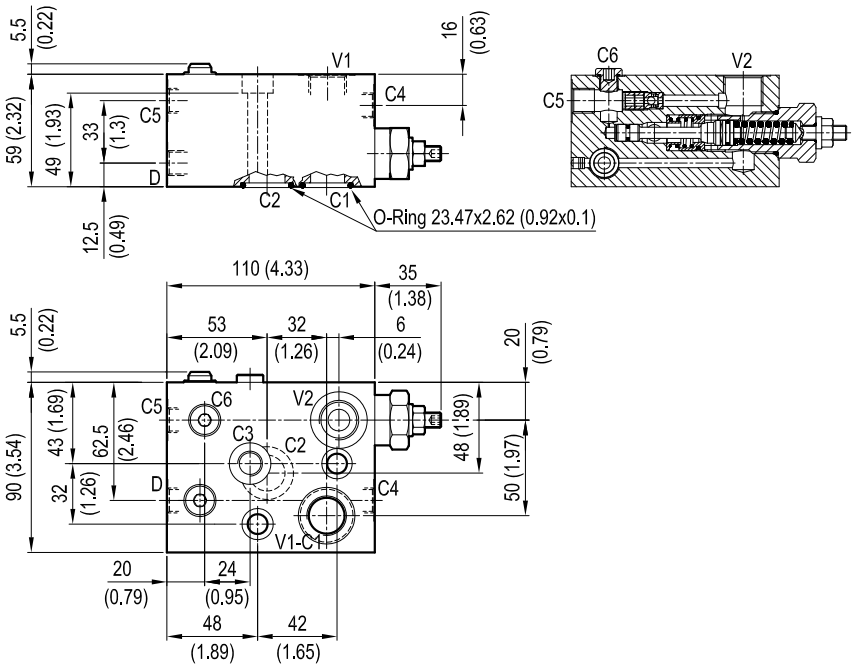

Single counterbalance with brake release port for winches flangeable

A-VBSO-SE-FA-42 08.45.38 - X - Y - Z

Description

When pressure at V2 rises above the spring bias pressure, the check seat is pushed away from the piston and flow is allowed from V2 to C2. When load pressure at C2 rises above the pressure setting, the direct operated, differential area, relief function is activated and flow is relieved from C2 to V2. With pilot pressure at P, the pressure setting is reduced in proportion to the stated ratio of the valve, until opening and allowing flow from C2 to V2. The spring chamber is drained to V2, and any back-pressure at V2 is additive to the pressure setting in all functions. Through port C3, an incorporated shuttle valve directs either P or V2 line pressure to the spring actuated brake for brake opening.

Technical data

Max. operating pressure	410 bar (5945 psi)
Max. flow	350 l/min. (93 gpm)
The high pilot ratio (13:1) has been developed for energy saving; for higher stability at all flows and pressures, the pilot line includes hydraulic damping.	
The C2 port is designed with “SAE flange” pattern in order to be gasket mounted directly to the motor.	
Relief setting: at least 1.3 times the highest expected load. In addition, both the relief setting and the pilot ratio must be determined also in order to achieve building-up of pilot pressure in V1 high enough to release the brake prior to any valve opening from C2 to V2.	
Weight	see “Dimensions”
Manifold material	Zinc plated steel
Flange seal kit [1]	E00000000000002 (R930004532)
Fluid	Mineral oil (HL, HLP) according DIN 51524
Fluid temperature range	-30 °C to 100 (-22 to 212 °F)
Viscosity range	10 to 500 mm^2/s (cSt)
Recommended degree of fluid contamination	Class 19/17/14 according to ISO 4406
Other technical data	see data sheet 18350-50

Note: for applications outside these parameters, please consult us.

[1] Seals for 10 valves

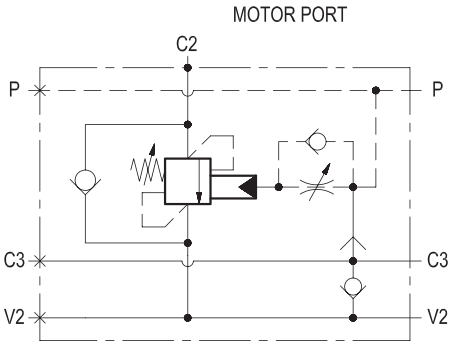

Characteristic curve

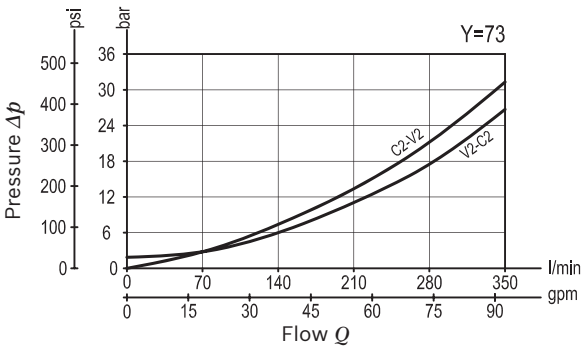

Dimensions [mm (inches)]

Ordering code

08.45.38	X	Y	Z

Single counterbalance, with brake release port for winches flangeable

Pilot ratio

13	13:1

Port sizes	V2 - C2	C3 - P	
72	3/4 SAE6000	G 1/4	
73	1 SAE6000	G 1/4	
64	1-1/4 SAE6000	G 1/4	

	SPRINGS		
	Adj. pressure range bar (psi)	Pres. increase bar/turn (psi/turn)	Std. setting Q=5 (l/min) bar (psi)
35	250-500 (3625-7250)	102 (1479)	500 (7250)

Pressure setting up to 410 bar: code on request.

Tamper resistant cap
ordering code 11.04.30.001
Mat. no. R930005194

Preferred types

Type	Material number
08453813723500E	R930050895
08453813733500G	R930050897

Type	Material number
08453813643500E	R930051159

Dimensions

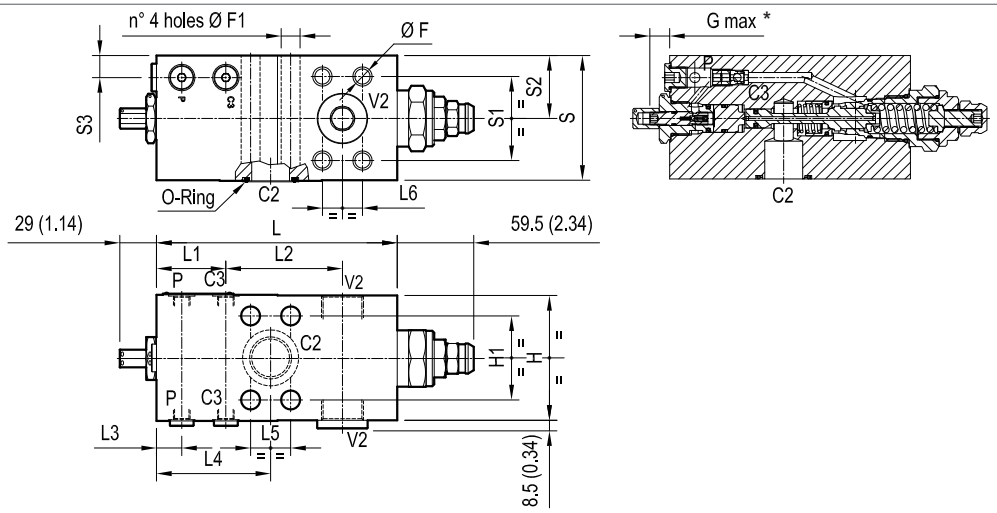

17.5 (0.69)	48 (1.89)	66.7 (2.63)	98 (3.86)	31.8 (1.25)	31.8 (1.25)	90.5 (3.56)	20 (0.79)	92.5 (3.64)	55 (2.17)	191 (7.52)	66.7 (2.63)	98 (3.86)	15 (0.59)	M14	19 (0.75)	36.09x3.53 (1.42x0.14)	64	13.3 (29.3)
16 (0.63)	40 (1.58)	57.2 (2.25)	79 (3.11)	27.8 (1.1)	27.8 (1.1)	91 (3.58)	20 (0.79)	85 (3.35)	59 (2.32)	191 (7.52)	57.2 (2.25)	79 (3.11)	12.5 (0.49)	M12	21 (0.83)	32.92x3.53 (1.3x0.14)	73	8.7 (19.2)
16 (0.63)	39.5 (1.56)	50.8 (2)	79 (3.11)	23.8 (0.94)	23.8 (0.94)	91 (3.58)	20 (0.79)	85 (3.35)	59 (2.32)	191 (7.52)	50.8 (2)	79 (3.11)	10.5 (0.41)	M10	19 (0.75)	23.39x3.53 (0.92x0.14)	72	8.8 (19.4)
S3	S2	S1	S	L6	L5	L4	L3	L2	L1	L	H1	H	F1	F	G	O-Ring	Y	Weight kg (lbs)

* The adjusting screw can be completely unscrewed. Do not exceed the indicated protrusion range of the adjusted screw.

Single counterbalance with brake release port for winches, flangeable

A-VBSO-SE-FA-42 08.45.39 - X - Y - Z

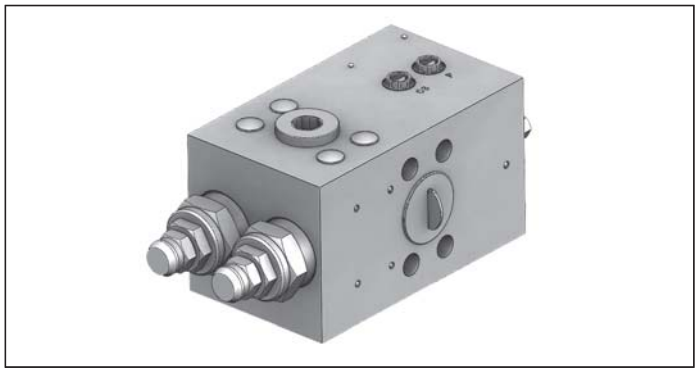

Description

When pressure at V2 rises above the spring bias pressure, the check seats are pushed away from the pistons and flow is allowed from V2 to C2. When load pressure at C2 rises above the pressure setting, the direct operated, differential area, relief functions are activated and flow is relieved from C2 to V2. With pilot pressure at P, the pressure setting is reduced in proportion to the stated ratio of the valve, until opening and allowing flow from C2 to V2. The spring chambers are drained to V2, and any back-pressure at V2 is additive to the pressure setting in all functions. Through port C3, an incorporated shuttle valve directs either P or V2 line pressure to the spring actuated brake for brake opening.

Technical data

Max. operating pressure	410 bar (5945 psi)
Max. flow	550 l/min. (145 gpm)
The high pilot ratio (13:1) has been developed for energy saving; for higher stability at all flows and pressures, the pilot line includes hydraulic damping.	
The C2 port is designed with “SAE flange” pattern in order to be gasket mounted directly to the motor.	
Relief setting: at least 1.3 times the highest expected load. In addition, both the relief setting and the pilot ratio must be determined also in order to achieve building-up of pilot pressure in P high enough to release the brake prior to any valve opening from C2 to V2.	
Weight	16.3 kg (35.9 lbs)
Manifold material	Zinc plated steel
Flange seal kit [1]	E00000000000004 (R930004534)
Fluid	Mineral oil (HL, HLP) according DIN 51524
Fluid temperature range	-30 °C to 100 (-22 to 212 °F)
Viscosity range	10 to 500 mm^2/s (cSt)
Recommended degree of fluid contamination	Class 19/17/14 according to ISO 4406
Other technical data	see data sheet 18350-50

Note: for applications outside these parameters, please consult us.

[1] Seals for 10 valves

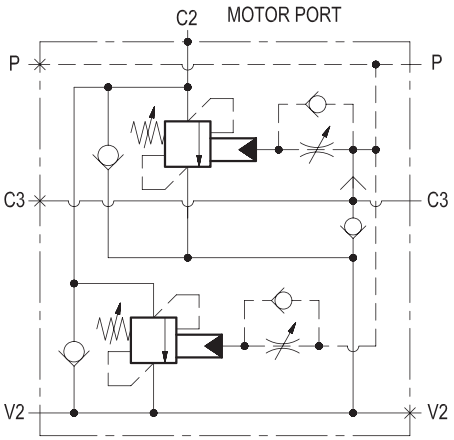

Characteristic curve

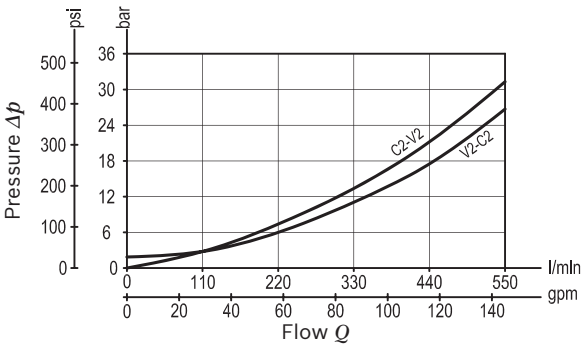

Dimensions [mm (inches)]

Ordering code

08.45.39	X	Y	Z

Single counterbalance,
with brake release port for winches,
flangeable

Pilot ratio

13	13:1

Port sizes	V2 - C2	C3 - P	
64	1-1/4 SAE6000	G 1/4	

	SPRINGS		
	Adj. pressure range bar (psi)	Pres. increase bar/turn (psi/turn)	Std. setting Q=5 (l/min) bar (psi)
35	250-500 (3625-7250)	102 (1479)	450 (6500)

Pressure setting up to 410 bar: code on request.

Tamper resistant cap
ordering code 11.04.30.001
Mat. no. R930005194

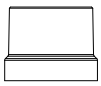

Preferred types

Type	Material number
08453913643590E	R930055027

Type	Material number

Dimensions

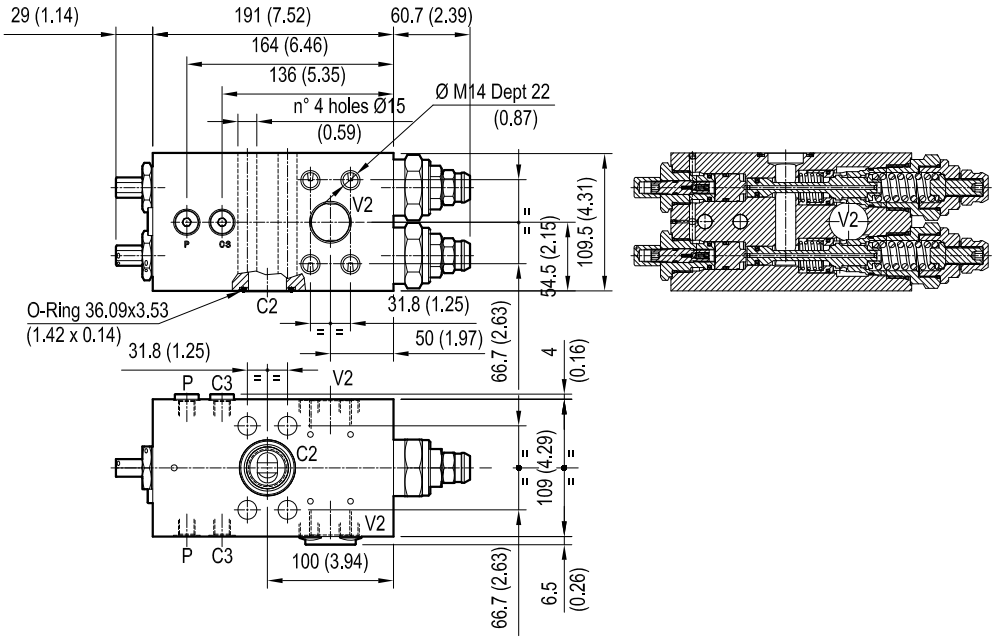

Load holding/motion control

Valves for motors: dual counterbalance with brake release port

Designation	Description	Ports	Code	Data sheet	Page
Dual counterbalance with brake release port, standard configuration	A-VBSO-DE-VF-30	G 3/8, G 1/2	084410XYZ	18308-53	229
Dual counterbalance with brake release port, standard configuration	VBSO-DE-VF-30-FM	on REXROTH motors A2FE-28-32 series	060208052	18308-54	231
Dual counterbalance with brake release port, standard configuration	VBSO-DE-VF-30-VSDI-FM	on SAUER-DANFOSS OMP-OMR series	060301X	18308-55	233
Dual counterbalance with brake release port, standard configuration	VBSO-DE-VF-30-FM	on SAUER-DANFOSS OMS series	060301X	18308-56	235
Dual counterbalance and cross over relief with brake release port	VBSO-DE-VF-30-VSDI-FM	on SAUER-DANFOSS OMP-OMR series	060301X	18308-57	237
Dual counterbalance and cross over relief with brake release port	VBSO-DE-VF-30-VSDI-FM	on SAUER-DANFOSS OMS series	060301X	18308-58	239
Dual counterbalance with pressure reducer for brake port release	VBSO-DE-VF-30-FM	on REXROTH motors A2FE-28-32 series	060208061	18308-59	241
Dual counterbalance with pressure reducer for brake port release	A-VBSN-DE-VF-12A-FM	on REXROTH motors A2FE-45-56-63 series	084635XYZ	18308-60	243
Dual counterbalance with pressure reducer for brake port release	A-VBSN-DE-VF-20A-FM	on REXROTH motors A2FE-80-90 series	084632XYZ	18308-61	245
Dual counterbalance with pressure reducer for brake port release	A-VBSN-DE-VF-20A-FM	on REXROTH motors A2FE-107-125 series	084633XYZ	18308-62	247

Dual counterbalance, with brake release port

A-VBSO-DE-VF-30

08.44.10 - X - Y - Z

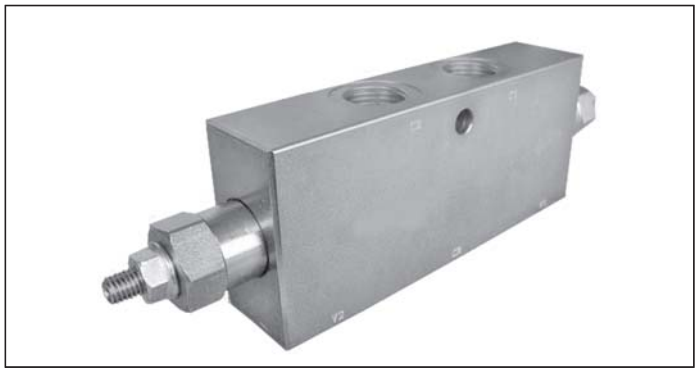

Technical data

Max. operating pressure	410 bar (5945 psi)
Max. flow	60 l/min. (16 gpm)
Weight	see “Dimensions”
Manifold material	Zinc plated steel
Fluid	Mineral oil (HL, HLP) according DIN 51524
Fluid temperature range	-30 °C to 100 (-22 to 212 °F)
Viscosity range	5 to 800 mm^2/s (cSt)
Recommended degree of fluid contamination	Class 19/17/14 according to ISO 4406
Other technical data	see data sheet 18350-50
Relief setting: at least 1.3 times the highest expected load.	

Note: for applications outside these parameters, please consult us.

Description

It provides static and dynamic motion control by regulating the flow IN and OUT of the hydraulic motor, through ports C1 and C2. It includes 2 sections, each one composed by a check and a relief valve pilot assisted by pressure in the opposite line: the check allows free flow into the motor, then locks and prevents reverse movement. With pilot pressure applied at the line across, the pressure setting of the relief is reduced in proportion to the stated ratio until opening and allowing controlled reverse motion. With motor turning and without pilot pressure, the relief function builds up back-pressure at the motor port in order to stop the motion. Back-pressure at V1 or V2 is additive to the pressure setting in all functions. Through port C3, a shuttle valve directs either V1 or V2 line pressure to the spring actuated brake for brake releasing.

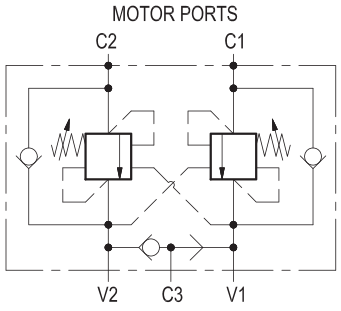

Characteristic curve

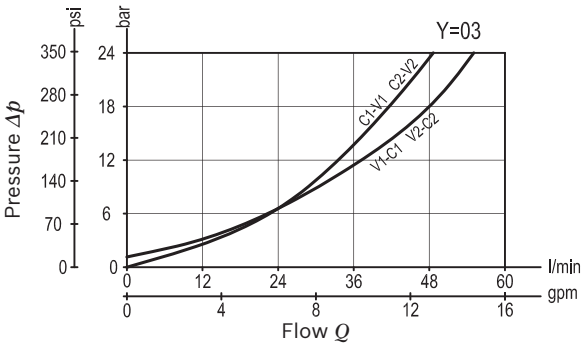

Dimensions [mm (inches)]

Ordering code

08.44.10	X	Y	Z

Dual counterbalance
with brake release port

Pilot ratio	
03	4.2:1
85	11:1

Port sizes	V1 - V2	C1 - C2	C3
02	G 3/8	G 3/8	G 1/4
03	G 1/2	G 1/2	G 1/4

		SPRINGS		
		Adj. pressure range bar (psi)	Pres. increase bar/turn (psi/turn)	Std. setting Q=5 (l/min) bar (psi)
20	for X=03	60-210 (870-3000)	56 (812)	200 (2900)
	for X=85	60-350 (870-5000)	70 (1015)	250 (3600)
35	for X=03	180-350 (2610-5000)	138 (2001)	350 (5000)
	for X=85	60-350 (870-5000)	70 (1015)	350 (5000)

Pressure setting up to 410 bar: code on request.

Tamper resistant cap
ordering code 11.04.23.002
Mat. no. R930000752

Preferred types

Type	Material number
08441003022000A	R930003382
084410030235000	R930006149
08441085022000A	R930003385
084410030335000	R930003384

Type	Material number
08441003032000A	R930003383
084410850235000	R930001956
08441085032000A	R930003386
084410850335000	R930003387

Dimensions

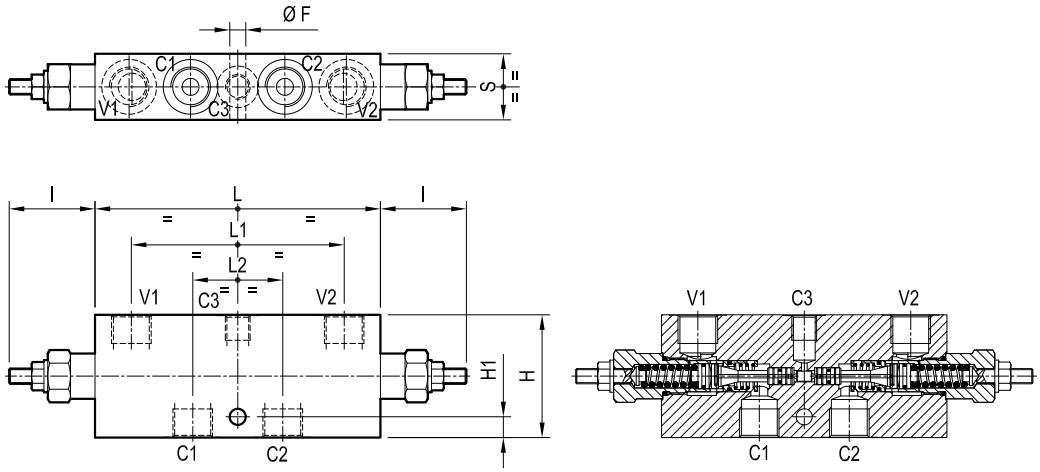

35 (1.38)	47.6 (1.87)	112.6 (4.43)	151 (5.95)	45.5 (1.79)	11 (0.43)	65 (2.56)		8.5 (0.34)							G 1/2	2.5 (5.5)
30 (1.18)	47.6 (1.87)	109.6 (4.32)	151 (5.95)	45.5 (1.79)	8.5 (0.34)	55 (2.17)		8.5 (0.34)							G 3/8	1.88 (4.1)
S	L2	L1	L	l	H1	H		F							Y	Weight kg (lbs)

Dual counterbalance with brake release port

VBSO-DE-VF-30-FM 06.02.08.052

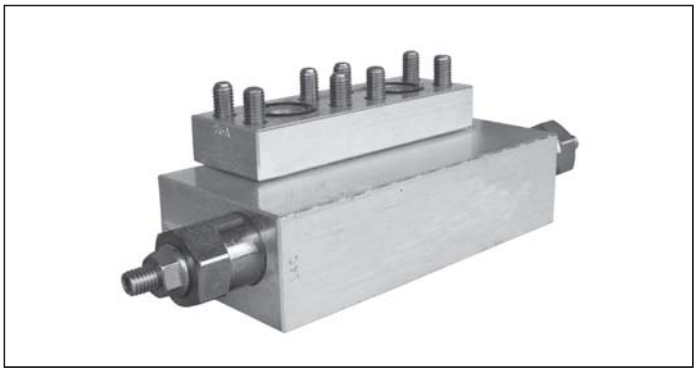

Description

It provides static and dynamic motion control by regulating the flow IN and OUT of the hydraulic motor, through ports C1 and C2. It includes 2 sections, each one composed by a check and a relief valve pilot assisted by pressure in the opposite line: the check allows free flow into the motor, then locks and prevents reverse movement. With pilot pressure applied at the line across, the pressure setting of the relief is reduced in proportion to the stated ratio until opening and allowing controlled reverse motion. With motor turning and without pilot pressure, the relief function builds up back-pressure at the motor port in order to stop the motion. Back-pressure at V1 or V2 is additive to the pressure setting in all functions. Through port C3, a shuttle valve directs either V1 or V2 line pressure to the spring actuated brake for brake releasing.

Technical data

Operating pressure	up to 210 bar (3000 psi)
Max. flow	60 l/min. (16 gpm)
Flangeable on REXROTH motors A2FE 28-32 series.	
Relief setting: at least 1.3 times the highest expected load. In addition, both the relief setting and the pilot ratio must be determined in order to achieve building-up of pilot pressure in V1 or V2 high enough to release the brake prior to any valve opening.	
Weight	1.6 kg (3.5 lbs)
Manifold material	Aluminium
Note: aluminium bodies are often strong enough for operating pressures exceeding 210 bar (3000 psi), depending from the fatigue life expected in the specific application. If in doubt, consult our Service Network.	
Flange seal kit [1)]	E00000000000020 (R930000144)
Fluid	Mineral oil (HL, HLP) according DIN 51524
Fluid temperature range	-30 °C to 100 (-22 to 212 °F)
Viscosity range	10 to 500 mm^2/s (cSt)
Recommended degree of fluid contamination	Class 19/17/14 according to ISO 4406
Other technical data	see data sheet 18350-50

Note: for applications outside these parameters, please consult us.

[1)] Seals for 5 valves

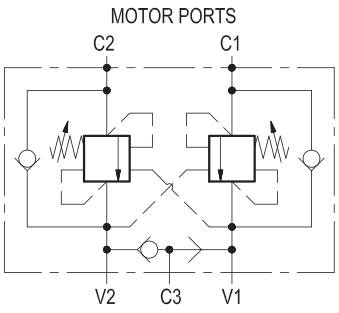

Characteristic curve

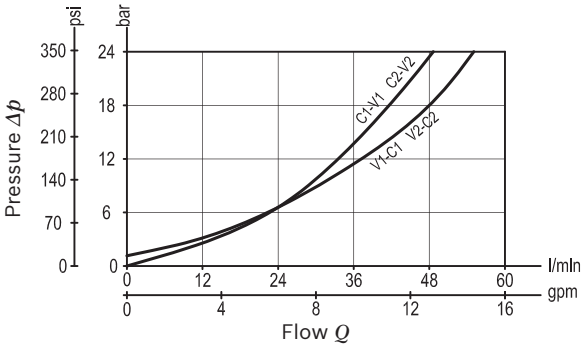

Ordering code

06.02.08.052

Dual counterbalance
with brake release port

Pilot ratio

11:1

SPRINGS		
Adj. pressure range bar (psi)	Pres. increase bar/turn (psi/turn)	Std. setting Q=5 (l/min.) bar (psi)
60-250 (900-3600)	76 (1102)	250 (3600)

Port sizes	V1 - V2	C1 - C2	C3
	G 1/2	1/2 SAE 6000	G 1/4

Tamper resistant ordering cap
ordering code 11.04.23.002
Mat. no. R930000752

Preferred types

Type	Material number
06020805200000A	R930002728

Type	Material number

Dimensions

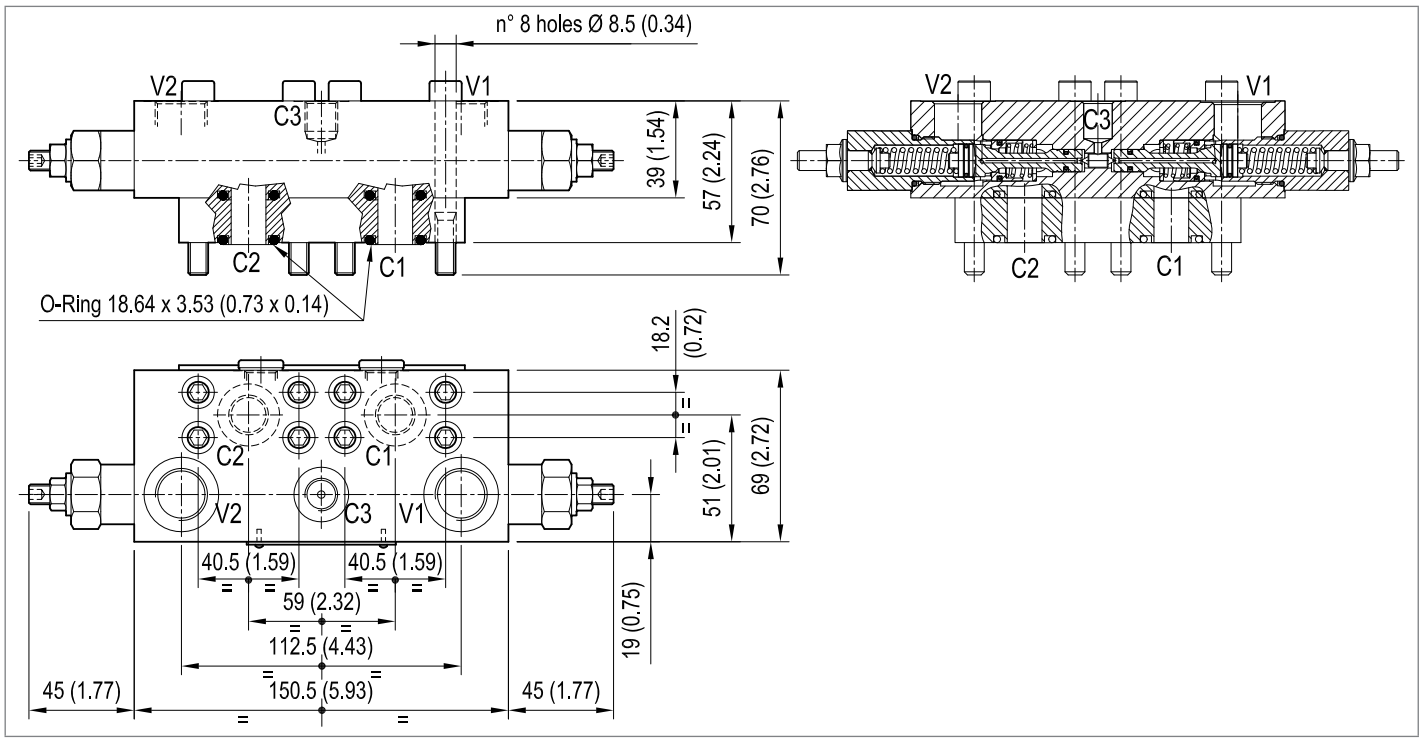

Dual counterbalance with brake release port

VBSO-DE-VF-30-VSDI-FM 06.03.01 - X

Technical data

Operating pressure	up to 210 bar (3000 psi)
Max. flow	60 l/min. (16 gpm)
Flangeable on SAUER-DANFOSS orbital motors OMP-OMR series.	
Relief setting: at least 1.3 times the highest expected load. In addition, both the relief setting and the pilot ratio must be determined in order to achieve building-up of pilot pressure in V1 or V2 high enough to release the brake prior to any valve opening.	
Weight	1.6 kg (3.5 lbs)
Manifold material	Aluminium
Note: aluminium bodies are often strong enough for operating pressures exceeding 210 bar (3000 psi), depending from the fatigue life expected in the specific application. If in doubt, consult our Service Network.	
Fluid	Mineral oil (HL, HLP) according DIN 51524
Fluid temperature range	-30 °C to 100 (-22 to 212 °F)
Viscosity range	10 to 500 mm^2/s (cSt)
Recommended degree of fluid contamination	Class 19/17/14 according to ISO 4406
Other technical data	see data sheet 18350-50

Note: for applications outside these parameters, please consult us.

Description

It provides static and dynamic motion control by regulating the flow IN and OUT of the hydraulic motor, through ports C1 and C2. It includes 2 sections, each one composed by a check and a relief valve pilot assisted by pressure in the opposite line: the check allows free flow into the motor, then locks and prevents reverse movement. With pilot pressure applied at the line across, the pressure setting of the relief is reduced in proportion to the stated ratio until opening and allowing controlled reverse motion. With motor turning and without pilot pressure, the relief function builds up back-pressure at the motor port in order to stop the motion. Back-pressure at V1 or V2 is additive to the pressure setting in all functions. Through port C3, a shuttle valve directs either V1 or V2 line pressure to the spring actuated brake for brake releasing.

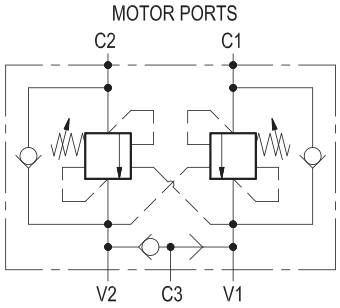

Characteristic curve

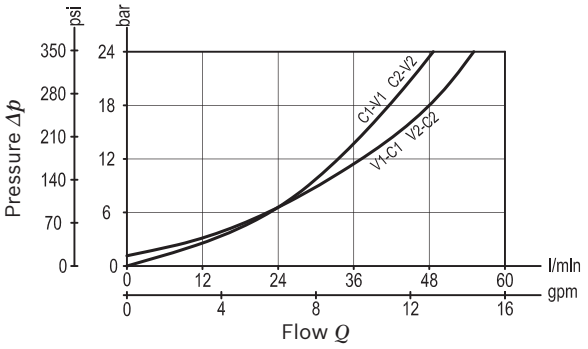

Ordering code

06.03.01	X

Dual counterbalance
with brake release port

Pilot ratio

019 4.2:1

059 11:1

	SPRINGS		
	Adj. pressure range bar (psi)	Pres. increase bar/turn (psi/turn)	Std. setting Q=5 (l/min.) bar (psi)
for X=**019**	60-210 (900-3000)	56 (812)	200 (2900)
for X=**059**	60-250 (900-3600)	70 (1015)	250 (3600)

Port sizes	V1 - V2	C1 - C2	C3
	G 1/2	G 1/2	G 1/4

Tamper resistant cap
ordering code 11.04.23.002
Mat. no. R930000752

Type	Material number
060301019000000C	R930002746
060301059000000	R930001944

Type	Material number

Dimensions

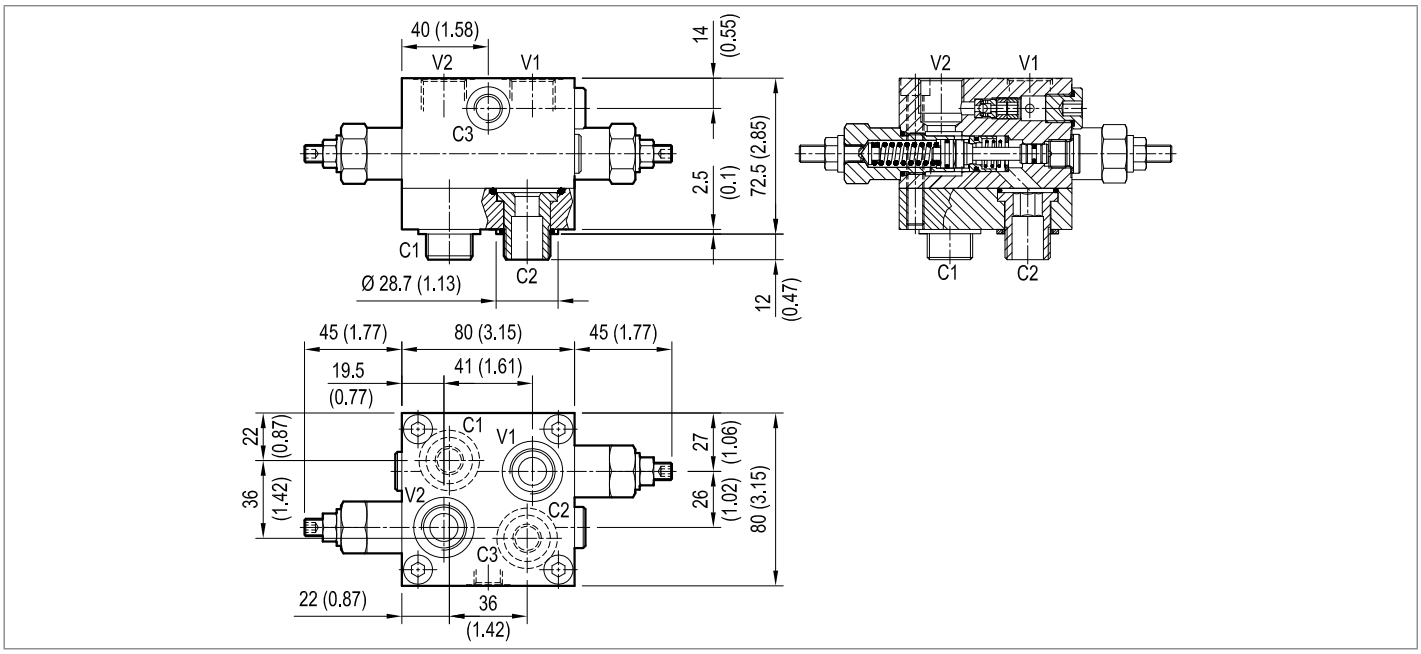

Dual counterbalance with brake release port

VBSO-DE-VF-30-FM

06.03.01 - X

Technical data

Operating pressure	up to 210 bar (3000 psi)
Max. flow	60 l/min. (16 gpm)
Flangeable on SAUER-DANFOSS orbital motors OMS series.	
Relief setting: at least 1.3 times the highest expected load. In addition, both the relief setting and the pilot ratio must be determined in order to achieve building-up of pilot pressure in V1 or V2 high enough to release the brake prior to any valve opening.	
Weight	1.6 kg (3.5 lbs)
Manifold material	Aluminium
Note: aluminium bodies are often strong enough for operating pressures exceeding 210 bar (3000 psi), depending from the fatigue life expected in the specific application. If in doubt, consult our Service Network.	
Fluid	Mineral oil (HL, HLP) according DIN 51524
Fluid temperature range	-30 °C to 100 (-22 to 212 °F)
Viscosity range	10 to 500 mm^2/s (cSt)
Recommended degree of fluid contamination	Class 19/17/14 according to ISO 4406
Other technical data	see data sheet 18350-50

Note: for applications outside these parameters, please consult us.

Description

It provides static and dynamic motion control by regulating the flow IN and OUT of the hydraulic motor, through ports C1 and C2. It includes 2 sections, each one composed by a check and a relief valve pilot assisted by pressure in the opposite line: the check allows free flow into the motor, then locks and prevents reverse movement. With pilot pressure applied at the line across, the pressure setting of the relief is reduced in proportion to the stated ratio until opening and allowing controlled reverse motion. With motor turning and without pilot pressure, the relief function builds up back-pressure at the motor port in order to stop the motion. Back-pressure at V1 or V2 is additive to the pressure setting in all functions. Through port C3, a shuttle valve directs either V1 or V2 line pressure to the spring actuated brake for brake releasing.

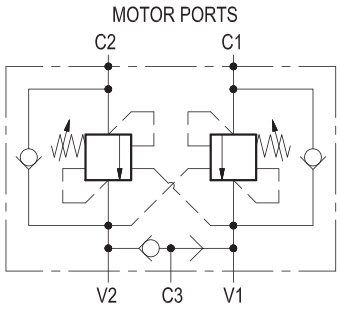

Characteristic curve

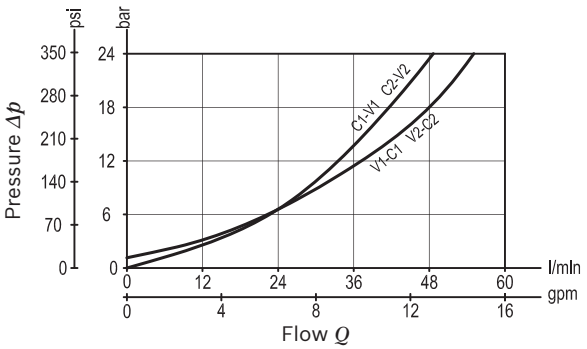

Dimensions [mm (inches)]

Ordering code

06.03.01	X

Dual counterbalance
with brake release port

Pilot ratio

013	4.2:1
023	11:1

	SPRINGS		
	Adj. pressure range bar (psi)	Pres. increase bar/turn (psi/turn)	Std. setting Q=5 (l/min.) bar (psi)
for X=**013**	60-210 (900-3000)	56 (812)	200 (2900)
for X=**023**	60-250 (900-3600)	70 (1015)	250 (3600)

Port sizes	V1 - V2	C1 - C2	C3
	G 1/2	G 1/2	G 1/4

Tamper resistant cap
ordering code 11.04.23.002
Mat. no. R930000752

Type	Material number
06030101300000C	R930002738
06030102300000D	R930002751

Type	Material number

Dimensions

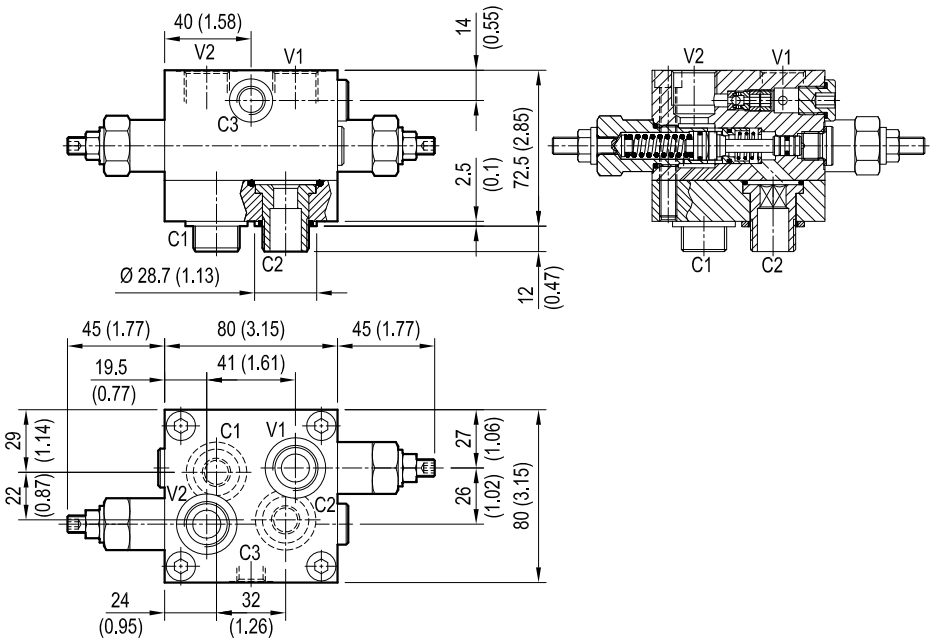

Dual counterbalance and cross over relief with brake release port

VBSO-DE-VF-30-VSDI-FM 06.03.01 - X

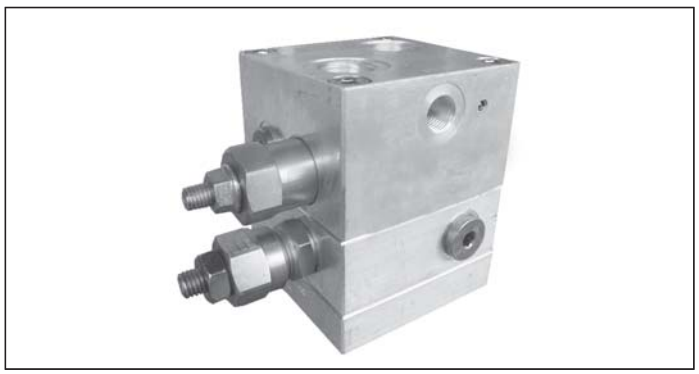

Technical data

Operating pressure	up to 210 bar (3000 psi)
Max. flow	60 l/min. (16 gpm)
Flangeable on SAUER-DANFOSS orbital motors OMP-OMR series.	
Relief setting: at least 1.3 times the highest expected load. In addition, both the relief setting and the pilot ratio must be determined in order to achieve building-up of pilot pressure in V1 or V2 high enough to release the brake prior to any valve opening.	
Weight	2.5 kg (5.5 lbs)
Manifold material	Aluminium
Note: aluminium bodies are often strong enough for operating pressures exceeding 210 bar (3000 psi), depending from the fatigue life expected in the specific application. If in doubt, consult our Service Network.	
Fluid	Mineral oil (HL, HLP) according DIN 51524
Fluid temperature range	-30 °C to 100 (-22 to 212 °F)
Viscosity range	10 to 500 mm^2/s (cSt)
Recommended degree of fluid contamination	Class 19/17/14 according to ISO 4406
Other technical data	see data sheet 18350-50

Note: for applications outside these parameters, please consult us.

Description

It provides static and dynamic motion control by regulating flow and pressure IN and OUT of the hydraulic motor at ports C1 and C2. It includes 2 motion control sections (ref. 2), each one composed by a check and a relief valve pilot assisted by pressure in the opposite line: the check allows free flow into the motor, then locks and prevents reverse movement. With pilot pressure applied at the line across, the pressure setting of the relief is reduced in proportion to the stated ratio until opening and allowing controlled reverse motion. It also includes 2 cross-over direct operated relief sections (ref. 1) which control inlet pressure at starting and motor outlet pressure at stopping. Back-pressure at V1 or V2 is additive to the pressure settings in all functions. Through port C3, a shuttle valve directs either V1 or V2 line pressure to the spring actuated brake for brake releasing.

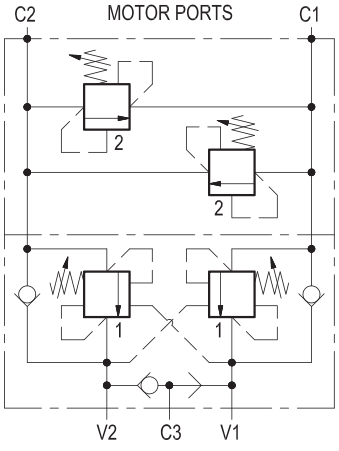

Characteristic curve

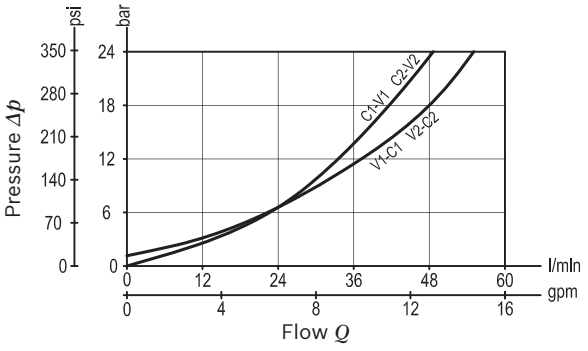

Dimensions [mm (inches)]

Ordering code

06.03.01	X

Dual counterbalance and cross over relief with brake release port

Pilot ratio

018	4.2:1
064	11:1

Port sizes	V1 - V2	C1 - C2	C3
	G 1/2	G 1/2	G 1/4

		SPRINGS		
		Adj. pressure range bar (psi)	Pres. increase bar/turn (psi/turn)	Std. setting Q=5 (l/min.) bar (psi)
for X=**018**	Valve 1	60-210 (900-3000)	56 (812)	200 (2900)
	Valve 2	50-210 (725-3000)	47 (682)	130 (1900)
for X=**064**	Valve 1	60-250 (900-3600)	70 (1015)	250 (3600)
	Valve 2	30-100 (435-1450)	24 (348)	50 (725)

Tamper resistant cap
code 11.04.23.002 Mat.no. R930000752 for Valve 1
code 11.04.23.003 Mat.no. R930000754 for Valve 2

Preferred types

Type	Material number
06030101800000C	R930002745
060301064000000	R930001945

Type	Material number

Dimensions

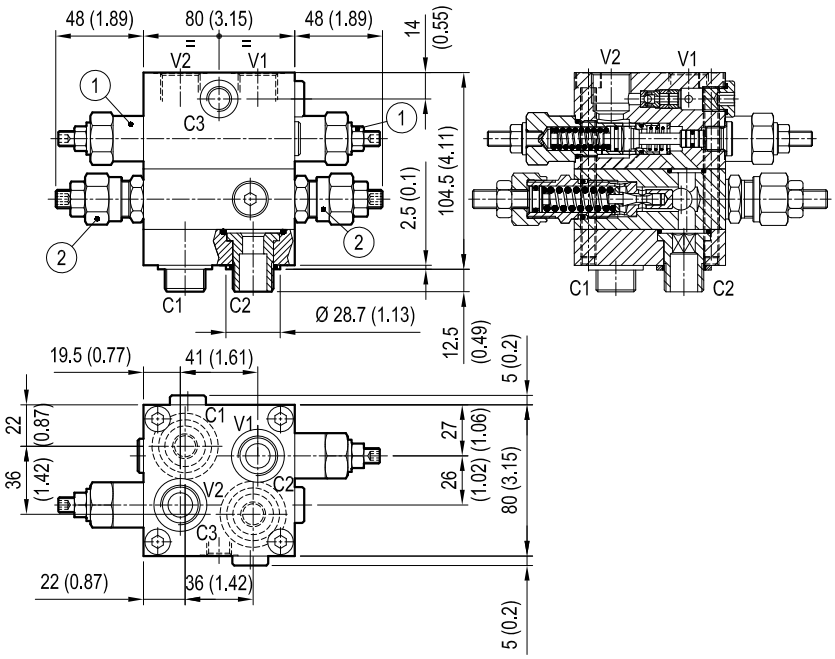

Dual counterbalance with brake release port

VBSO-DE-VF-30-VSDI-FM 06.03.01 - X

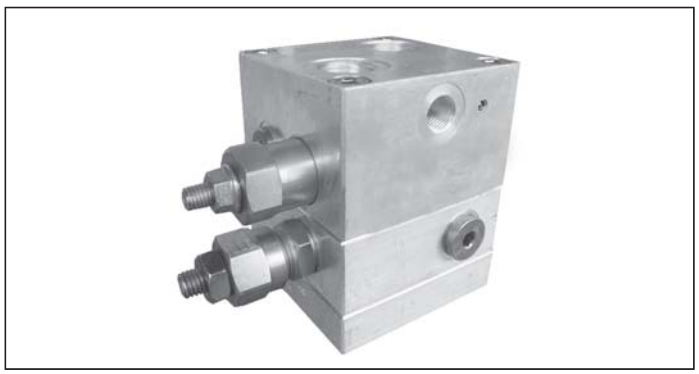

Technical data

Operating pressure	up to 210 bar (3000 psi)
Max. flow	60 l/min. (16 gpm)
Flangeable on SAUER-DANFOSS orbital motors OMS series.	
Relief setting: at least 1.3 times the highest expected load. In addition, both the relief setting and the pilot ratio must be determined in order to achieve building-up of pilot pressure in V1 or V2 high enough to release the brake prior to any valve opening.	
Weight	2.5 kg (5.5 lbs)
Manifold material	Aluminium
Note: aluminium bodies are often strong enough for operating pressures exceeding 210 bar (3000 psi), depending from the fatigue life expected in the specific application. If in doubt, consult our Service Network.	
Fluid	Mineral oil (HL, HLP) according DIN 51524
Fluid temperature range	-30 °C to 100 (-22 to 212 °F)
Viscosity range	10 to 500 mm^2/s (cSt)
Recommended degree of fluid contamination	Class 19/17/14 according to ISO 4406
Other technical data	see data sheet 18350-50

Note: for applications outside these parameters, please consult us.

Description

It provides static and dynamic motion control by regulating flow and pressure IN and OUT of the hydraulic motor at ports C1 and C2. It includes 2 motion control sections (ref. 2), each one composed by a check and a relief valve pilot assisted by pressure in the opposite line: the check allows free flow into the motor, then locks and prevents reverse movement. With pilot pressure applied at the line across, the pressure setting of the relief is reduced in proportion to the stated ratio until opening and allowing controlled reverse motion. It also includes 2 cross-over direct operated relief sections (ref. 1) which control inlet pressure at starting and motor outlet pressure at stopping. Back-pressure at V1 or V2 is additive to the pressure settings in all functions. Through port C3, a shuttle valve directs either V1 or V2 line pressure to the spring actuated brake for brake releasing.

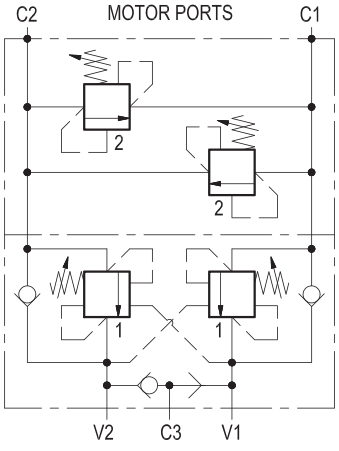

Characteristic curve

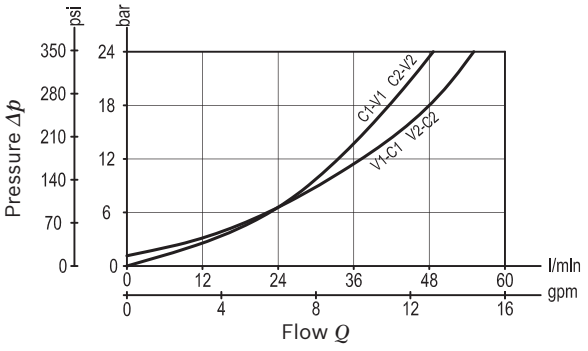

Dimensions [mm (inches)]

Ordering code

06.03.01	X

Dual counterbalance
with brake release port

Pilot ratio

014	4.2:1
017	11:1

Port sizes	V1 - V2	C1 - C2	C3
	G 1/2	G 1/2	G 1/4

		SPRINGS		
		Adj. pressure range bar (psi)	Pres. increase bar/turn (psi/turn)	Std. setting Q=5 (l/min.) bar (psi)
for X=**014**	Valve 1	60-210 (900-3000)	56 (812)	200 (2900)
	Valve 2	50-210 (725-3000)	47 (682)	130 (1900)
for X=**017**	Valve 1	60-250 (900-3600)	70 (1015)	250 (3600)
	Valve 2	30-100 (435-1450)	24 (348)	50 (725)

Tamper resistant cap
code 11.04.23.002 Mat.no. R930000752 for Valve 1
code 11.04.23.003 Mat.no. R930000754 for Valve 2

Preferred types

Type	Material number
06030101400000C	R930002740
060301017000000	R930001946

Type	Material number

Dimensions

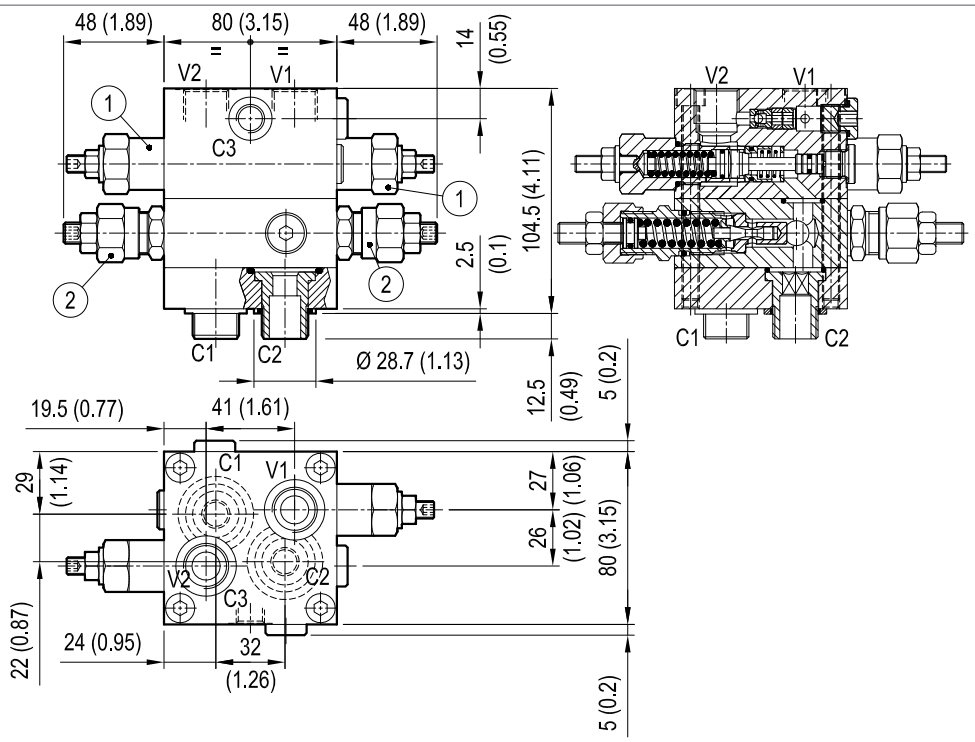

Dual counterbalance with pressure reducer for brake release port

VBSO-DE-VF-30-FM 06.02.08.061

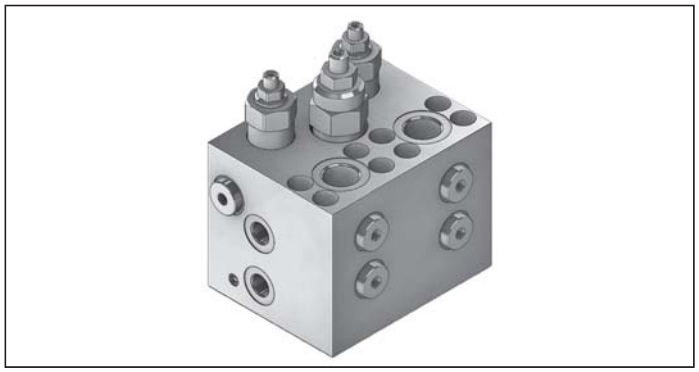

Description

It provides static and dynamic motion control by regulating flow and pressure IN and OUT of the hydraulic motor at ports C1 and C2. It includes 2 motion control sections (ref. 1-2), each one composed by a check and a relief valve pilot assisted by pressure in the opposite line: the check allows free flow into the motor, then locks and prevents reverse movement. With pilot pressure applied at the line across, the pressure setting of the relief is reduced in proportion to the stated ratio until opening and allowing controlled reverse motion. With motor turning and without pilot pressure, the relief function builds up back-pressure at the motor port in order to stop the motion. Back-pressure at V1 or V2 is additive to the pressure settings in all functions. A shuttle valve directs either V1 or V2 line pressure to reducer cartridge (3) and provides “low/constant” pressure for brake releasing through port C3.

Technical data

Operating pressure	up to 210 bar (3000 psi)
Max. flow	60 l/min. (16 gpm)
Flangeable on REXROTH motors A2FE 28-32 series.	
Relief setting: at least 1.3 times the highest expected load.	
Weight	5.7 kg (12.6 lbs)
Manifold material	Anodized aluminium
Note: aluminium bodies are often strong enough for operating pressures exceeding 210 bar (3000 psi), depending from the fatigue life expected in the specific application. If in doubt, consult our Service Network.	
Flange seal kit [1)]	E00000000000020 (R930000144)
Fluid	Mineral oil (HL, HLP) according DIN 51524
Fluid temperature range	-30 °C to 100 (-22 to 212 °F)
Viscosity range	10 to 500 mm^2/s (cSt)
Recommended degree of fluid contamination	Class 19/17/14 according to ISO 4406
Other technical data	see data sheet 18350-50

Note: for applications outside these parameters, please consult us.

[1)] Seals for 5 valves

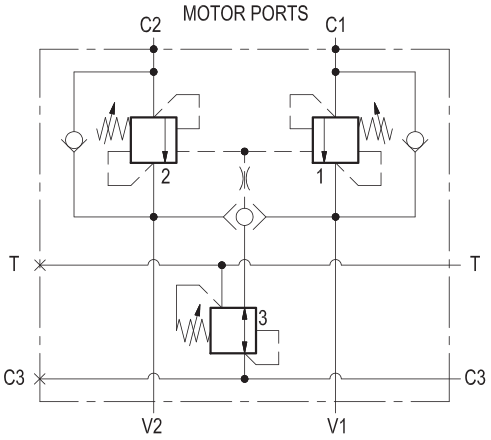

Characteristic curve

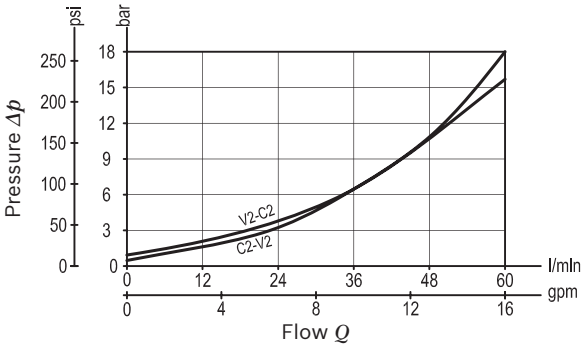

Dimensions [mm (inches)]

Ordering code

06.02.08.061

Dual counterbalance with pressure reducer for brake release port

Pilot ratio

11:1

Port sizes	V1 - V2	C1 - C2	C3 - T
	G 1/2	1/2 SAE 6000	G 1/4

	SPRINGS		
	Adj. pressure range bar (psi)	Pres. increase bar/turn (psi/turn)	Std. setting Q=5 (l/min.) bar (psi)
Valve 1	80-350 (1160-5000)	70 (1015)	350 (5000)
Valve 2	80-350 (1160-5000)	70 (1015)	350 (5000)
Valve 3	28-80 (400-1200)	14 (203)	50 (725)

Tamper resistant cap
code 11.04.23.002 Mat.no. R930000752 for Valve 1-2
code 11.04.23.004 Mat.no. R930001411 for Valve 3

Preferred types

Type	Material number
06020806100000C	R930002732

Type	Material number

Dimensions

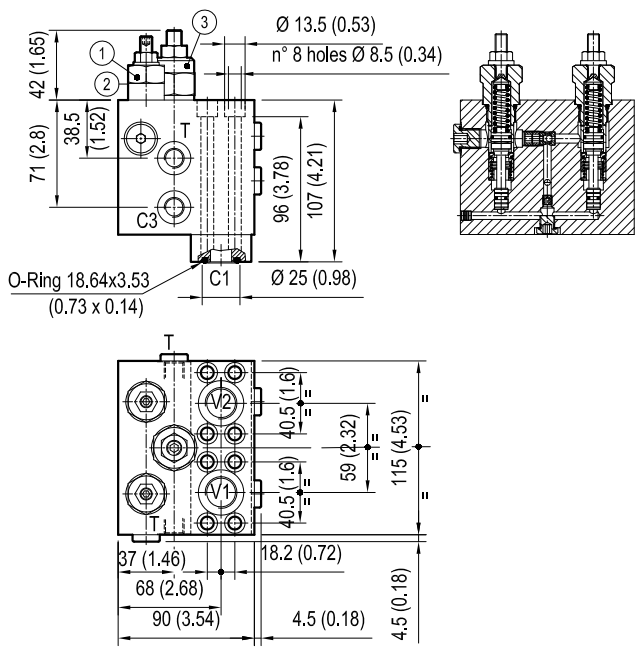

Dual counterbalance with pressure reducer for brake release port

A-VBSN-DE-VF-12A-FM 08.46.35 - X - Y - Z

Description

It provides static and dynamic motion control by regulating flow and pressure IN and OUT of the hydraulic motor at ports C1 and C2. It includes 2 motion control sections (ref. 1 - 2), each one composed by a check and a relief valve pilot assisted by pressure in the opposite line: the check allows free flow into the motor, then locks and prevents reverse movement. With pilot pressure applied at the line across, the pressure setting of the relief is reduced in proportion to the stated ratio until opening and allowing controlled reverse motion. With motor turning and without pilot pressure, the relief function builds up back-pressure at the motor port in order to stop the motion. Back-pressure at V1 or V2 is additive to the pressure settings in all functions. A shuttle valve directs either V1 or V2 line pressure to reducer cartridge (3) and provides “low/ constant” pressure for brake releasing through port BR.

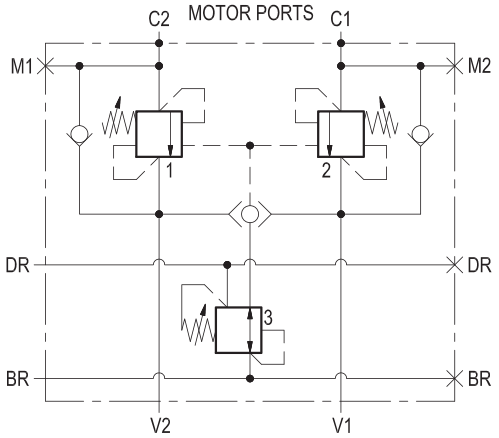

Technical data

Max. operating pressure	350 bar (5000 psi)
Max. flow	120 l/min. (32 gpm)
Flangeable on REXROTH motors A2FE 45-56-63 series.	
Relief setting: at least 1.3 times the highest expected load.	
Weight	11 kg (24.3 lbs)
Manifold material	Zinc plated steel
Flange seal kit [1]	E00000000000002 (R930004532)
Fluid	Mineral oil (HL, HLP) according DIN 51524
Fluid temperature range	-30 °C to 100 (-22 to 212 °F)
Viscosity range	10 to 500 mm²/s (cSt)
Recommended degree of fluid contamination	Class 19/17/14 according to ISO 4406
Other technical data	see data sheet 18350-50

Note: for applications outside these parameters, please consult us.

[1] Seals for 5 valves

Characteristic curve

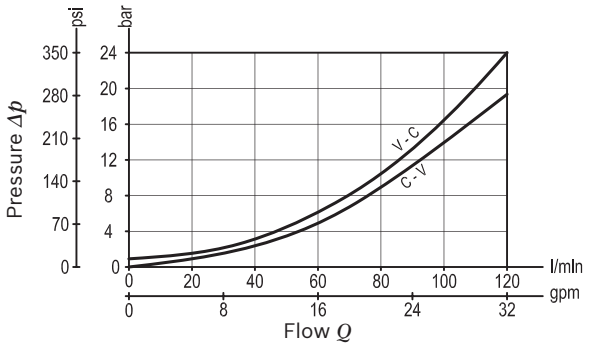

RE 18300-60/03.2010 Bosch Rexroth AG Control Systems

243

Ordering code

08.46.35	X	Y	Z

Dual counterbalance with pressure reducer for brake release port

Pilot ratio

10	8:1

Port sizes	V1 - V2	C1 - C2	DR - BR M1 - M2
04	G 3/4	3/4 SAE 6000	G 1/4

		SPRINGS		
		Adj. pressure range bar (psi)	Pres. increase bar/turn (psi/turn)	Std. setting Q=5 l/min. bar (psi)
40	Valve 1	100-420 (1450-6000)	100 (1450)	380 (5500)
	Valve 2	100-420 (1450-6000)	100 (1450)	380 (5500)
	Valve 3	10-50 (145-725)	7 (102)	50 (725)

Tamper resistant cap
code 11.04.23.002 Mat.no. R930000752 for Valve 1-2
code 11.04.23.004 Mat.no. R930001411 for Valve 3

Preferred types

Type	Material number
08463510044000A	R930055382

Type	Material number

Dimensions

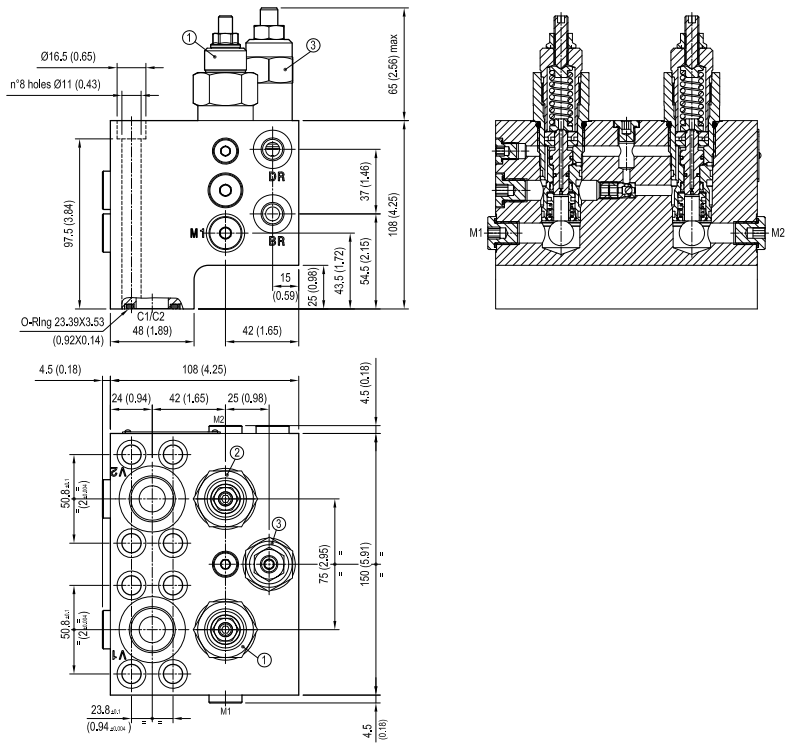

Dual counterbalance with pressure reducer for brake release port

A-VBSN-DE-VF-20A-FM

08.46.32 - X - Y - Z

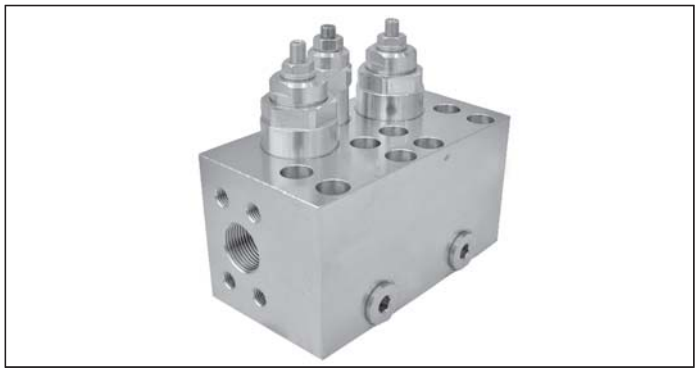

Technical data

Max. operating pressure	350 bar (5000 psi)
Max. flow	320 l/min. (85 gpm)
Flangeable on REXROTH motors A2FE80-90 series.	
Relief setting of valves 1 and 2: at least 1.3 times the highest expected load.	
Weight	13.2 kg (29.1 lbs)
Manifold material	Zinc plated steel
Fluid	Mineral oil (HL, HLP) according DIN 51524
Fluid temperature range	-30 °C to 100 (-22 to 212 °F)
Viscosity range	10 to 500 mm^2/s (cSt)
Recommended degree of fluid contamination	Class 19/17/14 according to ISO 4406
Other technical data	see data sheet 18350-50

Note: for applications outside these parameters, please consult us.

Description

It provides static and dynamic motion control by regulating flow and pressure IN and OUT of the hydraulic motor at ports C1 and C2. It includes 2 motion control sections (ref. 1 - 2), each one composed by a check and a relief valve pilot assisted by pressure in the opposite line: the check allows free flow into the motor, then locks and prevents reverse movement. With pilot pressure applied at the line across, the pressure setting of the relief is reduced in proportion to the stated ratio until opening and allowing controlled reverse motion. With motor turning and without pilot pressure, the relief function builds up back-pressure at the motor port in order to stop the motion. Back-pressure at V1 or V2 is additive to the pressure settings in all functions. A shuttle valve directs either V1 or V2 line pressure to reducer cartridge (3) and provides “low/constant” pressure for brake releasing through port BR.

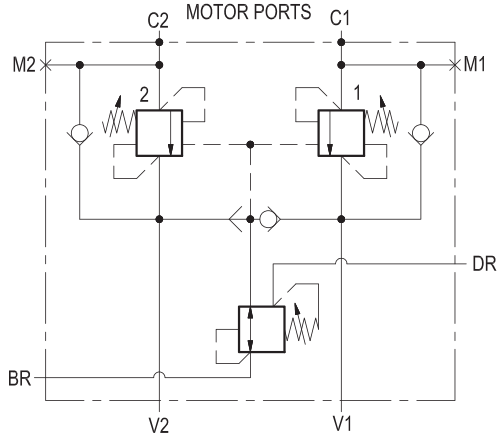

Characteristic curve

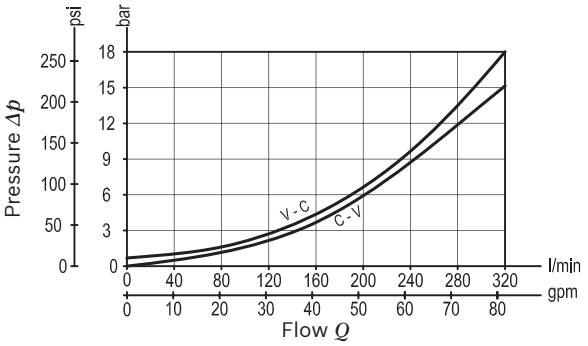

Ordering code

08.46.32	X	Y	Z

Dual counterbalance with pressure reducer for brake release port

Pilot ratio	
03	4:1

Port sizes	V1 - V2	C1 - C2	DR - BR M1 - M2
73	1 SAE 6000	1 SAE 6000	G 1/4

		SPRINGS		
		Adj. pressure range bar (psi)	Pres. increase bar/turn (psi/turn)	Std. setting Q=5 l/min. bar (psi)
35	Valve 1	140-350 (2000-5000)	108 (1566)	350 (5000)
	Valve 2	140-350 (2000-5000)	108 (1566)	350 (5000)
	Valve 3	10-50 (145-725)	7 (102)	35/40 (500/580)

Preferred types

Type	Material number
084632037335000	R930003631

Type	Material number

Dimensions

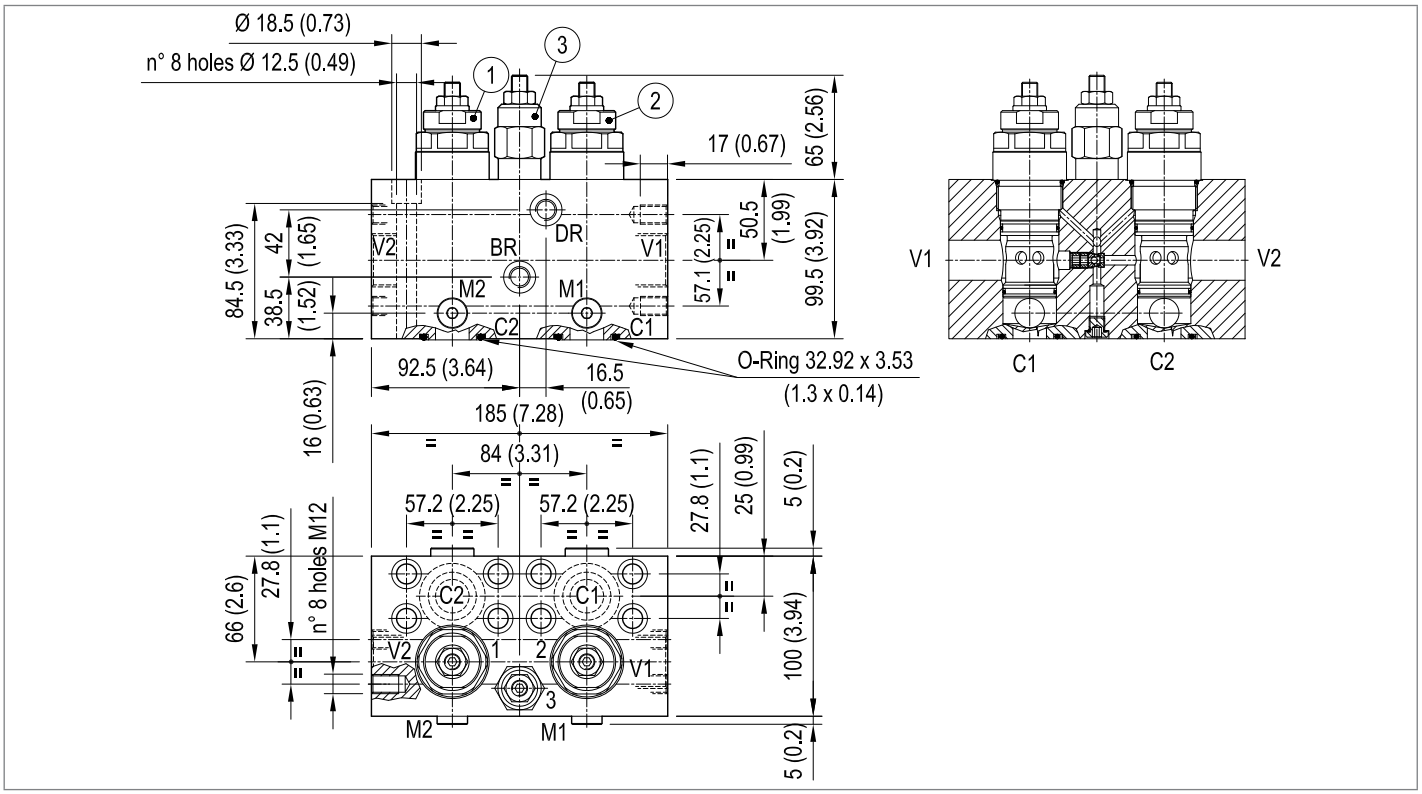

Dual counterbalance with pressure reducer for brake release port

A-VBSN-DE-VF-20A-FM

08.46.33 - X - Y - Z

Description

It provides static and dynamic motion control by regulating flow and pressure IN and OUT of the hydraulic motor at ports C1 and C2. It includes 2 motion control sections (ref. 1-2), each one composed by a check and a relief valve pilot assisted by pressure in the opposite line: the check allows free flow into the motor, then locks and prevents reverse movement. With pilot pressure applied at the line across, the pressure setting of the relief is reduced in proportion to the stated ratio until opening and allowing controlled reverse motion. With motor turning and without pilot pressure, the relief function builds up back-pressure at the motor port in order to stop the motion. Back-pressure at V1 or V2 is additive to the pressure settings in all functions. A shuttle valve directs either V1 or V2 line pressure to reducer cartridge (3) and provides “low/constant” pressure for brake releasing through port BR.

Technical data

Max. operating pressure	350 bar (5000 psi)
Max. flow	320 l/min. (85 gpm)
Flangeable on REXROTH motors A2FE107-125 series.	
Relief setting: at least 1.3 times the highest expected load.	
Weight	12.6 kg (27.7 lbs)
Manifold material	Zinc plated steel
Flange sel kit [1)]	E00000000000004 (R930004534)
Fluid	Mineral oil (HL, HLP) according DIN 51524
Fluid temperature range	-30 °C to 100 (-22 to 212 °F)
Viscosity range	10 to 500 mm^2/s (cSt)
Recommended degree of fluid contamination	Class 19/17/14 according to ISO 4406
Other technical data	see data sheet 18350-50

Note: for applications outside these parameters, please consult us.

[1)] Seals for 5 valves

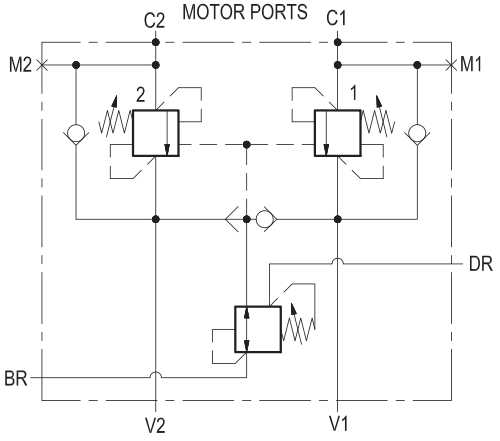

Characteristic curve

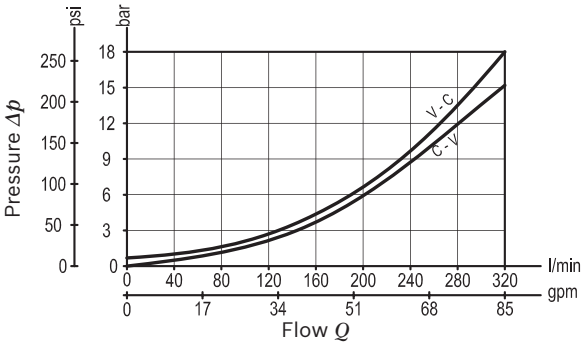

Ordering code

08.46.33	X	Y	Z

Dual counterbalance with pressure reducer for brake release port

Pilot ratio

03	4:1
10	8:1

			SPRINGS		
			Adj. pressure range bar (psi)	Pres. increase bar/turn (psi/turn)	Std. setting Q=5 l/min. bar (psi)
35	for X=03	Valve 1-2	140-350 (2000-5000)	108 (1566)	350 (5000)
		Valve 3	10-50 (145-725)	7 (102)	35/40 (500/580)
	for X=10	Valve 1-2	140-420 (2000-6000)	135 (1958)	350 (5000)
		Valve 3	10-50 (145-725)	7 (102)	35/40 (500/580)

Port sizes	V1 - V2	C1 - C2	DR - BR M1 - M2
73	1 SAE 6000	1-1/4 SAE 6000	G 1/4

Tamper resistant cap
code 11.04.23.004 Mat.no. R930001411
for Valve 1-2-3

Preferred types

Type	Material number
084633037335000	R930003633
084633107335000	R930003634

Type	Material number

Dimensions

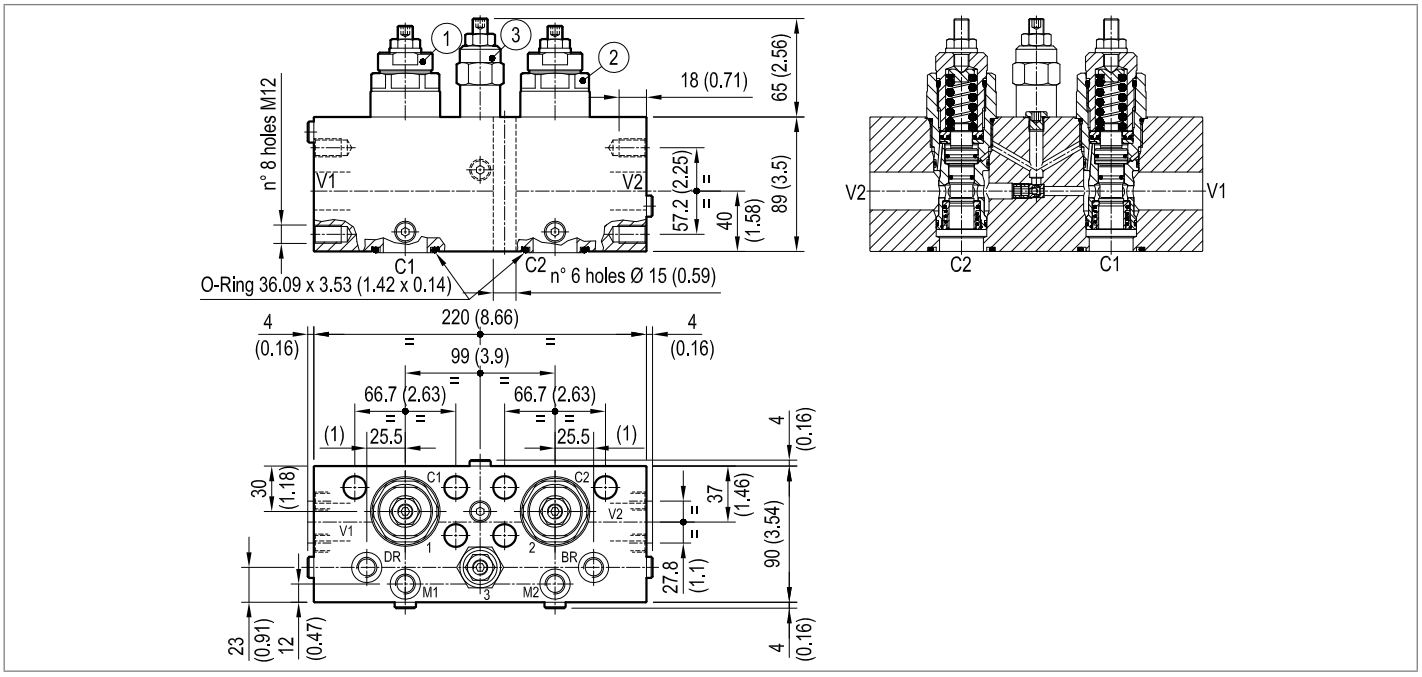

Load holding/motion control

Valves for motors: motion control

Designation	Description	Ports	Code	Data sheet	Page
Motion control, standard configuration	VAA-B-SIC50-38	G 3/8	057109X02Z	18308-85	251
Motion control, standard configuration	VAA-B-SICN-ST-50	G 3/8	057144X02Z	18308-72	253
Motion control, standard configuration	VAA-B-SICN-ST-150	G 3/4	057144X04Z	18308-73	255
Motion control, standard configuration	VAA-B-SICN-ST-250	G 1	057144X05Z	18308-74	257
Motion control, with brake release port	VAA-B-SICN-ST-VF-50	G 3/8	057145X02Z	18308-75	259
Motion control, with brake release port	VAA-B-SICN-ST-VF-150	G 3/4	057145X04Z	18308-76	261
Motion control, with brake release port	VAA-B-SICN-ST-VF-250	G 1	057145X05Z	18308-77	263
Motion control, dual setting	VAA-B-SICN-PDRM-50	G 3/8	057146X02Z	18308-78	265
Motion control, dual setting	VAA-B-SICN-PDRM-150	G 3/4	057146X04Z	18308-79	267
Motion control, dual setting	VAA-B-SICN-PDRM-250	G 1	057146X05Z	18308-80	269
Motion control, dual setting with brake release port	VAA-B-SICN-PDRM-VF-50	G 3/8	057147X02Z	18308-81	271
Motion control, dual setting with brake release port	VAA-B-SICN-PDRM-VF-150	G 3/4	057147X04Z	18308-82	273
Motion control, dual setting with brake release port	VAA-B-SICN-PDRM-VF-250	G 1	057147X05Z	18308-83	275

Motion control

VAA-B-SIC50-38

05.71.09 - X - 02 - Z

Technical data

Operating pressure	up to 210 bar (3000 psi)
Max. flow	40 l/min. (11 gpm)
Weight	2.8 kg (6.2 psi)
Manifold material	Aluminium
Note: aluminium bodies are often strong enough for operating pressures exceeding 210 bar (3000 psi), depending from the fatigue life expected in the specific application. If in doubt, consult our Service Network.	
Fluid	Mineral oil (HL, HLP) according DIN 51524
Fluid temperature range	-30 °C to 100 (-22 to 212 °F)
Viscosity range	10 to 500 mm^2/s (cSt)
Recommended degree of fluid contamination	Class 19/17/14 according to ISO 4406
Other technical data	see data sheet 18350-50
Relief setting: at least 1.3 times the highest expected load.	

Note: for applications outside these parameters, please consult us.

Description

It provides static and dynamic motion control by regulating flow and pressure IN and OUT of the hydraulic motor at ports C1 and C2. When installed close to the motor, it can stop runaway in case of hose failure. The check sections allow free flow into the motor and prevent reverse movement; the pilot assisted relief valves control the movement when pilot pressure is applied. A system of check valves allows cross line relief; an optional make-up port (T) allows to compensate for any volume change.

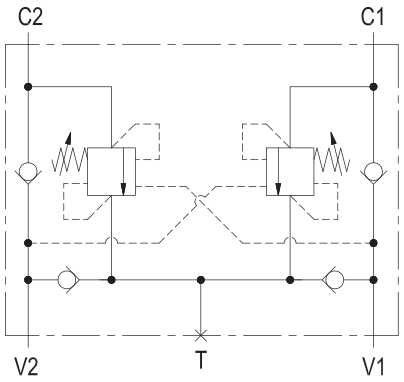

Characteristic curve

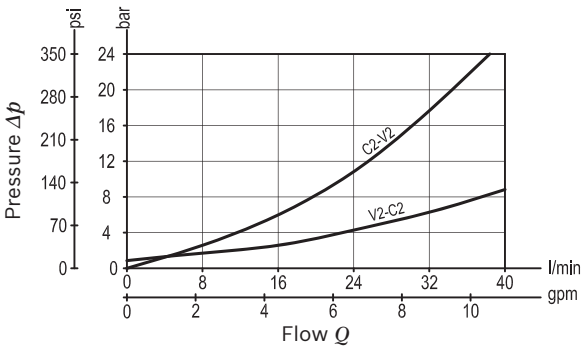

Dimensions [mm (inches)]

Ordering code

05.71.09	X	02	Z

Motion control

Pilot ratio

10 3:1

	SPRINGS		
	Adj. pressure range bar (psi)	Pres. increase bar/turn (psi/turn)	Std. setting Q=5 (l/min) bar (psi)
35	100-350 (1450-5000)	100 (1450)	150 (2200)

Tamper resistant cap code
ordering code 03.05.01.001
Mat. no. R930000470

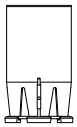

Port sizes	V1 - V2	C1 - C2	T
	G 3/8	G 3/8	G 3/8

Preferred types

Type	Material number
05710910023500E	R930006884

Type	Material number

Dimensions

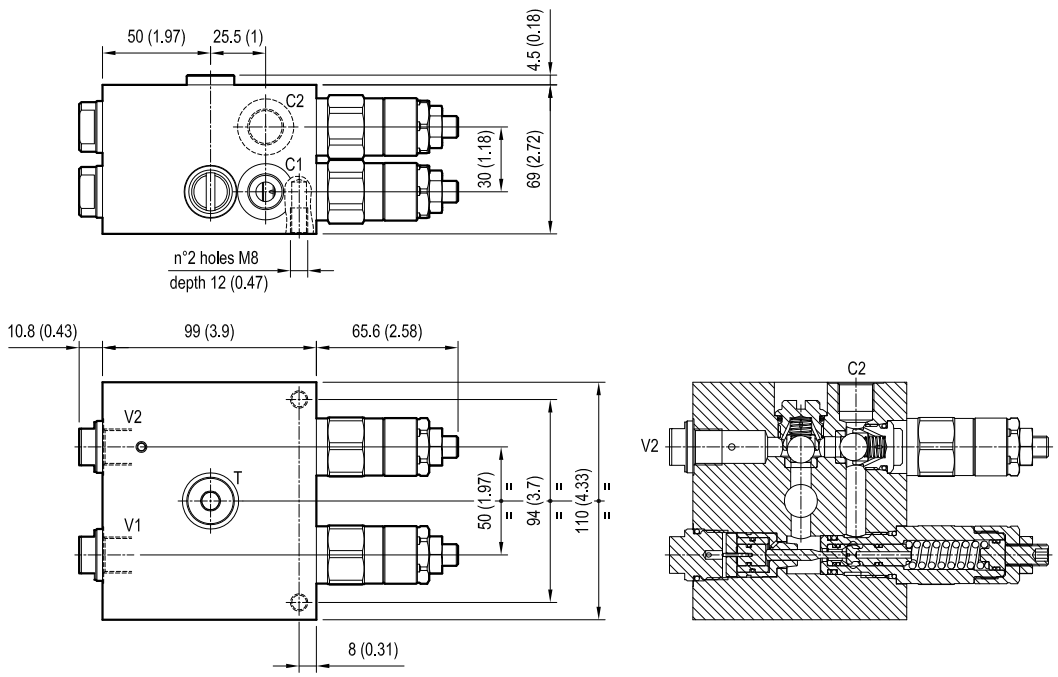

Motion control

VAA-B-SICN-ST-50

05.71.44 - X - 02 - Z

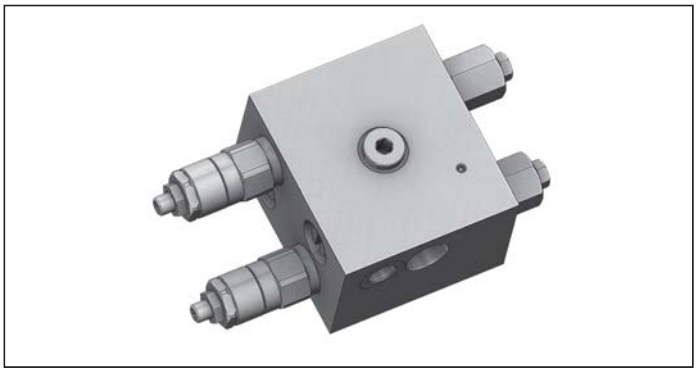

Technical data

Operating pressure	up to 210 bar (3000 psi)
Max. flow	40 l/min. (11 gpm)
Weight	3.5 kg (7.7 psi)
Manifold material	Aluminium
Note: aluminium bodies are often strong enough for operating pressures exceeding 210 bar (3000 psi), depending from the fatigue life expected in the specific application. If in doubt, consult our Service Network.	
Fluid	Mineral oil (HL, HLP) according DIN 51524
Fluid temperature range	-30 °C to 100 (-22 to 212 °F)
Viscosity range	10 to 500 mm^2/s (cSt)
Recommended degree of fluid contamination	Class 19/17/14 according to ISO 4406
Other technical data	see data sheet 18350-50
Relief setting: at least 1.3 times the highest expected load.	

Note: for applications outside these parameters, please consult us.

Description

It provides static and dynamic motion control by regulating flow and pressure IN and OUT of the hydraulic motor at ports C1 and C2. When installed close to the motor, it can stop runaway in case of hose failure. The check sections allow free flow into the motor and prevent reverse movement; the pilot assisted relief valves control the movement when pilot pressure is applied. A system of check valves allows cross line relief; an optional make-up port (T) allows to compensate for any volume change.

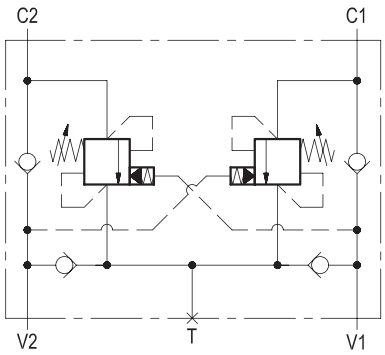

Characteristic curve

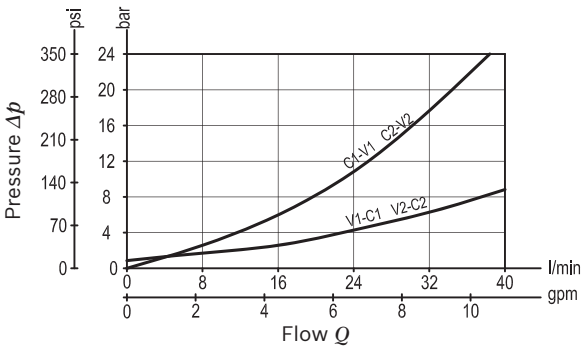

Ordering code

05.71.44	X	02	Z

Motion control

Pilot ratio

37 9.1 : 1

Port sizes	V1 - V2	C1 - C2	T
	G 3/8	G 3/8	G 3/8

	SPRINGS		
	Adj. pressure range bar (psi)	Pres. increase bar/turn (psi/turn)	Std. setting Q=5 (l/min) bar (psi)
20	60-180 (870-2600)	60 (870)	150 (2200)
35	100-350 (1450-5000)	100 (1450)	150 (2200)

Tamper resistant cap code
ordering code 03.05.01.001
Mat. no. R930000470

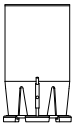

Preferred types

Type	Material number
05714437022000A	R930006875
05714437023500A	R930006876

Type	Material number

Dimensions

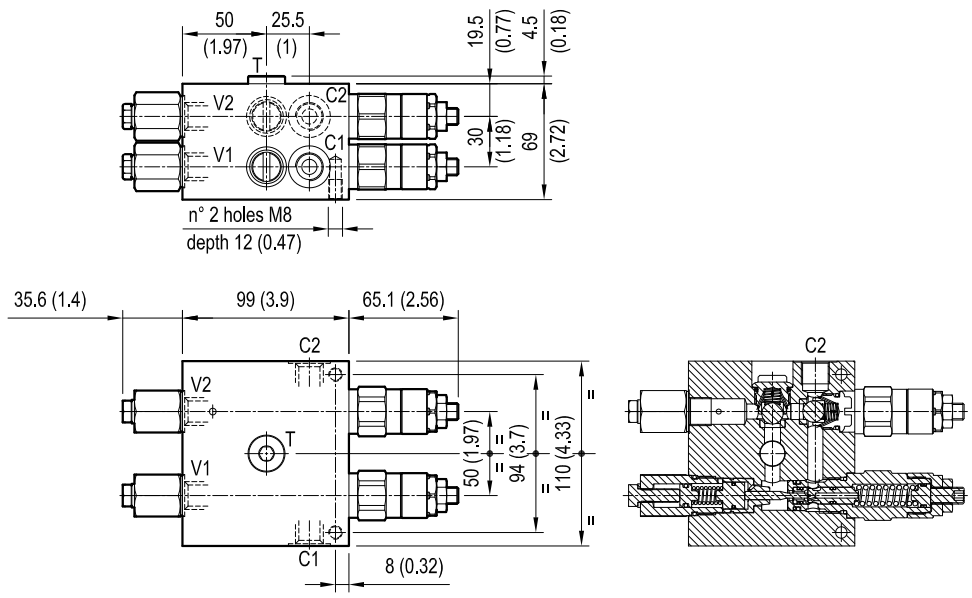

Motion control

VAA-B-SICN-ST-150

05.71.44 - X - 04 - Z

Technical data

Operating pressure	up to 210 bar (3000 psi)
Max. flow	120 l/min. (32 gpm)
Weight	5.7 kg (12.5 psi)
Manifold material	Aluminium
Note: aluminium bodies are often strong enough for operating pressures exceeding 210 bar (3000 psi), depending from the fatigue life expected in the specific application. If in doubt, consult our Service Network.	
Fluid	Mineral oil (HL, HLP) according DIN 51524
Fluid temperature range	-30 °C to 100 (-22 to 212 °F)
Viscosity range	10 to 500 mm^2/s (cSt)
Recommended degree of fluid contamination	Class 19/17/14 according to ISO 4406
Other technical data	see data sheet 18350-50
Relief setting: at least 1.3 times the highest expected load.	

Note: for applications outside these parameters, please consult us.

Description

It provides static and dynamic motion control by regulating flow and pressure IN and OUT of the hydraulic motor at ports C1 and C2. When installed close to the motor, it can stop runaway in case of hose failure. The check sections allow free flow into the motor and prevent reverse movement; the pilot assisted relief valves control the movement when pilot pressure is applied. A system of check valves allows cross line relief; an optional make-up port (T) allows to compensate for any volume change.

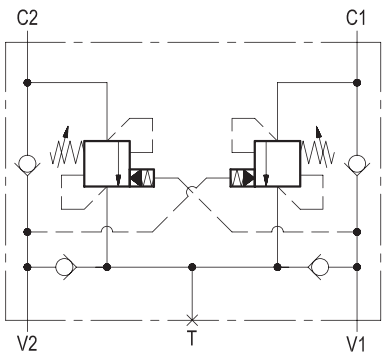

Characteristic curve

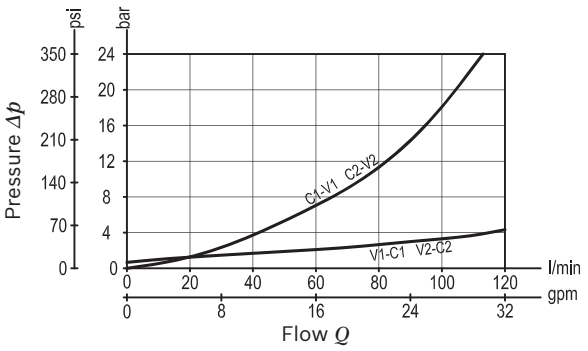

Ordering code

05.71.44	X	04	Z

Motion control

Pilot ratio

03	7.6 :1
10	3:1

Port sizes	V1 - V2	C1 - C2	T
	G 3/4	G 3/4	G 1/2

	SPRINGS		
	Adj. pressure range bar (psi)	Pres. increase bar/turn (psi/turn)	Std. setting Q=5 (l/min) bar (psi)
35	100-350 (1450-5000)	105 (1523)	150 (2200)

Tamper resistant cap code
ordering code 03.05.01.001
Mat. no. R930000470

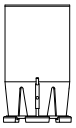

Preferred types

Type	Material number
05714403043500B	R930006932
05714410043500B	R930006955

Type	Material number

Dimensions

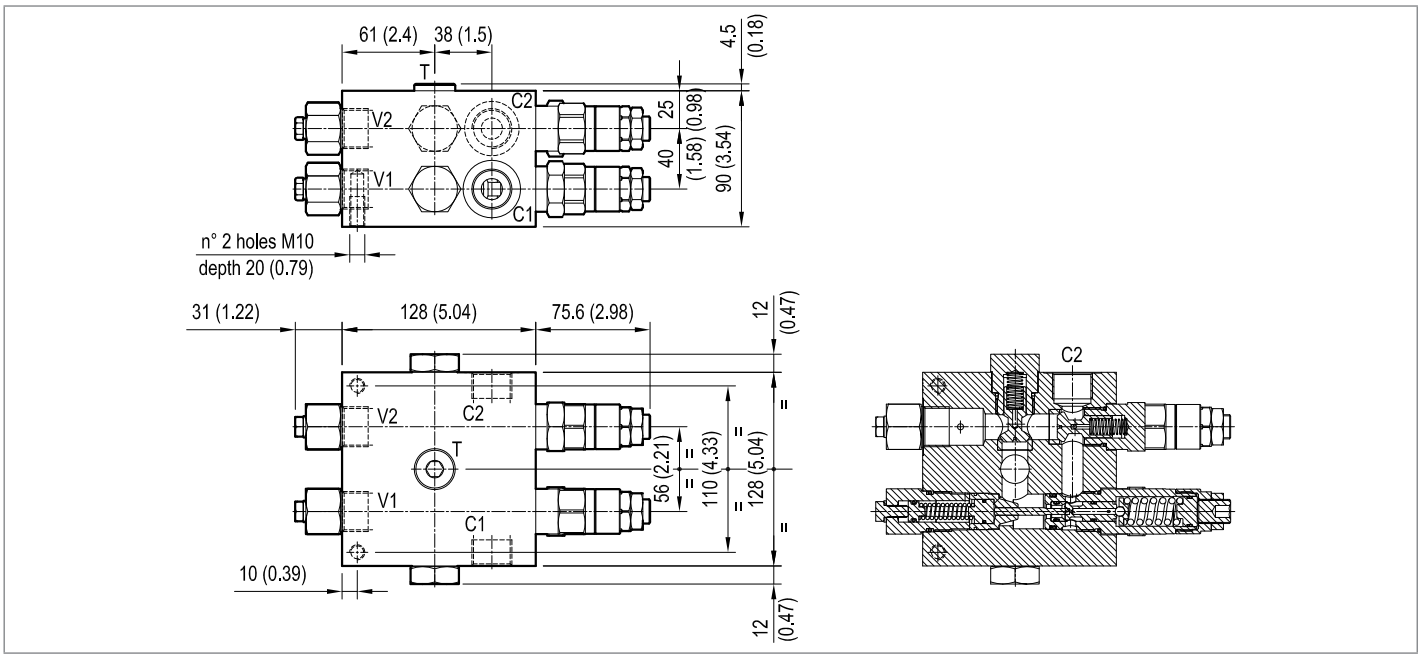

Motion control

VAA-B-SICN-ST-250

05.71.44 - X - 05 - Z

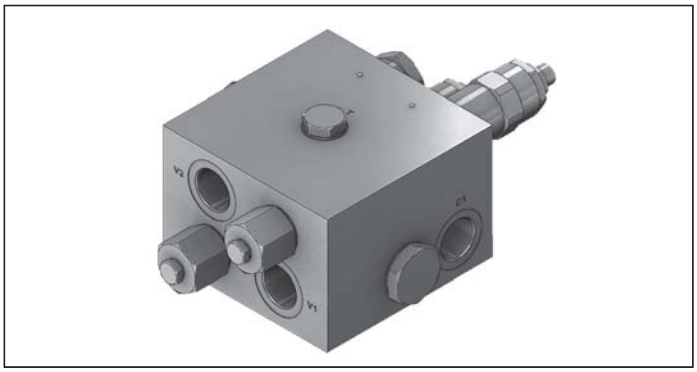

Technical data

Operating pressure	up to 210 bar (3000 psi)
Max. flow	200 l/min. (53 gpm)
Weight	10.8 kg (23.8 psi)
Manifold material	Aluminium
Note: aluminium bodies are often strong enough for operating pressures exceeding 210 bar (3000 psi), depending from the fatigue life expected in the specific application. If in doubt, consult our Service Network.	
Fluid	Mineral oil (HL, HLP) according DIN 51524
Fluid temperature range	-30 °C to 100 (-22 to 212 °F)
Viscosity range	10 to 500 mm^2/s (cSt)
Recommended degree of fluid contamination	Class 19/17/14 according to ISO 4406
Other technical data	see data sheet 18350-50
Relief setting: at least 1.3 times the highest expected load.	

Note: for applications outside these parameters, please consult us.

Description

It provides static and dynamic motion control by regulating flow and pressure IN and OUT of the hydraulic motor at ports C1 and C2. When installed close to the motor, it can stop runaway in case of hose failure. The check sections allow free flow into the motor and prevent reverse movement; the pilot assisted relief valves control the movement when pilot pressure is applied. A system of check valves allows cross line relief; an optional make-up port (T) allows to compensate for any volume change.

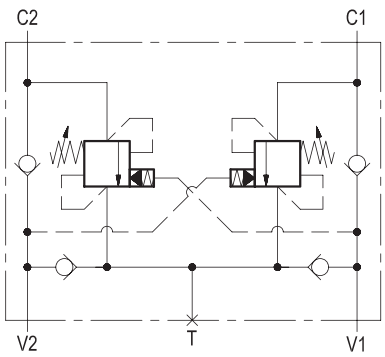

Characteristic curve

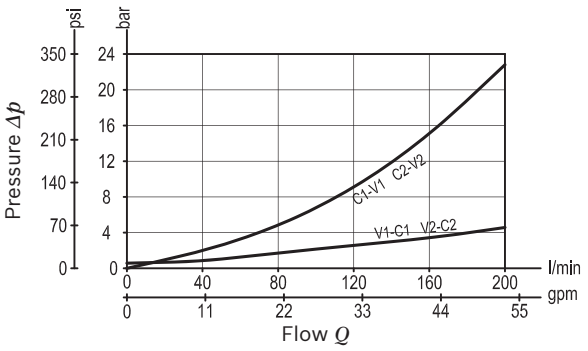

Ordering code

05.71.44	X	05	Z

Motion control

Pilot ratio

03	8:1
10	2.8:1

Port sizes	V1 - V2	C1 - C2	T
	G 1	G 1	G 5/8

	SPRINGS		
	Adj. pressure range bar (psi)	Pres. increase bar/turn (psi/turn)	Std. setting Q=5 (l/min) bar (psi)
35	100-350 (1450-5000)	62 (899)	150 (2200)

Tamper resistant cap code
ordering code 03.05.01.005
Mat. no. R930052041

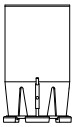

Preferred types

Type	Material number
05714403053500B	R930006908
05714410053500B	R930006903

Type	Material number

Dimensions

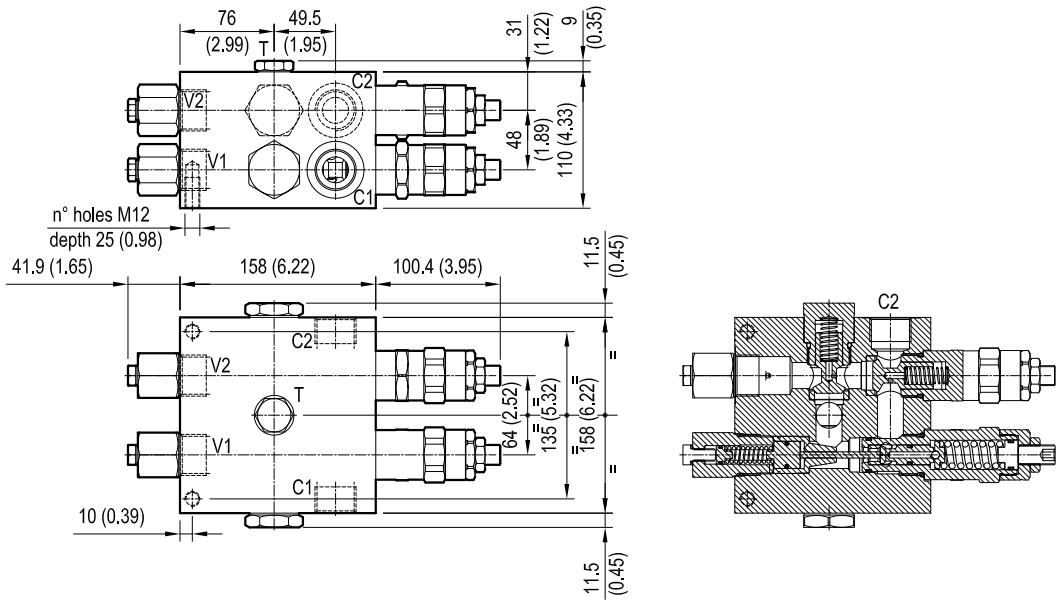

Motion control with brake release port

VAA-B-SICN-ST-VF-50 05.71.45 - X - 02 - Z

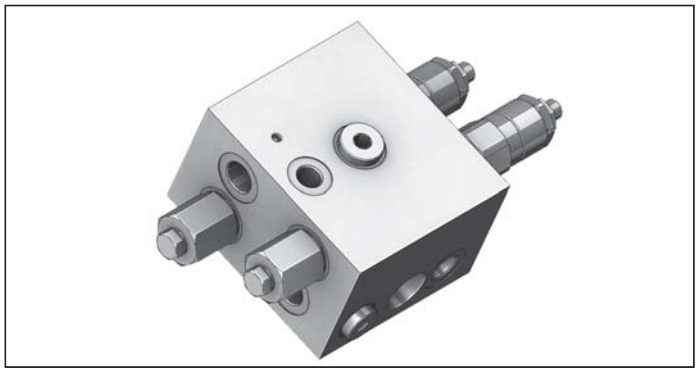

Description

It provides static and dynamic motion control by regulating flow and pressure IN and OUT of the hydraulic motor at ports C1 and C2. When installed close to the motor, it can stop runaway in case of hose failure. The check sections allow free flow into the motor and prevent reverse movement; the pilot assisted relief valves control the movement when pilot pressure is applied. A system of check valves allows cross line relief; an optional make-up port (T) allows to compensate for any volume change. Through port C3, a shuttle valve directs either V1 or V2 pressure to the spring actuated brake for brake releasing.

Technical data

Operating pressure	up to 210 bar (3000 psi)
Max. flow	40 l/min. (11 gpm)
Weight	3 kg (6.6 psi)
Manifold material	Aluminium
Note: aluminium bodies are often strong enough for operating pressures exceeding 210 bar (3000 psi), depending from the fatigue life expected in the specific application. If in doubt, consult our Service Network.	
Fluid	Mineral oil (HL, HLP) according DIN 51524
Fluid temperature range	-30 °C to 100 (-22 to 212 °F)
Viscosity range	10 to 500 mm^2/s (cSt)
Recommended degree of fluid contamination	Class 19/17/14 according to ISO 4406
Other technical data	see data sheet 18350-50
Relief setting: at least 1.3 times the highest expected load.	

Note: for applications outside these parameters, please consult us.

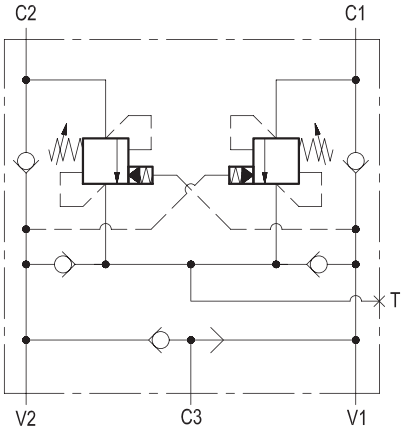

Characteristic curve

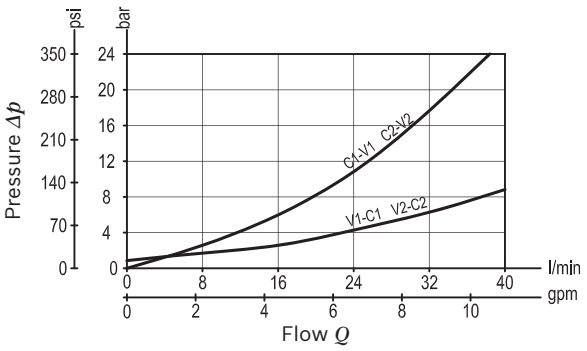

RE 18300-75/03.2010 Bosch Rexroth AG Control Sp.A.

259

Ordering code

05.71.45	X	02	Z

Motion control
with brake release port

Pilot ratio

37 9.1 : 1

	SPRINGS		
	Adj. pressure range bar (psi)	Pres. increase bar/turn (psi/turn)	Std. setting Q=5 (l/min) bar (psi)
20	60-210 (870-3000)	60 (870)	150 (2200)
35	100-350 (1450-5000)	100 (1450)	150 (2200)

Port sizes	V1 - V2	C1 - C2	C3	T
	G 3/8	G 3/8	G 1/4	G 3/8

Tamper resistant cap code
ordering code 03.05.01.001
Mat. no. R930000470

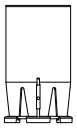

Preferred types

Type	Material number
05714537022000A	R930006868
05714537023500A	R930006866

Type	Material number

Dimensions

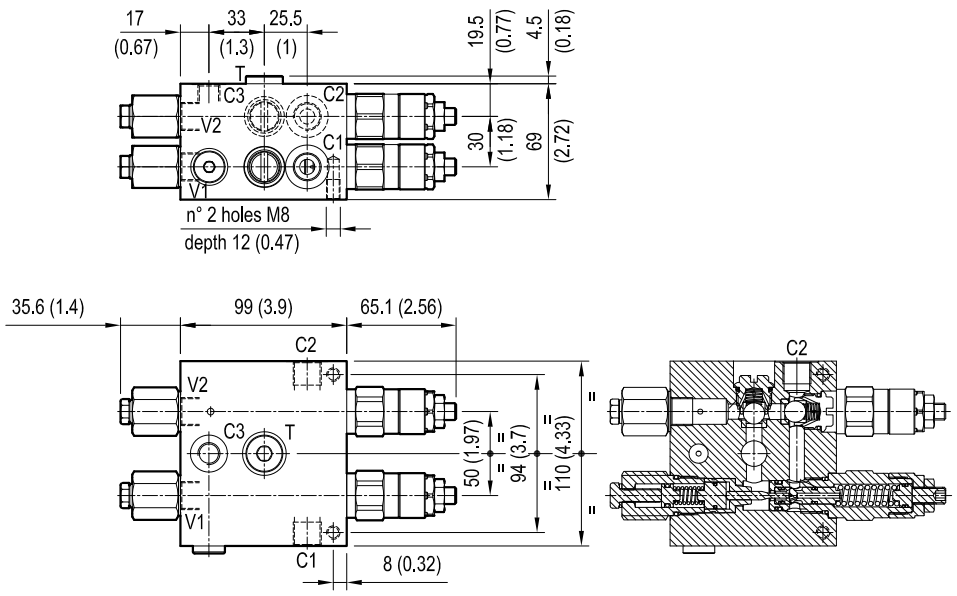

Motion control
with brake release port

VAA-B-SICN-ST-VF-150

05.71.45 - X - 04 - Z

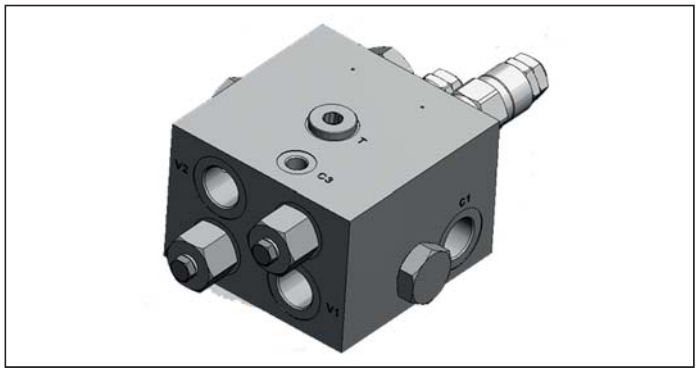

Description

It provides static and dynamic motion control by regulating flow and pressure IN and OUT of the hydraulic motor at ports C1 and C2. When installed close to the motor, it can stop runaway in case of hose failure. The check sections allow free flow into the motor and prevent reverse movement; the pilot assisted relief valves control the movement when pilot pressure is applied. A system of check valves allows cross line relief; an optional make-up port (T) allows to compensate for any volume change. Through port C3, a shuttle valve directs either V1 or V2 pressure to the spring actuated brake for brake releasing.

Technical data

Operating pressure	up to 210 bar (3000 psi)
Max. flow	120 l/min. (32 gpm)
Weight	5.6 kg (12.3 psi)
Manifold material	Aluminium
Note: aluminium bodies are often strong enough for operating pressures exceeding 210 bar (3000 psi), depending from the fatigue life expected in the specific application. If in doubt, consult our Service Network.	
Fluid	Mineral oil (HL, HLP) according DIN 51524
Fluid temperature range	-30 °C to 100 (-22 to 212 °F)
Viscosity range	10 to 500 mm^2/s (cSt)
Recommended degree of fluid contamination	Class 19/17/14 according to ISO 4406
Other technical data	see data sheet 18350-50
Relief setting: at least 1.3 times the highest expected load.	

Note: for applications outside these parameters, please consult us.

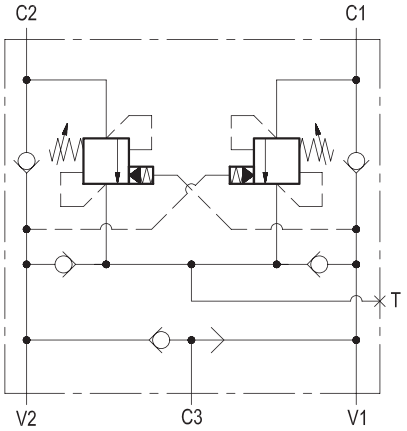

Characteristic curve

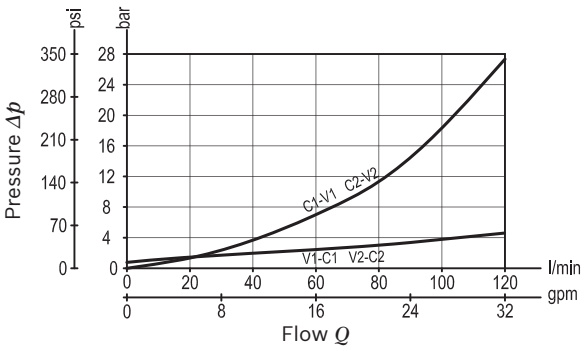

Ordering code

05.71.45	X	04	Z

Motion control
with brake release port

Pilot ratio

03	7:6:1
10	3:1

Port sizes	V1 - V2	C1 - C2	T	C3
	G 3/4	G 3/4	G 1/2	G 1/4

	SPRINGS		
	Adj. pressure range bar (psi)	Pres. increase bar/turn (psi/turn)	Std. setting Q=5 (l/min) bar (psi)
35	100-350 (1450-5000)	105 (1523)	150 (2200)

Tamper resistant cap code
ordering code 03.05.01.001
Mat. no. R930000470

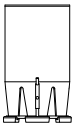

Preferred types

Type	Material number
05714503043500B	R930006933
05714510043500B	R930006791

Type	Material number

Dimensions

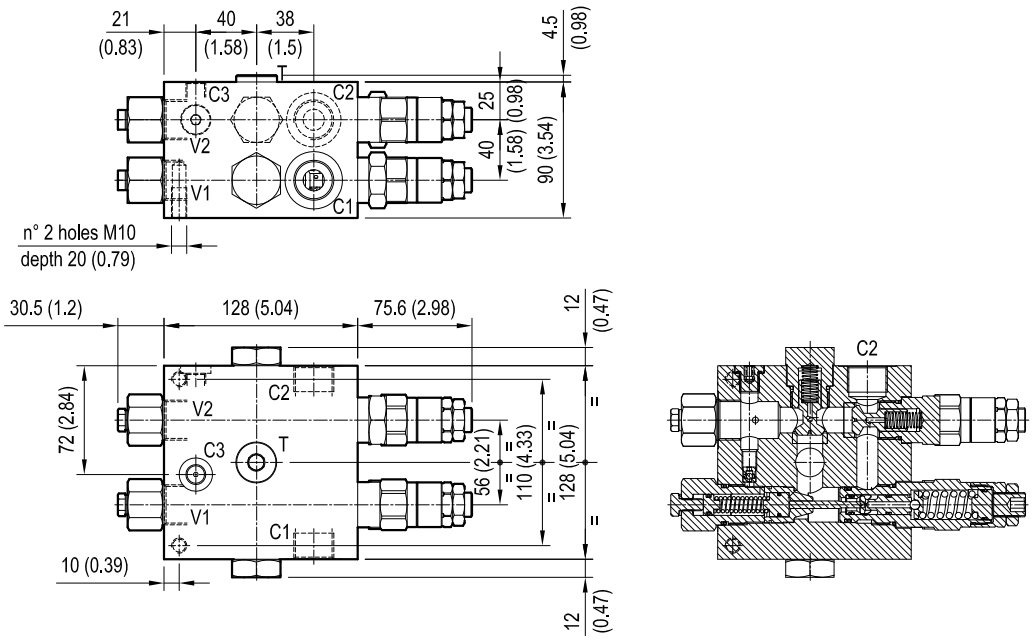

Motion control with brake release port

VAA-B-SICN-ST-VF-250

05.71.45 - X - 05 - Z

Description

It provides static and dynamic motion control by regulating flow and pressure IN and OUT of the hydraulic motor at ports C1 and C2. When installed close to the motor, it can stop runaway in case of hose failure. The check sections allow free flow into the motor and prevent reverse movement; the pilot assisted relief valves control the movement when pilot pressure is applied. A system of check valves allows cross line relief; an optional make-up port (T) allows to compensate for any volume change. Through port C3, a shuttle valve directs either V1 or V2 pressure to the spring actuated brake for brake releasing.

Technical data

Operating pressure	up to 210 bar (3000 psi)
Max. flow	200 l/min. (53 gpm)
Weight	10.9 kg (24 psi)
Manifold material	Aluminium
Note: aluminium bodies are often strong enough for operating pressures exceeding 210 bar (3000 psi), depending from the fatigue life expected in the specific application. If in doubt, consult our Service Network.	
Fluid	Mineral oil (HL, HLP) according DIN 51524
Fluid temperature range	-30 °C to 100 (-22 to 212 °F)
Viscosity range	10 to 500 mm^2/s (cSt)
Recommended degree of fluid contamination	Class 19/17/14 according to ISO 4406
Other technical data	see data sheet 18350-50
Relief setting: at least 1.3 times the highest expected load.	

Note: for applications outside these parameters, please consult us.

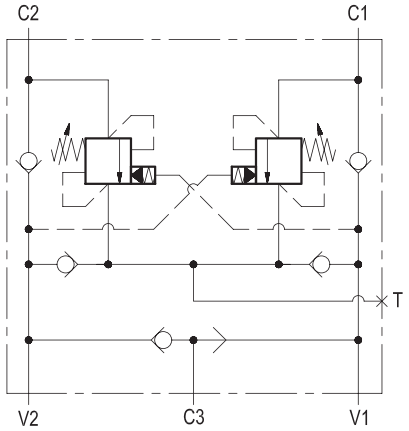

Characteristic curve

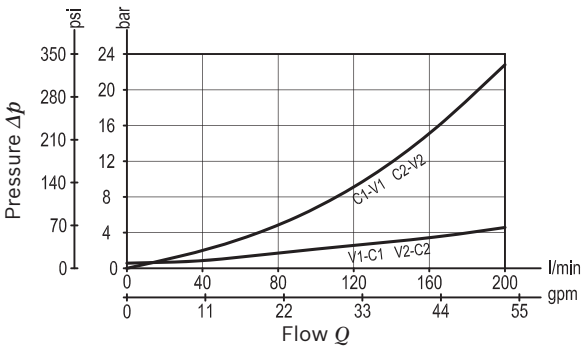

RE 18300-77/03.2013 Bosch Rexroth AG Control Valves

Ordering code

05.71.45	X	05	Z

Motion control
with brake release port

Pilot ratio

03	8:1
10	2.8:1

Port sizes	V1 - V2	C1 - C2	T	C3
	G 1	G 1	G 5/8	G 1/4

	SPRINGS		
	Adj. pressure range bar (psi)	Pres. increase bar/turn (psi/turn)	Std. setting Q=5 (l/min) bar (psi)
35	100-350 (1450-5000)	62 (899)	150 (2200)

Tamper resistant cap code
ordering code 03.05.01.005
Mat. no. R930052041

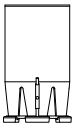

Preferred types

Type	Material number
05714503053500C	R930006896
05714510053500B	R930006892

Type	Material number

Dimensions

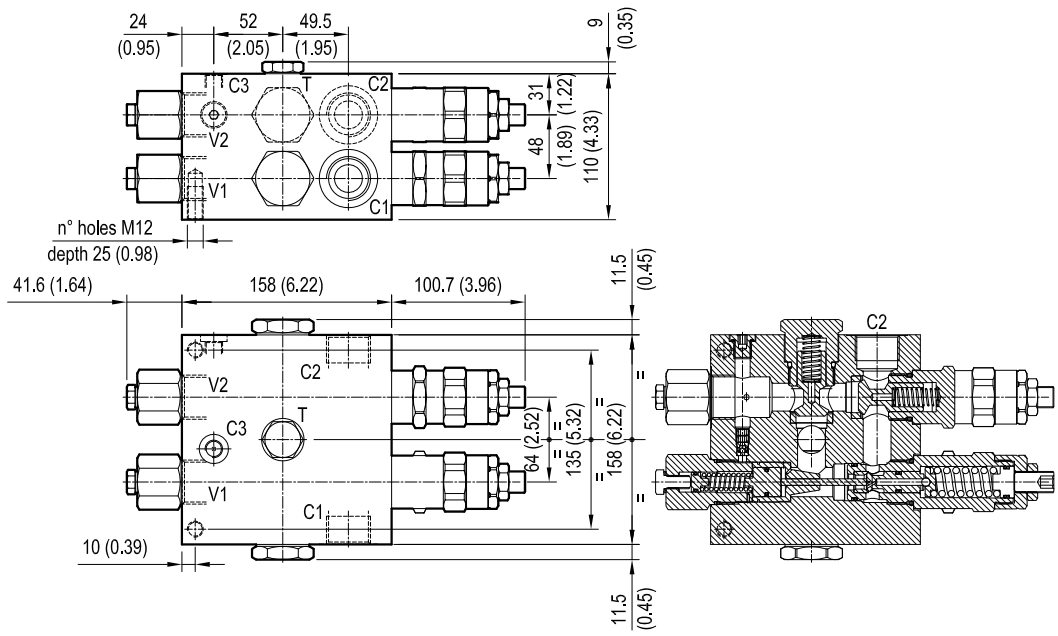

Motion control dual setting

VAA-B-SICN-PDRM-50

05.71.46 - X - 02 - Z

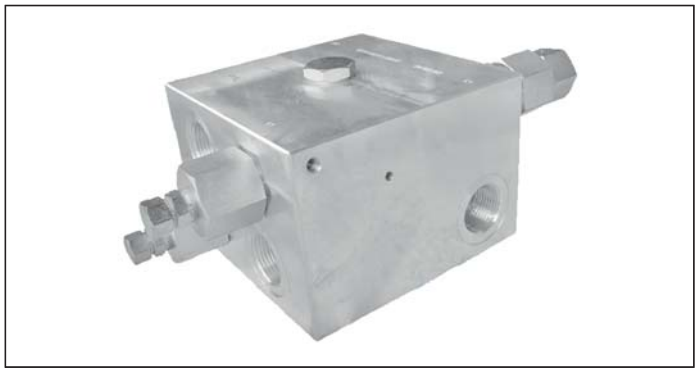

Technical data

Operating pressure	up to 210 bar (3000 psi)
Max. flow	40 l/min. (11 gpm)
Weight	3 kg (6.6 psi)
Manifold material	Aluminium
Note: aluminium bodies are often strong enough for operating pressures exceeding 210 bar (3000 psi), depending from the fatigue life expected in the specific application. If in doubt, consult our Service Network.	
Fluid	Mineral oil (HL, HLP) according DIN 51524
Fluid temperature range	-30 °C to 100 (-22 to 212 °F)
Viscosity range	10 to 500 mm^2/s (cSt)
Recommended degree of fluid contamination	Class 19/17/14 according to ISO 4406
Other technical data	see data sheet 18350-50
Relief setting: at least 1.3 times the highest expected load. The lower pressure setting (see table “SPRINGS”) refers to flow “C1” to “C2” (or “C2” to “C1”), and is adjustable through register “A” (see the drawing).	

Note: for applications outside these parameters, please consult us.

Description

It provides static and dynamic motion control by regulating flow and pressure IN and OUT of the hydraulic motor at ports C1 and C2. When installed close to the motor, it can stop runaway in case of hose failure. The check sections allow free flow into the motor and prevent reverse movement; the pilot assisted relief valves control the movement when pilot pressure is applied. The relief valves operate with 2-levels pressure setting, both adjustable: higher setting when flow is delivered to the motor, and lower setting when flow is discharged by the motor during stopping . A system of check valves allows cross line relief and an optional make-up port (T) allows to compensate for any volume change.

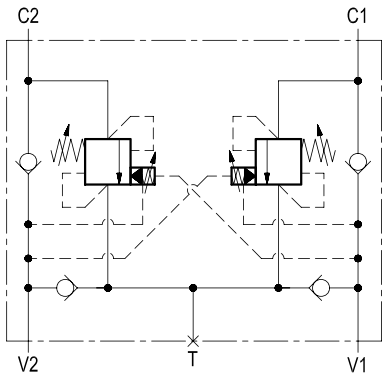

Characteristic curve

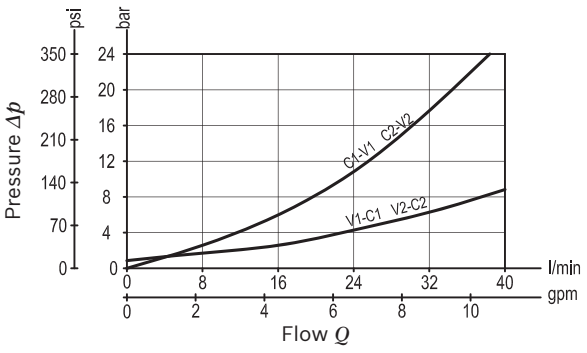

Dimensions [mm (inches)]

Ordering code

05.71.46	X	02	Z

Motion control dual setting

Pilot ratio

37 9.1 : 1

Port sizes	V1 - V2	C1 - C2	T
	G 3/8	G 3/8	G 3/8

	SPRINGS		
	Adj. pressure range bar (psi)	Pres. increase bar/turn (psi/turn)	Std. setting Q=5 (l/min) bar (psi)
20	60-210 (870-3000)	60 (870)	200 (2900) 90* (1300)
35	100-350 (1450-5000)	100 (1450)	300 (4350) 120* (1740)

* Lower pressure setting.

Tamper resistant cap code
ordering code 03.05.01.001
Mat. no. R930000470

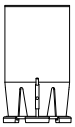

Preferred types

Type	Material number
05714637022000A	R930006867
05714637023500A	R930006785

Type	Material number

Dimensions

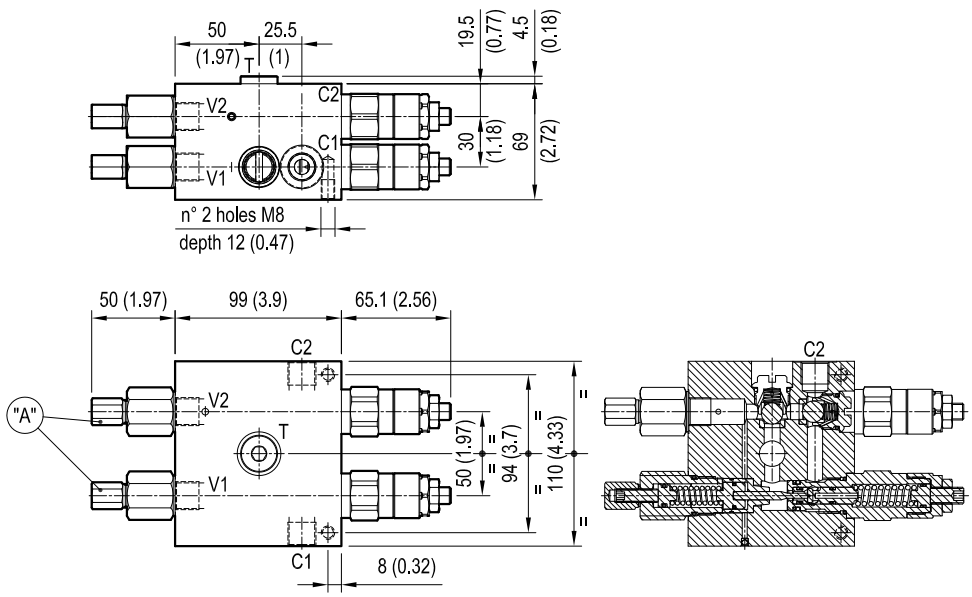

Motion control dual setting

VAA-B-SICN-PDRM-150

05.71.46 - X - 04 - Z

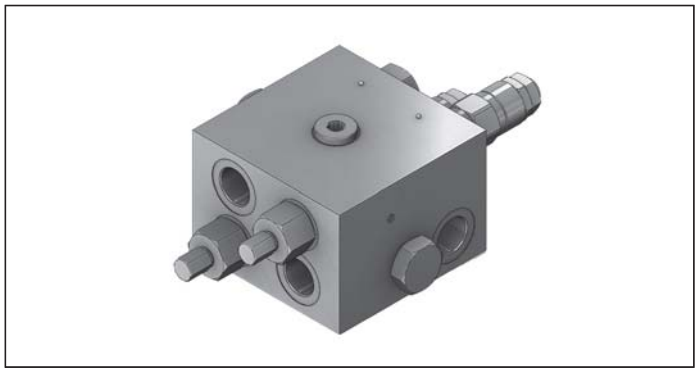

Technical data

Operating pressure	up to 210 bar (3000 psi)
Max. flow	120 l/min. (32 gpm)
Weight	5.7 kg (12.6 psi)
Manifold material	Aluminium
Note: aluminium bodies are often strong enough for operating pressures exceeding 210 bar (3000 psi), depending from the fatigue life expected in the specific application. If in doubt, consult our Service Network.	
Fluid	Mineral oil (HL, HLP) according DIN 51524
Fluid temperature range	-30 °C to 100 (-22 to 212 °F)
Viscosity range	10 to 500 mm^2/s (cSt)
Recommended degree of fluid contamination	Class 19/17/14 according to ISO 4406
Other technical data	see data sheet 18350-50
Relief setting: at least 1.3 times the highest expected load. The lower pressure setting (see table “SPRINGS”) refers to flow “C1” to “C2” (or “C2” to “C1”), and is adjustable through register “A” (see the drawing).	

Note: for applications outside these parameters, please consult us.

Description

It provides static and dynamic motion control by regulating flow and pressure IN and OUT of the hydraulic motor at ports C1 and C2. When installed close to the motor, it can stop runaway in case of hose failure. The check sections allow free flow into the motor and prevent reverse movement; the pilot assisted relief valves control the movement when pilot pressure is applied. The relief valves operate with 2-levels pressure setting, both adjustable: higher setting when flow is delivered to the motor, and lower setting when flow is discharged by the motor during stopping . A system of check valves allows cross line relief and an optional make-up port (T) allows to compensate for any volume change.

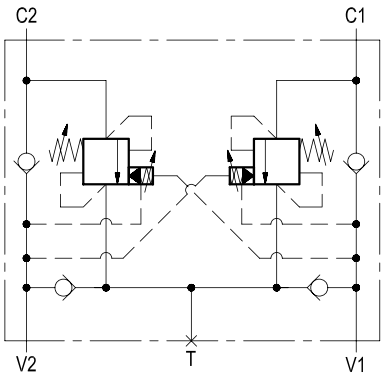

Characteristic curve

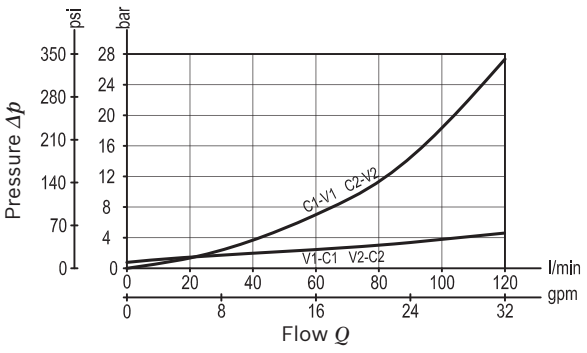

RE 18300-79/03.2013 Bosch Rexroth AG Control Valves

Dimensions [mm (inches)]

Ordering code

05.71.46	X	04	Z

Motion control dual setting

Pilot ratio

03 7.6:1

	SPRINGS		
	Adj. pressure range bar (psi)	Pres. increase bar/turn (psi/turn)	Std. setting Q=5 (l/min) bar (psi)
35	100-350 (1450-5000)	100 (1450)	300 (4350) 120* (1740)

* Lower pressure setting.

Port sizes	V1 - V2	C1 - C2	T
	G 3/4	G 3/4	G 1/2

Tamper resistant cap code
ordering code 03.05.01.001
Mat. no. R930000470

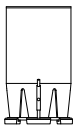

Preferred types

Type	Material number
05714603043500C	R930006980

Type	Material number

Dimensions

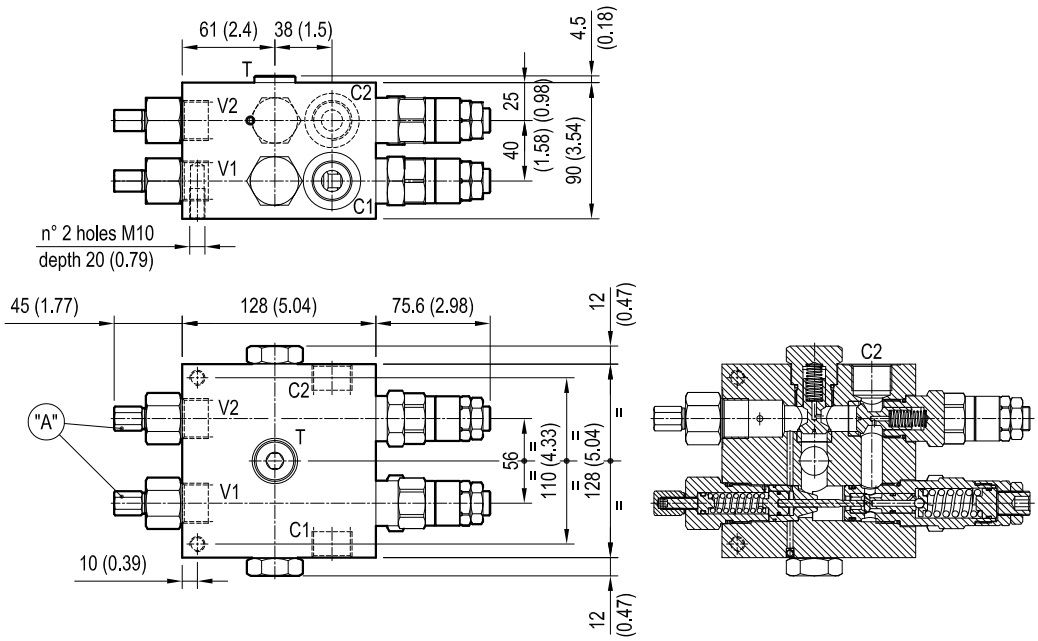

Motion control dual setting

VAA-B-SICN-PDRM-250

05.71.46 - X - 05 - Z

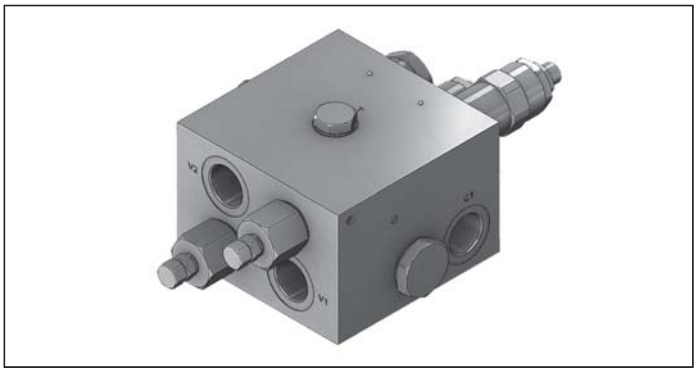

Technical data

Operating pressure	up to 210 bar (3000 psi)
Max. flow	200 l/min. (53 gpm)
Weight	10.9 kg (24 psi)
Manifold material	Aluminium
Note: aluminium bodies are often strong enough for operating pressures exceeding 210 bar (3000 psi), depending from the fatigue life expected in the specific application. If in doubt, consult our Service Network.	
Fluid	Mineral oil (HL, HLP) according DIN 51524
Fluid temperature range	-30 °C to 100 (-22 to 212 °F)
Viscosity range	10 to 500 mm^2/s (cSt)
Recommended degree of fluid contamination	Class 19/17/14 according to ISO 4406
Other technical data	see data sheet 18350-50
Relief setting: at least 1.3 times the highest expected load. The lower pressure setting (see table “SPRINGS”) refers to flow “C1” to “C2” (or “C2” to “C1”), and is adjustable through register “A” (see the drawing).	

Note: for applications outside these parameters, please consult us.

Description

It provides static and dynamic motion control by regulating flow and pressure IN and OUT of the hydraulic motor at ports C1 and C2. When installed close to the motor, it can stop runaway in case of hose failure. The check sections allow free flow into the motor and prevent reverse movement; the pilot assisted relief valves control the movement when pilot pressure is applied. The relief valves operate with 2-levels pressure setting, both adjustable: higher setting when flow is delivered to the motor, and lower setting when flow is discharged by the motor during stopping . A system of check valves allows cross line relief and an optional make-up port (T) allows to compensate for any volume change.

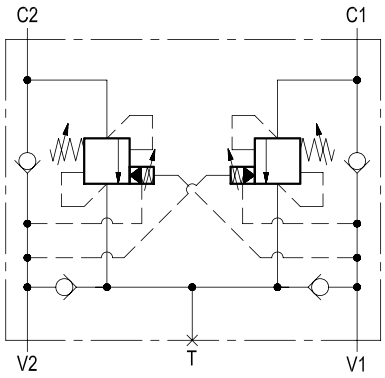

Characteristic curve

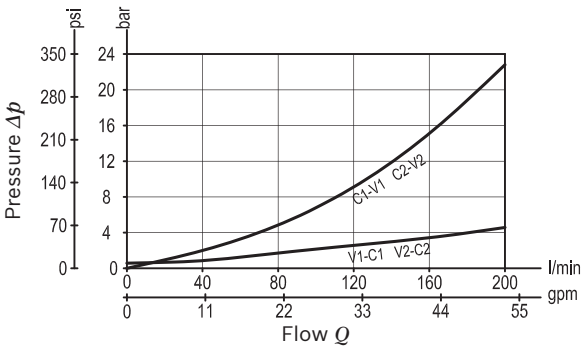

Ordering code

05.71.46	X	05	Z

Motion control dual setting

Pilot ratio

03 8:1

Port sizes	V1 - V2	C1 - C2	T
	G 1	G 1	G 5/8

	SPRINGS		
	Adj. pressure range bar (psi)	Pres. increase bar/turn (psi/turn)	Std. setting Q=5 (l/min) bar (psi)
35	100-350 (1450-5000)	62 (899)	300 (4350) 120* (1740)

* Lower pressure setting.

Tamper resistant cap code
ordering code 03.05.01.005
Mat. no. R930052041

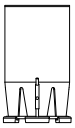

Preferred types

Type	Material number
05714603053500B	R930006981

Type	Material number

Dimensions

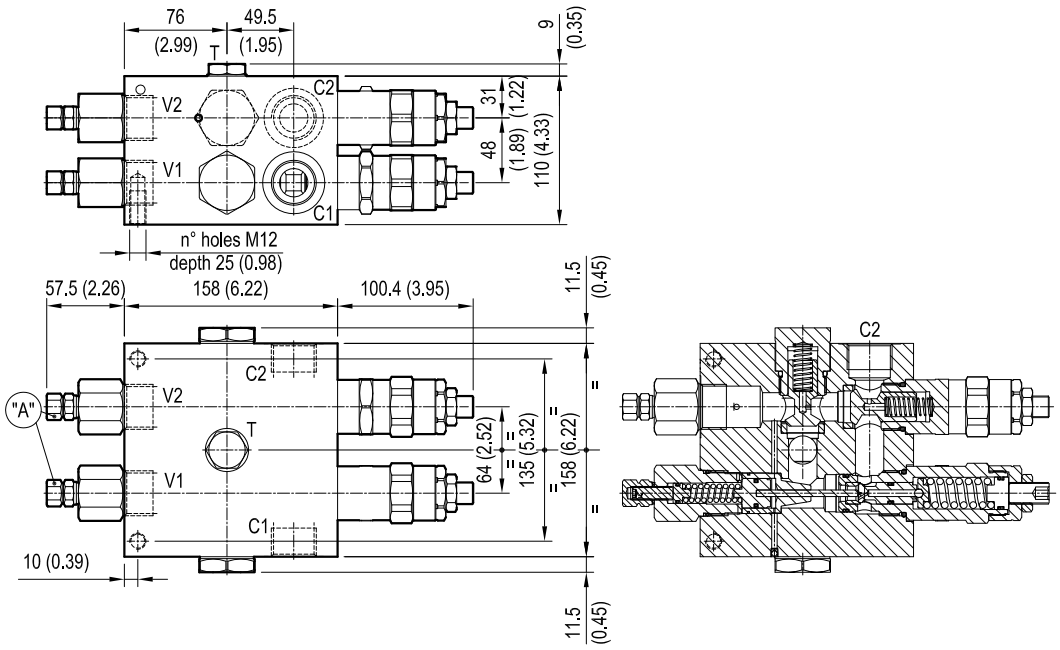

Motion control, dual setting with brake release port

VAA-B-SICN-PDRM-VF-50 05.71.47 - X - 02 - Z

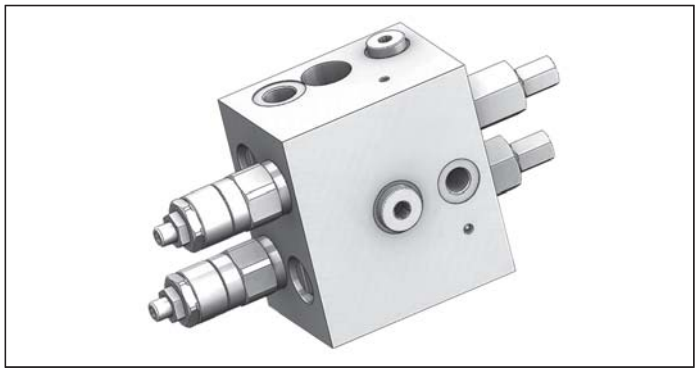

Description

It provides static and dynamic motion control by regulating flow and pressure IN and OUT of the hydraulic motor at ports C1 and C2. When installed close to the motor, it can stop runaway in case of hose failure. The check sections allow free flow into the motor and prevent reverse movement; the pilot assisted relief valves control the movement when pilot pressure is applied. The relief valves operate with 2-levels pressure setting, both adjustable: higher setting when flow is delivered to the motor, and lower setting when flow is discharged by the motor during stopping. A system of check valves allows cross line relief and an optional make-up port (T) allows to compensate for any volume change. Through port C3, a shuttle valve directs either V1 or V2 pressure to the spring actuated brake for brake releasing.

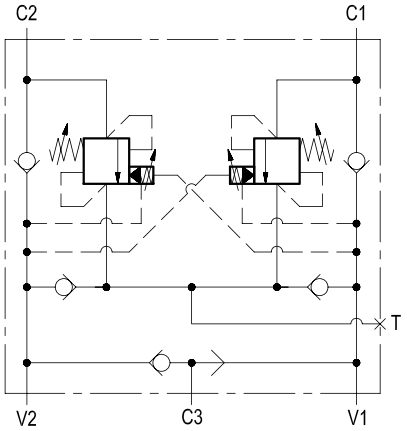

Technical data

Operating pressure	up to 210 bar (3000 psi)
Max. flow	40 l/min. (11 gpm)
Weight	3 kg (6.6 psi)
Manifold material	Aluminium
Note: aluminium bodies are often strong enough for operating pressures exceeding 210 bar (3000 psi), depending from the fatigue life expected in the specific application. If in doubt, consult our Service Network.	
Fluid	Mineral oil (HL, HLP) according DIN 51524
Fluid temperature range	-30 °C to 100 (-22 to 212 °F)
Viscosity range	10 to 500 mm^2/s (cSt)
Recommended degree of fluid contamination	Class 19/17/14 according to ISO 4406
Other technical data	see data sheet 18350-50
Relief setting: at least 1.3 times the highest expected load. The lower pressure setting (see table “SPRINGS”) refers to flow “C1” to “C2” (or “C2” to “C1”), and is adjustable through register “A” (see the drawing).	

Note: for applications outside these parameters, please consult us.

Characteristic curve

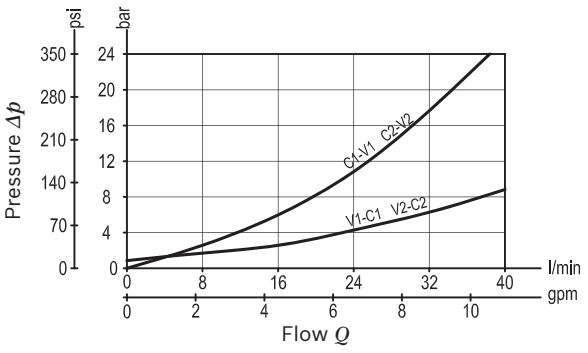

Ordering code

05.71.47	X	02	Z

Motion control, dual setting with brake release port

Pilot ratio

37 9.1 : 1

Port sizes	V1 - V2	C1 - C2	C3	T
	G 3/8	G 3/8	G 1/4	G 3/8

	SPRINGS		
	Adj. pressure range bar (psi)	Pres. increase bar/turn (psi/turn)	Std. setting Q=5 (l/min) bar (psi)
20	60-210 (870-3000)	60 (870)	200 (2900) 90* (1300)
35	100-350 (1450-5000)	100 (1450)	300 (4350) 120* (1740)

* Lower pressure setting.

Tamper resistant cap code ordering code 03.05.01.001
Mat. no. R930000470

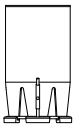

Preferred types

Type	Material number
05714737022000A	R930006871
05714737023500A	R930006870

Type	Material number

Dimensions

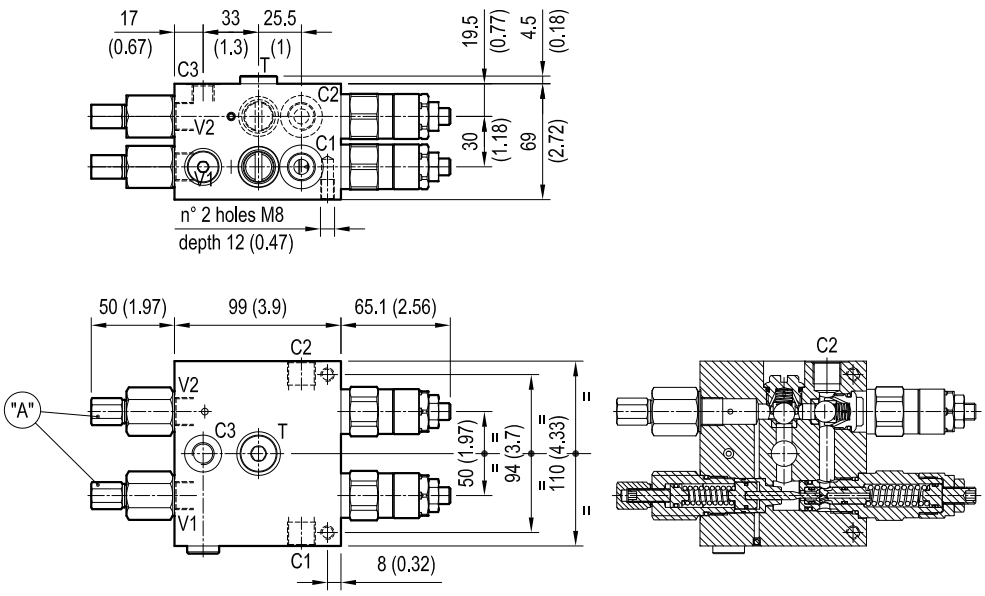

Motion control, dual setting with brake release port

VAA-B-SICN-PDRM-VF-150 05.71.47 - X - 04 - Z

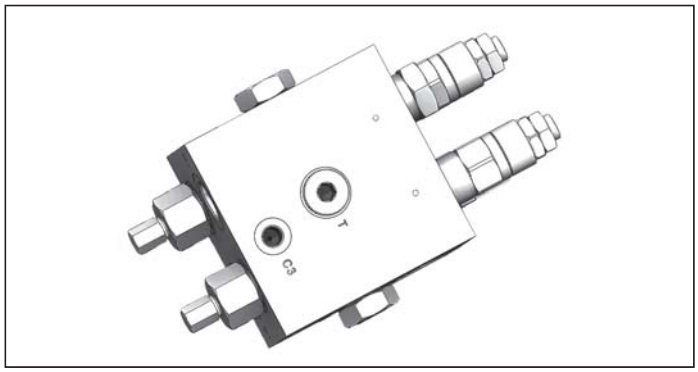

Description

It provides static and dynamic motion control by regulating flow and pressure IN and OUT of the hydraulic motor at ports C1 and C2. When installed close to the motor, it can stop runaway in case of hose failure. The check sections allow free flow into the motor and prevent reverse movement; the pilot assisted relief valves control the movement when pilot pressure is applied. The relief valves operate with 2-levels pressure setting, both adjustable: higher setting when flow is delivered to the motor, and lower setting when flow is discharged by the motor during stopping. A system of check valves allows cross line relief and an optional make-up port (T) allows to compensate for any volume change. Through port C3, a shuttle valve directs either V1 or V2 pressure to the spring actuated brake for brake releasing.

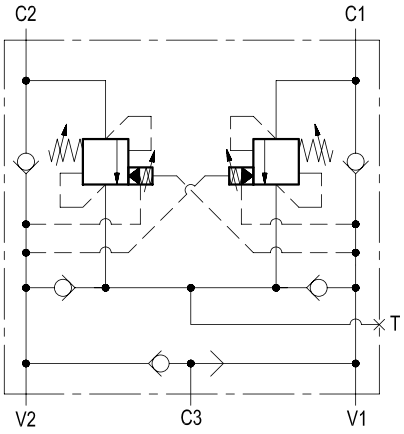

Technical data

Operating pressure	up to 210 bar (3000 psi)
Max. flow	120 l/min. (32 gpm)
Weight	5.7 kg (12.6 psi)
Manifold material	Aluminium
Note: aluminium bodies are often strong enough for operating pressures exceeding 210 bar (3000 psi), depending from the fatigue life expected in the specific application. If in doubt, consult our Service Network.	
Fluid	Mineral oil (HL, HLP) according DIN 51524
Fluid temperature range	-30 °C to 100 (-22 to 212 °F)
Viscosity range	10 to 500 mm^2/s (cSt)
Recommended degree of fluid contamination	Class 19/17/14 according to ISO 4406
Other technical data	see data sheet 18350-50
Relief setting: at least 1.3 times the highest expected load. The lower pressure setting (see table “SPRINGS”) refers to flow “C1” to “C2” (or “C2” to “C1”), and is adjustable through register “A” (see the drawing).	

Note: for applications outside these parameters, please consult us.

Characteristic curve

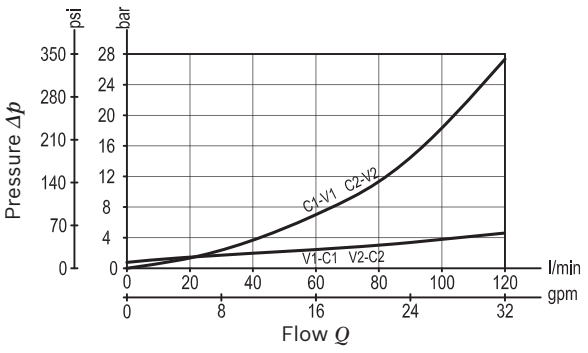

Ordering code

05.71.47	X	04	Z

Motion control, dual setting

Pilot ratio

03 7.6:1

	SPRINGS		
	Adj. pressure range bar (psi)	Pres. increase bar/turn (psi/turn)	Std. setting Q=5 (l/min) bar (psi)
35	100-350 (1450-5000)	105 (1523)	300 (4350) 120* (1740)

* Lower pressure setting.

Tamper resistant cap code
ordering code 03.05.01.001
Mat. no. R930000470

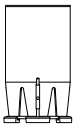

Port sizes	V1 - V2	C1 - C2	C3	T
	G 3/4	G 3/4	G 1/4	G 1/2

Preferred types

Type	Material number
05714703043500B	R930006860

Type	Material number

Dimensions

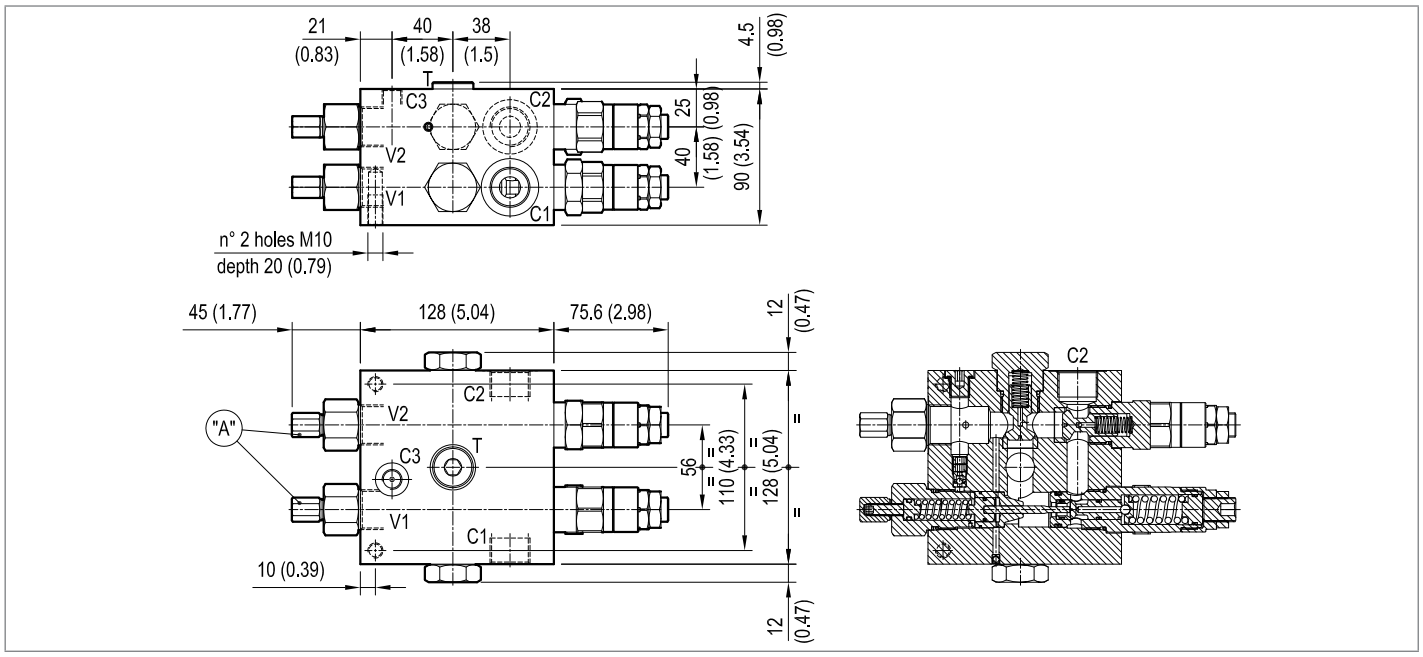

Motion control, dual setting with brake release port

VAA-B-SICN-PDRM-VF-250 05.71.47 - X - 05 - Z

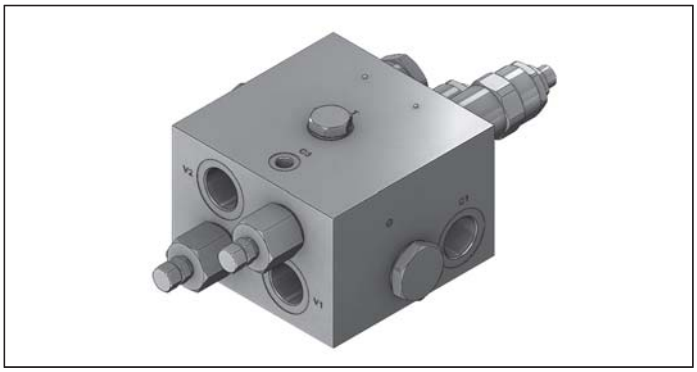

Description

It provides static and dynamic motion control by regulating flow and pressure IN and OUT of the hydraulic motor at ports C1 and C2. When installed close to the motor, it can stop runaway in case of hose failure. The check sections allow free flow into the motor and prevent reverse movement; the pilot assisted relief valves control the movement when pilot pressure is applied. The relief valves operate with 2-levels pressure setting, both adjustable: higher setting when flow is delivered to the motor, and lower setting when flow is discharged by the motor during stopping. A system of check valves allows cross line relief and an optional make-up port (T) allows to compensate for any volume change. Through port C3, a shuttle valve directs either V1 or V2 pressure to the spring actuated brake for brake releasing.

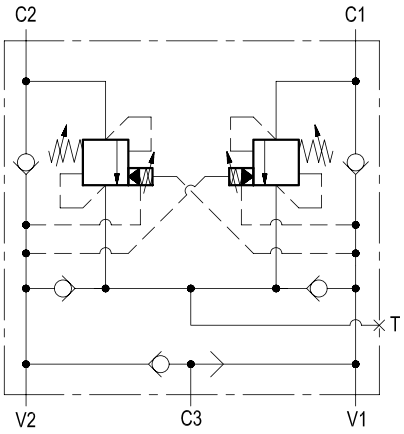

Technical data

Operating pressure	up to 210 bar (3000 psi)
Max. flow	200 l/min. (53 gpm)
Weight	11 kg (24 psi)
Manifold material	Aluminium
Note: aluminium bodies are often strong enough for operating pressures exceeding 210 bar (3000 psi), depending from the fatigue life expected in the specific application. If in doubt, consult our Service Network.	
Fluid	Mineral oil (HL, HLP) according DIN 51524
Fluid temperature range	-30 °C to 100 (-22 to 212 °F)
Viscosity range	10 to 500 mm^2/s (cSt)
Recommended degree of fluid contamination	Class 19/17/14 according to ISO 4406
Other technical data	see data sheet 18350-50
Relief setting: at least 1.3 times the highest expected load. The lower pressure setting (see table “SPRINGS”) refers to flow “C1” to “C2” (or “C2” to “C1”), and is adjustable through register “A” (see the drawing).	

Note: for applications outside these parameters, please consult us.

Characteristic curve

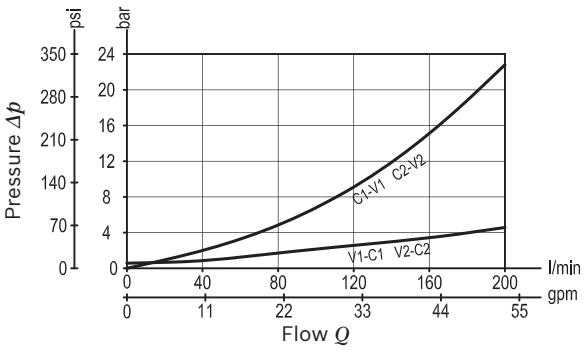

Ordering code

05.71.47	X	05	Z

Motion control, dual setting with brake release port

Pilot ratio

03 8:1

	SPRINGS		
	Adj. pressure range bar (psi)	Pres. increase bar/turn (psi/turn)	Std. setting Q=5 (l/min) bar (psi)
35	100-350 (1450-5000)	62 (899)	300 (4350) 120* (1740)

* Lower pressure setting.

Port sizes	V1 - V2	C1 - C2	C3	T
	G 1	G 1	G 1/4	G 5/8

Tamper resistant cap code ordering code 03.05.01.005
Mat. no. R930052041

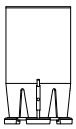

Preferred types

Type	Material number
05714703053500B	R930006898

Type	Material number

Dimensions

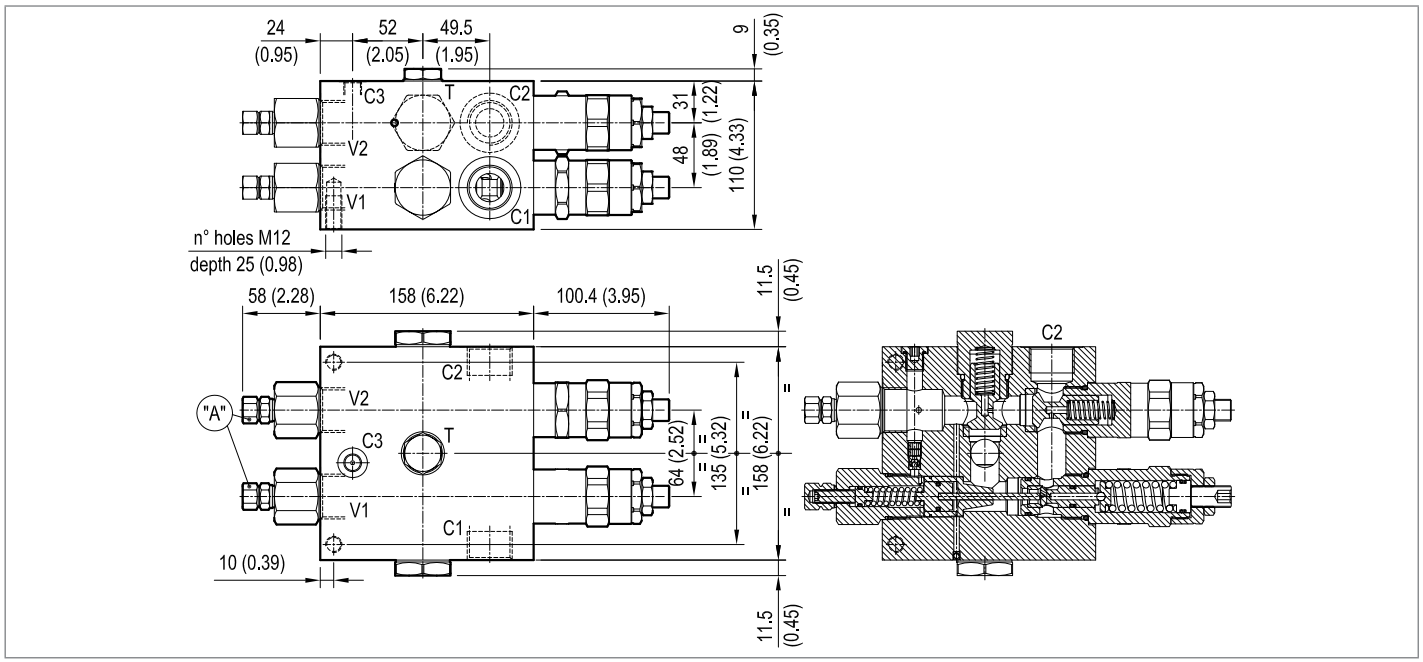

Load holding/motion control

Load lowering and relief valves

Designation	Description	Ports	Code	Data sheet	Page
Load lowering and relief	VRBC90-VS30	G 1/2	054975XYZ	18310-30	279
Load lowering and relief	VRBC90-VS30-CC-FC2	Flangeable	053738XYZ	18310-31	281

Load lowering and relief

VRBC90-VS30

05.49.75 - X - Y - Z

Description

When pressure at V2 rises above the check spring bias pressure, the check seat is pushed open and upstream flow is allowed from V2 to C2. Reverse flow (C2 - V2) is locked, in a leak free mode, by valve (1). Downstream flow (C2 - V2) is possible when Pil pressure rises above the bias pressure of the valve (1) spring. The back-pressure at V2 is directly additive to the spring and tends to close the control plunger: it restricts the flow area and it increases the pressure drop through valve (1). If Pil pressure is limited and kept constant, also back-pressure at V2 will remain constant, and downstream flow (C2 - V2) will stay constant, controlled only by the Main Control Valve opening (V2 to T), independently from the load (C2 pressure). The result is easier and better control during lowering. The leak free pressure relief valve (2) senses C2 pressure and opens under overload or shock conditions.

Note: port identified with M are not protected with calibrated orifice but in direct connection with pressure channels.

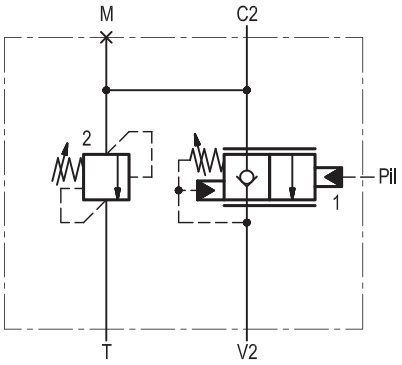

Technical data

Operating pressure	up to 210 bar (3000 psi)
Max. flow	90 l/min. (24 gpm)
Weight	1.2 kg (2.6 lbs)
Manifold material	Anodized aluminium
Note: aluminium bodies are often strong enough for operating pressures exceeding 210 bar (3000 psi), depending from the fatigue life expected in the specific application. If in doubt, consult our Service Network.	
Fluid	Mineral oil (HL, HLP) according DIN 51524
Fluid temperature range	-30 °C to 100 (-22 to 212 °F)
Viscosity range	10 to 500 mm^2/s (cSt)
Recommended degree of fluid contamination	Class 19/17/14 according to ISO 4406
Other technical data	see data sheet 18350-50
Relief setting: at least 1.3 times the highest expected load.	

Note: for applications outside these parameters, please consult us.

Characteristic curve

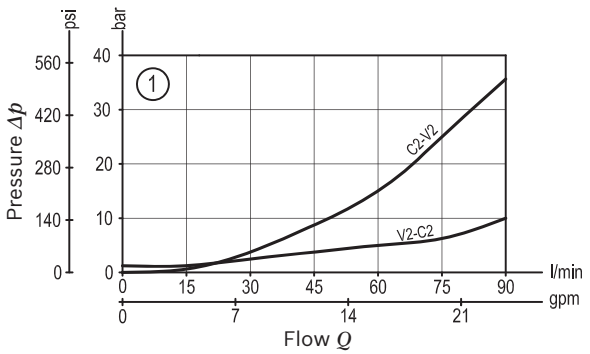

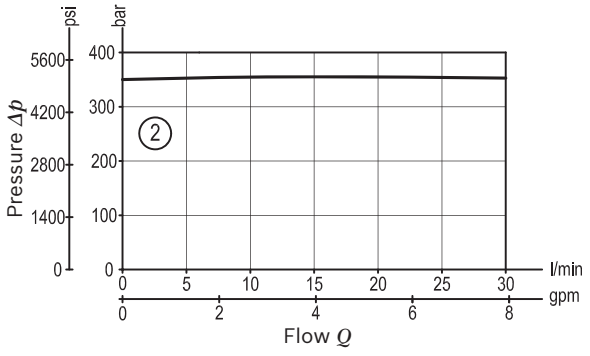

Dimensions [mm (inches)]

Ordering code

05.49.75	X	Y	Z

Load lowering and relief

Adjustments

00	Inner hex. socket screw protected by locking nut

Port sizes	V2 - C2	Pil - T - M
03	G 1/2	G 1/4

		SPRINGS		
		Adj. pressure range bar (psi)	Pres. increase bar/turn (psi/turn)	Std. setting bar (psi)
35	Valve 1	10-40 (145-580)	8 (116)	30 (435) “cracking”
	Valve 2	100-350 (1450-5000)	85 (1233)	350 (5000) “5 l/min”

Tamper resistant cap
ordering code 11.04.33.001
Mat. no. R930005387
for Valve 1

Tamper resistant cap
ordering code 11.04.23.003
Mat. no. R930000754
for Valve 2

Preferred types

Type	Material number
054975000335000	R930002982

Type	Material number

Dimensions

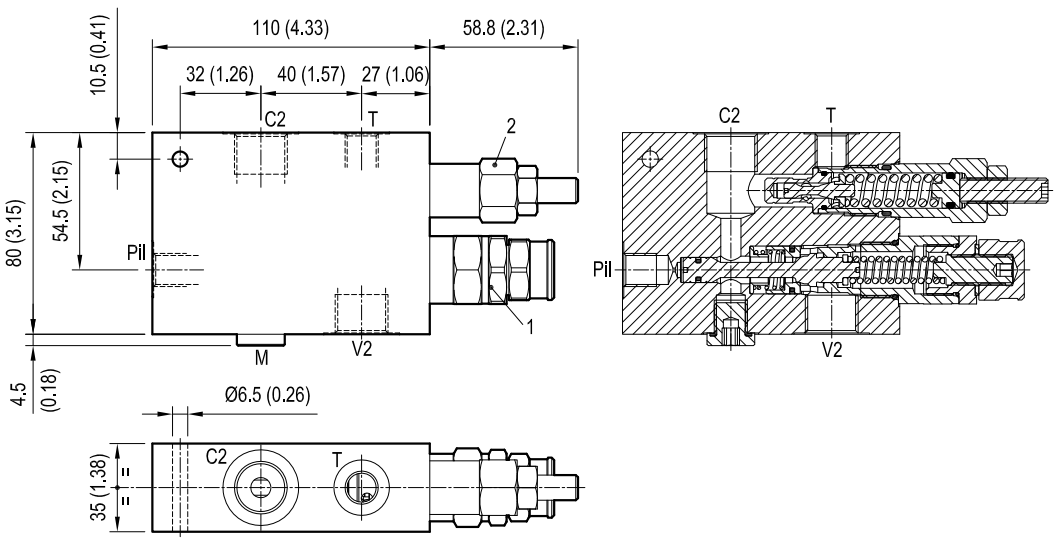

Load lowering and relief

VRBC90-VS30-CC-FC2 05.37.38 - X - Y - Z

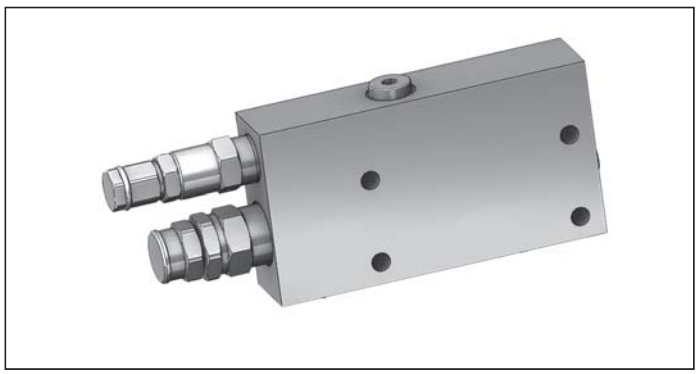

Description

When pressure at V2 rises above the check spring bias pressure, the check seat is pushed open and upstream flow is allowed from V2 to C2. Reverse flow (C2 - V2) is locked, in a leak free mode, by valve (1). Downstream flow (C2 - V2) is possible when C1-V1 pressure rises above the bias pressure of the valve (1) spring. The back-pressure at V2 is directly additive to the spring and tends to close the control plunger: it restricts the flow area and it increases the pressure drop through valve (1). If C1-C1 pressure is limited and kept constant, also back-pressure at V2 will remain constant, and downstream flow (C2 - V2) will stay constant, controlled only by the Main Control Valve opening (V2 to T), independently from the load (C2 pressure). The result is easier and better control during lowering. The leak free pressure relief valve (2) senses C2 pressure and opens under overload or shock conditions. For better safety and compact assembly, the C2 port is gasket mounted directly on the actuator.

Note: port identified with M are not protected with calibrated orifice but in direct connection with pressure channels.

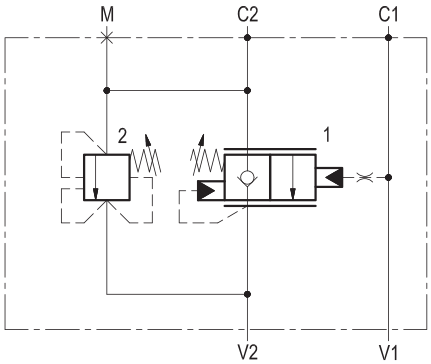

Technical data

Operating pressure	up to 210 bar (3000 psi)
Max. flow	90 l/min. (24 gpm)
Weight	1.5 kg (3.3 lbs)
Manifold material	Anodized aluminium
Note: aluminium bodies are often strong enough for operating pressures exceeding 210 bar (3000 psi), depending from the fatigue life expected in the specific application. If in doubt, consult our Service Network.	
Flange seal kit [1]	E00000000000009 (R930004539)
Fluid	Mineral oil (HL, HLP) according DIN 51524
Fluid temperature range	-30 °C to 100 (-22 to 212 °F)
Viscosity range	10 to 500 mm^2/s (cSt)
Recommended degree of fluid contamination	Class 19/17/14 according to ISO 4406
Other technical data	see data sheet 18350-50
Relief setting: at least 1.3 times the highest expected load.	

Note: for applications outside these parameters, please consult us.
[1] Seals for 10 valves

Characteristic curve

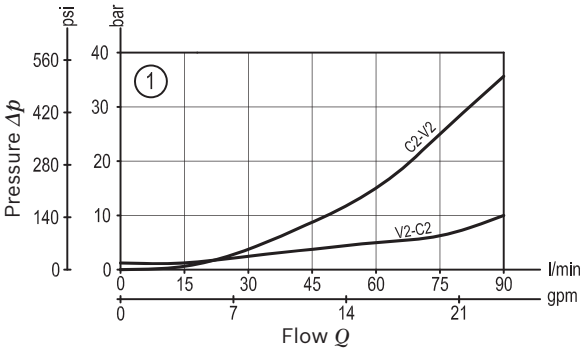

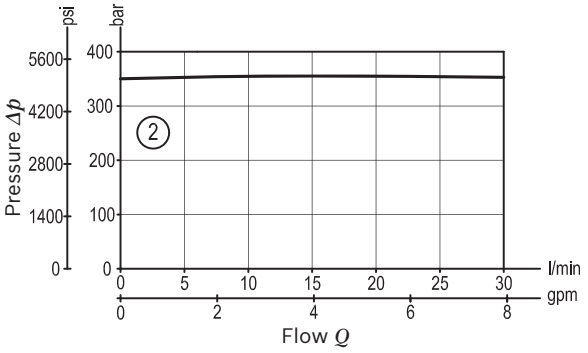

RE 18310-31/03.2013 Bosch Rexroth AG Control Valves

Ordering code

05.37.38	X	Y	Z

Load lowering and relief

Adjustments

00	Inner hex. socket screw protected by locking nut

Port sizes	V1 - V2	M	C1 - C2
03	G 1/2	G 1/4	Ø 9 (0.35)

		SPRINGS		
		Adj. pressure range bar (psi)	Pres. increase bar/turn (psi/turn)	Std. setting bar (psi)
35	Valve 1	10-30 (145-435)	8 (116)	30 (435) “cracking”
	Valve 2	100-350 (1450-5000)	85 (1233)	350 (5000) “5 l/min”

Tamper resistant cap
ordering code 11.04.33.001
Mat. no. R930005387
for Valve 1

Preferred types

Type	Material number
05373800033500A	R930007469

Type	Material number

Dimensions

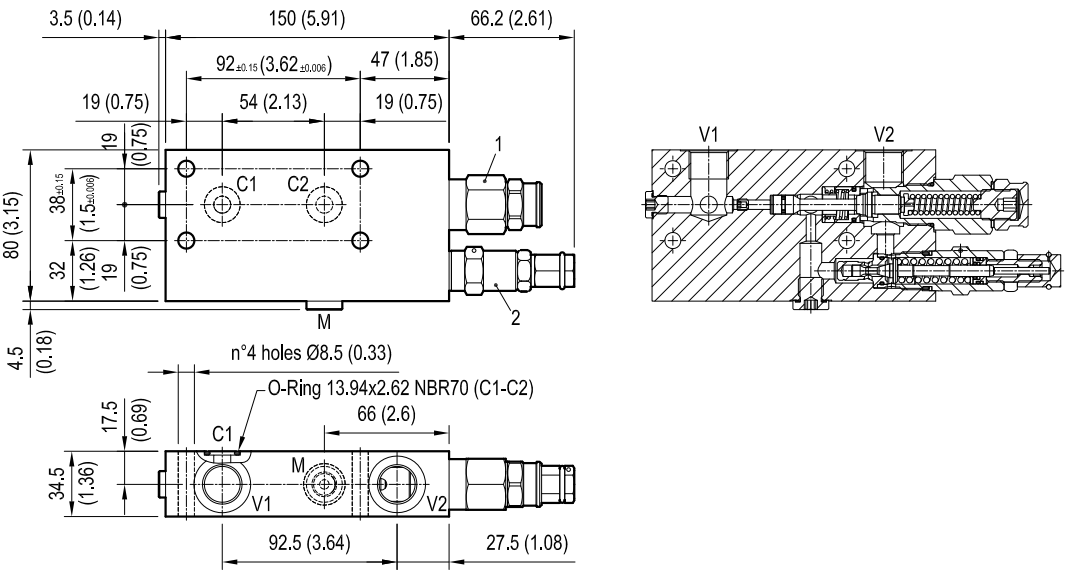

Load holding/motion control
Check and metering valves

Designation	Description	Ports	Code	Data sheet	Page
Check and metering, in-line	A-VBC-78-DX	G 3/8	084929XYZ	18309-01	285
Check and metering, in-line	A-VBC-78-SX	G 3/8	084930XYZ	18309-02	287
Check and metering, in-line	A-VBC-90-DX	G 1/2	084797XYZ	18309-03	289
Check and metering, in-line	A-VBC-90-SX	G 1/2	084796XYZ	18309-04	291
Check and metering, in-line	A-VBC-33-DX	G 3/4	084924XYZ	18309-05	293
Check and metering, in-line	A-VBC-33-SX	G 3/4	084925XYZ	18309-06	295
Check and metering, flangeable	A-VBC-90-FC	SAE 6000	084783XYZ	18309-07	297
Check and metering, flangeable	A-VBC-33-FC	SAE 6000	084926XYZ	18309-08	299
Check and metering, flangeable	A-VBC-33-FC	SAE 6000	084784XYZ	18309-09	301
Check and metering, flangeable	A-VBC-42-FC	SAE 6000	084785X72Z	18309-10	303
Check and metering, flangeable	A-VBC-42-FC	SAE 6000	084785X73Z	18309-11	305
Check and metering, flangeable	A-VBC-42-FC	SAE 6000	084785X64Z	18309-12	307
Check and metering, flangeable	A-VBCN-15-FC	SAE 6000	08352307YZ	18309-13	309
Check and metering, flangeable	A-VBCN-18-FC	SAE 6000	08371818YZ	18309-14	311
Check and metering, flangeable	A-VBCN-15-DX-RE-FC	SAE 6000	083964XYZ	18309-15	313
Check and metering, flangeable	A-VBCN-15-SX-RE-FC	SAE 6000	083965XYZ	18309-16	315
Check and metering, flangeable	A-VBCN-22-DX-RE-FC	SAE 6000	083938XYZ	18309-18	317
Check and metering, flangeable	A-VBCN-22-SX-RE-FC	SAE 6000	083937XYZ	18309-17	319
Control plus check and metering valve	A-VBC14-FC2	Flangeable	083990XYZ	18308-99	321

Check and metering valve

A-VBC-78-DX

08.49.29 - X - Y - Z

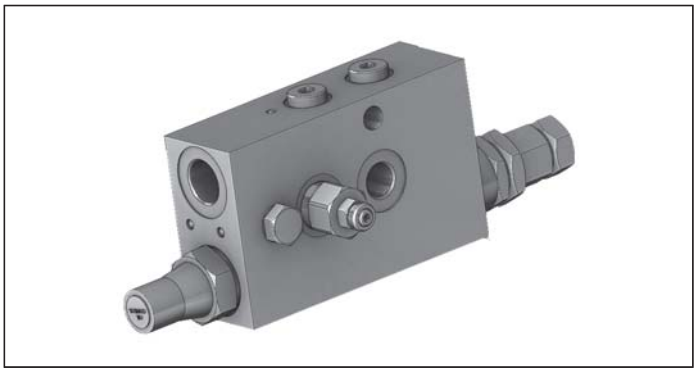

Technical data

Max. operating pressure	420 bar (6000 psi)
Max. flow	40 l/min. (11 gpm)
Weight	1.88 kg (4.1 lbs)
Manifold material	Zinc plated steel
Fluid	Mineral oil (HL, HLP) according DIN 51524
Fluid temperature range	-30 °C to 100 (-22 to 212 °F)
Viscosity range	10 to 500 mm^2/s (cSt)
Recommended degree of fluid contamination	Class 19/17/14 according to ISO 4406
This valve is designed to be pipe mounted on boom cylinders of hydraulic excavators, and, with specific adjustments, it can become part of load holding and load lowering systems designed to comply with ISO Standard 8643 (hose burst protection).	
Note: the Tank vented port must be connected to a “low pressure tank line” (to the joystick tank line, or to tank directly).	
The Factory sealed “E” screw can be used for Emergency spool opening and boom lowering, in case of pilot pressure failure; once the emergency boom lowering is completed, the “E” screw must be restored to its original position and locked.	
Other technical data	see data sheet 18350-50

Note: for applications outside these parameters, please consult us.

Description

Upstream flow (V2 - C2) to the cylinder is free through a check valve, and reverse flow (C2 - V2) is locked/metered by a leak free spool (1) which provides fine metering in the initial opening stroke. The spool, normally held closed by an adjustable spring force, is remotely controlled by joystick pilot pressure; the pilot pressure required to move the spool is load independent because the spring is vented to Tank. The valve includes a small relief cartridge (2) which senses C2 pressure and opens under overload or shock conditions in order to pilot wide open the metering spool and to allow cylinder pressure to be relieved downstream through the main hose (V2) and through the main control valve.

Note: port identified with M are not protected with calibrated orifice but in direct connection with pressure channels.

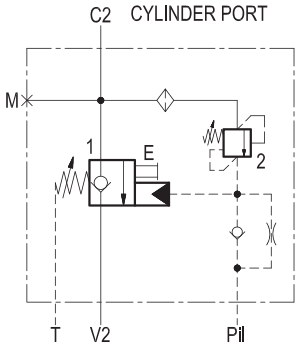

Characteristic curve

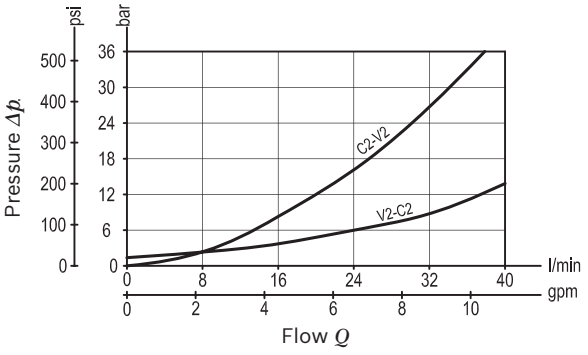

Dimensions [mm (inches)]

Ordering code

08.49.29	X	Y	Z

Check and metering valve

Adjustments

03	Inner hex. socket screw protected by locking nut

Port sizes	V2-C2	Pil	T	M
02	G 3/8	G 1/4	G 1/4	G 1/8

		SPRINGS		
		Adj. pressure range bar (psi)	Pres. increase bar/turn (psi/turn)	Std. setting bar (psi)
40	Valve 1	7-19.5 (100-280)	3 (44)	7.5 (109) “cracking”
	Valve 2	350-460 (5000-6600)	228 (3306)	350 (5000) “5 l/min”

Tamper resistant cap
ordering code 11.04.31.001
Mat. no. R930000777
for Valve 2

Preferred types

Type	Material number
08492903024000A	R930008022

Type	Material number

Dimensions

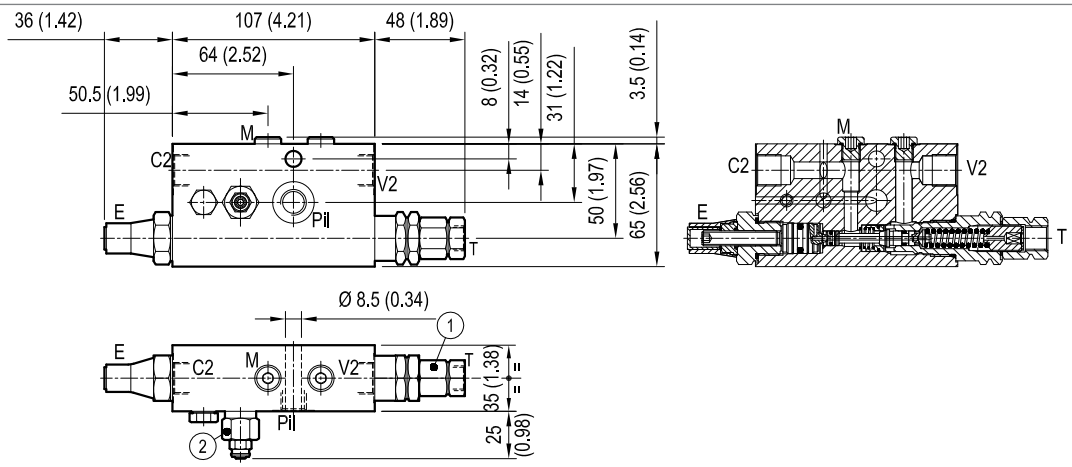

Check and metering valve

A-VBC-78-SX

08.49.30 - X - Y - Z

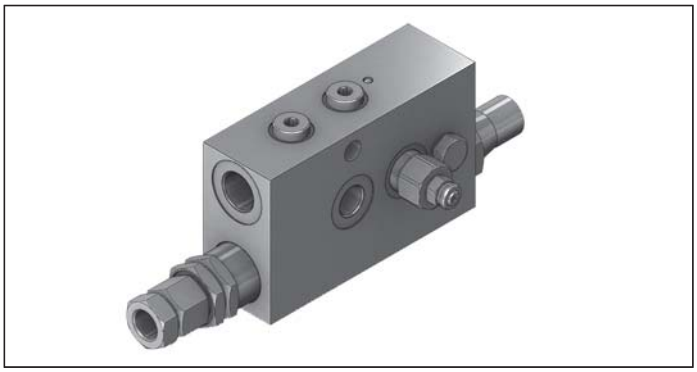

Description

Upstream flow (V2 - C2) to the cylinder is free through a check valve, and reverse flow (C2 - V2) is locked/metered by a leak free spool (1) which provides fine metering in the initial opening stroke. The spool, normally held closed by an adjustable spring force, is remotely controlled by joystick pilot pressure; the pilot pressure required to move the spool is load independent because the spring is vented to Tank. The valve includes a small relief cartridge (2) which senses C2 pressure and opens under overload or shock conditions in order to pilot wide open the metering spool and to allow cylinder pressure to be relieved downstream through the main hose (V2) and through the main control valve.

Note: port identified with M are not protected with calibrated orifice but in direct connection with pressure channels.

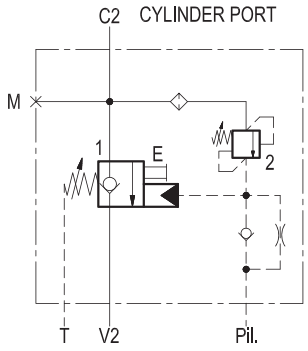

Technical data

Max. operating pressure	420 bar (6000 psi)
Max. flow	40 l/min. (11 gpm)
Weight	1.87 kg (4.1 lbs)
Manifold material	Zinc plated steel
Fluid	Mineral oil (HL, HLP) according DIN 51524
Fluid temperature range	-30 °C to 100 (-22 to 212 °F)
Viscosity range	10 to 500 mm^2/s (cSt)
Recommended degree of fluid contamination	Class 19/17/14 according to ISO 4406
This valve is designed to be pipe mounted on boom cylinders of hydraulic excavators, and, with specific adjustments, it can become part of load holding and load lowering systems designed to comply with ISO Standard 8643 (hose burst protection).	
Note: the Tank vented port must be connected to a “low pressure tank line” (to the joystick tank line, or to tank directly).	
The Factory sealed “E” screw can be used for Emergency spool opening and boom lowering, in case of pilot pressure failure; once the emergency boom lowering is completed, the “E” screw must be restored to its original position and locked.	
Other technical data	see data sheet 18350-50

Note: for applications outside these parameters, please consult us.

Characteristic curve

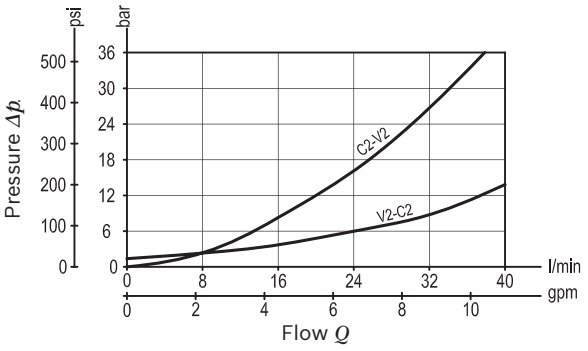

Dimensions [mm (inches)]

Ordering code

08.49.30	X	Y	Z

Check and metering valve

Adjustments

03	Inner hex. socket screw protected by locking nut

Port sizes	V2-C2	Pil	T	M
02	G 3/8	G 1/4	G 1/4	G 1/8

		SPRINGS		
		Adj. pressure range bar (psi)	Pres. increase bar/turn (psi/turn)	Std. setting bar (psi)
40	Valve 1	7-19.5 (100-280)	3 (44)	7.5 (109) “cracking”
	Valve 2	350-460 (5000-6600)	228 (3306)	350 (5000) “5 l/min”

Tamper resistant cap
ordering code 11.04.31.001
Mat. no. R930000777
for Valve 2

Preferred types

Type	Material number
08493003024000A	R930006695

Type	Material number

Dimensions

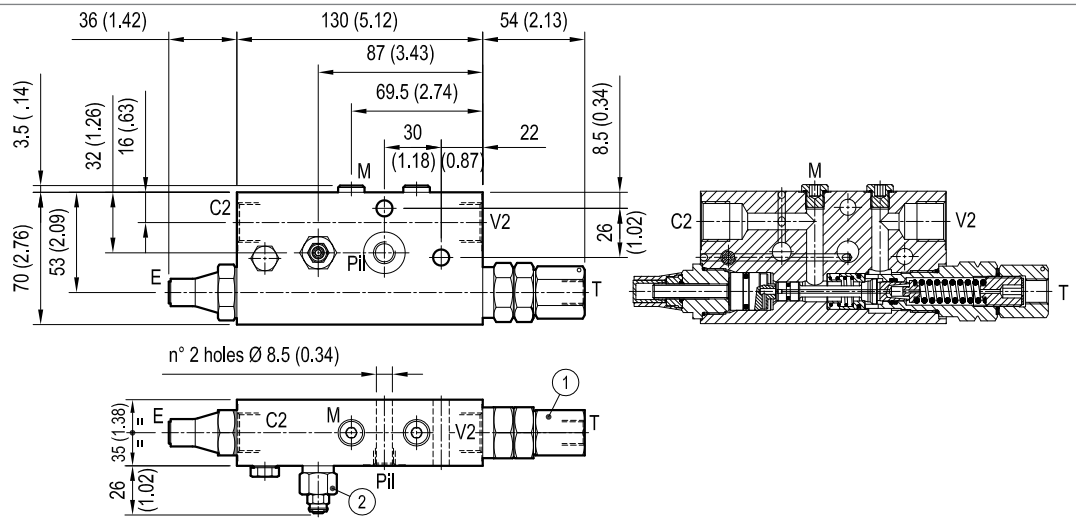

Bosch Rexroth Oil Control S.p.A. | E 93300-01/03.2013

288

Check and metering valve

A-VBC-90-DX

08.47.97 - X - Y - Z

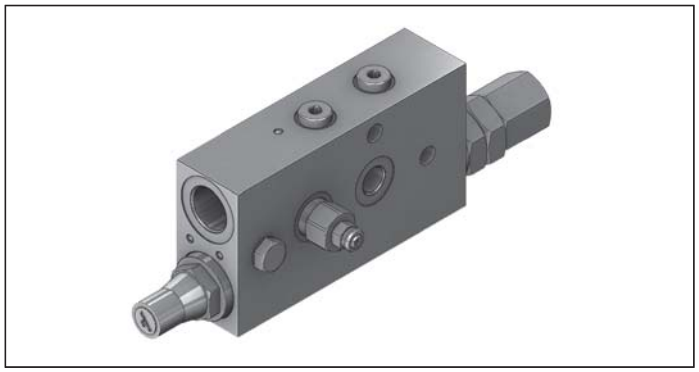

Technical data

Max. operating pressure	420 bar (6000 psi)
Max. flow	100 l/min. (26 gpm)
Weight	2.4 kg (5.3 lbs)
Manifold material	Zinc plated steel
Fluid	Mineral oil (HL, HLP) according DIN 51524
Fluid temperature range	-30 °C to 100 (-22 to 212 °F)
Viscosity range	10 to 500 mm^2/s (cSt)
Recommended degree of fluid contamination	Class 19/17/14 according to ISO 4406
This valve is designed to be pipe mounted on boom cylinders of hydraulic excavators, and, with specific adjustments, it can become part of load holding and load lowering systems designed to comply with ISO Standard 8643 (hose burst protection).	
Note: the Tank vented port must be connected to a “low pressure tank line” (to the joystick tank line, or to tank directly).	
The Factory sealed “E” screw can be used for Emergency spool opening and boom lowering, in case of pilot pressure failure; once the emergency boom lowering is completed, the “E” screw must be restored to its original position and locked.	
Other technical data	see data sheet 18350-50

Note: for applications outside these parameters, please consult us.

Description

Upstream flow (V2 - C2) to the cylinder is free through a check valve, and reverse flow (C2 - V2) is locked/metered by a leak free spool (1) which provides fine metering in the initial opening stroke. The spool, normally held closed by an adjustable spring force, is remotely controlled by joystick pilot pressure; the pilot pressure required to move the spool is load independent because the spring is vented to Tank. The valve includes a small relief cartridge (2) which senses C2 pressure and opens under overload or shock conditions in order to pilot wide open the metering spool and to allow cylinder pressure to be relieved downstream through the main hose (V2) and through the main control valve.

Note: port identified with M are not protected with calibrated orifice but in direct connection with pressure channels.

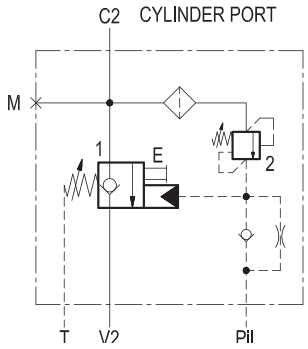

Characteristic curve

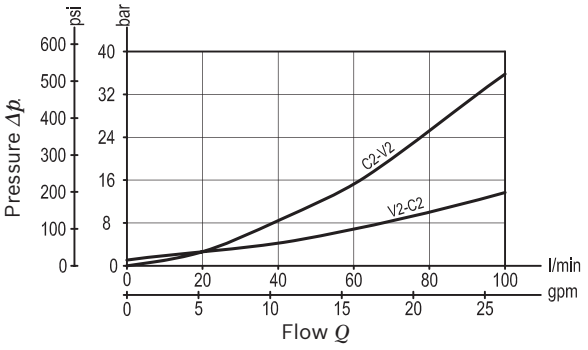

Dimensions [mm (inches)]

Ordering code

08.47.97	X	Y	Z

Check and metering valve

Adjustments

00	Inner hex. socket screw protected by locking nut

Port sizes	V2-C2	Pil	T	M
03	G 1/2	G 1/4	G 1/4	G 1/8

		SPRINGS		
		Adj. pressure range bar (psi)	Pres. increase bar/turn (psi/turn)	Std. setting bar (psi)
40	Valve 1	7-15 (100-220)	4 (58)	7.5 (109) “cracking”
	Valve 2	350-460 (5000-6600)	228 (3306)	350 (5000) “5 l/min”

Tamper resistant cap
ordering code 11.04.31.001
Mat. no. R930000777
for Valve 2

Preferred types

Type	Material number
08479700034000C	R930008035

Type	Material number

Dimensions

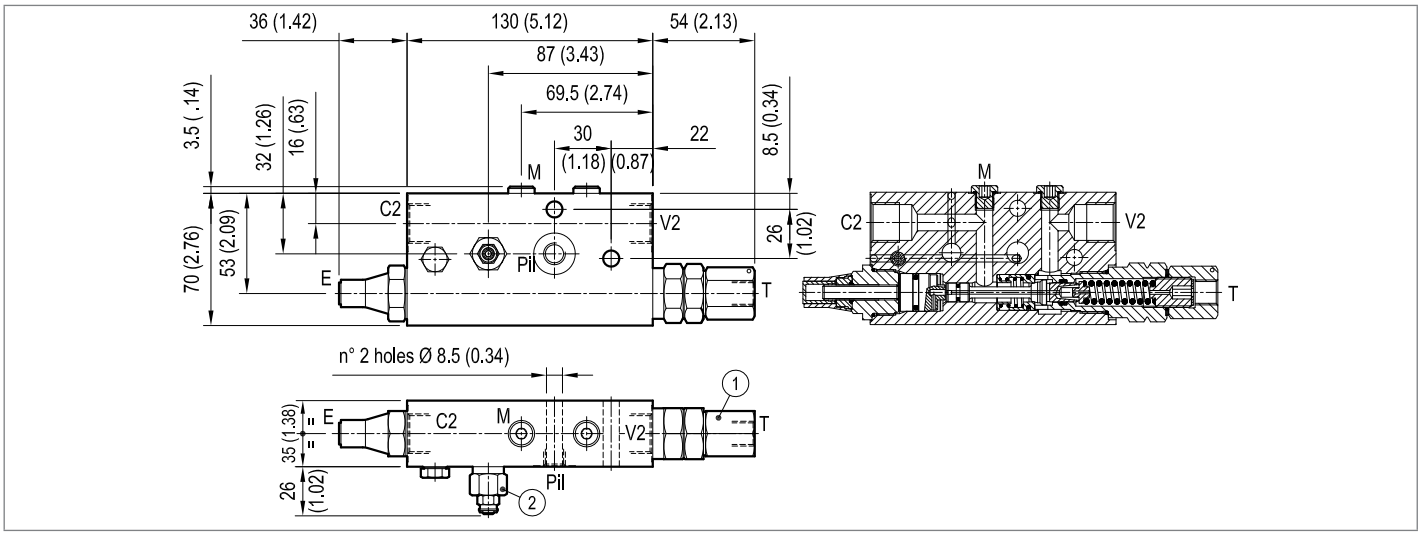

Check and metering valve

A-VBC-90-SX

08.47.96 - X - Y - Z

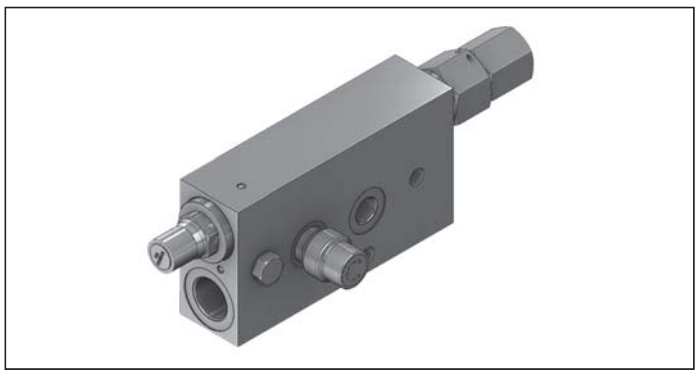

Description

Upstream flow (V2 - C2) to the cylinder is free through a check valve, and reverse flow (C2 - V2) is locked/metered by a leak free spool (1) which provides fine metering in the initial opening stroke. The spool, normally held closed by an adjustable spring force, is remotely controlled by joystick pilot pressure; the pilot pressure required to move the spool is load independent because the spring is vented to Tank. The valve includes a small relief cartridge (2) which senses C2 pressure and opens under overload or shock conditions in order to pilot wide open the metering spool and to allow cylinder pressure to be relieved downstream through the main hose (V2) and through the main control valve.

Note: port identified with M are not protected with calibrated orifice but in direct connection with pressure channels.

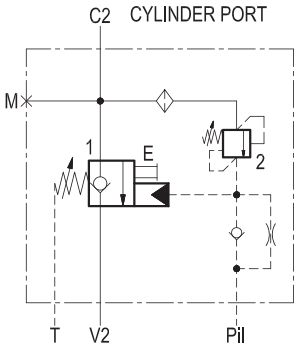

Technical data

Max. operating pressure	420 bar (6000 psi)
Max. flow	100 l/min. (26 gpm)
Weight	2.4 kg (5.3 lbs)
Manifold material	Zinc plated steel
Fluid	Mineral oil (HL, HLP) according DIN 51524
Fluid temperature range	-30 °C to 100 (-22 to 212 °F)
Viscosity range	10 to 500 mm^2/s (cSt)
Recommended degree of fluid contamination	Class 19/17/14 according to ISO 4406
This valve is designed to be pipe mounted on boom cylinders of hydraulic excavators, and, with specific adjustments, it can become part of load holding and load lowering systems designed to comply with ISO Standard 8643 (hose burst protection).	
Note: the Tank vented port must be connected to a “low pressure tank line” (to the joystick tank line, or to tank directly).	
The Factory sealed “E” screw can be used for Emergency spool opening and boom lowering, in case of pilot pressure failure; once the emergency boom lowering is completed, the “E” screw must be restored to its original position and locked.	
Other technical data	see data sheet 18350-50

Note: for applications outside these parameters, please consult us.

Characteristic curve

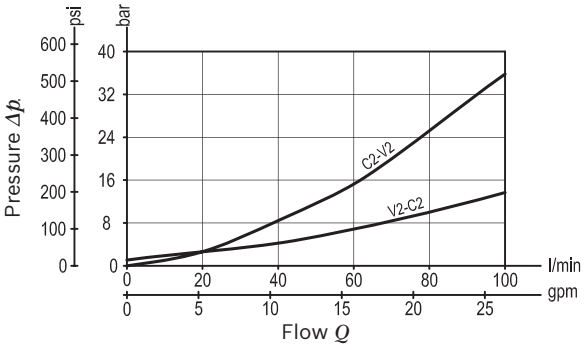

Ordering code

08.47.96	X	Y	Z

Check and metering valve

Adjustments

00	Inner hex. socket screw protected by locking nut

		SPRINGS		
		Adj. pressure range bar (psi)	Pres. increase bar/turn (psi/turn)	Std. setting bar (psi)
40	Valve 1	7-15 (100-220)	4 (58)	7.5 (109) “cracking”
	Valve 2	350-460 (5000-6600)	228 (3306)	350 (5000) “5 l/min”

Port sizes	V2-C2	Pil	T	M
03	G 1/2	G 1/4	G 1/4	G 1/8

Tamper resistant cap
ordering code 11.04.31.001
Mat. no. R930000777
for Valve 2

Preferred types

Type	Material number
08479600034000B	R987274543

Type	Material number

Dimensions

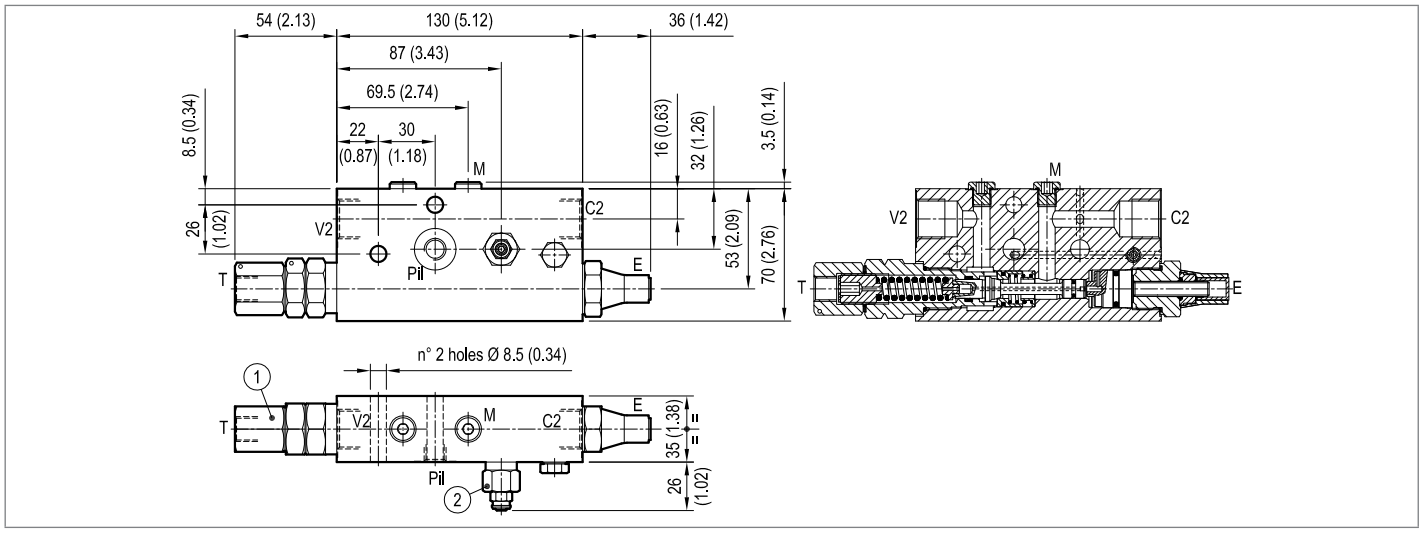

Check and metering valve

A-VBC-33-DX

08.49.24 - X - Y - Z

Description

Upstream flow (V2 - C2) to the cylinder is free through a check valve, and reverse flow (C2 - V2) is locked/metered by a leak free spool (1) which provides fine metering in the initial opening stroke. The spool, normally held closed by an adjustable spring force, is remotely controlled by joystick pilot pressure; the pilot pressure required to move the spool is load independent because the spring is vented to Tank. The valve includes a small relief cartridge (2) which senses C2 pressure and opens under overload or shock conditions in order to pilot wide open the metering spool and to allow cylinder pressure to be relieved downstream through the main hose (V2) and through the main control valve.

Note: port identified with M are not protected with calibrated orifice but in direct connection with pressure channels.

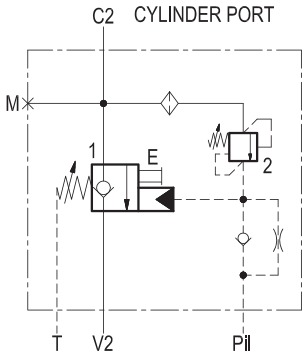

Technical data

Max. operating pressure	420 bar (6000 psi)
Max. flow	150 l/min. (40 gpm)
Weight	3.4 kg (5.3 lbs)
Manifold material	Zinc plated steel
Fluid	Mineral oil (HL, HLP) according DIN 51524
Fluid temperature range	-30 °C to 100 (-22 to 212 °F)
Viscosity range	10 to 500 mm^2/s (cSt)
Recommended degree of fluid contamination	Class 19/17/14 according to ISO 4406
This valve is designed to be pipe mounted on boom cylinders of hydraulic excavators, and, with specific adjustments, it can become part of load holding and load lowering systems designed to comply with ISO Standard 8643 (hose burst protection).	
Note: the Tank vented port must be connected to a “low pressure tank line” (to the joystick tank line, or to tank directly).	
The Factory sealed “E” screw can be used for Emergency spool opening and boom lowering, in case of pilot pressure failure; once the emergency boom lowering is completed, the “E” screw must be restored to its original position and locked.	
Other technical data	see data sheet 18350-50
Relief setting: at least 1.3 times the highest expected load.	

Note: for applications outside these parameters, please consult us.

Characteristic curve

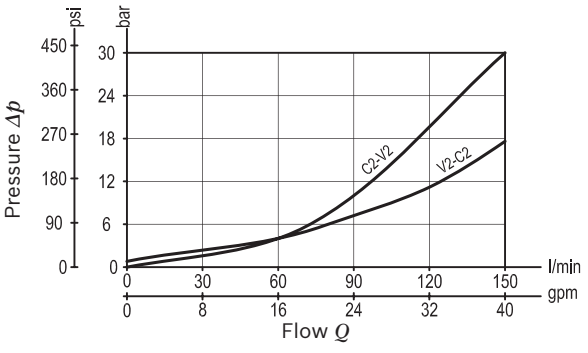

Ordering code

08.49.24	X	Y	Z

Check and metering valve

Pilot ratio

03	Inner hex. socket screw protected by locking nut

Port sizes	V2 - C2	Pil - T
04	G 3/4	G 1/4

		SPRINGS		
		Adj. pressure range bar (psi)	Pres. increase bar/turn (psi/turn)	Std. setting bar (psi)
40	Valve 1	7-20 (102-290)	3.2 (51)	7.5 (109) “cracking”
	Valve 2	350-460 (5000-6000)	228 (3306)	350 (5000) “5 l/min”

Tamper resistant cap
ordering code 11.04.31.001
Mat. no. R930000777
for Valve 2

Preferred types

Type	Material number
08492403044000D	R930006289

Type	Material number

Dimensions

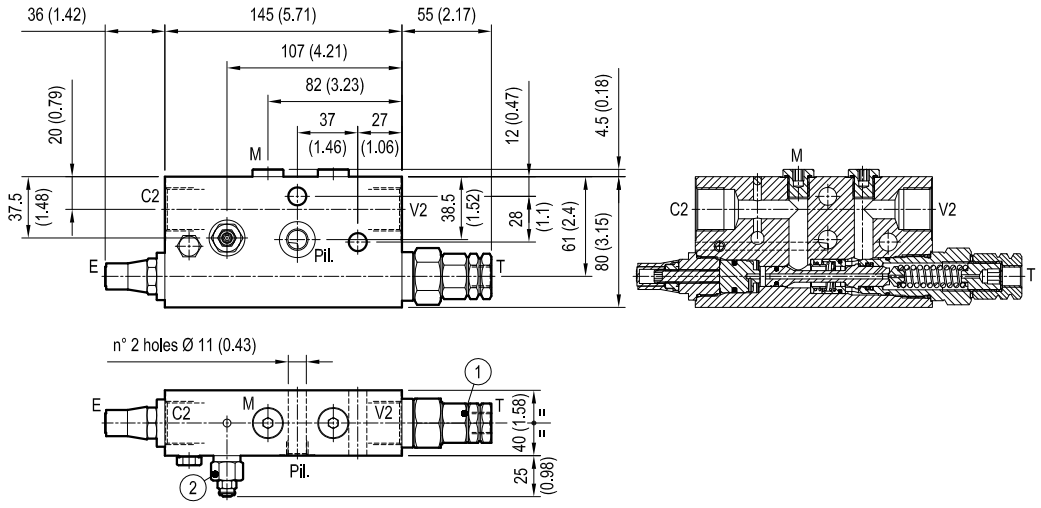

Check and metering valve

A-VBC-33-SX

08.49.25 - X - Y - Z

Technical data

Max. operating pressure	420 bar (6000 psi)
Max. flow	150 l/min. (40 gpm)
Weight	3.4 kg (7.5 lbs)
Manifold material	Zinc plated steel
Fluid	Mineral oil (HL, HLP) according DIN 51524
Fluid temperature range	-30 °C to 100 (-22 to 212 °F)
Viscosity range	10 to 500 mm^2/s (cSt)
Recommended degree of fluid contamination	Class 19/17/14 according to ISO 4406
This valve is designed to be pipe mounted on boom cylinders of hydraulic excavators, and, with specific adjustments, it can become part of load holding and load lowering systems designed to comply with ISO Standard 8643 (hose burst protection).	
Note: the Tank vented port must be connected to a “low pressure tank line” (to the joystick tank line, or to tank directly).	
The Factory sealed “E” screw can be used for Emergency spool opening and boom lowering, in case of pilot pressure failure; once the emergency boom lowering is completed, the “E” screw must be restored to its original position and locked.	
Other technical data	see data sheet 18350-50

Note: for applications outside these parameters, please consult us.

Description

Upstream flow (V2 - C2) to the cylinder is free through a check valve, and reverse flow (C2 - V2) is locked/metered by a leak free spool (1) which provides fine metering in the initial opening stroke. The spool, normally held closed by an adjustable spring force, is remotely controlled by joystick pilot pressure; the pilot pressure required to move the spool is load independent because the spring is vented to Tank. The valve includes a small relief cartridge (2) which senses C2 pressure and opens under overload or shock conditions in order to pilot wide open the metering spool and to allow cylinder pressure to be relieved downstream through the main hose (V2) and through the main control valve.

Note: port identified with M are not protected with calibrated orifice but in direct connection with pressure channels.

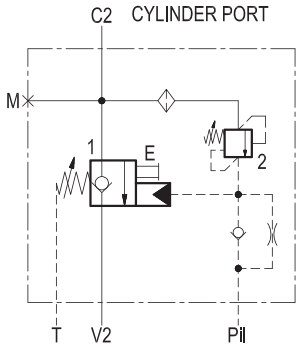

Characteristic curve

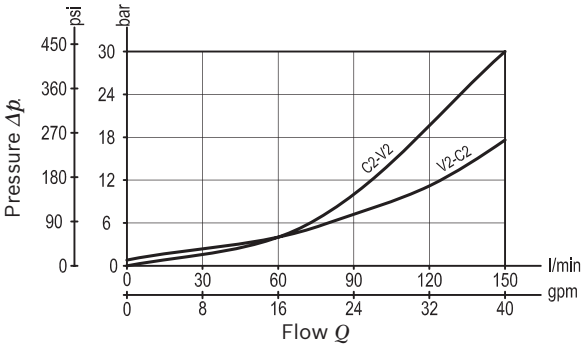

Dimensions [mm (inches)]

Ordering code

08.49.25	X	Y	Z

Check and metering valve

Adjustments

03	Inner hex. socket screw protected by locking nut

Port sizes	V2-C2	Pil	T	
04	G 3/4	G 1/4	G 1/4	

		SPRINGS		
		Adj. pressure range bar (psi)	Pres. increase bar/turn (psi/turn)	Std. setting bar (psi)
40	Valve 1	7-20 (100-290)	3.5 (51)	7.5 (109) “cracking”
	Valve 2	350-460 (5000-6600)	228 (3306)	350 (5000) “5 l/min”

Tamper resistant cap
ordering code 11.04.31.001
Mat. no. R930000777
for Valve 2

Preferred types

Type	Material number
08492503044000D	R930050748

Type	Material number

Dimensions

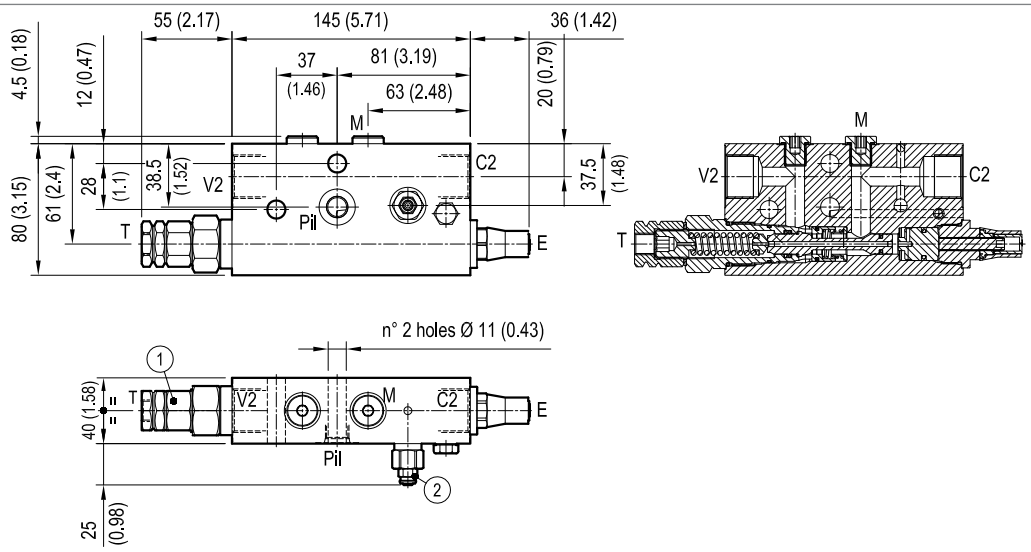

Check and metering valve flangeable

A-VBC-90-FC

08.47.83 - X - Y - Z

Description

Upstream flow (V2 - C2) to the cylinder is free through a check valve, and reverse flow (C2 - V2) is locked/metered by a leak free spool (1) which provides fine metering in the initial opening stroke. The spool, normally held closed by an adjustable spring force, is remotely controlled by joystick pilot pressure; the pilot pressure required to move the spool is load independent because the spring is vented to Tank. The valve includes a small relief cartridge (2) which senses C2 pressure and opens under overload or shock conditions in order to pilot wide open the metering spool and to allow cylinder pressure to be relieved downstream through the main hose (V2) and through the main control valve. For better safety and compact assembly, the C2 port is gasket mounted directly on the actuator.

Technical data

Max. operating pressure	420 bar (6000 psi)
Max. flow	120 l/min. (32 gpm)
Weight	4 kg (8.8 lbs)
Flange seal kit [1]	E00000000000001 (R930004531)
Manifold material	Zinc plated steel
Fluid	Mineral oil (HL, HLP) according DIN 51524
Fluid temperature range	-30 °C to 100 (-22 to 212 °F)
Viscosity range	10 to 500 mm^2/s (cSt)
Recommended degree of fluid contamination	Class 19/17/14 according to ISO 4406
This valve is designed to be pipe mounted on boom cylinders of hydraulic excavators, and, with specific adjustments, it can become part of load holding and load lowering systems designed to comply with ISO Standard 8643 (hose burst protection).	
Note: the Tank vented port must be connected to a “low pressure tank line” (to the joystick tank line, or to tank directly).	
The restricted “E” port must be connected to a “pressure equalizing line” in case of 2 valves fitted to 2 twin cylinders, and may be used as “outlet to tank” for emergency boom lowering in case of pilot pressure failure.	
Other technical data	see data sheet 18350-50

Note: for applications outside these parameters, please consult us.

[1] Seals for 10 valves.

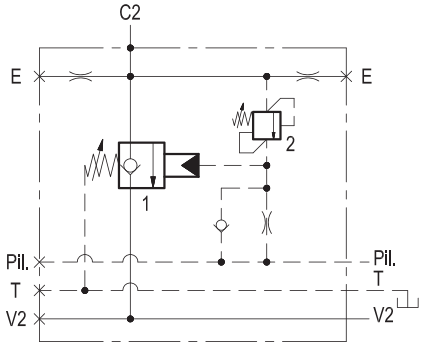

Characteristic curve

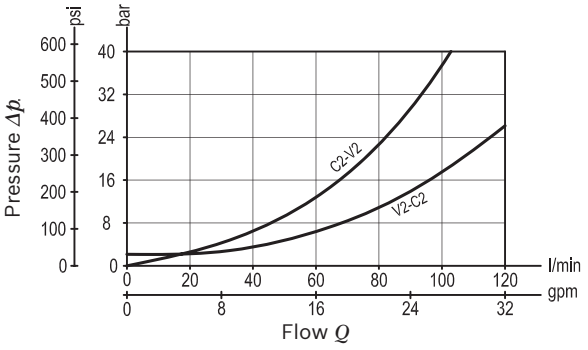

Dimensions [mm (inches)]

Ordering code

08.47.83	X	Y	Z

Check and metering valve

Adjustments

03	Leakproof inner hex. socket screw

		SPRINGS		
		Adj. pressure range bar (psi)	Pres. increase bar/turn (psi/turn)	Std. setting bar (psi)
40	Valve 1	7-15 (100-220)	4 (58)	7.5 (109) “cracking”
	Valve 2	350-460 (5000-6600)	228 (3306)	350 (5000) “5 l/min”

Port sizes	V2	C2	E-Pil-T
63	G 1/2	1/2” SAE 6000	G 1/4

Tamper resistant cap
ordering code 11.04.31.001
Mat. no. R930000777
for Valve 2

Preferred types

Type	Material number
08478303634000B	R930043634

Type	Material number

Dimensions

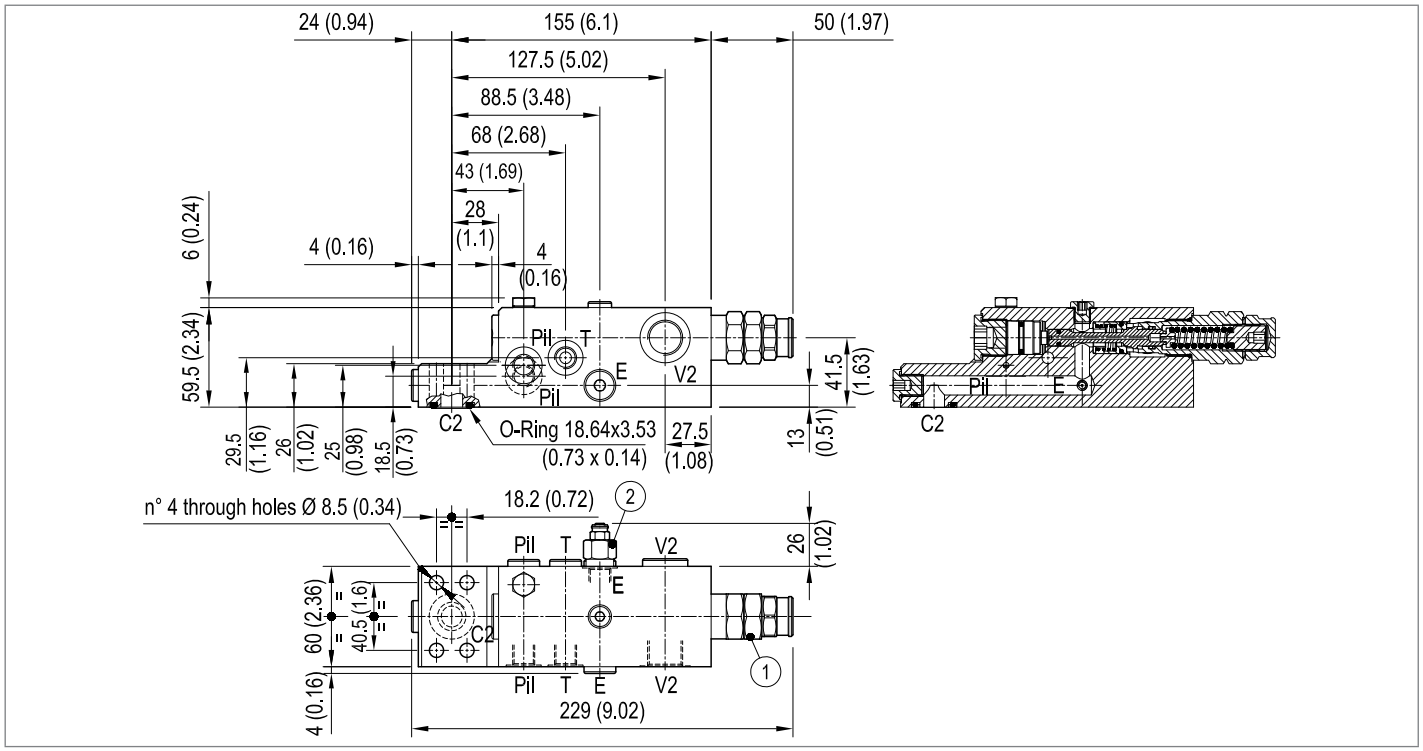

Check and metering valve flangeable

A-VBC-33-FC

08.49.26 - X - Y - Z

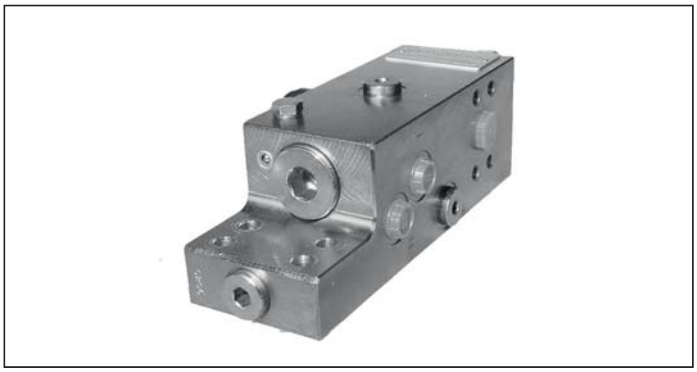

Description

Upstream flow (V2 - C2) to the cylinder is free through a check valve, and reverse flow (C2 - V2) is locked/metered by a leak free spool (1) which provides fine metering in the initial opening stroke. The spool, normally held closed by an adjustable spring force, is remotely controlled by joy-stick pilot pressure; the pilot pressure required to move the spool is load independent because the spring is vented to Tank. The valve includes a small relief cartridge (2) which senses C2 pressure and opens under overload or shock conditions in order to pilot wide open the metering spool and to allow cylinder pressure to be relieved downstream through the main hose (V2) and through the main control valve. For better safety and compact assembly, the C2 port is gasket mounted directly on the actuator.

Technical data

Max. operating pressure	420 bar (6000 psi)
Max. flow	150 l/min. (40 gpm)
Weight	6 kg (13.2 lbs)
Flange seal kit [1]	E00000000000001 (R930004531)
Manifold material	Zinc plated steel
Fluid	Mineral oil (HL, HLP) according DIN 51524
Fluid temperature range	-30 °C to 100 (-22 to 212 °F)
Viscosity range	10 to 500 mm^2/s (cSt)
Recommended degree of fluid contamination	Class 19/17/14 according to ISO 4406
This valve is designed to be pipe mounted on boom cylinders of hydraulic excavators, and, with specific adjustments, it can become part of load holding and load lowering systems designed to comply with ISO Standard 8643 (hose burst protection).	
Note: the Tank vented port must be connected to a “low pressure tank line” (to the joystick tank line, or to tank directly).	
The restricted “E” port must be connected to a “pressure equalizing line” in case of 2 valves fitted to 2 twin cylinders, and may be used as “outlet to tank” for emergency boom lowering in case of pilot pressure failure.	
Other technical data	see data sheet 18350-50

Note: for applications outside these parameters, please consult us.

[1] Seals for 10 valves.

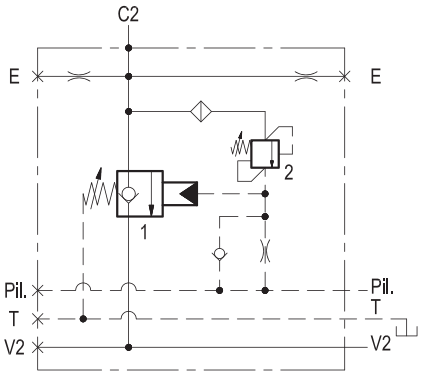

Characteristic curve

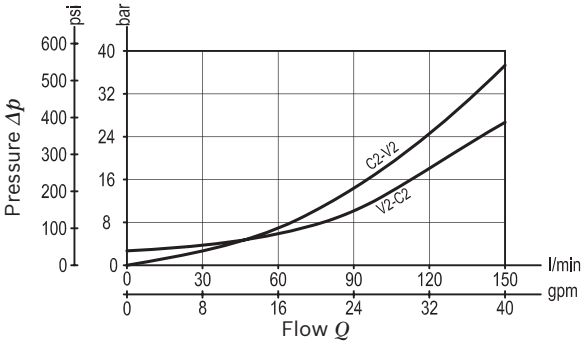

Dimensions [mm (inches)]

Ordering code

08.49.26	X	Y	Z

Check and metering valve flangeable

Pilot ratio

03	Leakproof inner hex. socket screw

Port sizes	V2 - C2	E - Pil - T
63	1/2” SAE 6000	G 1/4

		SPRINGS		
		Adj. pressure range bar (psi)	Pres. increase bar/turn (psi/turn)	Std. setting bar (psi)
11	Valve 1	6-15 (87-220)	5 (73)	7.5 (109) “cracking”
	Valve 2	350-460 (5000-6000)	228 (3306)	350 (5000) “5 l/min”

Tamper resistant cap
code 11.04.30.001 Mat. no. R930000194 for Valve 1
code 11.04.31.001 Mat. no. R930000777 for Valve 2

Preferred types

Type	Material number
08492603631100A	R930050749

Type	Material number

Dimensions

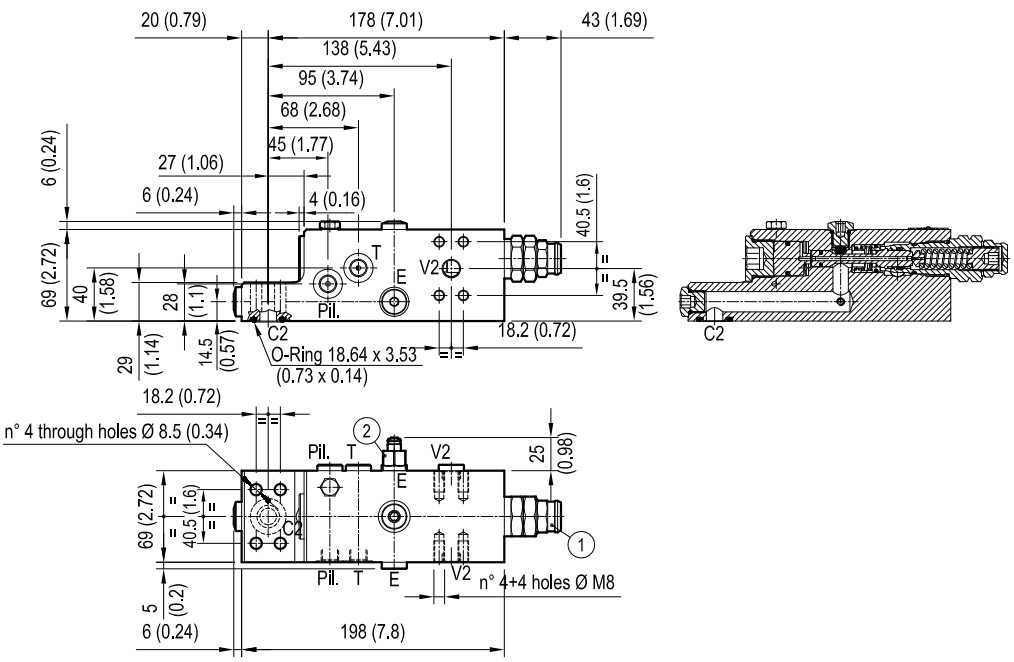

Check and metering valve flangeable

A-VBC-33-FC

08.47.84 - X - Y - Z

Description

Upstream flow (V2 - C2) to the cylinder is free through a check valve, and reverse flow (C2 - V2) is locked/metered by a leak free spool (1) which provides fine metering in the initial opening stroke. The spool, normally held closed by an adjustable spring force, is remotely controlled by joy-stick pilot pressure; the pilot pressure required to move the spool is load independent because the spring is vented to Tank. The valve includes a small relief cartridge (2) which senses C2 pressure and opens under overload or shock conditions in order to pilot wide open the metering spool and to allow cylinder pressure to be relieved downstream through the main hose (V2) and through the main control valve. For better safety and compact assembly, the C2 port is gasket mounted directly on the actuator.

Technical data

Max. operating pressure	420 bar (6000 psi)
Max. flow	250 l/min. (66 gpm)
Weight	8 kg (17.6 lbs)
Flange seal kit [1]	E00000000000002 (R930004532)
Manifold material	Zinc plated steel
Fluid	Mineral oil (HL, HLP) according DIN 51524
Fluid temperature range	-30 °C to 100 (-22 to 212 °F)
Viscosity range	10 to 500 mm^2/s (cSt)
Recommended degree of fluid contamination	Class 19/17/14 according to ISO 4406
This valve is designed to be pipe mounted on boom cylinders of hydraulic excavators, and, with specific adjustments, it can become part of load holding and load lowering systems designed to comply with ISO Standard 8643 (hose burst protection).	
Note: the Tank vented port must be connected to a “low pressure tank line” (to the joystick tank line, or to tank directly).	
The restricted “E” port must be connected to a “pressure equalizing line” in case of 2 valves fitted to 2 twin cylinders, and may be used as “outlet to tank” for emergency boom lowering in case of pilot pressure failure.	
Other technical data	see data sheet 18350-50

Note: for applications outside these parameters, please consult us.

[1] Seals for 10 valves.

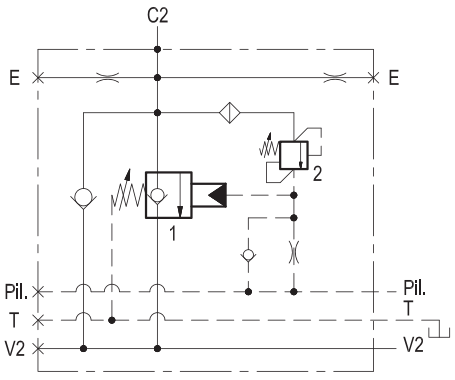

Characteristic curve

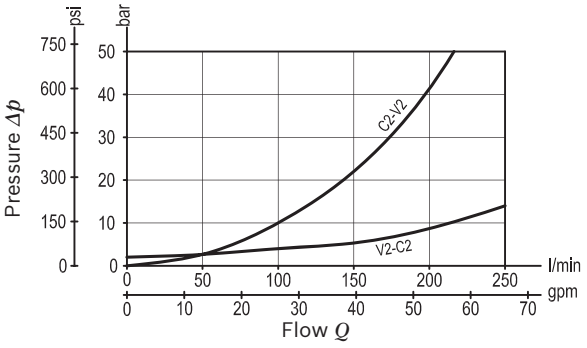

Ordering code

08.47.84	X	Y	Z

Check and metering valve flangeable

Pilot ratio

03	Leakproof inner hex. socket screw

Port sizes	V2 - C2	E - Pil - T
72	3/4” SAE 6000	G 1/4

		SPRINGS		
		Adj. pressure range bar (psi)	Pres. increase bar/turn (psi/turn)	Std. setting bar (psi)
40	Valve 1	6-15 (87-220)	5 (73)	7.5 (109) “cracking”
	Valve 2	350-460 (5000-6000)	228 (3306)	350 (5000) “5 l/min”

Tamper resistant cap
code 11.04.30.001 Mat. no. R930000194 for Valve 1
code 11.04.31.001 Mat. no. R930000777 for Valve 2

Preferred types

Type	Material number
08478403724000C	R930006459

Type	Material number

Dimensions

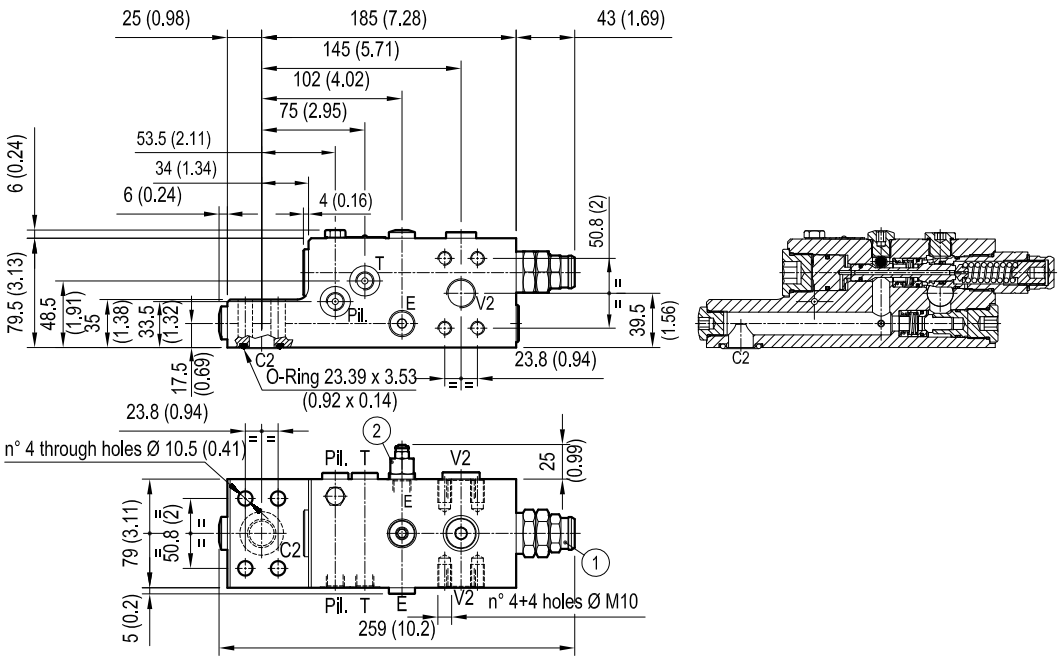

Check and metering valve flangeable

A-VBC-42-FC

08.47.85 - X - 72 - Z

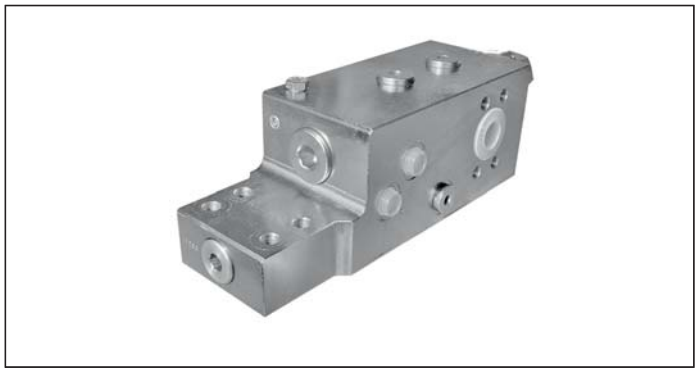

Description

Upstream flow (V2 - C2) to the cylinder is free through the 2 check valves, and reverse flow (C2 - V2) is locked/ metered by a leak free spool (1) which provides fine metering in the initial opening stroke. The spool, normally held closed by an adjustable spring force, is remotely controlled by joystick pilot pressure; the pilot pressure required to move the spool is load independent because the spring is vented to Tank. The valve includes a small relief cartridge (2) which senses C2 pressure and opens under overload or shock conditions in order to pilot wide open the metering spool and to allow cylinder pressure to be relieved downstream through the main hose (V2) and through the main control valve. For better safety and compact assembly, the C2 port is gasket mounted directly on the actuator.

Technical data

Max. operating pressure	420 bar (6000 psi)
Max. flow	350 l/min. (93 gpm)
Weight	12.2 kg (26.9 lbs)
Flange seal kit [1]	E00000000000002 (R930004532)
Manifold material	Zinc plated steel
Fluid	Mineral oil (HL, HLP) according DIN 51524
Fluid temperature range	-30 °C to 100 (-22 to 212 °F)
Viscosity range	10 to 500 mm^2/s (cSt)
Recommended degree of fluid contamination	Class 19/17/14 according to ISO 4406
This valve is designed to be pipe mounted on boom cylinders of hydraulic excavators, and, with specific adjustments, it can become part of load holding and load lowering systems designed to comply with ISO Standard 8643 (hose burst protection).	
Note: the Tank vented port must be connected to a “low pressure tank line” (to the joystick tank line, or to tank directly).	
The restricted “E” port must be connected to a “pressure equalizing line” in case of 2 valves fitted to 2 twin cylinders, and may be used as “outlet to tank” for emergency boom lowering in case of pilot pressure failure.	
Other technical data	see data sheet 18350-50

Note: for applications outside these parameters, please consult us.

[1] Seals for 10 valves.

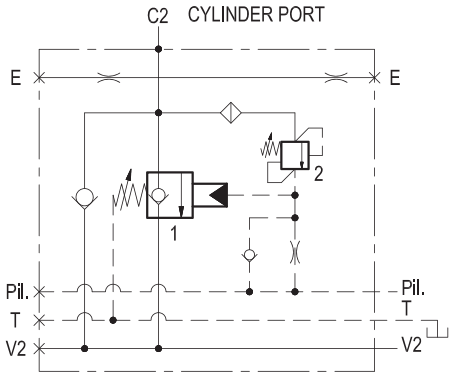

Characteristic curve

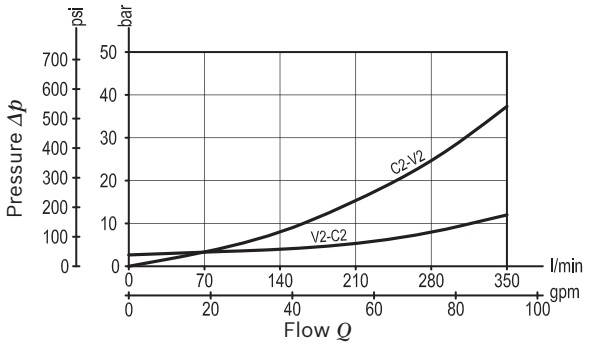

Ordering code

08.47.85	X	72	Z

Check and metering valve flangeable

Pilot ratio

= 03 Leakproof inner hex. socket screw

Port sizes	V2 - C2	E - Pil - T
	3/4” SAE 6000	G 1/4

		SPRINGS		
		Adj. pressure range bar (psi)	Pres. increase bar/turn (psi/turn)	Std. setting bar (psi)
= 60	Valve 1	6-20 (87-290)	5.7 (83)	7.5 (109) “cracking”
	Valve 2	350-460 (5000-6000)	228 (3306)	350 (5000) “5 l/min”

Tamper resistant cap
ordering code 11.04.31.001
Mat. no. R930000777
for Valve 2

Preferred types

Type	Material number
08478503726000E	R930050747

Type	Material number

Dimensions

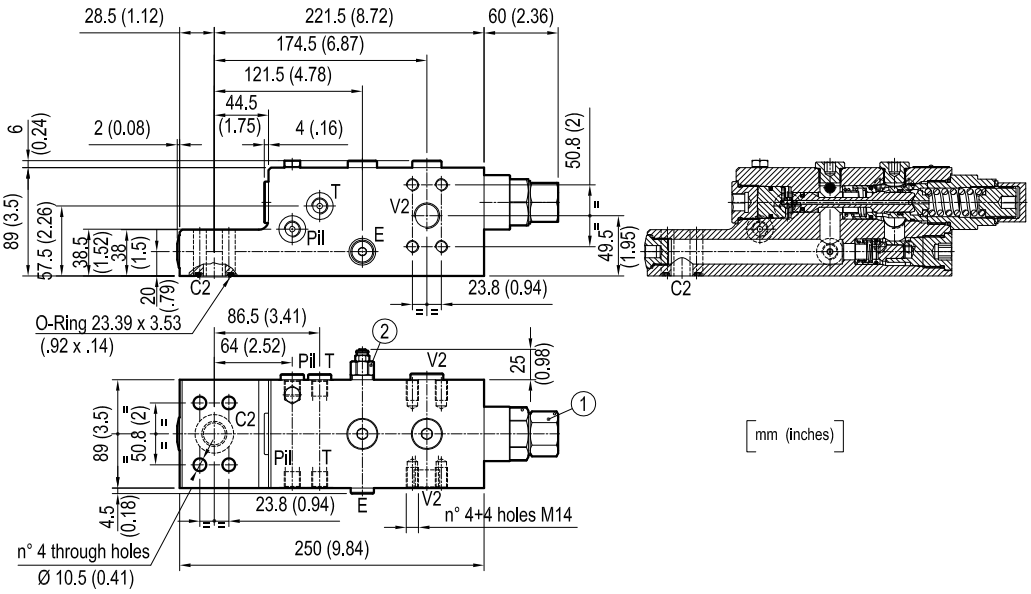

Check and metering valve flangeable

A-VBC-42-FC

08.47.85 - X - 73 - Z

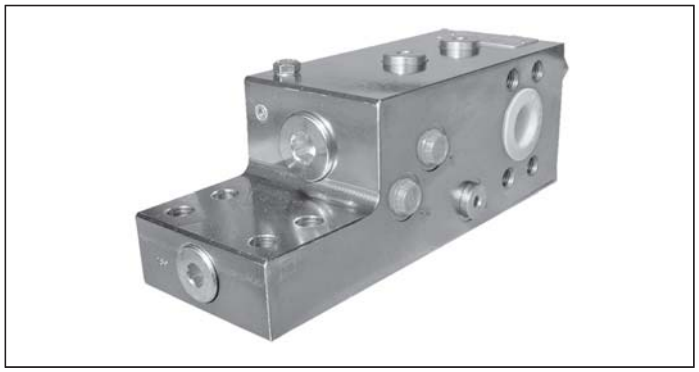

Description

Upstream flow (V2 - C2) to the cylinder is free through a check valve, and reverse flow (C2 - V2) is locked/metered by a leak free spool (1) which provides fine metering in the initial opening stroke. The spool, normally held closed by an adjustable spring force, is remotely controlled by joy-stick pilot pressure; the pilot pressure required to move the spool is load independent because the spring is vented to Tank. The valve includes a small relief cartridge (2) which senses C2 pressure and opens under overload or shock conditions in order to pilot wide open the metering spool and to allow cylinder pressure to be relieved downstream through the main hose (V2) and through the main control valve. For better safety and compact assembly, the C2 port is gasket mounted directly on the actuator.

Technical data

Max. operating pressure	420 bar (6000 psi)
Max. flow	400 l/min. (106 gpm)
Weight	12 kg (26.5 lbs)
Flange seal kit [1]	E00000000000003 (R930004533)
Manifold material	Zinc plated steel
Fluid	Mineral oil (HL, HLP) according DIN 51524
Fluid temperature range	-30 °C to 100 (-22 to 212 °F)
Viscosity range	10 to 500 mm^2/s (cSt)
Recommended degree of fluid contamination	Class 19/17/14 according to ISO 4406
This valve is designed to be pipe mounted on boom cylinders of hydraulic excavators, and, with specific adjustments, it can become part of load holding and load lowering systems designed to comply with ISO Standard 8643 (hose burst protection).	
Note: the Tank vented port must be connected to a “low pressure tank line” (to the joystick tank line, or to tank directly).	
The restricted “E” port must be connected to a “pressure equalizing line” in case of 2 valves fitted to 2 twin cylinders, and may be used as “outlet to tank” for emergency boom lowering in case of pilot pressure failure.	
Other technical data	see data sheet 18350-50

Note: for applications outside these parameters, please consult us.

[1] Seals for 10 valves.

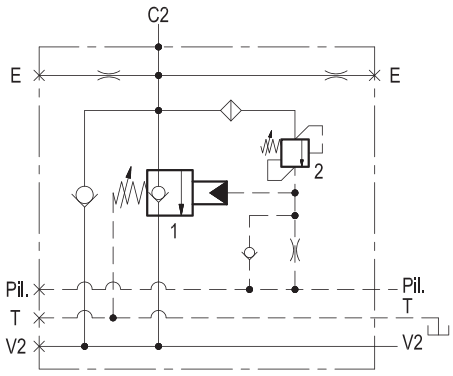

Characteristic curve

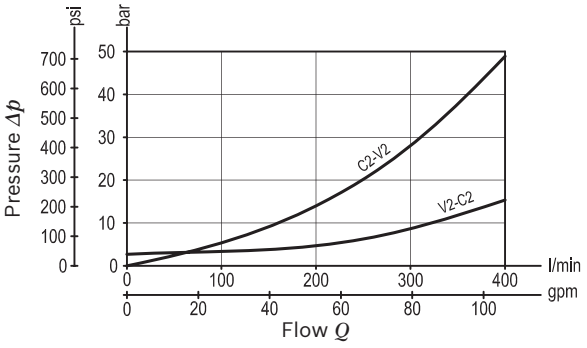

Dimensions [mm (inches)]

Ordering code

08.47.85	X	73	Z

Check and metering valve flangeable

Pilot ratio

03	Leakproof inner hex. socket screw

Port sizes	V2 - C2	E - Pil - T
73	1” SAE 6000	G 1/4

		SPRINGS		
		Adj. pressure range bar (psi)	Pres. increase bar/turn (psi/turn)	Std. setting bar (psi)
40	Valve 1	6-15 (87-220)	3.5 (51)	7.5 (109) “cracking”
	Valve 2	350-460 (5000-6000)	228 (3306)	350 (5000) “5 l/min”

Tamper resistant cap
ordering code 11.04.31.001
Mat. no. R930000777
for Valve 2

Preferred types

Type	Material number
08478503734000C	R930006450

Type	Material number

Dimensions

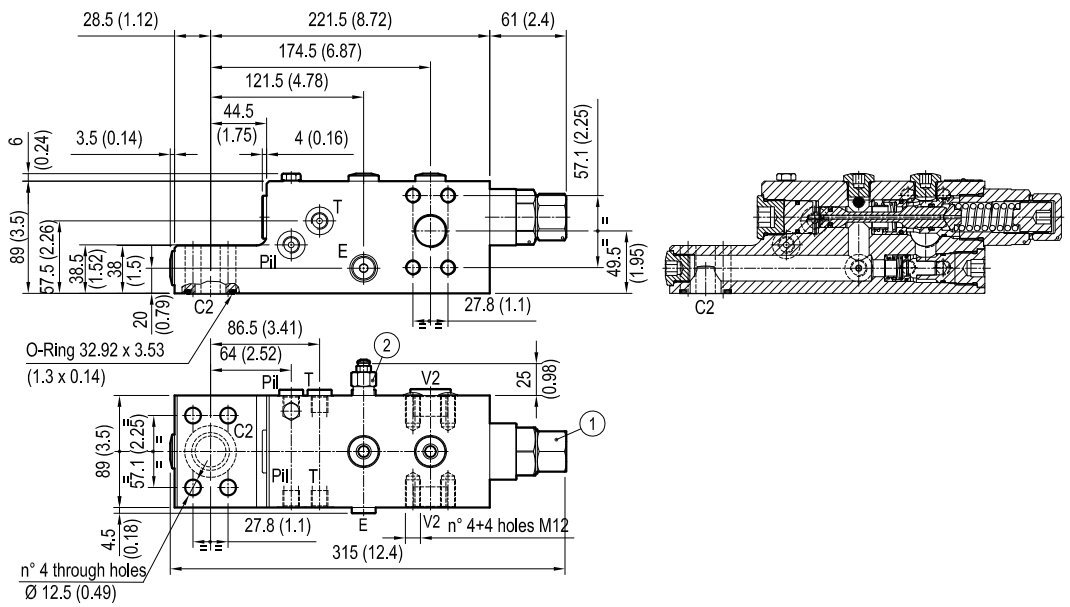

Check and metering valve flangeable

A-VBC-42-FC

08.47.85 - X - 64 - Z

Description

Upstream flow (V2 - C2) to the cylinder is free through a check valve, and reverse flow (C2 - V2) is locked/metered by a leak free spool (1) which provides fine metering in the initial opening stroke. The spool, normally held closed by an adjustable spring force, is remotely controlled by joy-stick pilot pressure; the pilot pressure required to move the spool is load independent because the spring is vented to Tank. The valve includes a small relief cartridge (2) which senses C2 pressure and opens under overload or shock conditions in order to pilot wide open the metering spool and to allow cylinder pressure to be relieved downstream through the main hose (V2) and through the main control valve. For better safety and compact assembly, the C2 port is gasket mounted directly on the actuator.

Technical data

Max. operating pressure	420 bar (6000 psi)
Max. flow	500 l/min. (132 gpm)
Weight	15 kg (33.1 lbs)
Flange seal kit [1]	E00000000000004 (R930004534)
Manifold material	Zinc plated steel
Fluid	Mineral oil (HL, HLP) according DIN 51524
Fluid temperature range	-30 °C to 100 (-22 to 212 °F)
Viscosity range	10 to 500 mm^2/s (cSt)
Recommended degree of fluid contamination	Class 19/17/14 according to ISO 4406
This valve is designed to be pipe mounted on boom cylinders of hydraulic excavators, and, with specific adjustments, it can become part of load holding and load lowering systems designed to comply with ISO Standard 8643 (hose burst protection).	
Note: the Tank vented port must be connected to a “low pressure tank line” (to the joystick tank line, or to tank directly).	
The restricted “E” port must be connected to a “pressure equalizing line” in case of 2 valves fitted to 2 twin cylinders, and may be used as “outlet to tank” for emergency boom lowering in case of pilot pressure failure.	
Other technical data	see data sheet 18350-50

Note: for applications outside these parameters, please consult us.

[1] Seals for 10 valves.

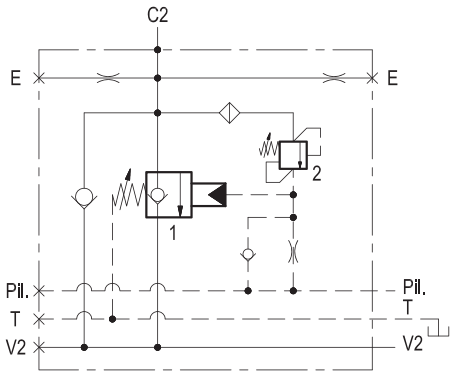

Characteristic curve

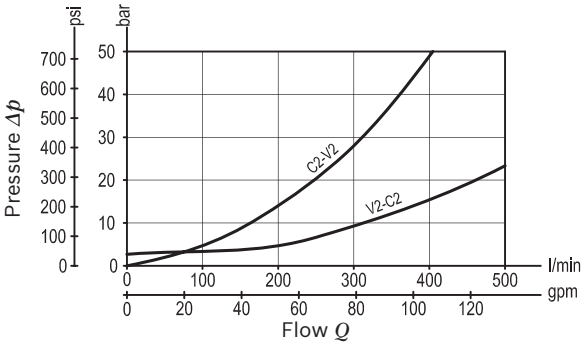

Dimensions [mm (inches)]

Ordering code

08.47.85	X	64	Z

Check and metering valve flangeable

Pilot ratio

03	Leakproof inner hex. socket screw

Port sizes	V2 - C2	E - Pil - T
64	1 1/4” SAE 6000	G 1/4

		SPRINGS		
		Adj. pressure range bar (psi)	Pres. increase bar/turn (psi/turn)	Std. setting bar (psi)
40	Valve 1	6-15 (87-220)	3.5 (51)	7.5 (109) “cracking”
	Valve 2	350-460 (5000-6700)	228 (3306)	350 (5000) “5 l/min”

Tamper resistant cap
ordering code 11.04.31.001
Mat. no. R930000777
for Valve 2

Preferred types

Type	Material number
08478503644000D	R930050746

Type	Material number

Dimensions

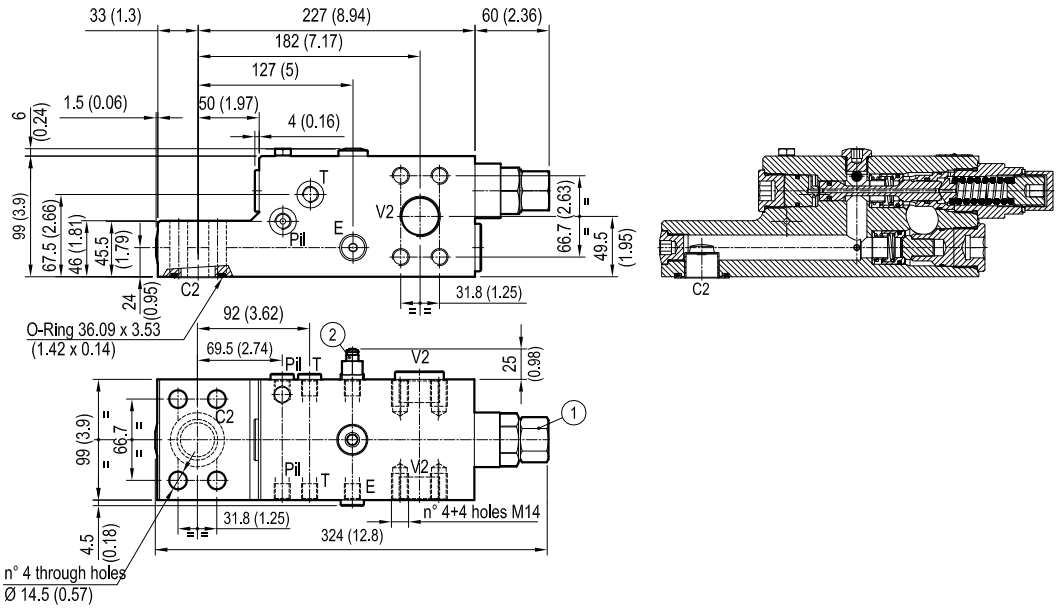

Check and metering valve flangeable

A-VBCN-15-FC

08.35.23.07 - Y - Z

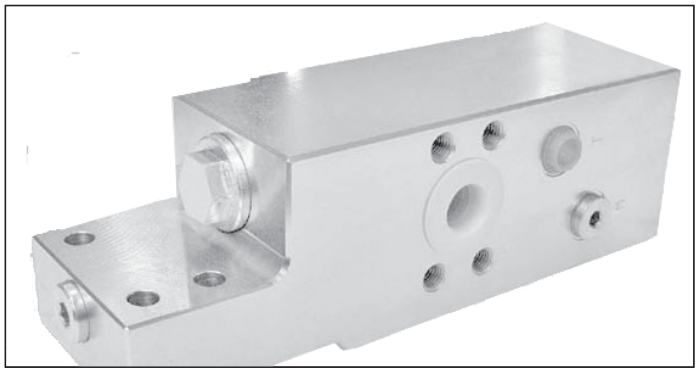

Description

Unrestricted upstream flow (A – A1) to the cylinder is possible through the check valve (1), while downstream flow (A1 – A) is locked by the leak free main spool (2) which is held closed by the spring and by the load induced pressure. With pilot pressure at X (joystick), the spool (2) is first vented to tank then it is remotely controlled and it slides to provide metering for the downstream flow; after the initial venting, the pilot pressure required to move the spool is load independent. The downstream (A1 – A) metering curve and the cracking pressure are factory designed and set for the specific type of machine and cannot be adjusted. The valve includes a small relief cartridge (3) which senses the A1 pressure (load induced) and opens under overload or shock conditions in order to pilot fully open the main spool (2): this allows any excess of pressure at A1 to be relieved downstream through A. For better safety and compact assembly, the A1 port is gasket mounted directly on the actuator.

Note: port identified with M are not protected with calibrated orifice but in direct connection with pressure channels.

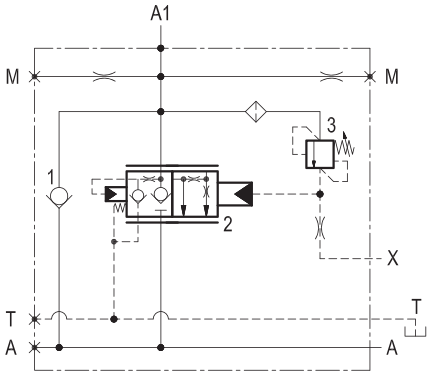

Technical data

Max. operating pressure	420 bar (6000 psi)
Max. flow	200 /min. (53 gpm)
Weight	10 kg (22 lbs)
Flange seal kit [1)]	E00000000000002 (R930004532)
Manifold material	Zinc plated steel
Fluid	Mineral oil (HL, HLP) according DIN 51524
Fluid temperature range	-30 °C to 100 (-22 to 212 °F)
Viscosity range	10 to 500 mm^2/s (cSt)
Recommended degree of fluid contamination	Class 19/17/14 according to ISO 4406
MTTFd	150 years
The Tank vented port must be connected to a “low pressure tank line” (to the joystick tank line, or to tank directly).	
The restricted “M” port must be connected to a “pressure equalizing line” in case of 2 valves fitted to 2 twin cylinders, and may be used as “outlet to tank” for emergency boom lowering in case of pilot pressure failure.	
This valve with specific adjustments, it can become part of load holding and load lowering systems designed to comply with ISO Standard 8643 (hose burst protection).	
Other technical data	see data sheet 18350-50

Note: for applications outside these parameters, please consult us.

[1)] Seals for 10 valves.

Characteristic curve

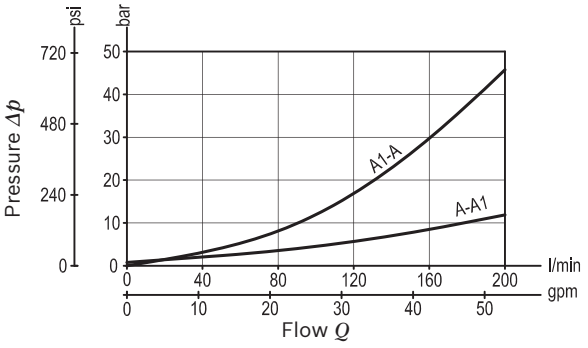

Dimensions [mm (inches)]

Ordering code

08.35.23	07	Y	Z

Check and metering valve flangeable

07	Spool type

Port sizes	A - A1	M-T-X
72	3/4 SAE 6000	G 1/4

		SPRINGS		
		Adj. pressure range bar (psi)	Pres. increase bar/turn (psi/turn)	Std. setting bar (psi)
46	Valve 2			7.5 (109) “cracking”
	Valve 3	350-460 (5000-6700)	228 (3306)	350 (5000) “5 l/min”

Tamper resistant cap
ordering code 11.04.31.001
Mat. no. R930000777
for Valve 3

Preferred types

Type	Material number
083523077246000	R930003567

Type	Material number

Dimensions

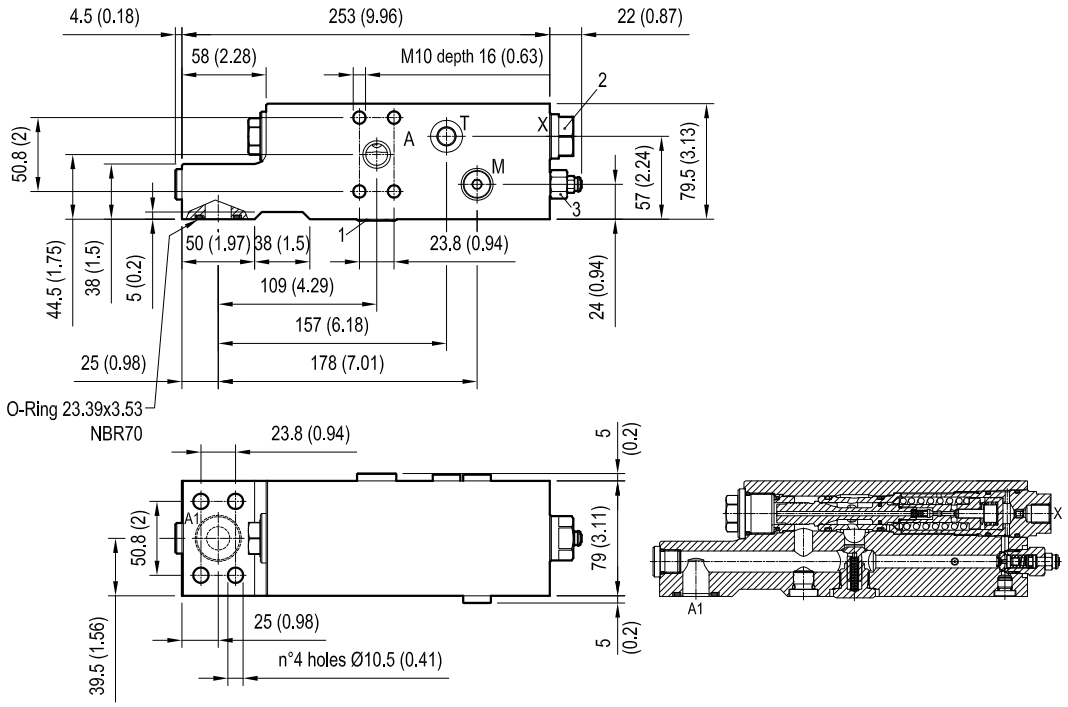

Check and metering valve flangeable

A-VBCN-18-FC

08.37.18.18 - Y - Z

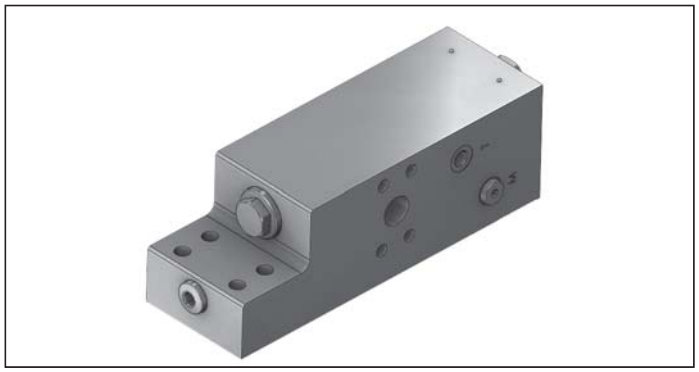

Technical data

Max. operating pressure	420 bar (6000 psi)
Max. flow	300 /min. (79 gpm)
Weight	19 kg (42 lbs)
Flange seal kit [1)]	E00000000000003 (R930004533)
Manifold material	Zinc plated steel
Fluid	Mineral oil (HL, HLP) according DIN 51524
Fluid temperature range	-30 °C to 100 (-22 to 212 °F)
Viscosity range	10 to 500 mm^2/s (cSt)
Recommended degree of fluid contamination	Class 19/17/14 according to ISO 4406
The Tank vented port must be connected to a “low pressure tank line” (to the joystick tank line, or to tank directly).	
The restricted “M” port must be connected to a “pressure equalizing line” in case of 2 valves fitted to 2 twin cylinders, and may be used as “outlet to tank” for emergency boom lowering in case of pilot pressure failure.	
This valve with specific adjustments, it can become part of load holding and load lowering systems designed to comply with ISO Standard 8643 (hose burst protection).	
Other technical data	see data sheet 18350-50

Note: for applications outside these parameters, please consult us.

[1)] Seals for 10 valves.

Description

Unrestricted upstream flow (A – A1) to the cylinder is possible through the check valve (1), while downstream flow (A1 – A) is locked by the leak free main spool (2) which is held closed by the spring and by the load induced pressure. With pilot pressure at X (joystick), the spool (2) is first vented to tank then it is remotely controlled and it slides to provide metering for the downstream flow; after the initial venting, the pilot pressure required to move the spool is load independent. The downstream (A1 – A) metering curve and the cracking pressure are factory designed and set for the specific type of machine and cannot be adjusted. The valve includes a small relief cartridge (3) which senses the A1 pressure (load induced) and opens under overload or shock conditions in order to pilot fully open the main spool (2): this allows any excess of pressure at A1 to be relieved downstream through A. For better safety and compact assembly, the A1 port is gasket mounted directly on the actuator.

Note: port identified with M are not protected with calibrated orifice but in direct connection with pressure channels.

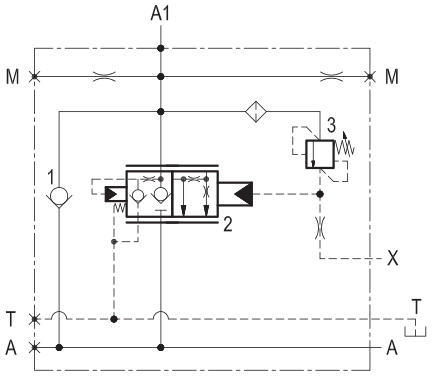

Characteristic curve

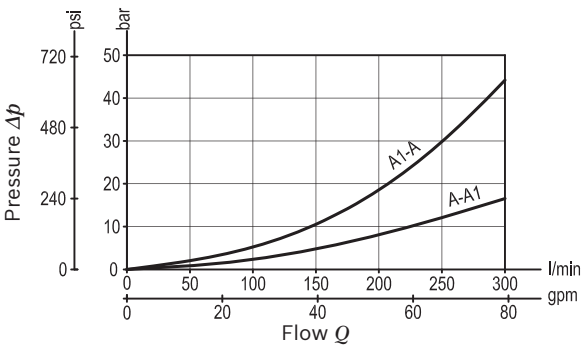

RE 18308-14/03.2013 Bosch Rexroth AG Control Valves

Dimensions [mm (inches)]

Ordering code

08.37.18	18	Y	Z

Check and metering valve flangeable

18	Spool type

Port sizes	A - A1	M-T-X
73	1 SAE 6000	G 1/4

		SPRINGS		
		Adj. pressure range bar (psi)	Pres. increase bar/turn (psi/turn)	Std. setting bar (psi)
46	Valve 2			7.5 (109) “cracking”
	Valve 3	350-460 (5000-6700)	228 (3306)	350 (5000) “5 l/min”

Tamper resistant cap
ordering code 11.04.31.001
Mat. no. R930000777
for Valve 3

Preferred types

Type	Material number
083718187346000	R930003755

Type	Material number

Dimensions

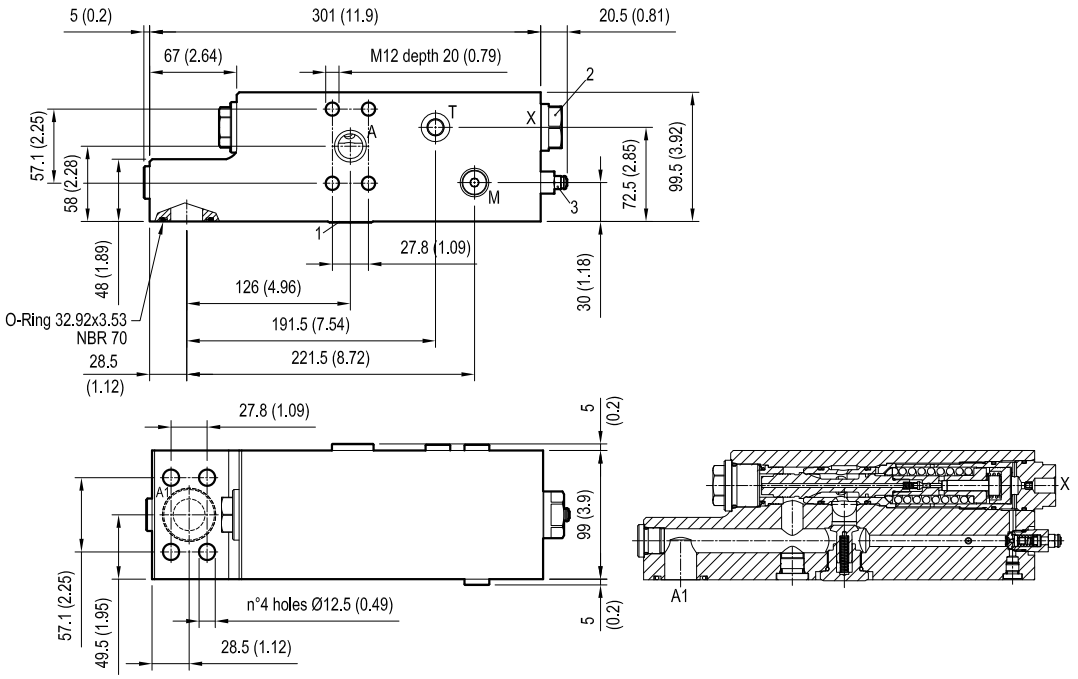

Check and metering valve flangeable

A-VBCN-15-DX-RE-FC

08.39.64 - X - Y - Z

Description

Unrestricted upstream flow (A – A1) to the cylinder is possible through the check valve (1), while downstream flow (A1 – A) is locked by the leak free main spool (2) which is held closed by the spring and by the load induced pressure. With pilot pressure at X (joystick), the spool (2) is first vented to tank then it is remotely controlled and it slides to provide metering for the downstream flow; after the initial venting, the pilot pressure required to move the spool is load independent. The downstream (A1 – A) metering curve and the cracking pressure are factory designed and set for the specific type of machine and cannot be adjusted. The valve includes a small relief cartridge (3) which senses the A1 pressure (load induced) and opens under overload or shock conditions in order to pilot fully open the main spool (2): this allows any excess of pressure at A1 to be relieved downstream through A. For better safety and compact assembly, the A1 port is gasket mounted directly on the actuator.

Technical data

Max. operating pressure	420 bar (6000 psi)
Max. flow	200 /min. (53 gpm)
Weight	12.6 kg (27.8 lbs)
Flange seal kit [1)]	E00000000000002 (R930004532)
Manifold material	Zinc plated steel
Fluid	Mineral oil (HL, HLP) according DIN 51524
Fluid temperature range	-30 °C to 100 (-22 to 212 °F)
Viscosity range	10 to 500 mm^2/s (cSt)
Recommended degree of fluid contamination	Class 19/17/14 according to ISO 4406
MTTFd	150 years
The Tank vented port must be connected to a “low pressure tank line” (to the joystick tank line, or to tank directly).	
The restricted “M” port must be connected to a “pressure equalizing line” in case of 2 valves fitted to 2 twin cylinders, and may be used as “outlet to tank” for emergency boom lowering in case of pilot pressure failure.	
This valve with specific adjustments, it can become part of load holding and load lowering systems designed to comply with ISO Standard 8643 (hose burst protection).	
Other technical data	see data sheet 18350-50

Note: for applications outside these parameters, please consult us.

[1)] Seals for 10 valves.

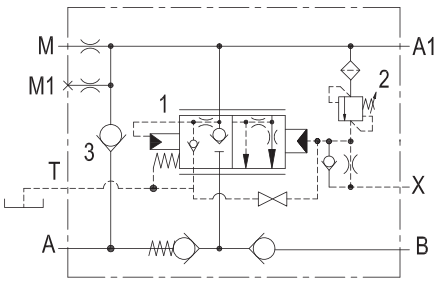

Characteristic curve

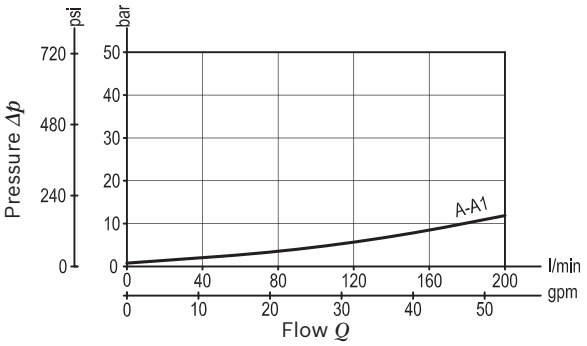

Dimensions [mm (inches)]

Ordering code

08.39.64	X	Y	Z

Check and metering valve flangeable

07	Spool type

Port sizes	A - A1	M-M1-T-X	B
72	3/4 SAE 6000	G 1/4	1/2 SAE 6000

		SPRINGS		
		Adj. pressure range bar (psi)	Pres. increase bar/turn (psi/turn)	Std. setting bar (psi)
46	Valve 1			7.5 (109) “cracking”
	Valve 2	350-460 (5000-6700)	228 (3306)	350 (5000) “5 l/min”

Tamper resistant cap
ordering code 11.04.31.001
Mat. no. R930000777
for Valve 2

Preferred types

Type	Material number
083964077246000	R930007044

Type	Material number

Dimensions

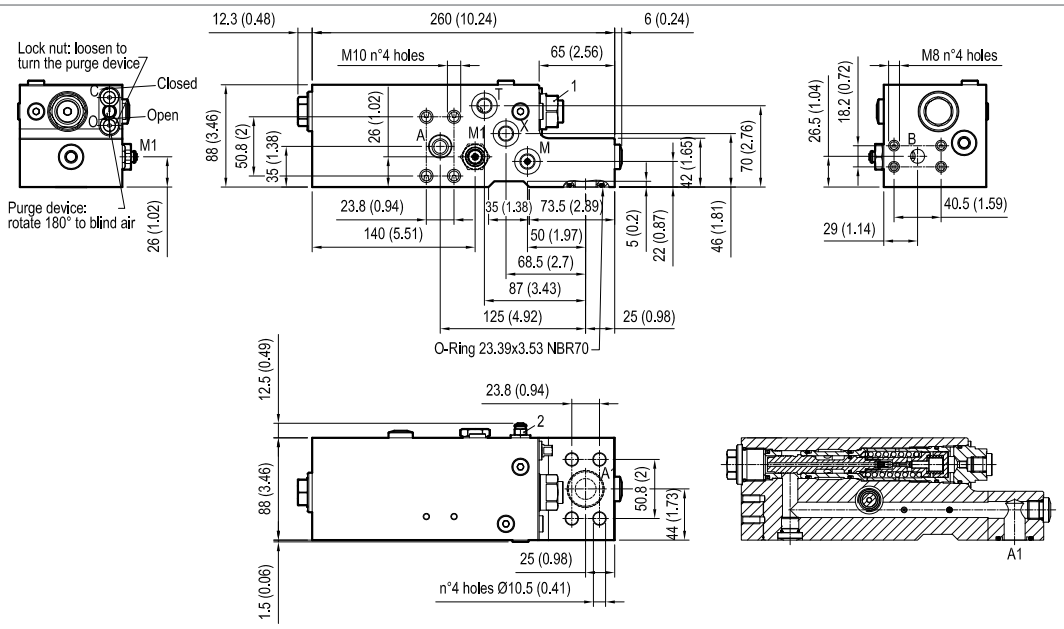

Check and metering valve flangeable

A-VBCN-15-SX-RE-FC

08.39.65 - X - Y - Z

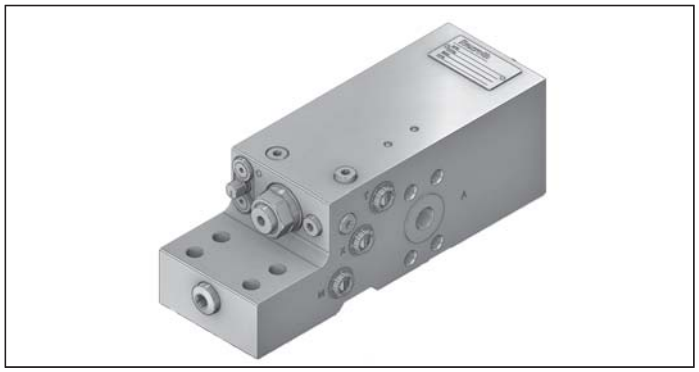

Description

Unrestricted upstream flow (A – A1) to the cylinder is possible through the check valve (1), while downstream flow (A1 – A) is locked by the leak free main spool (2) which is held closed by the spring and by the load induced pressure. With pilot pressure at X (joystick), the spool (2) is first vented to tank then it is remotely controlled and it slides to provide metering for the downstream flow; after the initial venting, the pilot pressure required to move the spool is load independent. The downstream (A1 – A) metering curve and the cracking pressure are factory designed and set for the specific type of machine and cannot be adjusted. The valve includes a small relief cartridge (3) which senses the A1 pressure (load induced) and opens under overload or shock conditions in order to pilot fully open the main spool (2): this allows any excess of pressure at A1 to be relieved downstream through A. For better safety and compact assembly, the A1 port is gasket mounted directly on the actuator.

Technical data

Max. operating pressure	420 bar (6000 psi)
Max. flow	200 /min. (53 gpm)
Weight	12.6 kg (27.8 lbs)
Flange seal kit [1)]	E00000000000002 (R930004532)
Manifold material	Zinc plated steel
Fluid	Mineral oil (HL, HLP) according DIN 51524
Fluid temperature range	-30 °C to 100 (-22 to 212 °F)
Viscosity range	10 to 500 mm^2/s (cSt)
Recommended degree of fluid contamination	Class 19/17/14 according to ISO 4406
The Tank vented port must be connected to a “low pressure tank line” (to the joystick tank line, or to tank directly).	
The restricted “M” port must be connected to a “pressure equalizing line” in case of 2 valves fitted to 2 twin cylinders, and may be used as “outlet to tank” for emergency boom lowering in case of pilot pressure failure.	
This valve with specific adjustments, it can become part of load holding and load lowering systems designed to comply with ISO Standard 8643 (hose burst protection).	
Other technical data	see data sheet 18350-50
Relief setting: at least 1.3 times the highest expected load.	

Note: for applications outside these parameters, please consult us.

[1)] Seals for 10 valves.

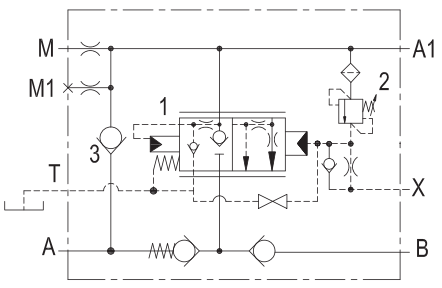

Characteristic curve

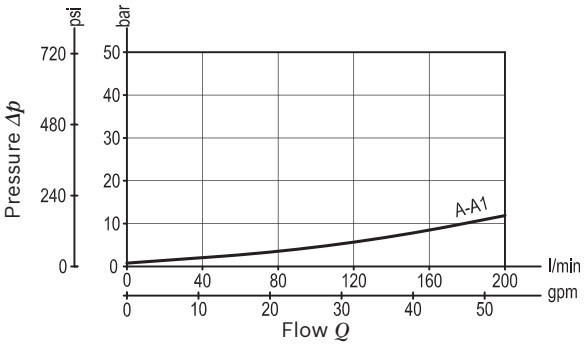

Ordering code

08.39.65	X	Y	Z

Check and metering valve flangeable

07 Spool type

Port sizes	A - A1	M-M1-T-X	B
72	3/4 SAE 6000	G 1/4	1/2 SAE 6000

		SPRINGS		
		Adj. pressure range bar (psi)	Pres. increase bar/turn (psi/turn)	Std. setting bar (psi)
46	Valve 2			7.5 (109) “cracking”
	Valve 3	350-460 (5000-6000)	228 (3306)	350 (5000) “5 l/min”

Tamper resistant cap
ordering code 11.04.31.001
Mat. no. R930000777
for Valve 2

Preferred types

Type	Material number
083965077246000	R930007045

Type	Material number

Dimensions

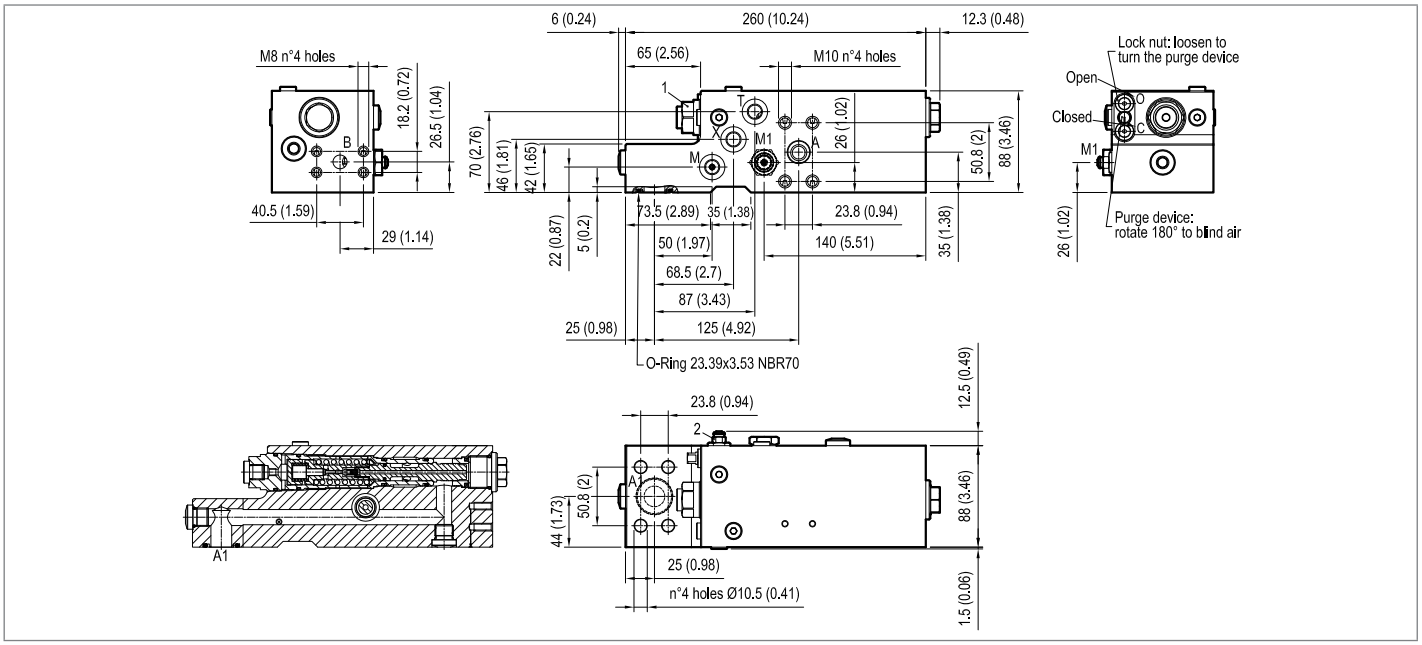

Check and metering valve flangeable

A-VBCN-22-DX-RE-FC

08.39.38 - X - Y - Z

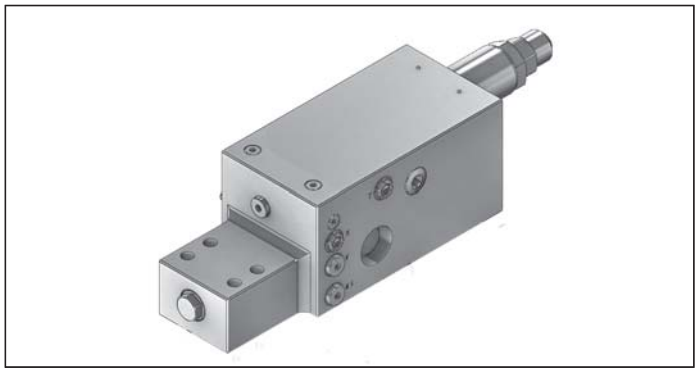

Technical data

Max. operating pressure	420 bar (6000 psi)
Max. flow	400 /min. (106 gpm)
Weight	26 kg (57.3 lbs)
Flange seal kit [1]	E00000000000003 (R930004533)
Manifold material	Zinc plated steel
Fluid	Mineral oil (HL, HLP) according DIN 51524
Fluid temperature range	-30 °C to 100 (-22 to 212 °F)
Viscosity range	10 to 500 mm^2/s (cSt)
Recommended degree of fluid contamination	Class 19/17/14 according to ISO 4406
The Tank vented port must be connected to a “low pressure tank line” (to the joystick tank line, or to tank directly).	
The restricted “M” port must be connected to a “pressure equalizing line” in case of 2 valves fitted to 2 twin cylinders, and may be used as “outlet to tank” for emergency boom lowering in case of pilot pressure failure.	
This valve with specific adjustments, it can become part of load holding and load lowering systems designed to comply with ISO Standard 8643 (hose burst protection).	
Other technical data	see data sheet 18350-50

Note: for applications outside these parameters, please consult us.

[1] Seals for 10 valves.

Description

Unrestricted upstream flow (A – A1) to the cylinder is possible through the check valve (3), while downstream flow (A1 – A ,or A1 – B) is locked by the leak free main spool (1) which is held closed by the spring and by the load induced pressure. With pilot pressure at X (joystick), the spool (1) is first vented to tank then it is remotely controlled and it slides to provide fine metering for the downstream flow; after the initial venting, the pilot pressure required to move the spool is load independent. The return flow (A1 – A) is slightly pressurized by the check valve (4) and is available to re-fill the opposite end of the cylinder through the check valve (5) and port (B), in order to prevent cavitation. The valve includes a small relief cartridge (2) which senses the A1 pressure (load induced) and opens under overload or shock conditions in order to pilot fully open the main spool (1): this allows any excess of pressure at A1 to be relieved downstream through A. For better safety and compact assembly, the A1 port is flanged (gasket mounted) directly on the actuator.

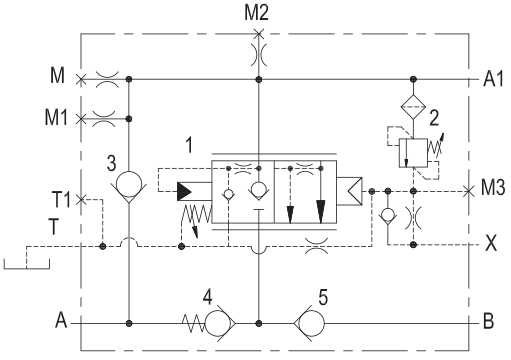

Characteristic curve

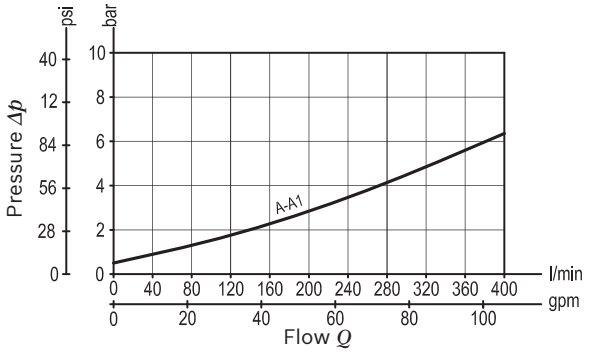

Dimensions [mm (inches)]

Ordering code

08.39.38	X	Y	Z

Check and metering valve flangeable

22	Spool type

Port sizes	A - A1	M-M1-M2-M3-T-T1-X	B
73	1 SAE 6000	G 1/4	3/4 SAE 6000

		SPRINGS		
		Adj. pressure range bar (psi)	Pres. increase bar/turn (psi/turn)	Std. setting bar (psi)
46	Valve 1			7.5 (109) “cracking”
	Valve 2	350-460 (5000-6700)	228 (3306)	350 (5000) “5 l/min”

Tamper resistant cap
ordering code 11.04.31.001
Mat. no. R930000777
for Valve 2

Preferred types

Type	Material number
083938227346000	R930007073

Type	Material number

Dimensions

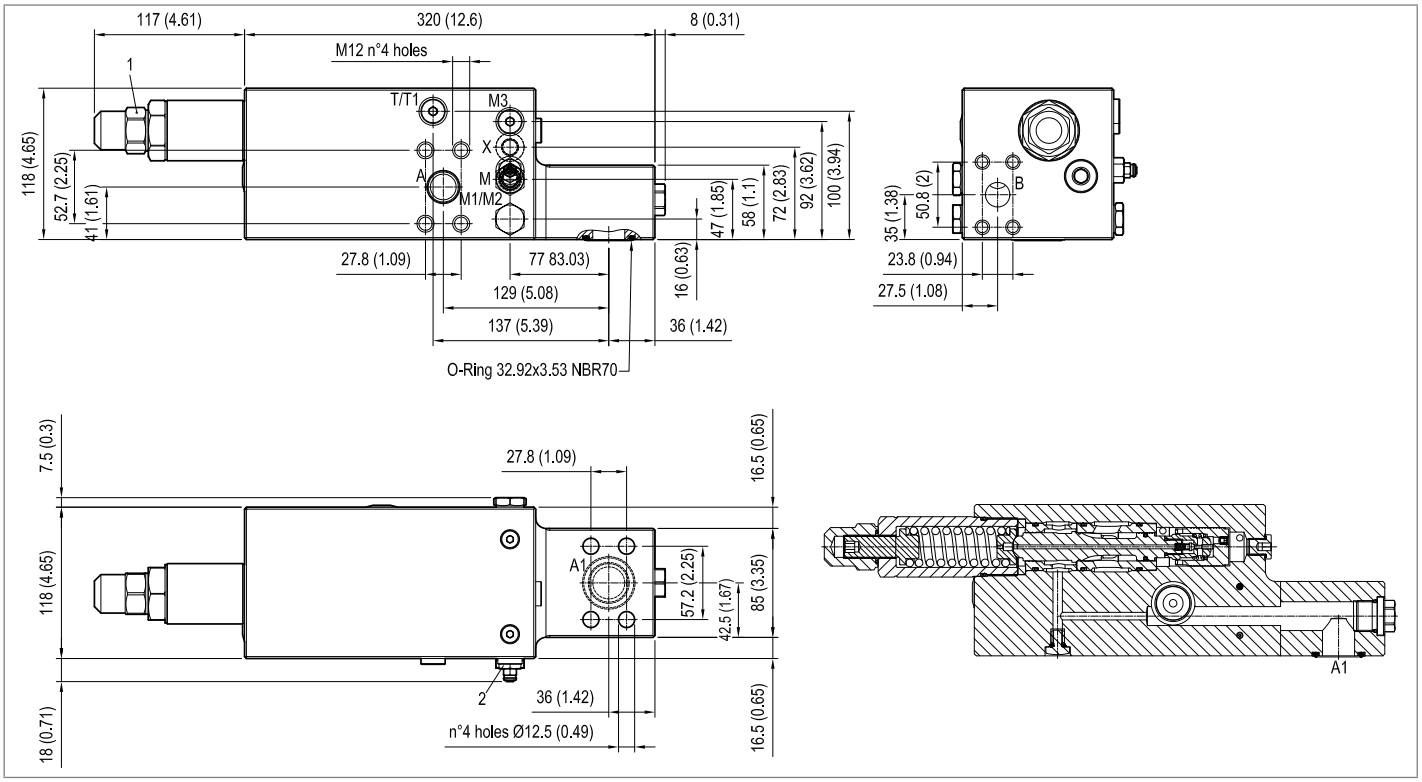

Check and metering valve flangeable

A-VBCN-22-SX-RE-FC

08.39.37 - X - Y - Z

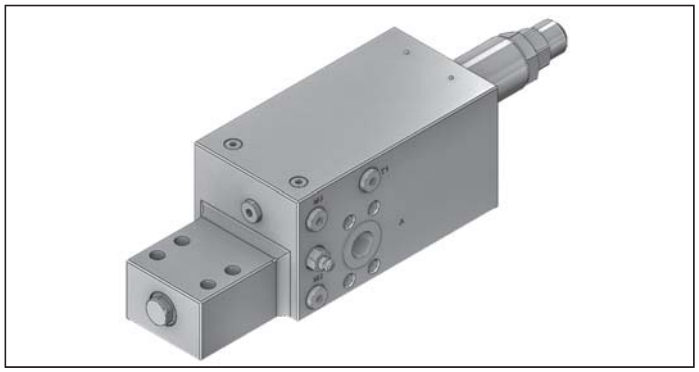

Description

Unrestricted upstream flow (A – A1) to the cylinder is possible through the check valve (3), while downstream flow (A1 – A ,or A1 – B) is locked by the leak free main spool (1) which is held closed by the spring and by the load induced pressure. With pilot pressure at X (joystick), the spool (1) is first vented to tank then it is remotely controlled and it slides to provide fine metering for the downstream flow; after the initial venting, the pilot pressure required to move the spool is load independent. The return flow (A1 – A) is slightly pressurized by the check valve (4) and is available to re-fill the opposite end of the cylinder through the check valve (5) and port (B), in order to prevent cavitation. The valve includes a small relief cartridge (2) which senses the A1 pressure (load induced) and opens under overload or shock conditions in order to pilot fully open the main spool (1): this allows any excess of pressure at A1 to be relieved downstream through A. For better safety and compact assembly, the A1 port is flanged (gasket mounted) directly on the actuator.

Technical data

Max. operating pressure	420 bar (6000 psi)
Max. flow	400 /min. (106 gpm)
Weight	26 kg (57.3 lbs)
Flange seal kit [1)]	E00000000000003 (R930004533)
Manifold material	Zinc plated steel
Fluid	Mineral oil (HL, HLP) according DIN 51524
Fluid temperature range	-30 °C to 100 (-22 to 212 °F)
Viscosity range	10 to 500 mm^2/s (cSt)
Recommended degree of fluid contamination	Class 19/17/14 according to ISO 4406
The Tank vented port must be connected to a “low pressure tank line” (to the joystick tank line, or to tank directly).	
The restricted “M” port must be connected to a “pressure equalizing line” in case of 2 valves fitted to 2 twin cylinders, and may be used as “outlet to tank” for emergency boom lowering in case of pilot pressure failure.	
This valve with specific adjustments, it can become part of load holding and load lowering systems designed to comply with ISO Standard 8643 (hose burst protection).	
Other technical data	see data sheet 18350-50

Note: for applications outside these parameters, please consult us.

[1)] Seals for 10 valves.

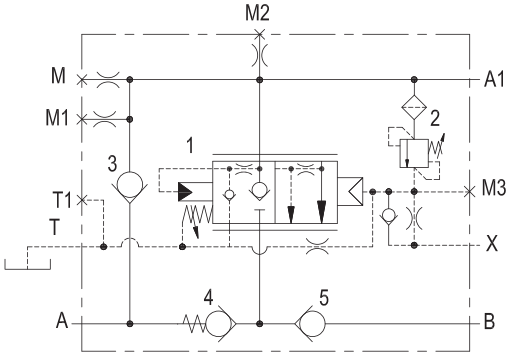

Characteristic curve

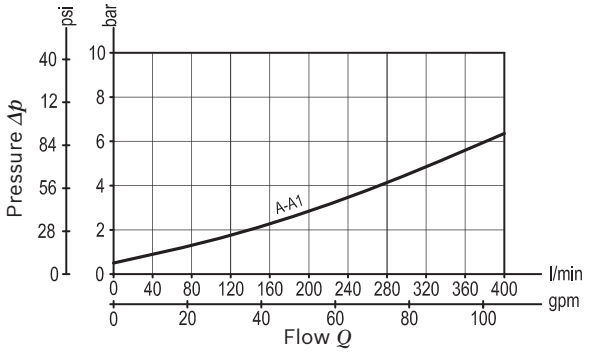

Dimensions [mm (inches)]

Ordering code

08.39.37	X	Y	Z

Check and metering valve flangeable

22	Spool type

Port sizes	A - A1	M-M1-M2-M3-T-T1-X	B
73	1 SAE 6000	G 1/4	3/4 SAE 6000

		SPRINGS		
		Adj. pressure range bar (psi)	Pres. increase bar/turn (psi/turn)	Std. setting bar (psi)
46	Valve 1			7.5 (109) “cracking”
	Valve 2	350-460 (5000-6700)	228 (3306)	350 (5000) “5 l/min”

Tamper resistant cap
ordering code 11.04.31.001
Mat. no. R930000777
for Valve 2

Preferred types

Type	Material number
083937227346000	R930007072

Type	Material number

Dimensions

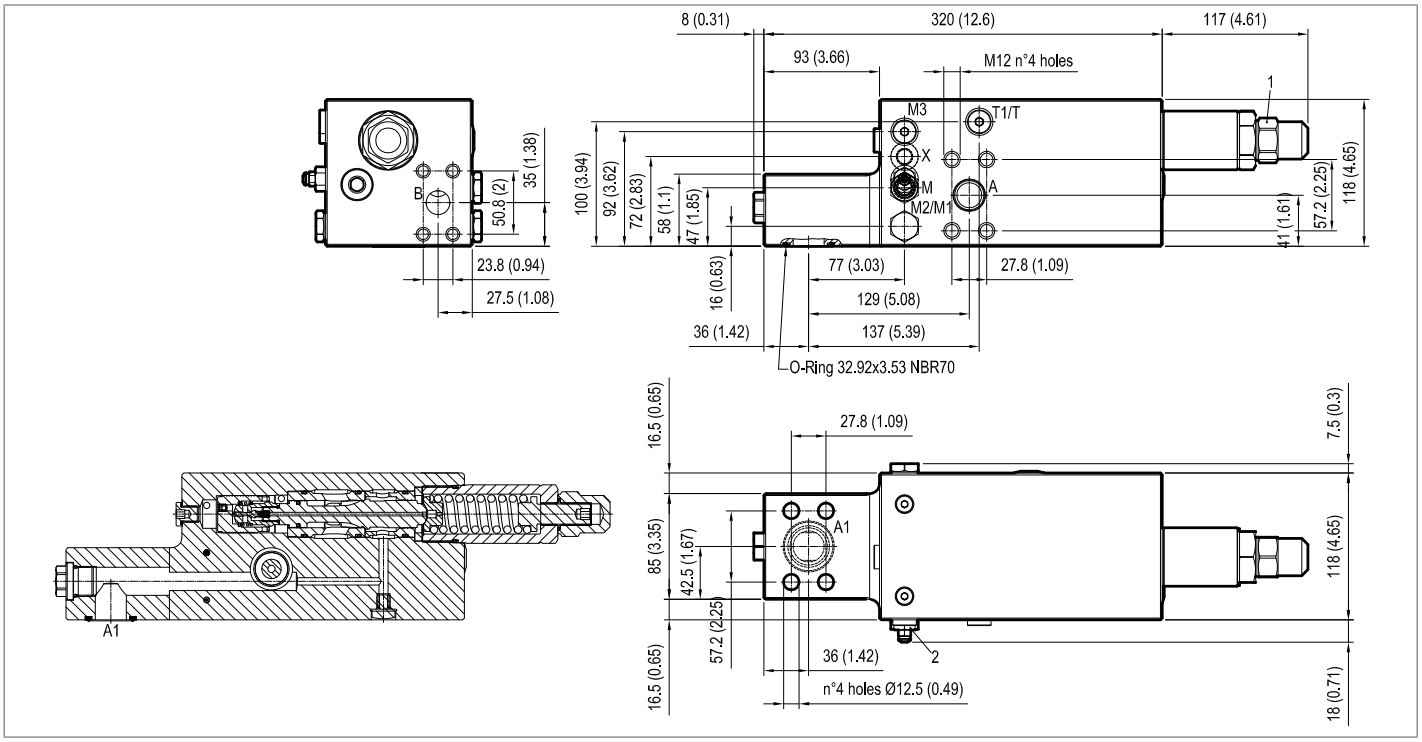

Control Plus check and metering valve flangeable

A-VBC14-FC2

08.39.90 - X - Y - Z

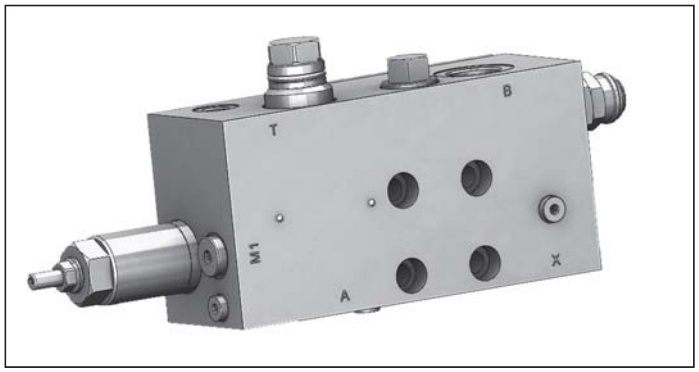

Technical data

Max. operating pressure	350 bar (5000 psi)
Max. flow	150 l/min. (40 gpm)
Weight	9.6 kg (21.2 lbs)
Manifold material	Zinc plated steel
Flange seal kit [1]	E00000000000035 (R930004539)
Fluid	Mineral oil (HL, HLP) according DIN 51524
Fluid temperature range	-30 °C to 100 (-22 to 212 °F)
Viscosity range	10 to 500 mm^2/s (cSt)
Recommended degree of fluid contamination	Class 19/17/14 according to ISO 4406
Other technical data	see data sheet 18350-50
Relief setting: at least 1.3 times the highest expected load.	
The tank vented port must be connected to a “low pressure tank line” (to the joystick tank line, or to tank directly).	

Note: for applications outside these parameters, please consult us.

[1] Seals for 10 valves.

Description

The flow (A – A1) to the cylinder for lifting the boom is free through the check valve and reverse flow (A1 – A) is locked / metered by a leak-free spool (1) which provides quick response and very fine control. The spool, normally held closed by an adjustable spring force, is remotely controlled by joystick pilot pressure at port X; the low pilot pressure required to move the spool is load independent because valve (1) is not sensitive to load pressure and the spring is vented to tank (T). The valve includes a joystick-actuated by-pass (3), open while lowering, which ensures that the cylinder rod side is always re-filled in order to avoid cavitation effects. As a result, it is possible to get maximum lowering speed also when the pump is idling (gravity lowering) and the boom and the forks are always ready to push further downwards also after boom touchdown. A cross-piloted counterbalance valve (2) controls the boom cylinder rod side and prevents inadvertent movements due to the pulling effect of the compensator cylinder (anti-kick function). For better safety and compact assembly, the A1 and B1 ports are gasket mounted directly on the cylinder.

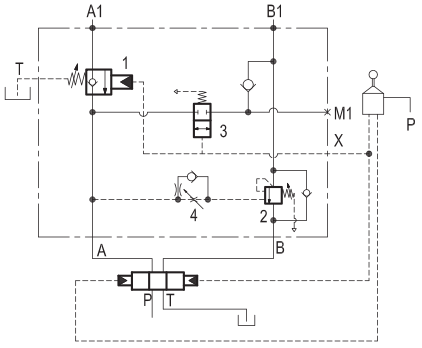

Characteristic curve

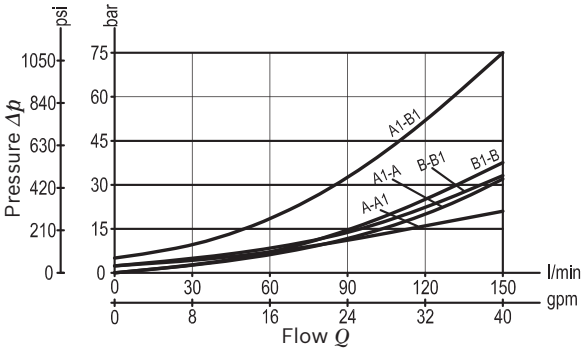

Dimensions [mm (inches)]

Ordering code

08.39.90	X	Y	Z

Control Plus check and metering valve flangeable

Pilot ratio

03 Valve 2 4:1

Port sizes	A - B	M1 - T - X	A1	B1
04	G 3/4	G 1/4	Ø 11 (0.43)	Ø 15 (0.59)

		SPRINGS		
		Adj. pressure range bar (psi)	Pres. increase bar/turn (psi/turn)	Std. setting bar (psi)
02	Valve 1	6-15 (87-220)	1.5 (22)	7.5 (109) “cracking”
	Valve 2	60-120 (870-1740)	46 (667)	80 (1160) “5 l/min”
	Valve 3	-	-	6 (87) “cracking”

Tamper resistant cap ordering code 11.04.23.002
Mat. no. R930000752
for Valve 1

Tamper resistant cap ordering code 11.04.30.001
Mat. no. R930005194
for Valve 2

Preferred types

Type	Material number
083990030402000	R930060604

Dimensions

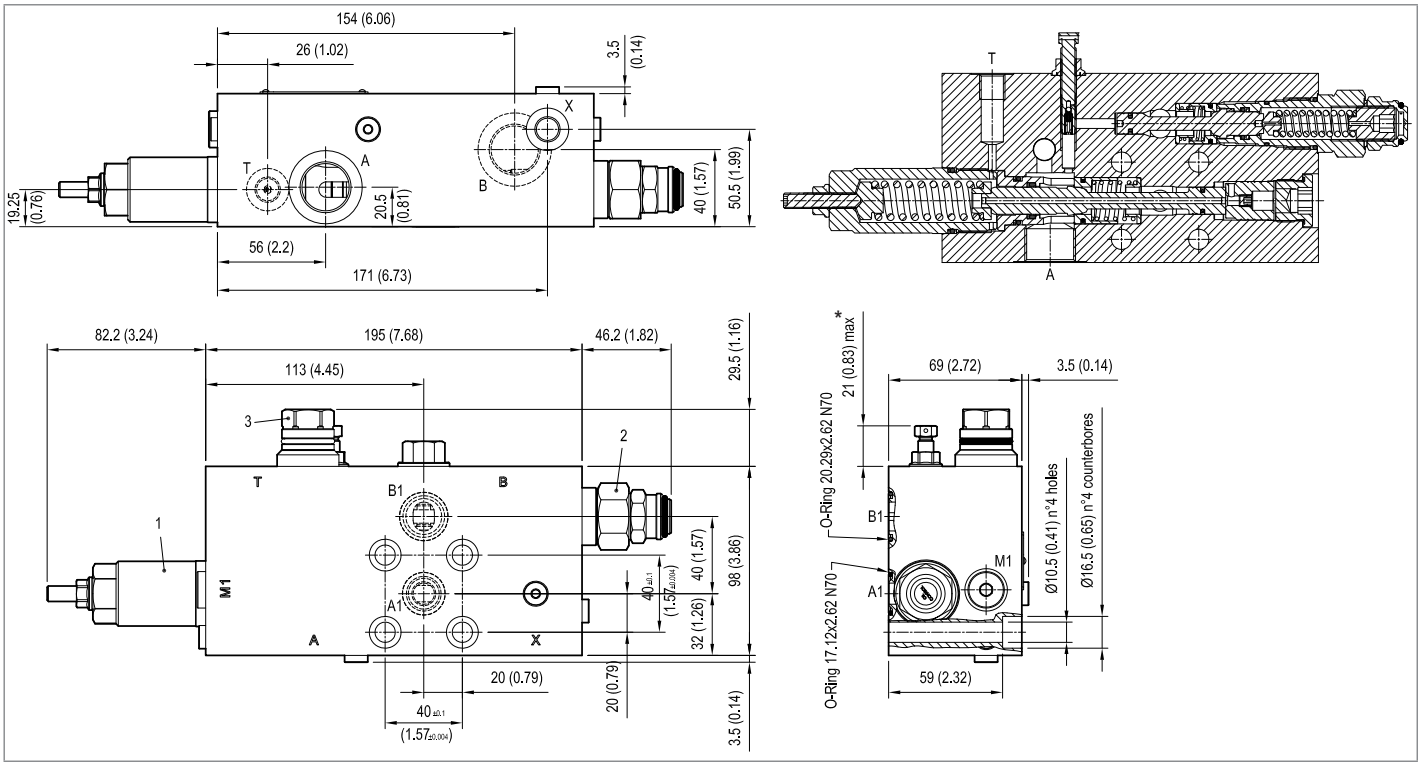

* The adjusting screw can be completely unscrewed. Do not exceed the indicated protrusion range of the adjusted screw.

Load holding/motion control
Flow regulators

Designation	Description	Ports	Code	Data sheet	Page
Flow regulator, 2-way pressure compensated	VRFC2	G 3/8	0M2203X97	18309-32	325
Flow regulator, 2-way pressure compensated	VRFC2	G 3/8, G 1/2, G 3/4, G1	0M2203XY	18309-33	327
Flow regulator, 2-way pressure compensated	VRFC2-L	G 3/8, G 1/2, G 3/4	0M220350Y	18309-34	329
Flow regulator, 2-way pressure compensated	A-VRFC2	G 3/8, G 1/2, G 3/4, G1	0MB203XY	18309-35	331
Flow regulator, 2-way pressure compensated with check valve for free reverse flow	VRFC2-VU	G 3/8, G 1/2, G 3/4, G1	0M2403XY	18309-36	333
Flow regulator, 3-way pressure compensated	VRFC3	G 3/8	0M3203X97	18309-37	335
Flow regulator, 3-way pressure compensated	VRFC3	G 3/8, G 1/2, G 3/4	0M3203XY	18309-38	337
Flow regulator, 3-way pressure compensated	VRFC3	G 1	0M3203X05	18309-39	339
Flow regulator, 3-way pressure compensated	VRFC3-L	G 3/8, G 1/2, G 3/4	0M320350Y	18309-40	341
Flow regulator, 3-way pressure compensated	A-VRFC3	G 1/2, G 3/4	0MC203XY	18309-41	343
Flow regulator, 3-way pressure compensated	A-VRFC3	G 1	0MC203X05	18309-42	345
Flow regulator, 3-way pressure compensated with check valve for free reverse flow	VRFC3-VU	G 3/8, G 1/2	0M3903XY	18309-43	347
Flow regulator, 3-way pressure compensated with check valve for free reverse flow	VRFC3-VU	G 3/4	0M3903X04	18309-44	349
Flow regulator, 3-way pressure compensated with relief	VRFC3-VS	G 3/8, G 1/2, G 3/4, G1	0M3303XY	18309-45	351
Flow regulator, 3-way pressure compensated with relief	VRFC3-VS	G 3/8, G 1/2, G 3/4	0M330350Y	18309-46	353
Flow regulator, 3-way pressure compensated with relief and solenoid control	VRFC3-VS-VEI	G 1/2, G 3/4, G1	0M3603XY	18309-47	355
Flow regulator, 3-way pressure compensated with relief and solenoid by-pass	VRFC3-VS-BPE	G 3/8, G 1/2	0M3803XY	18309-48	357

Load holding/motion control
Flow regulators

Designation	Description	Ports	Code	Data sheet	Page
Flow regulator, 3-way pressure compensated with relief and solenoid by-pass	VRFC3-VS-BPE	G 3/4	0M3803X04	18309-49	359
Flow regulator, 3-way, combination type, pressure compensated	VRFC3C	G 3/8, G 1/2, G 3/4, G1	0M4203XY	18309-50	361
Flow regulator, 3-way, combination type, pressure compensated	A-VRFC3C	G 3/4, G1	0MD203XY	18309-51	363
Flow regulator, 3-way, combination type, pressure compensated	VRFC3C	G 3/8, G 1/2, G 3/4	0M420350Y	18309-52	365
Flow regulator, 3-way heavy duty flow control, with pressure compensated and solenoid controlled priority flow	A-VRFC3C-VEI-VS	G 1/2, G 3/4, G1, G 1-1/4	0M432080YZ	18309-53	367
Flow regulator, 5-way heavy duty flow control, with pressure compensated and solenoid controlled priority flow, for two pumps systems	A-VRFC3C-VEI-VS	G 1/2, G 3/4, G1	0M431280YZ	18309-54	373
Flow regulator, 3-way heavy duty flow control, with pressure compensated, solenoid and load sensing controlled priority flow	A-VRFC3C-VEI-VS-LS	1-1/16 12 UN 2B	0M432180YZ	18309-63	379
Flow regulator, 2-way heavy duty flow control, with pressure compensated, solenoid and load sensing controlled priority flow	A-VRFC2-VEI-VS-LS	1-1/16 12 UN 2B	0M280380YZ	18309-64	385
Flow divider, combiner	DRF	G 3/8	0M51039002Z	18309-55	391
Flow divider, combiner	DRF	G 3/8, G 1/2	0M51039003Z	18309-56	393
Flow divider, combiner	DRF	G 3/4, G 1/2	0M51039004Z	18309-57	395
Flow divider, combiner	DRF	G 3/4, G1	0M51039005Z	18309-58	397
Flow divider, combiner	A-DRF	G 3/8	0ME1219002Z	18309-59	399
Flow divider, combiner	A-DRF	G 3/8, G 1/2	0ME1219003Z	18309-60	401
Flow divider, combiner	A-DRF	G 3/4, G 1/2	0ME1039004Z	18309-61	403
Flow divider, combiner	A-DRF	G 3/4, G1	0ME1039005Z	18309-62	405

Flow regulator
2 way, pressure compensated

VRFC2

0M.22.03 - X - 97

Description

A constant flow rate, regardless of system pressures, is established from E to R, while a minimum pressure differential of approximately 5 bar (70 psi) exists between the two ports. Output flow can be varied from zero (closed) to the nominal maximum rating. Reverse flow from R to E is limited by the selected opening of the restrictor and is not pressure compensated.

Technical data

Operating pressure	up to 210 bar (3000 psi)
Q= max. inlet flow “E” port 20 l/min. (5 gpm)	
Flow range adjustment	0 - 3 turns
Weight	0.5 kg (1.1 lbs)
Manifold material	A luminium
Note: aluminium bodies are often strong enough for operating pressures exceeding 210 bar (3000 psi), depending from the fatigue life expected in the specific application. If in doubt, consult our Service Network.	
Fluid	Mineral oil (HL, HLP) according DIN 51524
Fluid temperature range	-30 °C to 100 (-22 to 212 °F)
Viscosity range	5 to 800 mm^2/s (cSt)
Recommended degree of fluid contamination	Class 19/17/14 according to ISO 4406
Other technical data	see data sheet 18350-50

Note: for applications outside these parameters, please consult us.

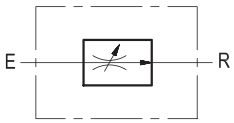

Characteristic curve

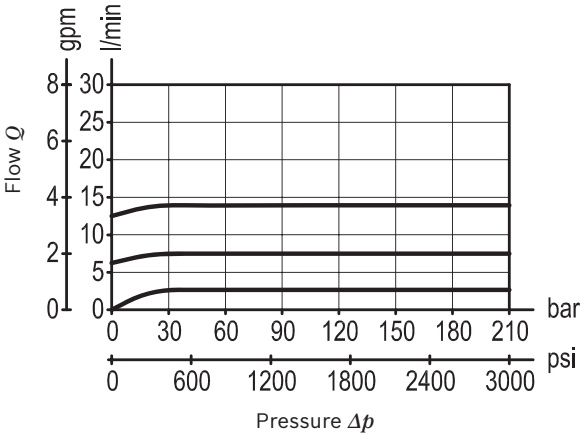

Dimensions [mm (inches)]

Ordering code

0M.22.03	X	97

Flow regulator
2 way, pressure compensated

Adjustments

70	Handknob and locknut	
80	Screw and locknut	
40	Graduated handknob	

Port sizes	E - R
	G 3/8

Preferred types

Type	Material number
0M220370970000A	R930004189
0M2203809700000	R930004195
0M2203409700000	R930000223

Type	Material number

Dimensions

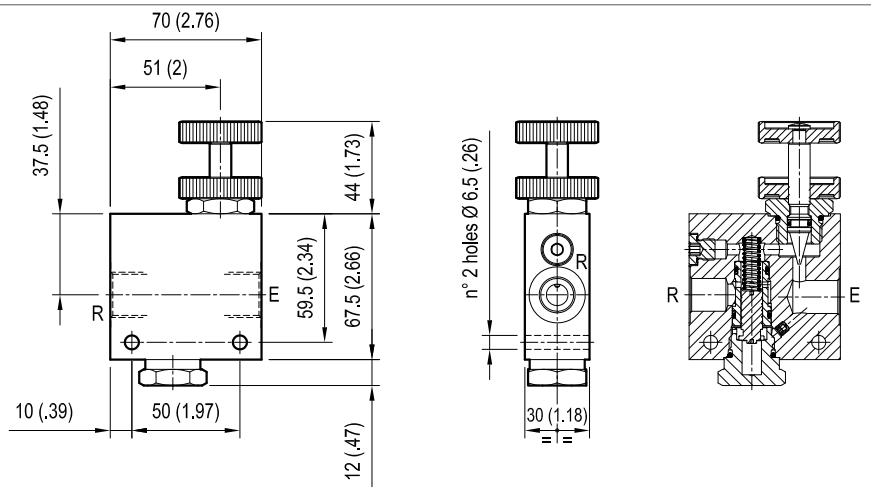

Flow regulator
2 way, pressure compensated

VRFC2 0M.22.03 - X - Y

Description

A constant flow rate, regardless of system pressures, is established from E to R, while a minimum pressure differential of approximately 5 bar (70 psi) exists between the two ports. Output flow can be varied from zero (closed) to the nominal maximum rating. Reverse flow from R to E is limited by the selected opening of the restrictor and is not pressure compensated.

Technical data

Operating pressure	up to 210 bar (3000 psi)
Q= max. inlet flow “E” port (see “Dimensions”)	
Flow range adjustment	0 - 3 turns
Weight	see “Dimensions”
Manifold material	Aluminium
Note: aluminium bodies are often strong enough for operating pressures exceeding 210 bar (3000 psi), depending from the fatigue life expected in the specific application. If in doubt, consult our Service Network.	
Fluid	Mineral oil (HL, HLP) according DIN 51524
Fluid temperature range	-30 °C to 100 (-22 to 212 °F)
Viscosity range	5 to 800 mm^2/s (cSt)
Recommended degree of fluid contamination	Class 19/17/14 according to ISO 4406
Other technical data	see data sheet 18350-50

Note: for applications outside these parameters, please consult us.

Characteristic curve

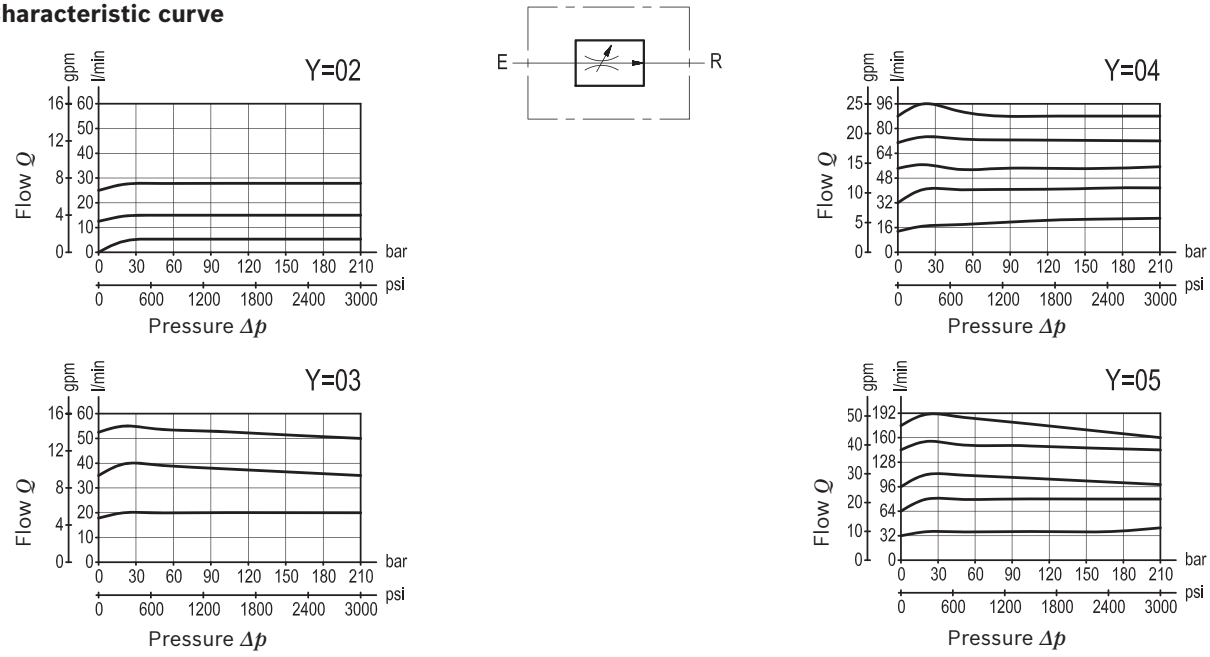

Dimensions [mm (inches)]

Ordering code

0M.22.03	X	Y

Flow regulator,
2 way, pressure compensated

Adjustments		
70	Handknob and locknut	
80	Screw and locknut	
40	Graduated handknob	

Port sizes	E - R
02	G 3/8
03	G 1/2
04	G 3/4
05	G 1

Preferred types

Type	Material number
0M2203700200000	R930004181
0M2203700300000	R930004182
0M2203700400000	R930004183
0M2203700500000	R930004184
0M2203800200000	R930004190
0M2203800300000	R930004192

Type	Material number
0M2203800400000	R930004193
0M2203800500000	R930004194
0M2203400200000	R930004169
0M2203400300000	R930004170
0M2203400400000	R930004171
0M2203400500000	R930004172

Dimensions

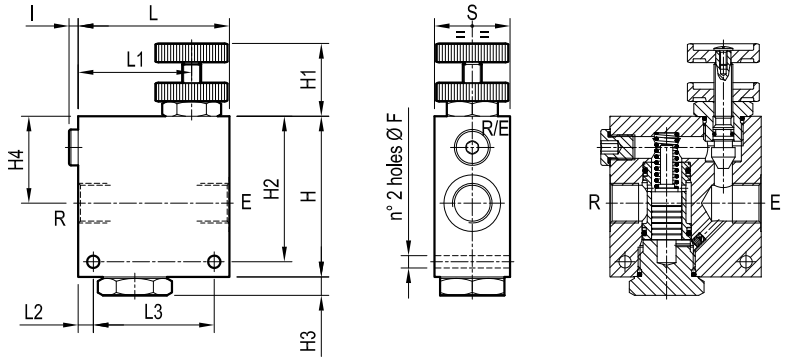

50 (1.97)	82 (3.23)	8 (0.32)	78 (3.07)	108 (4.25)	5 (0.2)	62 (2.44)	10 (0.39)	98 (3.86)	40 (1.58)	108 (4.25)	8.5 (0.34)			190 l/min 50 gpm	G 1	1.94 (4.28)
50 (1.97)	82 (3.23)	8 (0.32)	75 (2.95)	100 (3.94)	5 (0.2)	56 (2.21)	10 (0.39)	90 (3.54)	40 (1.58)	100 (3.94)	8.5 (0.34)			90 l/min 24 gpm	G 3/4	1.65 (3.64)
40 (1.58)	64 (2.52)	8 (0.32)	60 (2.36)	80 (3.15)	5 (0.2)	46 (1.81)	10 (0.39)	77 (3.03)	40 (1.58)	85 (3.35)	6.5 (0.26)			55 l/min 15 gpm	G 1/2	0.88 (1.94)
40 (1.58)	64 (2.52)	8 (0.32)	60 (2.36)	80 (3.15)	5 (0.2)	46 (1.81)	10 (0.39)	77 (3.03)	40 (1.58)	85 (3.35)	6.5 (0.26)			30 l/min 8 gpm	G 3/8	0.88 (1.94)
S	L3	L2	L1	L	I	H4	H3	H2	H1	H	F			Q	Y	Weight kg (lbs)

Flow regulator
2 way, pressure compensated

VRFC2-L

0M.22.03.50 - Y

Description

A constant flow rate, regardless of system pressures, is established from E to R, while a minimum pressure differential of approximately 5 bar (70 psi) exists between the two ports. Output flow can be varied from zero (Closed) to the nominal maximum rating (Open). Reverse flow from R to E is limited by the selected opening of the lever controlled restrictor and is not pressure compensated.

Technical data

Operating pressure	up to 210 bar (3000 psi)
Q= max. inlet flow “E” port (see “Dimensions”)	
Flow control range: from 15° to 165° of hand lever rotation	
Weight	see “Dimensions”
Manifold material	Aluminium
Note: aluminium bodies are often strong enough for operating pressures exceeding 210 bar (3000 psi), depending from the fatigue life expected in the specific application. If in doubt, consult our Service Network.	
Fluid	Mineral oil (HL, HLP) according DIN 51524
Fluid temperature range	-30 °C to 100 (-22 to 212 °F)
Viscosity range	5 to 800 mm²/s (cSt)
Recommended degree of fluid contamination	Class 19/17/14 according to ISO 4406
Other technical data	see data sheet 18350-50

Note: for applications outside these parameters, please consult us.

Characteristic curve

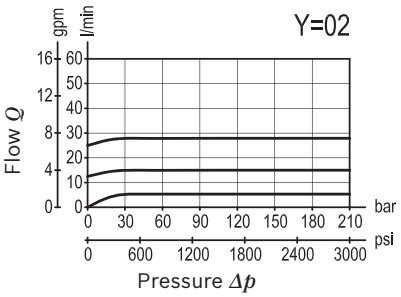

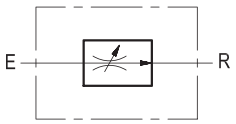

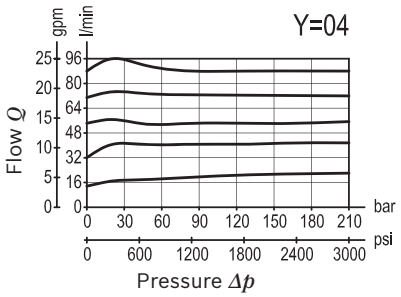

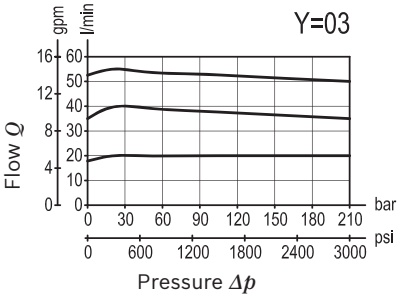

Dimensions [mm (inches)]

Ordering code

0M.22.03	50	Y

Flow regulator
2 way, pressure compensated

Adjustments

Lever with built in friction clutch

Port sizes	E - R
02	G 3/8
03	G 1/2
04	G 3/4

Preferred types

Type	Material number
0M2203500200000	R930004174
0M2203500300000	R930004175
0M2203500400000	R930004176

Type	Material number

Dimensions

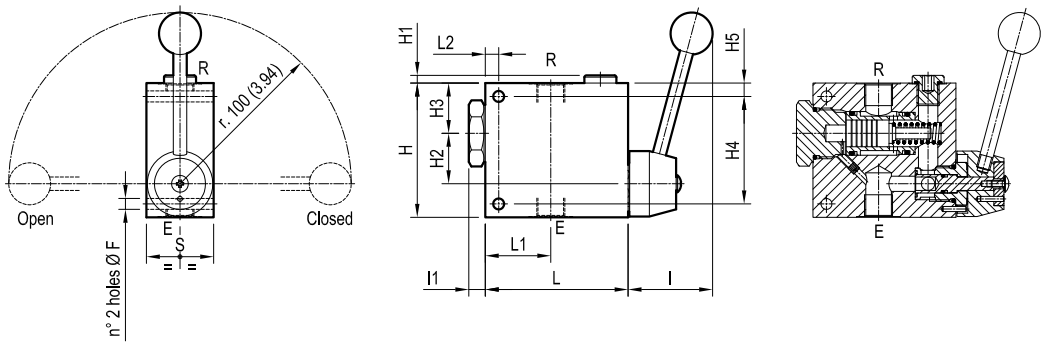

50 (1.97)	10 (0.39)	44 (1.73)	100 (3.94)	10 (0.39)	50 (1.97)	8 (0.32)	82 (3.23)	35 (1.38)	40 (1.58)	4.5 (0.18)	100 (3.94)	8.5 (0.34)	90 l/min 24 gpm	G 3/4	1.75 (3.86)
40 (1.58)	8 (0.32)	39 (1.54)	85 (3.35)	10 (0.39)	50 (1.97)	8 (0.32)	64 (2.52)	30 (1.18)	30 (1.18)	4.5 (0.18)	80 (3.15)	6.5 (0.26)	55 l/min 15 gpm	G 1/2	0.97 (2.14)
40 (1.58)	8 (0.32)	39 (1.54)	85 (3.35)	10 (0.39)	50 (1.97)	8 (0.32)	64 (2.52)	30 (1.18)	30 (1.18)	4.5 (0.18)	80 (3.15)	6.5 (0.26)	30 l/min 8 gpm	G 3/8	0.97 (2.14)
S	L2	L1	L	l1	l	H5	H4	H3	H2	H1	H	F	Q	Y	Weight kg (lbs)

Flow regulator
2 way, pressure compensated

A-VRFC2

0M.B2.03 - X - Y

Description

A constant flow rate, regardless of system pressures, is established from E to R, while a minimum pressure differential of approximately 5 bar (70 psi) exists between the two ports. Output flow can be varied from zero (closed) to the nominal maximum rating. Reverse flow from R to E is limited by the selected opening of the restrictor and is not pressure compensated.

Technical data

Max. operating pressure	350 bar (5000 psi)
Q= max. inlet flow “E” port (see “Dimensions”)	
Flow range adjustment	0 - 3 turns
Weight	see “Dimensions”
Manifold material	Zinc plated steel
Fluid	Mineral oil (HL, HLP) according DIN 51524
Fluid temperature range	-30 °C to 100 (-22 to 212 °F)
Viscosity range	5 to 800 mm^2/s (cSt)
Recommended degree of fluid contamination	Class 19/17/14 according to ISO 4406
Other technical data	see data sheet 18350-50

Note: for applications outside these parameters, please consult us.

Characteristic curve

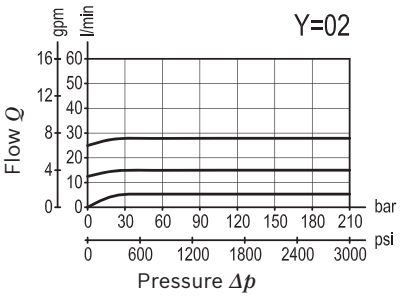

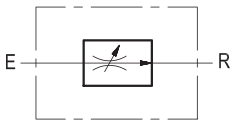

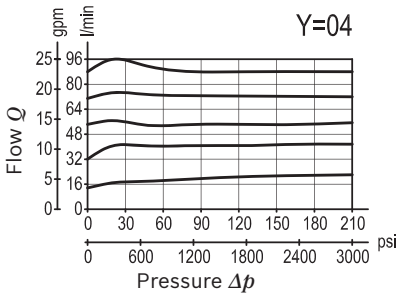

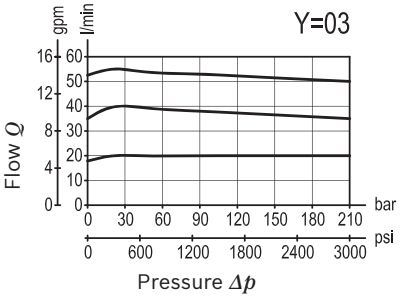

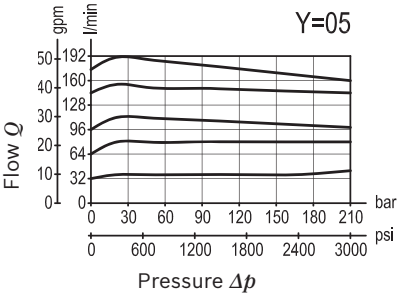

Dimensions [mm (inches)]

Ordering code

0M.B2.03	X	Y

Flow regulator,
2 way, pressure compensated

Adjustments		
70	Handknob and locknut	
80	Screw and locknut	
40	Graduated handknob	

Port sizes	E - R
02	G 3/8
03	G 1/2
04	G 3/4
05	G 1

Preferred types

Type	Material number
0MB203700200000	R930004469
0MB203700300000	R930004470
0MB203700400000	R930004471
0MB203700500000	R930004472
0MB203800200000	R930000225
0MB203800300000	R930000234

Type	Material number
0MB203800400000	R930000241
0MB203800500000	R930000250
0MB203400200000	R930000228
0MB203400300000	R930000229
0MB203400400000	R930000238
0MB203400500000	R930000254

Dimensions

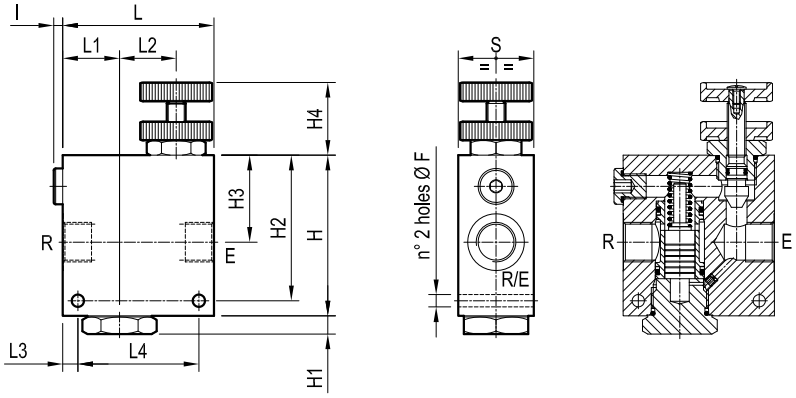

50 (1.97)	82 (3.23)	8 (0.32)	38 (1.5)	40 (1.58)	108 (4.25)	5 (0.2)	40 (1.58)	62 (2.44)	98 (3.86)	10 (0.39)	100 (3.94)	8.5 (0.34)	190 l/min 50 gpm	G 1	4.3 (9.5)
50 (1.97)	82 (3.23)	8 (0.32)	40 (1.58)	35 (1.38)	100 (3.94)	5 (0.2)	40 (1.58)	56 (2.21)	90 (3.54)	10 (0.39)	100 (3.94)	8.5 (0.34)	90 l/min 24 gpm	G 3/4	3.5 (7.7)
40 (1.58)	64 (2.52)	8 (0.32)	30 (1.18)	30 (1.18)	80 (3.15)	5 (0.2)	40 (1.58)	46 (1.81)	77 (3.03)	10 (0.39)	85 (3.35)	6.5 (0.26)	55 l/min 15 gpm	G 1/2	1.9 (4.19)
40 (1.58)	64 (2.52)	8 (0.32)	30 (1.18)	30 (1.18)	80 (3.15)	5 (0.2)	40 (1.58)	46 (1.81)	77 (3.03)	10 (0.39)	85 (3.35)	6.5 (0.26)	30 l/min 8 gpm	G 3/8	1.9 (4.19)
S	L4	L3	L2	L1	L	I	H4	H3	H2	H1	H	F	Q	Y	Weight kg (lbs)

Flow regulator
2 way, pressure compensated
with check valve for free reverse flow

VRFC2-VU 0M.24.03 - X - Y

Description

A constant flow rate, regardless of system pressures, is established from E to R, while a minimum pressure differential of approximately 5 bar (70 psi) exists between the two ports. Output flow can be varied from zero (closed) to the nominal maximum rating. Free flow is permitted from R to E, regardless of valve adjustment, when pressure overcomes the spring bias of the check valve.

Technical data

Operating pressure	up to 210 bar (3000 psi)
Q= max. inlet flow “E” port (see “Dimensions”)	
Flow range adjustment	0 - 3 turns
Weight	see “Dimensions”
Manifold material	Aluminium
Note: aluminium bodies are often strong enough for operating pressures exceeding 210 bar (3000 psi), depending from the fatigue life expected in the specific application. If in doubt, consult our Service Network.	
Fluid	Mineral oil (HL, HLP) according DIN 51524
Fluid temperature range	-30 °C to 100 (-22 to 212 °F)
Viscosity range	5 to 800 mm^2/s (cSt)
Recommended degree of fluid contamination	Class 19/17/14 according to ISO 4406
Other technical data	see data sheet 18350-50

Note: for applications outside these parameters, please consult us.

Characteristic curve

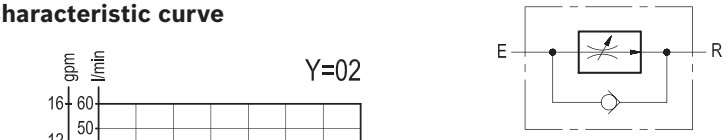

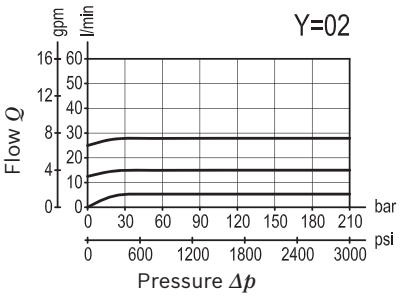

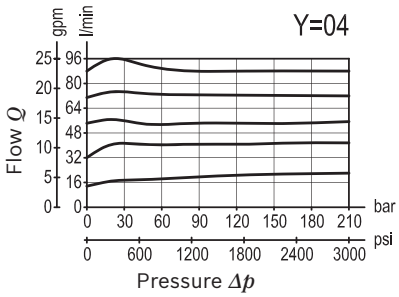

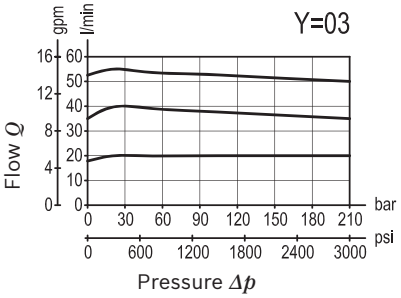

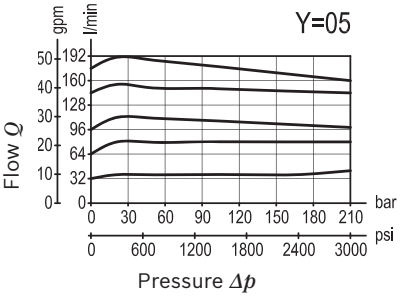

Dimensions [mm (inches)]

Ordering code

0M.24.03	X	Y

Flow regulator
2 way, pressure compensated
with check valve for free reverse flow

Adjustments		
70	Handknob and locknut	
80	Screw and locknut	
40	Graduated handknob	

Port sizes	E - R
02	G 3/8
03	G 1/2
04	G 3/4
05	G 1

Preferred types

Type	Material number
0M2403700200000	R930004201
0M2403700300000	R930004202
0M2403700400000	R930004203
0M2403700500000	R930004204
0M2403800200000	R930000267
0M2403800300000	R930004205

Type	Material number
0M2403800400000	R930000221
0M2403800500000	R930000256
0M2403400200000	R930004200
0M2403400300000	R930000524
0M2403400400000	R930000525
0M2403400500000	R930000274

Dimensions

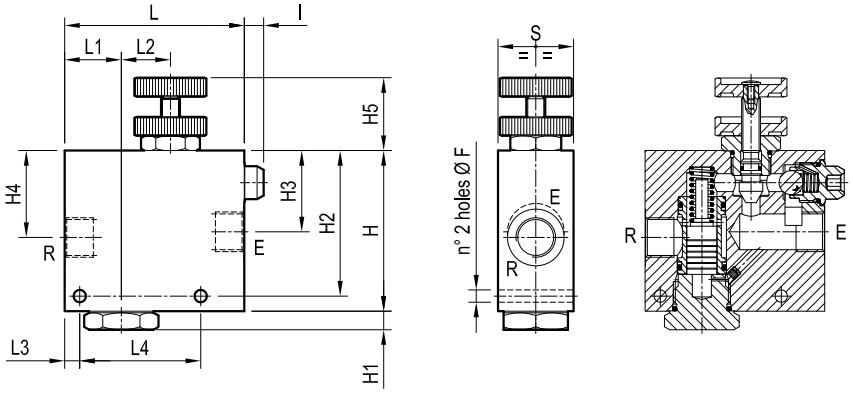

50 (1.97)	82 (3.23)	8 (0.32)	40 (1.58)	40 (1.58)	145 (5.71)	13 (0.51)	40 (1.58)	64 (2.52)	66 (2.6)	100 (3.94)	10 (0.39)	110 (4.33)	8.5 (0.34)	190 l/min 50 gpm	G 1	3.1 (6.8)
50 (1.97)	82 (3.23)	8 (0.32)	40 (1.58)	35 (1.38)	130 (5.12)	13 (0.51)	40 (1.58)	56 (2.21)	54 (2.13)	90 (3.54)	10 (0.39)	100 (3.94)	8.5 (0.34)	90 l/min 24 gpm	G 3/4	2.1 (4.6)
40 (1.58)	64 (2.52)	8 (0.32)	26 (1.02)	30 (1.18)	95 (3.74)	10 (0.39)	40 (1.58)	46 (1.81)	42 (1.65)	77 (3.03)	10 (0.39)	85 (3.35)	6.5 (0.26)	55 l/min 15 gpm	G 1/2	1.04 (2.3)
40 (1.58)	64 (2.52)	8 (0.32)	26 (1.02)	30 (1.18)	95 (3.74)	10 (0.39)	40 (1.58)	46 (1.81)	41.5 (1.63)	77 (3.03)	10 (0.39)	85 (3.35)	6.5 (0.26)	30 l/min 8 gpm	G 3/8	1.04 (2.3)
S	L4	L3	L2	L1	L	l	H5	H4	H3	H2	H1	H	F	Q	Y	Weight kg (lbs)

Flow regulator
3 way, pressure compensated

VRFC3

0M.32.03 - X - 97

Description

A constant flow rate, regardless of system pressures, is established from E to R, while a minimum pressure differential of appr. 5 bar (70 psi) exists between the two ports. Input flow supplied to E in excess of the regulated output at R is by-passed to T. Output flow can be varied from closed to the nominal maximum rating for the valve. Reverse flow from R to E is limited by the selected opening of the restrictor and is not pressure compensated. Flow from T to E or from T to R is not possible. Increasing or decreasing inlet flow may cause slight increase or decrease of Regulated flow.

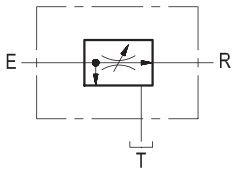

Technical data

Operating pressure	up to 210 bar (3000 psi)
QE= max. inlet flow “E” port 40 l/min. (11 gpm)	
QR= max. regulated flow “R” port 25 l/min. (7 gpm)	
Flow range adjustment	0 - 3 turns
Weight	0.55 kg (1.21 lbs)
Manifold material	Aluminium
Note: aluminium bodies are often strong enough for operating pressures exceeding 210 bar (3000 psi), depending from the fatigue life expected in the specific application. If in doubt, consult our Service Network.	
Fluid	Mineral oil (HL, HLP) according DIN 51524
Fluid temperature range	-30 °C to 100 (-22 to 212 °F)
Viscosity range	5 to 800 mm^2/s (cSt)
Recommended degree of fluid contamination	Class 19/17/14 according to ISO 4406
Other technical data	see data sheet 18350-50

Note: for applications outside these parameters, please consult us.

Characteristic curve

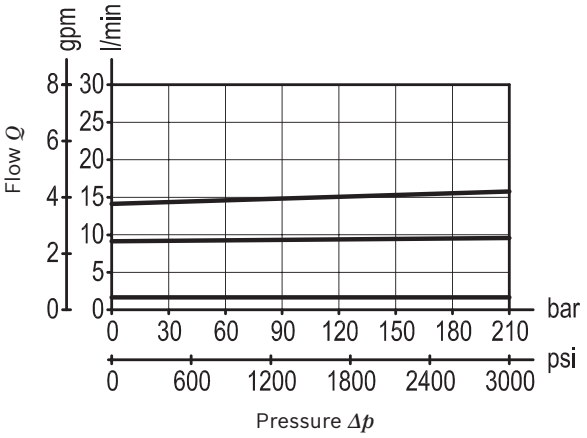

RE 18300-37/03 2010 Bosch Rexroth Oil Control S.p.A.

Dimensions [mm (inches)]

Ordering code

0M.32.03	X	97

Flow regulator,
3 way, pressure compensated

Adjustments

70	Handknob and locknut	
80	Screw and locknut	
40	Graduated handknob	

Port sizes

E - R - T
G 3/8

Preferred types

Type	Material number
0M3203709700000	R930004239
0M3203809700000	R930004246
0M3203409700000	R930004226

Type	Material number

Dimensions

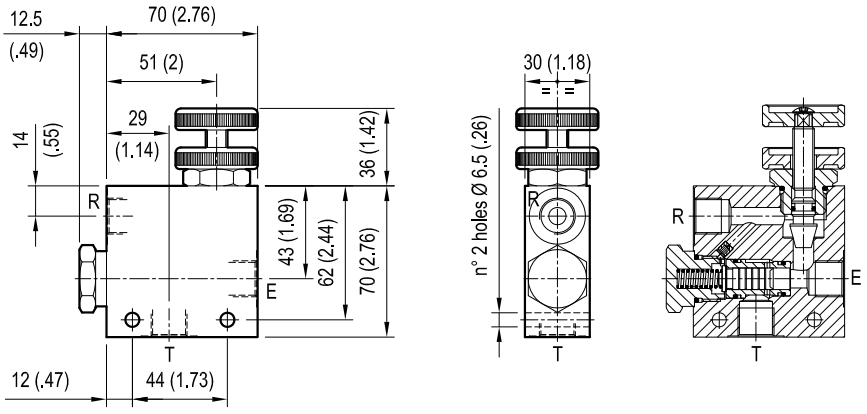

Flow regulator
3 way, pressure compensated

VRFC3 0M.32.03 - X - Y

Description

A constant flow rate, regardless of system pressures, is established from E to R, while a minimum pressure differential of appr. 5 bar (70 psi) exists between the two ports. Input flow supplied to E in excess of the regulated output at R is by-passed to T. Output flow can be varied from closed to the nominal maximum rating for the valve. Reverse flow from R to E is limited by the selected opening of the restrictor and is not pressure compensated. Flow from T to E or from T to R is not possible. Increasing or decreasing inlet flow may cause slight increase or decrease of Regulated flow.

Technical data

Operating pressure	up to 210 bar (3000 psi)
QE= max. inlet flow “E” port (see “Dimensions”)	
QR= max. regulated flow “R” port (see “Dimensions”)	
Flow range adjustment	0 - 3 turns
Weight	see “Dimensions”
Manifold material	Aluminium
Note: aluminium bodies are often strong enough for operating pressures exceeding 210 bar (3000 psi), depending from the fatigue life expected in the specific application. If in doubt, consult our Service Network.	
Fluid	Mineral oil (HL, HLP) according DIN 51524
Fluid temperature range	-30 °C to 100 (-22 to 212 °F)
Viscosity range	5 to 800 mm^2/s (cSt)
Recommended degree of fluid contamination	Class 19/17/14 according to ISO 4406
Other technical data	see data sheet 18350-50

Note: for applications outside these parameters, please consult us.

Characteristic curve

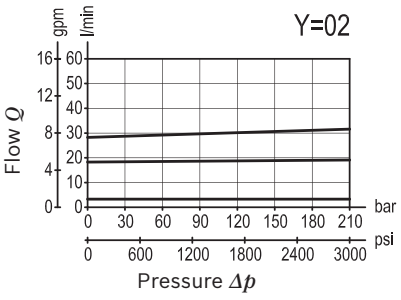

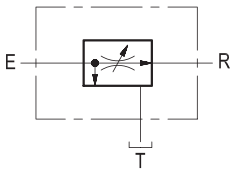

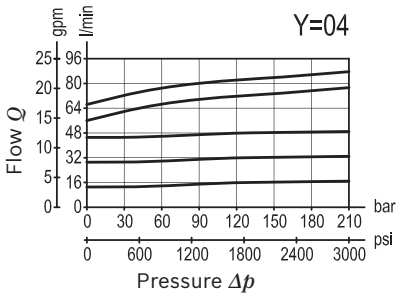

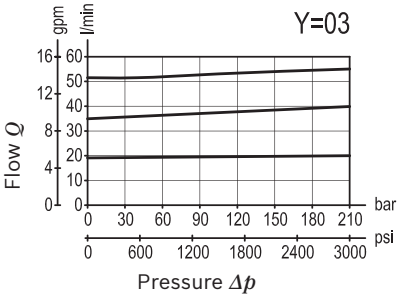

Dimensions [mm (inches)]

Ordering code

0M.32.03	X	Y

Flow regulator
3 way, pressure compensated

Adjustments

70	Handknob and locknut	
80	Screw and locknut	
40	Graduated handknob	

Port sizes	E - R - T
02	G 3/8
03	G 1/2
04	G 3/4

Preferred types

Type	Material number
0M3203700200000	R930004231
0M320370030000A	R930004232
0M3203700400000	R930004233
0M3203800200000	R930004241
0M320380030000A	R930004242
0M3203800400000	R930004244

Type	Material number
0M3203400200000	R930004220
0M320340030000A	R930004221
0M3203400400000	R930004224

Dimensions

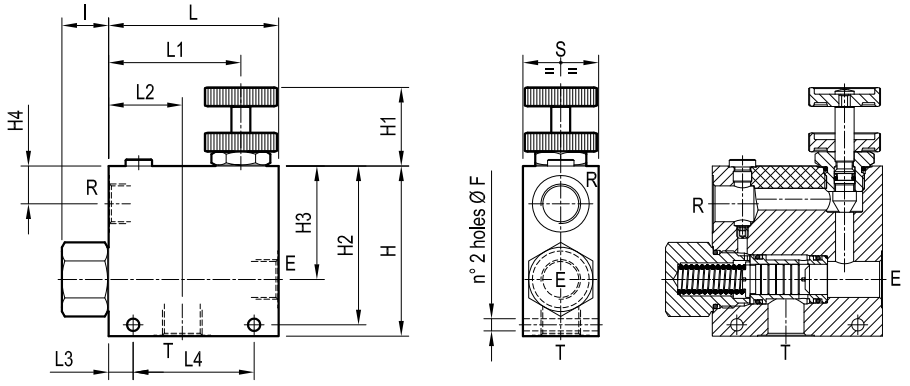

50 (1.97)	88 (3.47)	10 (0.39)	44 (1.73)	79 (3.11)	108 (4.25)	25 (0.98)	23 (0.91)	73 (2.87)	101 (3.98)	40 (1.58)	108 (4.25)	8.5 (0.34)	90 l/min 24 gpm	150 l/min 40 gpm	G 3/4	1.95 (4.3)
40 (1.58)	64 (2.52)	13 (0.51)	39 (1.54)	70 (2.76)	90 (3.54)	25 (0.98)	17.5 (0.69)	60 (2.36)	84 (3.31)	40 (1.58)	90 (3.54)	6.5 (0.26)	55 l/min 15 gpm	90 l/min 24 gpm	G 1/2	1.06 (2.34)
40 (1.58)	64 (2.52)	13 (0.51)	39 (1.54)	70 (2.76)	90 (3.54)	25 (0.98)	17.5 (0.69)	60 (2.36)	84 (3.31)	40 (1.58)	90 (3.54)	6.5 (0.26)	30 l/min 8 gpm	55 l/min 15 gpm	G 3/8	1.06 (2.34)
S	L4	L3	L2	L1	L	I	H4	H3	H2	H1	H	F	QR	QE	Y	Weight kg (lbs)

Flow regulator
3 way, pressure compensated

VRFC3

0M.32.03 - X - 05

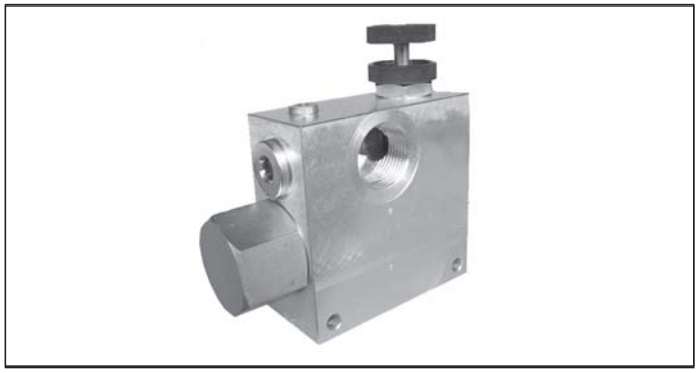

Description

A constant flow rate, regardless of system pressures, is established from E to R, while a minimum pressure differential of appr. 5 bar (70 psi) exists between the two ports. Input flow supplied to E in excess of the regulated output at R is by-passed to T. Output flow can be varied from closed to the nominal maximum rating for the valve. Reverse flow from R to E is limited by the selected opening of the restrictor and is not pressure compensated. Flow from T to E or from T to R is not possible. Increasing or decreasing inlet flow may cause slight increase or decrease of Regulated flow.

Technical data

Operating pressure	up to 210 bar (3000 psi)
QE= max. inlet flow “E” port 280 l/min. (74 gpm)	
QR= max. regulated flow “R” port 190 l/min. (50 gpm)	
Flow range adjustment	0 - 3 turns
Weight	1.95 kg (4.3 lbs)
Manifold material	Aluminium
Note: aluminium bodies are often strong enough for operating pressures exceeding 210 bar (3000 psi), depending from the fatigue life expected in the specific application. If in doubt, consult our Service Network.	
Fluid	Mineral oil (HL, HLP) according DIN 51524
Fluid temperature range	-30 °C to 100 (-22 to 212 °F)
Viscosity range	5 to 800 mm^2/s (cSt)
Recommended degree of fluid contamination	Class 19/17/14 according to ISO 4406
Other technical data	see data sheet 18350-50

Note: for applications outside these parameters, please consult us.

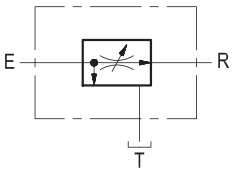

Characteristic curve

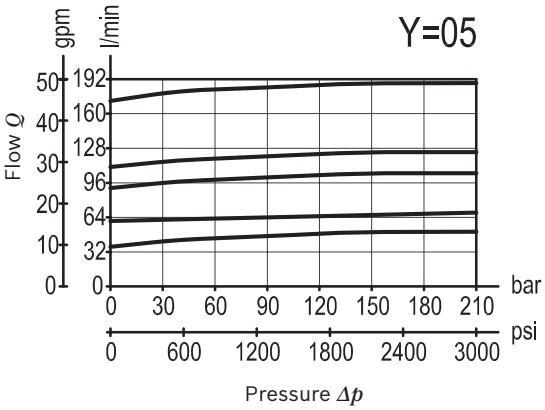

Dimensions [mm (inches)]

Ordering code

0M.32.03	X	05

Flow regulator
3 way, pressure compensated

Adjustments

70	Handknob and locknut	
80	Screw and locknut	
40	Graduated handknob	

Port sizes

E - R - T
G 1

Preferred types

Type	Material number
0M3203700500000	R930004235
0M3203800500000	R930004245
0M3203400500000	R930004225

Type	Material number

Dimensions

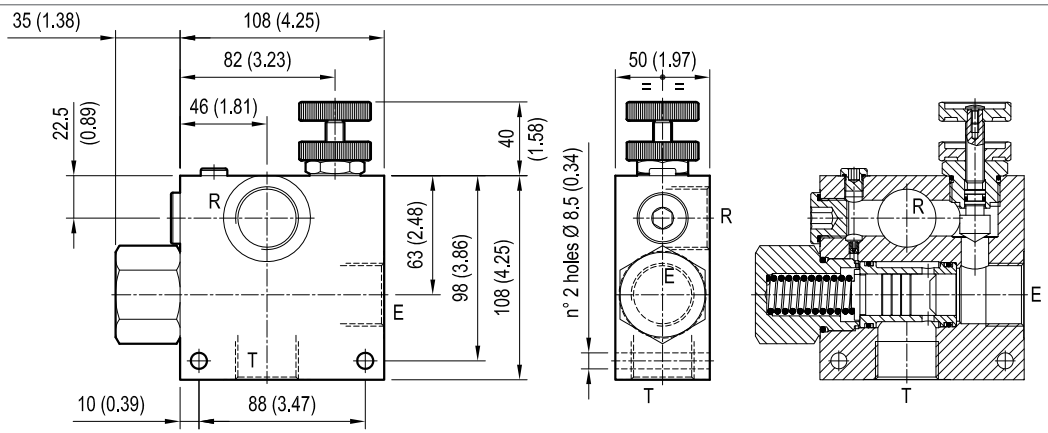

Flow regulator
3 way, pressure compensated

VRFC3-L

0M.32.03.50 - Y

Description

A constant flow rate, regardless of system pressures, is established from E to R, while a minimum pressure differential of appr. 5 bar (70 psi) exists between the two ports. Input flow supplied to E in excess of the regulated output at R is by-passed to T. Output flow can be varied from closed to the nominal maximum rating for the valve. Reverse flow from R to E is limited by the selected opening of the restrictor and is not pressure compensated. Flow from T to E or from T to R is not possible. Increasing or decreasing inlet flow may cause slight increase or decrease of Regulated flow.

Technical data

Operating pressure	up to 210 bar (3000 psi)
QE= max. inlet flow “E” port (see “Dimensions”)	
QR= max. regulated flow “R” port (see “Dimensions”)	
Weight	see “Dimensions”
Manifold material	Aluminium
Note: aluminium bodies are often strong enough for operating pressures exceeding 210 bar (3000 psi), depending from the fatigue life expected in the specific application. If in doubt, consult our Service Network.	
Fluid	Mineral oil (HL, HLP) according DIN 51524
Fluid temperature range	-30 °C to 100 (-22 to 212 °F)
Viscosity range	5 to 800 mm²/s (cSt)
Recommended degree of fluid contamination	Class 19/17/14 according to ISO 4406
Other technical data	see data sheet 18350-50

Note: for applications outside these parameters, please consult us.

Characteristic curve

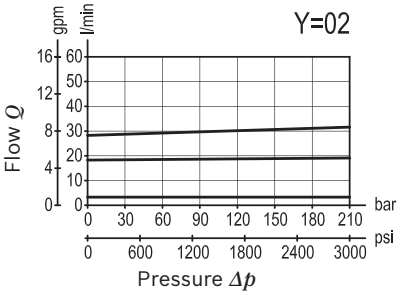

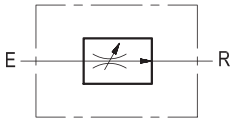

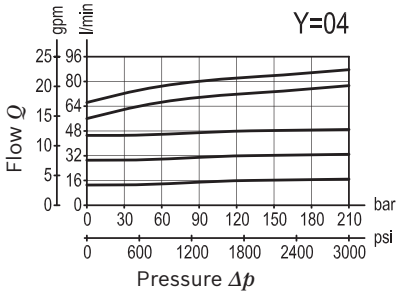

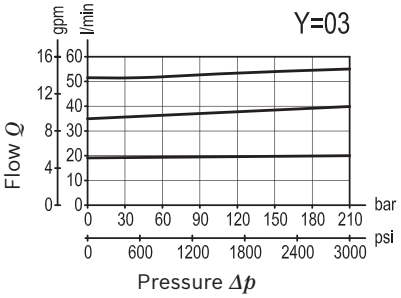

Dimensions [mm (inches)]

Ordering code

0M.32.03	50	Y

Flow regulator
3 way, pressure compensated

Adjustments

Lever with built in friction clutch

Port sizes	E - R
02	G 3/8
03	G 1/2
04	G 3/4

Preferred types

Type	Material number
0M3203500200000	R930004228
0M320350030000A	R930004229
0M3203500400000	R930004230

Type	Material number

Dimensions

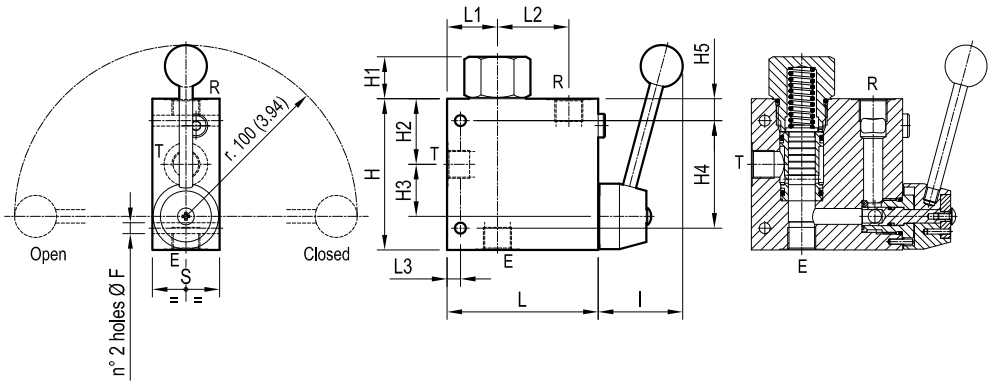

50 (1.97)	7 (0.28)	50 (1.97)	35 (1.38)	108 (4.25)	50 (1.97)	10 (0.39)	88 (3.47)	35 (1.38)	44 (1.73)	25 (0.98)	108 (4.25)	8.5 (0.34)	90 l/min 24 gpm	150 l/min 40 gpm	G 3/4	2.1 (4.6)
40 (1.58)	8 (0.32)	42.5 (1.67)	30 (1.18)	90 (3.54)	50 (1.97)	13 (0.51)	64 (2.52)	31 (1.22)	39 (1.54)	25 (0.98)	90 (3.54)	6.5 (0.26)	55 l/min 15 gpm	90 l/min 24 gpm	G 1/2	1.13 (2.49)
40 (1.58)	8 (0.32)	42.5 (1.67)	30 (1.18)	90 (3.54)	50 (1.97)	13 (0.51)	64 (2.52)	31 (1.22)	39 (1.54)	25 (0.98)	90 (3.54)	6.5 (0.26)	30 l/min 8 gpm	55 l/min 15 gpm	G 3/8	1.13 (2.49)
S	L3	L2	L1	L	l	H5	H4	H3	H2	H1	H	F	QR	QE	Y	Weight Kg (lbs)

Flow regulator
3 way, pressure compensated

A-VRFC3

0M.C2.03 - X - Y

Description

A constant flow rate, regardless of system pressures, is established from E to R, while a minimum pressure differential of appr. 5 bar (70 psi) exists between the two ports. Input flow supplied to E in excess of the regulated output at R is by-passed to T. Output flow can be varied from closed to the nominal maximum rating for the valve. Reverse flow from R to E is limited by the selected opening of the restrictor and is not pressure compensated. Flow from T to E or from T to R is not possible. Increasing or decreasing inlet flow may cause slight increase or decrease of Regulated flow.

Technical data

Max operating pressure	350 bar (5000 psi)
QE= max. inlet flow “E” port (see “Dimensions”)	
QR= max. regulated flow “R” port (see “Dimensions”)	
Flow range adjustment	0 - 3 turns
Weight	see “Dimensions”
Manifold material	Zinc plated steel
Fluid	Mineral oil (HL, HLP) according DIN 51524
Fluid temperature range	-30 °C to 100 (-22 to 212 °F)
Viscosity range	5 to 800 mm^2/s (cSt)
Recommended degree of fluid contamination	Class 19/17/14 according to ISO 4406
Other technical data	see data sheet 18350-50

Note: for applications outside these parameters, please consult us.

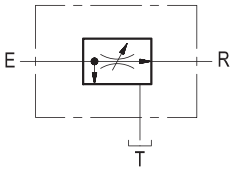

Characteristic curve

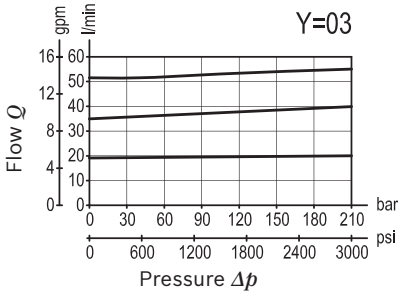

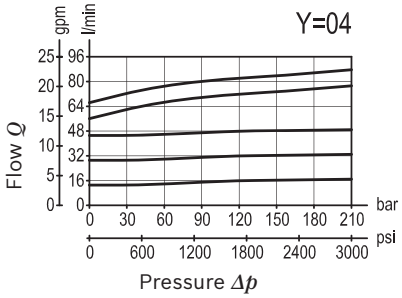

Dimensions [mm (inches)]

Ordering code

0M.C2.03	X	Y

Flow regulator
3 way, pressure compensated

Adjustments		
70	Handknob and locknut	
80	Screw and locknut	
40	Graduated handknob	

Port sizes	E - R - T
03	G 1/2
04	G 3/4

Preferred types

Type	Material number
0MC20370030000A	R930004477
0MC203700400000	R930004478
0MC20380030000A	R930004480

Type	Material number
0MC203800400000	R930006088
0MC20340030000A	R930004474
0MC203400400000	R930004475

Dimensions

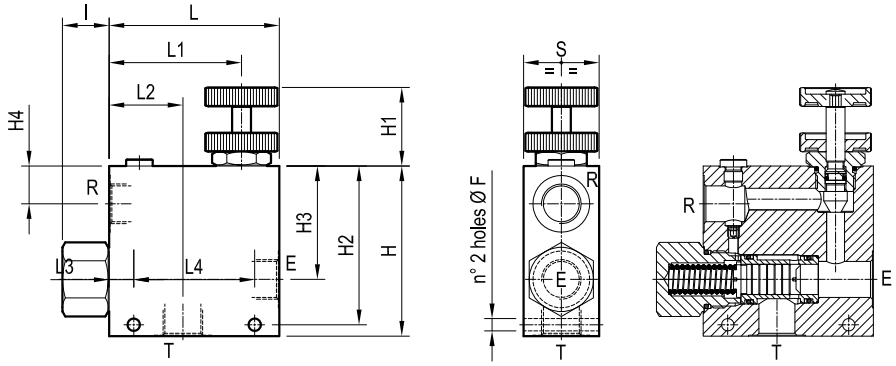

50 (1.97)	88 (3.47)	10 (0.39)	44 (1.73)	79 (3.11)	108 (4.25)	21 (0.83)	23 (0.91)	73 (2.87)	101 (3.98)	40 (1.58)	108 (4.25)	8.5 (0.34)	90 l/min 24 gpm	150 l/min 40 gpm	G 3/4	4.3 (9.5)
40 (1.58)	64 (2.52)	13 (0.51)	39 (1.54)	70 (2.76)	90 (3.54)	21 (0.83)	17.5 (0.69)	60 (2.36)	84 (3.31)	40 (1.58)	90 (3.54)	6.5 (0.26)	55 l/min 15 gpm	90 l/min 24 gpm	G 1/2	2.1 (4.6)
S	L4	L3	L2	L1	L	I	H4	H3	H2	H1	H	F	QR	QE	Y	Weight kg (lbs)

Flow regulator
3 way, pressure compensated

A-VRFC3

0M.C2.03 - X - 05

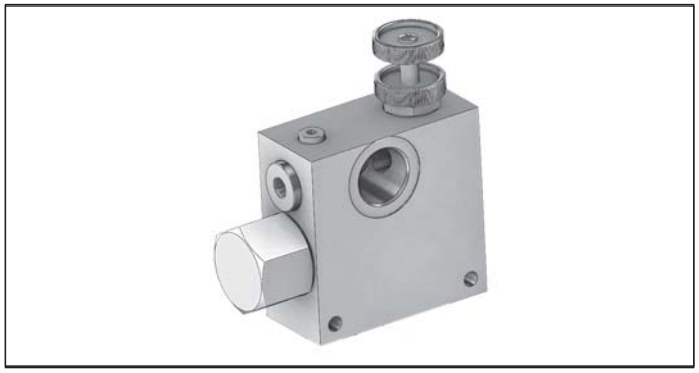

Technical data

Max. operating pressure	350 bar (5000 psi)
QE= max. inlet flow “E” port 280 l/min. (74 gpm)	
QR= max. regulated flow “R” port 190 l/min. (50 gpm)	
Flow range adjustment	0 - 3 turns
Weight	4.4 kg (9.7 lbs)
Manifold material	Zinc plated steel
Fluid	Mineral oil (HL, HLP) according DIN 51524
Fluid temperature range	-30 °C to 100 (-22 to 212 °F)
Viscosity range	5 to 800 mm^2/s (cSt)
Recommended degree of fluid contamination	Class 19/17/14 according to ISO 4406
Other technical data	see data sheet 18350-50

Note: for applications outside these parameters, please consult us.

Description

A constant flow rate, regardless of system pressures, is established from E to R, while a minimum pressure differential of appr. 5 bar (70 psi) exists between the two ports. Input flow supplied to E in excess of the regulated output at R is by-passed to T. Output flow can be varied from closed to the nominal maximum rating for the valve. Reverse flow from R to E is limited by the selected opening of the restrictor and is not pressure compensated. Flow from T to E or from T to R is not possible. Increasing or decreasing inlet flow may cause slight increase or decrease of Regulated flow.

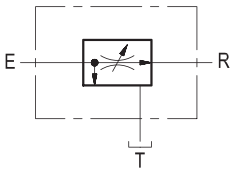

Characteristic curve

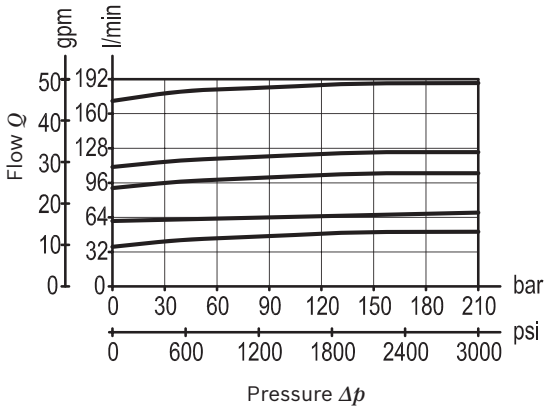

Dimensions [mm (inches)]

Ordering code

0M.C2.03	X	05

Flow regulator
3 way, pressure compensated

Adjustments

70	Handknob and locknut	
80	Screw and locknut	
40	Graduated handknob	

Port sizes

E - R - T
G 1

Preferred types

Type	Material number
0MC203700500000	R930004479
0MC203800500000	R930004481
0MC203400500000	R930004476

Type	Material number

Dimensions

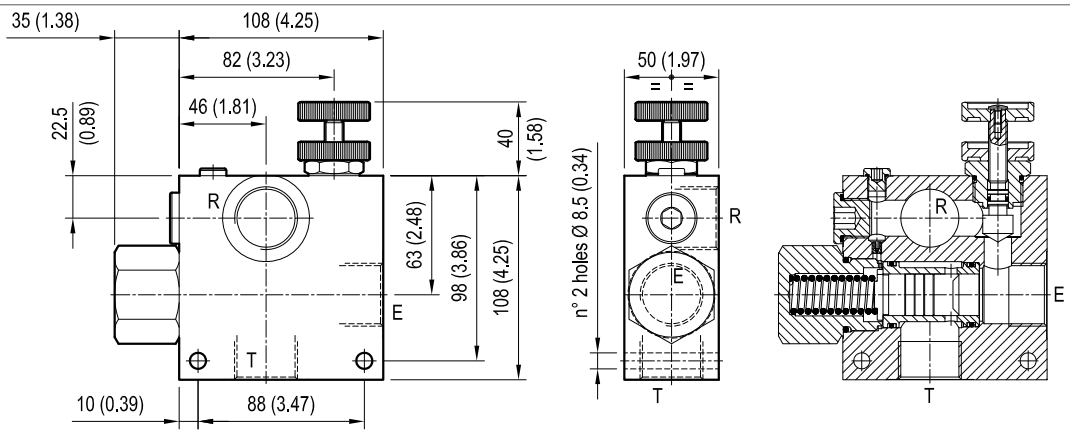

Flow regulator
3 way, pressure compensated
with check valve for free reverse flow

VRFC3-VU 0M.39.03 - X - Y

Description

A constant flow rate, regardless of system pressures, is established from E to R, while a minimum pressure differential of appr. 5 bar (70 psi) exists between the two ports. Input flow supplied to E in excess of the regulated output at R is by-passed to T. Output flow can be varied from closed to the nominal maximum rating for the valve. Reverse flow from R to E is limited by the selected opening of the restrictor and is not pressure compensated. Flow from T to E or from T to R is not possible. Increasing or decreasing inlet flow may cause slight increase or decrease of Regulated flow.

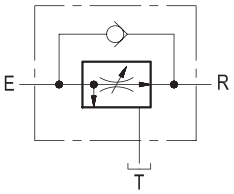

Technical data

Operating pressure	up to 210 bar (3000 psi)
Max. flow (see “Performance graph”)	
QE= max. inlet flow “E” port (see “Dimensions”)	
QR= max. regulated flow “R” port (see “Dimensions”)	
Flow range adjustment	0 - 3 turns
Weight	see “Dimensions”
Manifold material	Aluminium
Note: aluminium bodies are often strong enough for operating pressures exceeding 210 bar (3000 psi), depending from the fatigue life expected in the specific application. If in doubt, consult our Service Network.	
Fluid	Mineral oil (HL, HLP) according DIN 51524
Fluid temperature range	-30 °C to 100 (-22 to 212 °F)
Viscosity range	5 to 800 mm^2/s (cSt)
Recommended degree of fluid contamination	Class 19/17/14 according to ISO 4406
Other technical data	see data sheet 18350-50

Note: for applications outside these parameters, please consult us.

Characteristic curve

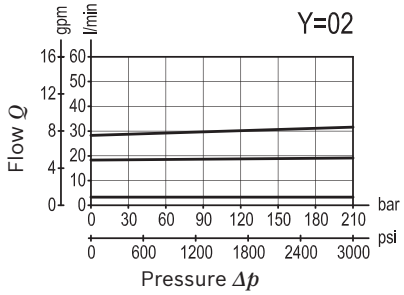

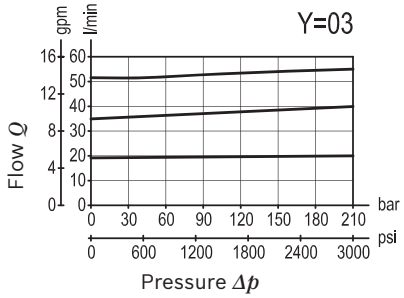

Dimensions [mm (inches)]

Ordering code

0M.39.03	X	Y

Flow regulator
3 way, pressure compensated
with check valve for free reverse flow

Adjustments		
70	Handknob and locknut	
80	Screw and locknut	
40	Graduated handknob	

Port sizes	E - R - T
02	G 3/8
03	G 1/2

Preferred types

Type	Material number
0M390370020000A	R930004298
0M390370030000A	R930004299
0M3903800200000	R930004301

Type	Material number
0M390380030000A	R930004302
0M390340020000A	R930004293
0M3903400300000	R930004295

Dimensions

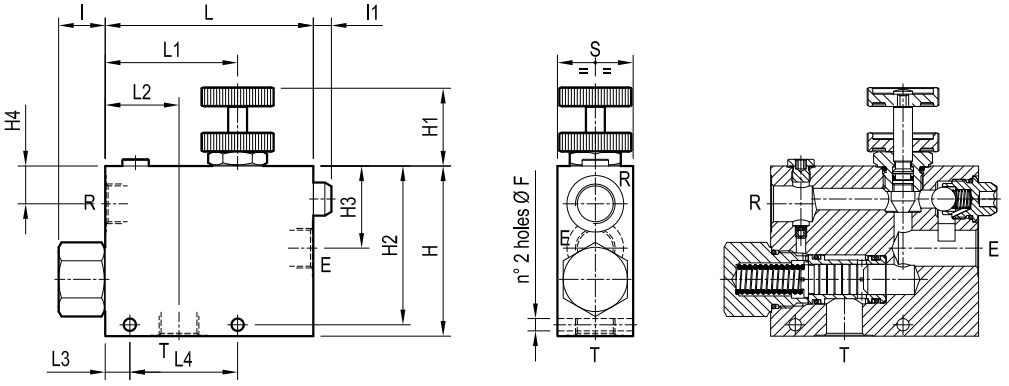

40 (1.58)	57 (2.24)	13 (0.51)	39 (1.54)	70 (2.76)	110 (4.33)	10 (0.39)	25 (0.98)	17.5 (0.69)	43.5 (1.71)	84 (3.31)	40 (1.58)	90 (3.54)	6.5 (0.26)	55 l/min 15 gpm	90 l/min 24 gpm	G 1/2	1.15 (2.54)
40 (1.58)	57 (2.24)	13 (0.51)	39 (1.54)	70 (2.76)	110 (4.33)	10 (0.39)	25 (0.98)	17.5 (0.69)	42 (1.65)	84 (3.31)	40 (1.58)	90 (3.54)	6.5 (0.26)	30 l/min 8 gpm	55 l/min 15 gpm	G 3/8	1.15 (2.54)
S	L4	L3	L2	L1	L	I1	I	H4	H3	H2	H1	H	F	QR	QE	Y	Weight kg (lbs)

Flow regulator
3 way, pressure compensated
with check valve for free reverse flow

VRFC3-VU

0M.39.03 - X - 04

Description

A constant flow rate, regardless of system pressures, is established from E to R, while a minimum pressure differential of appr. 5 bar (70 psi) exists between the two ports. Input flow supplied to E in excess of the regulated output at R is by-passed to T. Output flow can be varied from closed to the nominal maximum rating for the valve. Reverse flow from R to E is limited by the selected opening of the restrictor and is not pressure compensated. Flow from T to E or from T to R is not possible. Increasing or decreasing inlet flow may cause slight increase or decrease of Regulated flow.

Technical data

Operating pressure	up to 210 bar (3000 psi)
QE= max. inlet flow “E” port 150 l/min. (40 gpm)	
QR= max. regulated flow “R” port 90 l/min. (24 gpm)	
Flow range adjustment	0 - 3 turns
Weight	2.4 kg (5.3 lbs)
Manifold material	Aluminium
Note: aluminium bodies are often strong enough for operating pressures exceeding 210 bar (3000 psi), depending from the fatigue life expected in the specific application. If in doubt, consult our Service Network.	
Fluid	Mineral oil (HL, HLP) according DIN 51524
Fluid temperature range	-30 °C to 100 (-22 to 212 °F)
Viscosity range	5 to 800 mm^2/s (cSt)
Recommended degree of fluid contamination	Class 19/17/14 according to ISO 4406
Other technical data	see data sheet 18350-50

Note: for applications outside these parameters, please consult us.

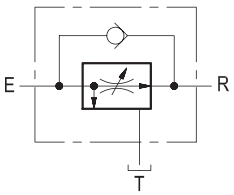

Characteristic curve

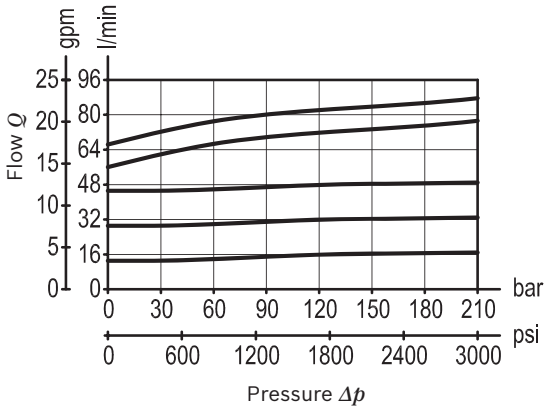

Dimensions [mm (inches)]

Ordering code

0M.39.03	X	04

Flow regulator
3 way, pressure compensated
with check valve for free reverse flow

Adjustments

70	Handknob and locknut	
80	Screw and locknut	
40	Graduated handknob	

Port sizes	E - R - T
	G 3/4

Preferred types

Type	Material number
0M390370040000A	R930004300
0M3903800400000	R930000380
0M390340040000A	R930004297

Type	Material number

Dimensions

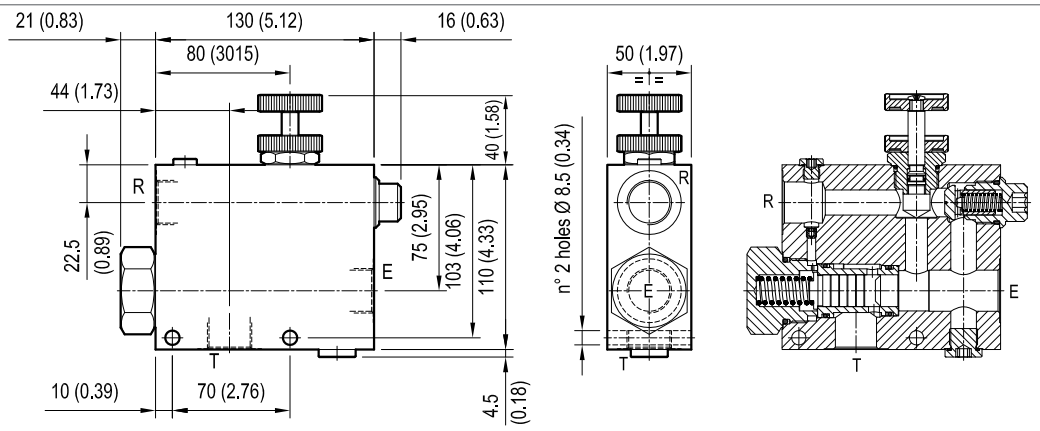

Flow regulator
3 way, pressure compensated with relief

VRFC3-VS

0M.33.03 - X - Y

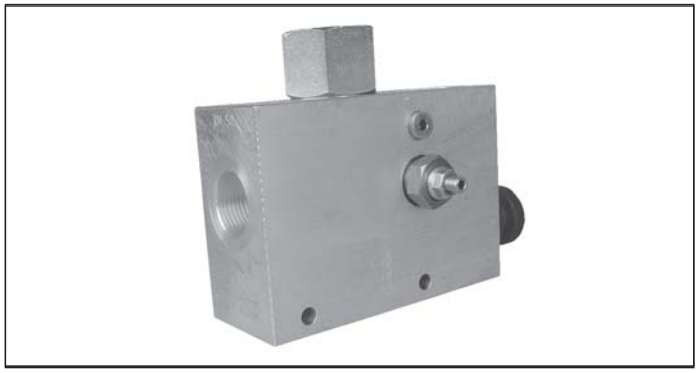

Description

A constant pressure compensated flow rate is established from E to R, while a minimum pressure differential of appr. 5 bar (70 psi) exists between the two ports. Input flow supplied to E in excess of the regulated output at R is by-passed to T. Output flow can be varied from closed to the nominal maximum rating for the valve. The valve module includes a small pilot relief cartridge which senses the pressure of the Regulated flow and diverts it to tank if the maximum allowed pressure is reached. Reverse flow from R to E is limited by the selected opening of the restrictor and is not pressure compensated. Flow from T to E or from T to R is not permitted.

Technical data

Max. pressure	210 bar (3000 psi)
Adj. relief valve: range 35-210 bar (500-3000 psi) Standard setting: 210 bar (3000 psi)	
QE= max. inlet flow “E” port (see “Dimensions”)	
QR= max. regulated flow “R” port (see “Dimensions”	
Flow range adjustment	0 - 3 turns
Weight	see “Dimensions”
Manifold material	Aluminium
Note: aluminium bodies are often strong enough for operating pressures exceeding 210 bar (3000 psi), depending from the fatigue life expected in the specific application. If in doubt, consult our Service Network.	
Fluid	Mineral oil (HL, HLP) according DIN 51524
Fluid temperature range	-30 °C to 100 (-22 to 212 °F)
Viscosity range	10 to 500 mm^2/s (cSt)
Recommended degree of fluid contamination	Class 19/17/14 according to ISO 4406
Other technical data	see data sheet 18350-50

Note: for applications outside these parameters, please consult us.

Characteristic curve

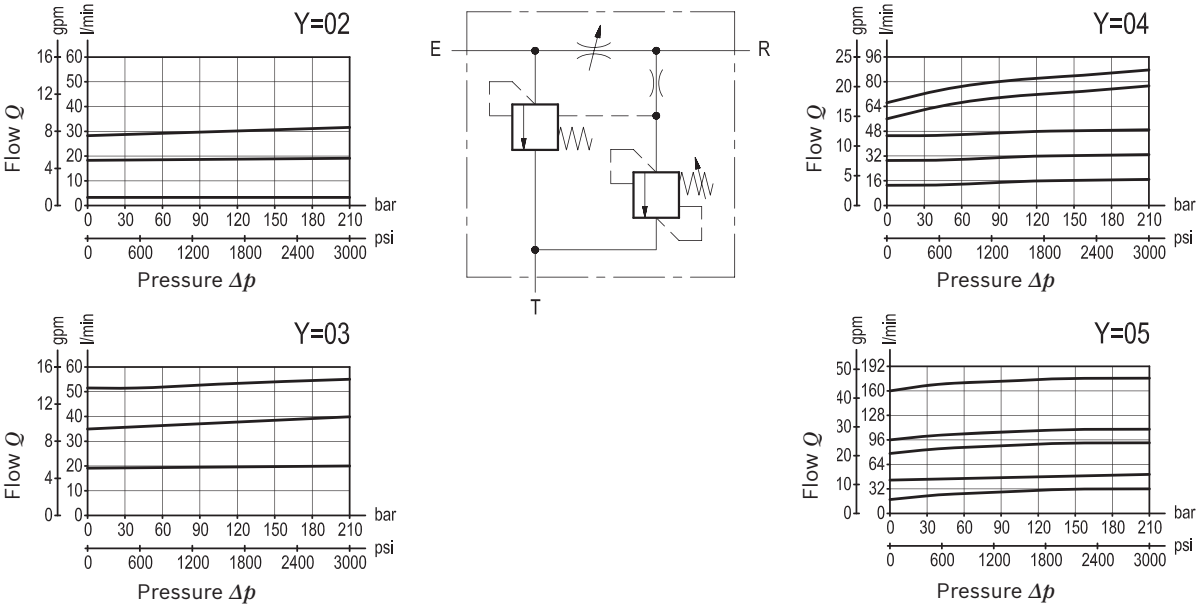

Dimensions [mm (inches)]

Ordering code

0M.33.03	X	Y

Flow regulator
3 way, pressure compensated
with relief

Adjustments		
70	Handknob and locknut	
80	Screw and locknut	
40	Graduated handknob	

Port sizes	E - R - T
02	G 3/8
03	G 1/2
04	G 3/4
05	G 1

Tamper resistant cap code
ordering code 11.04.23.002
Mat. no. R930000752

Preferred types

Type	Material number
0M330380040000A	R930004260
0M330370030000A	R930004262
0M330370040000A	R930004263
0M330370050000A	R930004264
0M330380020000A	R930004266
0M330380030000A	R930004267

Type	Material number
0M330380040000A	R930004268
0M330380050000A	R930004270
0M330340020000A	R930004251
0M330340030000A	R930004252
0M330340040000A	R930004254
0M330340050000A	R930004255

Dimensions

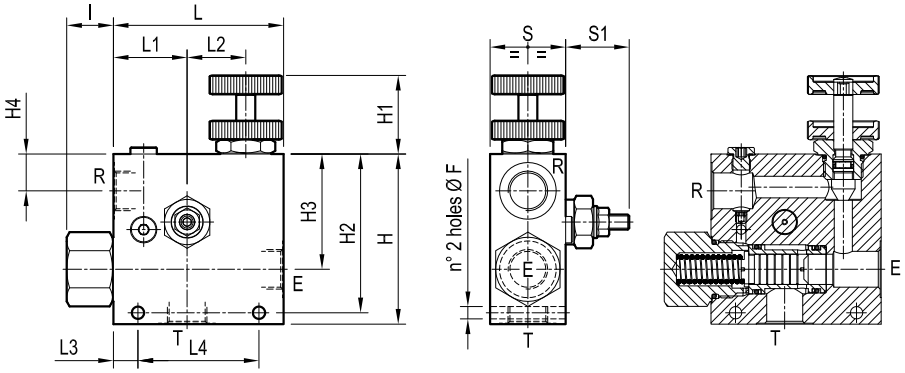

34 (1.34)	60 (2.36)	75 (2.95)	20 (0.79)	62 (2.44)	65 (2.56)	155 (6.1)	25 (0.98)	46 (1.81)	83 (3.27)	100 (3.94)	40 (1.58)	110 (4.33)	8.5 (0.34)	190 l/min 50 gpm	280 l/min 74 gpm	G 1	3.3 (7.3)
34 (1.34)	50 (1.97)	88 (3.47)	10 (0.39)	35 (1.38)	44 (1.73)	108 (4.25)	25 (0.98)	23 (0.91)	73 (2.87)	101 (3.98)	40 (1.58)	108 (4.25)	8.5 (0.34)	90 l/min 24 gpm	150 l/min 40 gpm	G 3/4	2 (4.4)
34 (1.34)	40 (1.58)	64 (2.52)	13 (0.51)	31 (1.22)	39 (1.54)	90 (3.54)	25 (0.98)	17.5 (0.69)	60 (2.36)	84 (3.31)	40 (1.58)	90 (3.54)	6.5 (0.26)	55 l/min 15 gpm	90 l/min 24 gpm	G 1/2	1.1 (2.42)
34 (1.34)	40 (1.58)	64 (2.52)	13 (0.51)	31 (1.22)	39 (1.54)	90 (3.54)	25 (0.98)	17.5 (0.69)	60 (2.36)	84 (3.31)	40 (1.58)	90 (3.54)	6.5 (0.26)	30 l/min 8 gpm	55 l/min 15 gpm	G 3/8	1.1 (2.42)
S1	S	L4	L3	L2	L1	L	I	H4	H3	H2	H1	H	F	QR	QE	Y	Weight kg (lbs)

Flow regulator
3 way, pressure compensated with relief

VRFC3-VS

0M.33.03.50 - Y

Description

A constant pressure compensated flow rate is established from E to R, while a minimum pressure differential of appr. 5 bar (70 psi) exists between the two ports. Input flow supplied to E in excess of the regulated output at R is by-passed to T. Output flow can be varied from zero (Closed) to the nominal maximum rating for the valve (Open). The valve module includes a small pilot relief cartridge which senses the pressure of the Regulated flow and diverts it to tank if the maximum allowed pressure is reached. Reverse flow from R to E is limited by the selected opening of the lever controlled restrictor and is not pressure compensated. Flow from T to E or from T to R is not permitted.

Technical data

Operating pressure	210 bar (3000 psi)
Adj. relief valve: range 35-210 bar (500-3000 psi) Standard setting: 210 bar (3000 psi)	
QE= max. inlet flow “E” port (see “Dimensions”)	
QR= max. regulated flow “R” port (see “Dimensions”)	
Weight	see “Dimensions”
Manifold material	Aluminium
Note: aluminium bodies are often strong enough for operating pressures exceeding 210 bar (3000 psi), depending from the fatigue life expected in the specific application. If in doubt, consult our Service Network.	
Fluid	Mineral oil (HL, HLP) according DIN 51524
Fluid temperature range	-30 °C to 100 (-22 to 212 °F)
Viscosity range	10 to 500 mm^2/s (cSt)
Recommended degree of fluid contamination	Class 19/17/14 according to ISO 4406
Other technical data	see data sheet 18350-50

Note: for applications outside these parameters, please consult us.

Characteristic curve

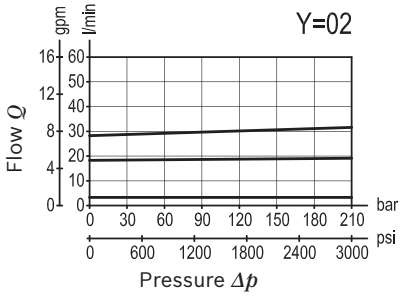

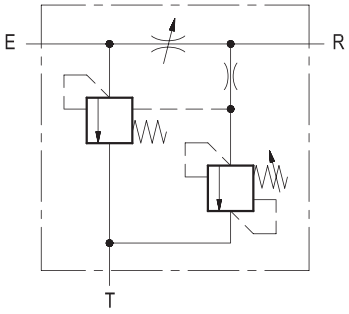

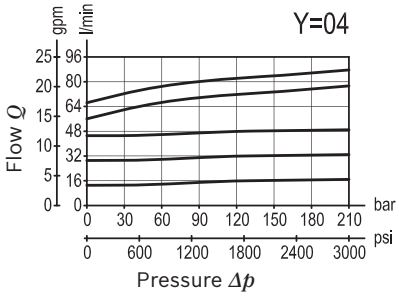

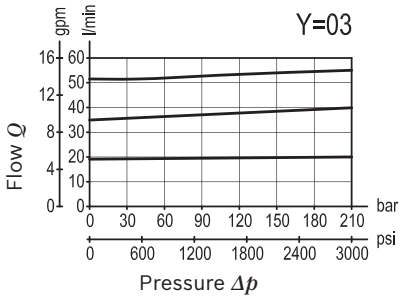

Dimensions [mm (inches)]

Ordering code

0M.33.03	50	Y

Flow regulator
3 way, pressure compensated
with relief

Adjustments

Lever with built in friction clutch

Port sizes	E - R - T
02	G 3/8
03	G 1/2
04	G 3/4

Tamper resistant cap code
ordering code 11.04.23.002
Mat. no. R930000752

Preferred types

Type	Material number
0M330350020000A	R930004256
0M330350030000A	R930004257
0M330350040000A	R930004258

Type	Material number

Dimensions

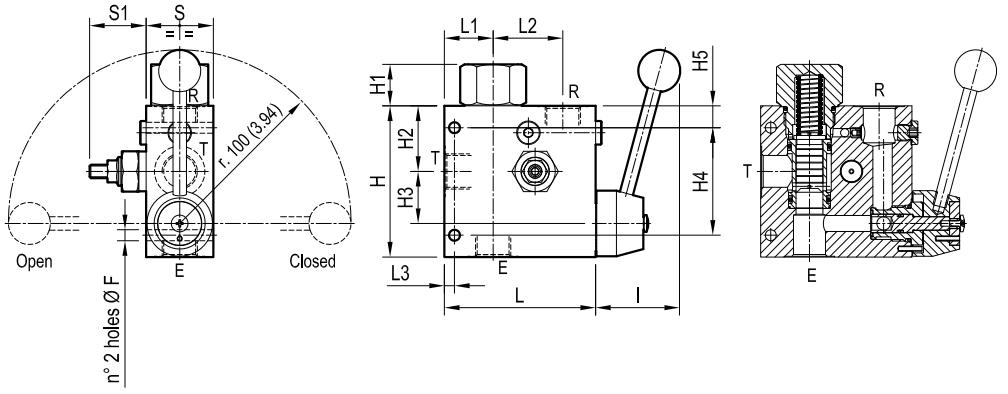

34 (1.34)	50 (1.97)	7 (0.28)	50 (1.97)	35 (1.38)	108 (4.25)	50 (1.97)	10 (0.39)	88 (3.47)	35 (1.38)	44 (1.73)	25 (0.98)	108 (4.25)	8.5 (0.34)	90 l/min 24 gpm	150 l/min 40 gpm	G 3/4	2.2 (4.9)
34 (1.34)	40 (1.58)	6 (0.24)	42.5 (1.67)	30 (1.18)	90 (3.54)	50 (1.97)	13 (0.51)	64 (2.52)	31 (1.22)	39 (1.54)	25 (0.98)	90 (3.54)	6.5 (0.26)	55 l/min 15 gpm	90 l/min 24 gpm	G 1/2	1.17 (2.58)
34 (1.34)	40 (1.58)	6 (0.24)	42.5 (1.67)	30 (1.18)	90 (3.54)	50 (1.97)	13 (0.51)	64 (2.52)	31 (1.22)	39 (1.54)	25 (0.98)	90 (3.54)	6.5 (0.26)	30 l/min 8 gpm	55 l/min 15 gpm	G 3/8	1.17 (2.58)
S1	S	L3	L2	L1	L	l	H5	H4	H3	H2	H1	H	F	QR	QE	Y	Weight kg (lbs)

Flow regulator
3 way, pressure compensated with relief and solenoid control

VRFC3-VS-VEI

0M.36.03 - X - Y

Description

A constant pressure compensated flow rate is established from E to R, while a minimum pressure differential of appr. 5 bar (70 psi) exists between the two ports. Input flow supplied to E in excess of the regulated output at R is by-passed to T. Output flow can be varied from closed to the nominal maximum rating of the valve and it can be dumped to Tank in two ways: 1) by a N.O. solenoid cartridge which determines Regulated flow dumping when de-energized; 2) by a pilot relief cartridge which determines Regulated flow dumping if the maximum allowed pressure is reached. Reverse flow from R to E is limited by the selected opening of the restrictor and is not pressure compensated. Flow from T to E or from T to R is not permitted.

Technical data

Operating pressure	210 bar (3000 psi)
Adj. relief valve: range 35-210 bar (500-3000 psi) Standard setting: 210 bar (3000 psi)	
QE= max. inlet flow “E” port (see “Dimensions”)	
QR= max. regulated flow “R” port (see “Dimensions”)	
Flow range adjustment	0 - 3 turns
Pressure drop from E-T: cracking pressure 6 bar (90 psi), full flow 12 bar (175 psi)	
Weight	see “Dimensions”
Manifold material	Aluminium
Note: aluminium bodies are often strong enough for operating pressures exceeding 210 bar (3000 psi), depending from the fatigue life expected in the specific application. If in doubt, consult our Service Network.	
Fluid	Mineral oil (HL, HLP) according DIN 51524
Fluid temperature range	-20 °C to 80 (-4 to 176 °F)
Viscosity range	20 to 380 mm²/s (cSt)
Recommended degree of fluid contamination	Class 19/17/14 according to ISO 4406
The coil must be ordered separately	
Other technical data	see data sheet 18350-50

Note: for applications outside these parameters, please consult us.

Characteristic curve

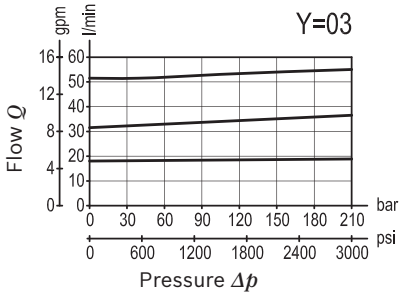

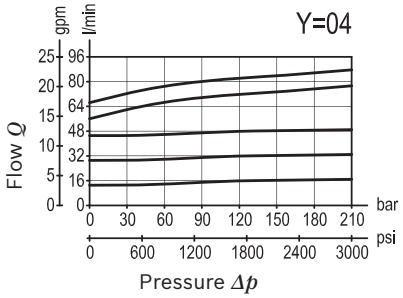

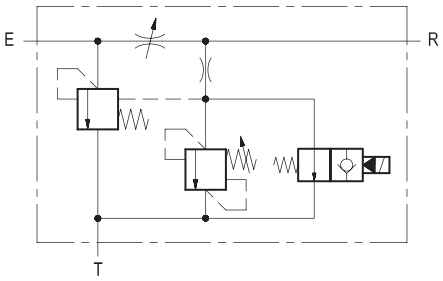

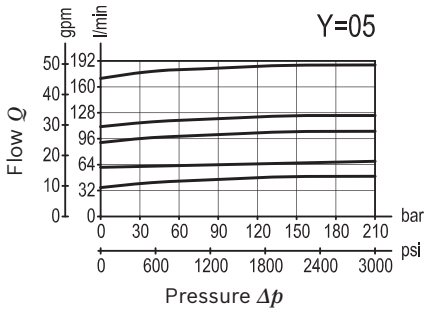

Dimensions [mm (inches)]

Ordering code

0M.36.03	X	Y

Flow regulator
3 way, pressure compensated
with relief and solenoid control

Adjustments		
70	Handknob and locknut	
80	Screw and locknut	
40	Graduated handknob	

Port sizes	E - R - T
03	G 1/2
04	G 3/4
05	G 1

Tamper resistant cap code
ordering code 11.04.23.002
Mat. no. R930000752

Preferred types

Type	Material number
0M360370030000C	R930038417
0M360370040000B	R930004279
0M360370050000A	R930004280
0M360380030000A	R930038418

Type	Material number
0M3603800400000	R930000346
0M3603800500000	R930000382
0M360340030000C	R930038416
0M3603400400000	R930000301

Dimensions

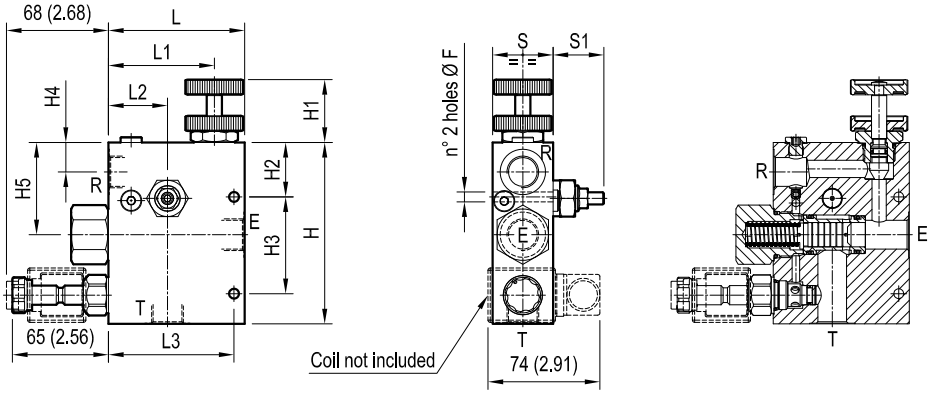

34 (1.34)	60 (2.36)	100 (3.94)	46 (1.81)	83 (3.27)	110 (3.94)	90 (3.54)	28 (1.1)	75 (2.95)	60 (2.36)	40 (1.58)	155 (6.1)	8.5 (0.34)	190 l/min 50 gpm	280 l/min 74 gpm	G 1	3.1 (6.8)
34 (1.34)	50 (1.97)	100 (3.94)	44 (1.73)	81 (3.19)	110 (4.33)	75 (2.95)	23 (0.91)	74 (2.91)	46 (1.81)	40 (1.58)	140 (5.51)	8.5 (0.34)	90 l/min 24 gpm	150 l/min 40 gpm	G 3/4	2.7 (6)
34 (1.34)	40 (1.58)	83 (3.27)	39 (1.54)	70 (2.76)	90 (3.54)	60 (2.36)	17.5 (0.69)	64 (2.52)	36 (1.42)	40 (1.58)	120 (4.72)	6.5 (0.26)	55 l/min 15 gpm	90 l/min 24 gpm	G 1/2	1.68 (3.7)
S1	S	L3	L2	L1	L	H5	H4	H3	H2	H1	H	F	QR	QE	Y	Weight kg (lbs)

Flow regulator
3 way, pressure compensated
with relief and solenoid by-pass

VRFC3-VS-BPE 0M.38.03 - X - Y

Description

A constant pressure compensated flow rate is established from E to R, while a minimum pressure differential of appr. 5 bar (70 psi) exists between the two ports. Input flow supplied to E in excess of the regulated output at R is by-passed to T. Regulated flow can be varied from closed to the nominal maximum rating of the valve and its pressure is controlled by a relief cartridge which will dump to Tank the output flow if the maximum pressure is reached. A normally open solenoid cartridge by-passes all Inlet flow to tank when de-energized. Reverse flow from R to E is limited by the selected opening of the restrictor and is not pressure compensated. Flow from T to R is not permitted.

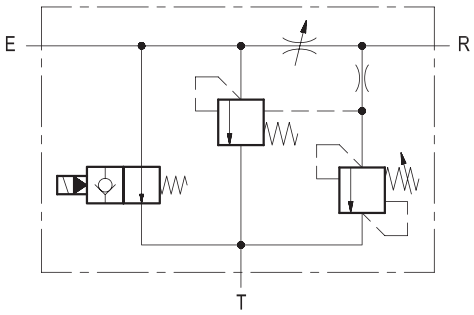

Technical data

Operating pressure	210 bar (3000 psi)
Adj. relief valve: range 35-210 bar (500-3000 psi) Standard setting: 210 bar (3000 psi)	
QE= max. inlet flow “E” port (see “Dimensions”)	
QR= max. regulated flow “R” port (see “Dimensions”)	
Flow range adjustment	0 - 3 turns
Weight	see “Dimensions”
Manifold material	Aluminium
Note: aluminium bodies are often strong enough for operating pressures exceeding 210 bar (3000 psi), depending from the fatigue life expected in the specific application. If in doubt, consult our Service Network.	
Fluid	Mineral oil (HL, HLP) according DIN 51524
Fluid temperature range	-20 °C to 80 (-4 to 176 °F)
Viscosity range	20 to 380 mm^2/s (cSt)
Recommended degree of fluid contamination	Class 19/17/14 according to ISO 4406
The coil must be ordered separately	
Other technical data	see data sheet 18350-50

Note: for applications outside these parameters, please consult us.

Characteristic curve

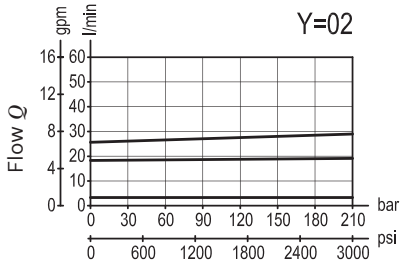

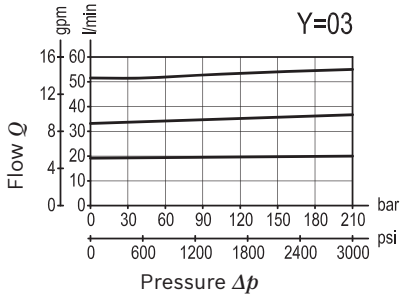

Dimensions [mm (inches)]

Ordering code

0M.38.03	X	Y

Flow regulator
3 way, pressure compensated
with relief and solenoid by-pass

Adjustments		
70	Handknob and locknut	
80	Screw and locknut	
40	Graduated handknob	

Port sizes	E - R - T
02	G 3/8
03	G 1/2

Tamper resistant cap code
ordering code 11.04.23.002
Mat. no. R930000752

Preferred types

Type	Material number
0M380370020000B	R930004286
0M380370030000C	R930004287
0M3803800200000	R930000466
0M380380030000B	R930004290

Type	Material number
0M3803400200000	R930000465
0M380340030000B	R930004284

Dimensions

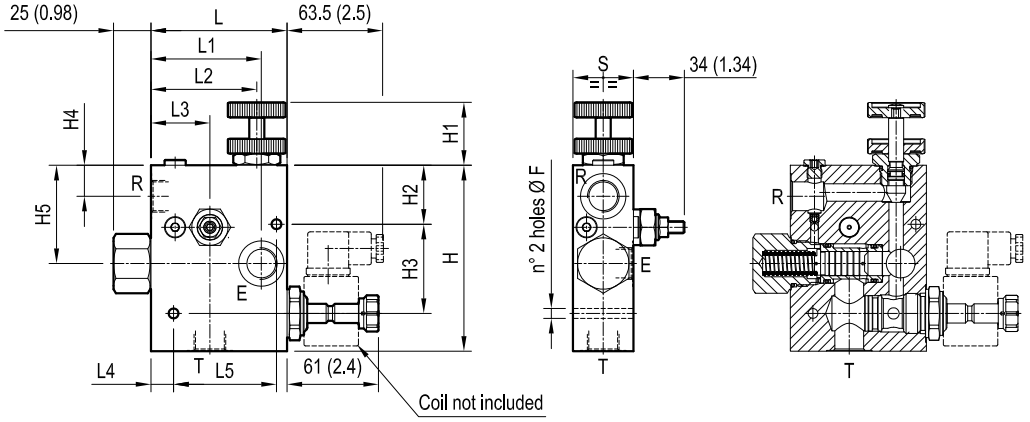

40 (1.58)	68 (2.68)	15 (0.59)	39 (1.54)	70 (2.76)	73 (2.87)	90 (3.54)	65 (2.56)	20.5 (0.81)	59 (2.32)	39 (1.54)	40 (1.58)	123 (4.84)	6.5 (0.26)	55 l/min 15 gpm	90 l/min 24 gpm	G 1/2	1.55 (3.42)
40 (1.58)	68 (2.68)	15 (0.59)	39 (1.54)	70 (2.76)	73 (2.87)	90 (3.54)	65 (2.56)	19.5 (0.77)	59 (2.32)	39 (1.54)	40 (1.58)	123 (4.84)	6.5 (0.26)	30 l/min 8 gpm	55 l/min 15 gpm	G 3/8	1.55 (3.42)
S	L5	L4	L3	L2	L1	L	H5	H4	H3	H2	H1	H	F	QR	QE	Y	Weight kg (lbs)

Flow regulator
3 way, pressure compensated with relief and solenoid by-pass

VRFC3-VS-BPE

0M.38.03 - X - 04

Description

A constant pressure compensated flow rate is established from E to R, while a minimum pressure differential of appr. 5 bar (70 psi) exists between the two ports. Input flow supplied to E in excess of the regulated output at R is by-passed to T. Regulated flow can be varied from closed to the nominal maximum rating of the valve and its pressure is controlled by a relief cartridge which will dump to Tank the output flow if the maximum pressure is reached. A normally open solenoid cartridge by-passes all Inlet flow to tank when de-energized. Reverse flow from R to E is limited by the selected opening of the restrictor and is not pressure compensated. Flow from T to R is not permitted.

Technical data

Operating pressure	up to 210 bar (3000 psi)
Adj. relief valve: range 35-210 bar (500-3000 psi) Standard setting: 210 bar (3000 psi)	
QE= max. inlet flow “E” port 150 l/min. (40 gpm)	
QR= max. regulated flow “R” port 90 l/min. (24 gpm)	
Flow range adjustment	0 - 3 turns
Weight	2.3 kg (5.1 lbs)
Manifold material	Aluminium
Note: aluminium bodies are often strong enough for operating pressures exceeding 210 bar (3000 psi), depending from the fatigue life expected in the specific application. If in doubt, consult our Service Network.	
Fluid	Mineral oil (HL, HLP) according DIN 51524
Fluid temperature range	-20 °C to 80 (-4 to 176 °F)
Viscosity range	20 to 380 mm²/s (cSt)
Recommended degree of fluid contamination	Class 19/17/14 according to ISO 4406
The coil must be ordered separately	
Other technical data	see data sheet 18350-50

Note: for applications outside these parameters, please consult us.

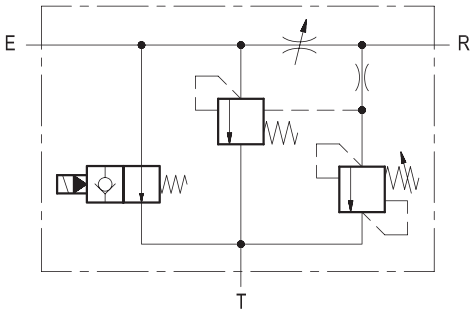

Characteristic curve

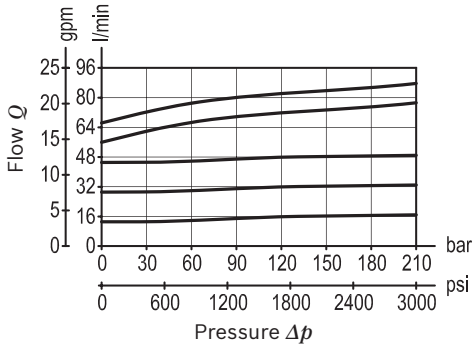

Dimensions [mm (inches)]

Ordering code

0M.38.03	X	04

Flow regulator
3 way, pressure compensated
with relief and solenoid by-pass

Adjustments

70	Handknob and locknut	
80	Screw and locknut	
40	Graduated handknob	

Port sizes

E - R - T
G 3/4

Tamper resistant cap code
ordering code 11.04.23.002
Mat. no. R930000752

Preferred types

Type	Material number
0M380370040000A	R930004289
0M3803800400000	R930000469
0M380340040000B	R930004285

Type	Material number

Dimensions

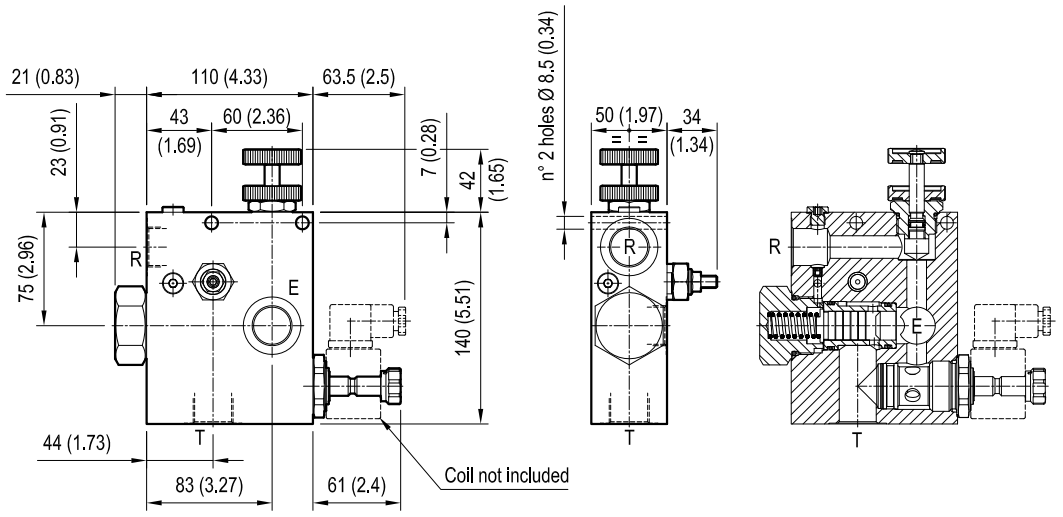

Flow regulator
3 way, combination type
pressure compensated

VRFC3C

0M.42.03 - X - Y

Description

A constant priority flow, regardless of system pressures, is established from E to P, while a minimum pressure differential of appr. 5 bar (70 psi) exists between the two ports. While the regulated priority flow from P is used in the priority circuit, the flow supplied to E in excess of priority is by-passed to B port and can be sent to power other actuators. Priority flow can be varied from closed to the nominal maximum rating of the valve. Reverse flow from P to E is limited by the selected opening of the restrictor and is not pressure compensated. Reverse flow from B is not permitted.

Technical data

Operating pressure	up to 210 bar (3000 psi)
QE= max. inlet flow “E” port (see “Dimensions”)	
QP= max. priority flow “P” port (see “Dimensions”	
Flow range adjustment	0 - 3 turns
Weight	see “Dimensions”
Manifold material	Aluminium
Note: aluminium bodies are often strong enough for operating pressures exceeding 210 bar (3000 psi), depending from the fatigue life expected in the specific application. If in doubt, consult our Service Network.	
Fluid	Mineral oil (HL, HLP) according DIN 51524
Fluid temperature range	-30 °C to 100 (-22 to 212 °F)
Viscosity range	5 to 800 mm^2/s (cSt)
Recommended degree of fluid contamination	Class 19/17/14 according to ISO 4406
Other technical data	see data sheet 18350-50

Note: for applications outside these parameters, please consult us.

Characteristic curve

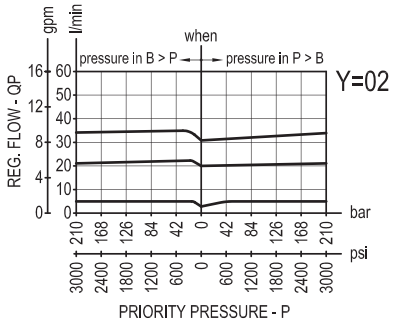

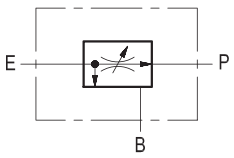

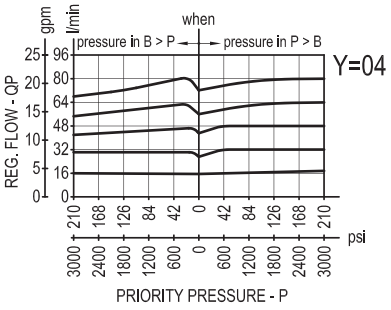

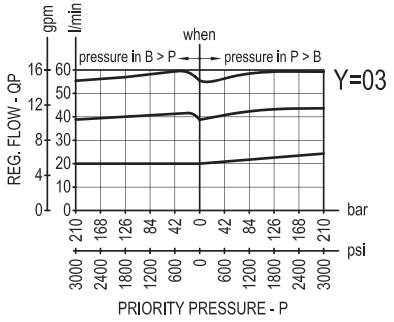

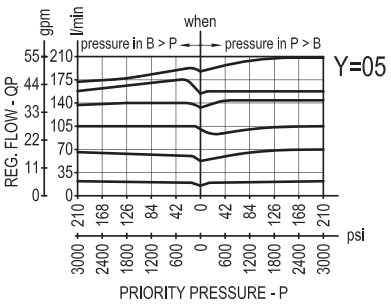

Dimensions [mm (inches)]

Ordering code

0M.42.03	X	Y

Flow regulator
3 way, combination type
pressure compensated

Adjustments		
70	Handknob and locknut	
80	Screw and locknut	
40	Graduated handknob	

Port sizes	E - B - P
02	G 3/8
03	G 1/2
04	G 3/4
05	G 1

Preferred types

Type	Material number
0M4203700200000	R930004324
0M4203700300000	R930004325
0M4203700400000	R930004328
0M4203700500000	R930004329
0M4203800200000	R930004332
0M4203800300000	R930004333

Type	Material number
0M4203800400000	R930004334
0M4203800500000	R930004336
0M4203400200000	R930004317
0M4203400300000	R930004318
0M4203400400000	R930004319
0M4203400500000	R930004320

Dimensions

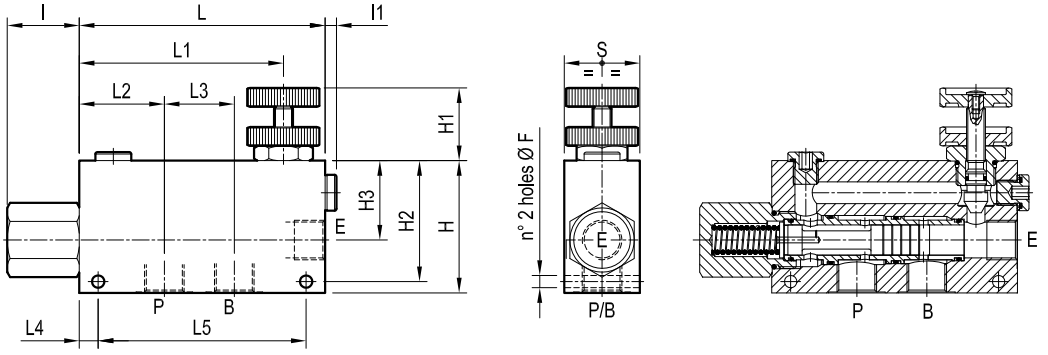

70 (2.76)	130 (5.12)	10 (0.39)	56.5 (2.22)	48 (1.89)	122.5 (4.82)	150 (5.91)	6 (0.24)	54 (2.13)	65 (2.56)	120 (4.72)	40 (1.58)	130 (5.12)	8.5 (0.34)	190 l/min 50 gpm	380 l/min 100 gpm	G 1	4.4 (9.7)
50 (1.97)	135 (5.32)	10 (0.39)	44 (1.73)	54 (2.13)	130 (5.12)	155 (6.1)	6 (0.24)	35 (1.38)	55 (2.17)	83 (3.27)	40 (1.58)	90 (3.54)	8.5 (0.34)	90 l/min 24 gpm	150 l/min 40 gpm	G 3/4	2.5 (5.5)
40 (1.58)	110 (4.33)	10 (0.39)	37 (1.46)	45 (1.77)	108 (4.25)	130 (5.12)	6 (0.24)	38 (1.5)	42 (1.65)	64 (2.52)	40 (1.58)	70 (2.76)	6.5 (0.26)	55 l/min 15 gpm	90 l/min 24 gpm	G 1/2	1.3 (2.87)
40 (1.58)	110 (4.33)	10 (0.39)	37 (1.46)	45 (1.77)	108 (4.25)	130 (5.12)	6 (0.24)	38 (1.5)	42 (1.65)	64 (2.52)	40 (1.58)	70 (2.76)	6.5 (0.26)	30 l/min 8 gpm	55 l/min 15 gpm	G 3/8	1.3 (2.87)
S	L5	L4	L3	L2	L1	L	l1	l	H3	H2	H1	H	F	QP	QE	Y	Weight kg (lbs)

Flow regulator
3 way, combination type
pressure compensated

A-VRFC3C

0M.D2.03 - X - Y

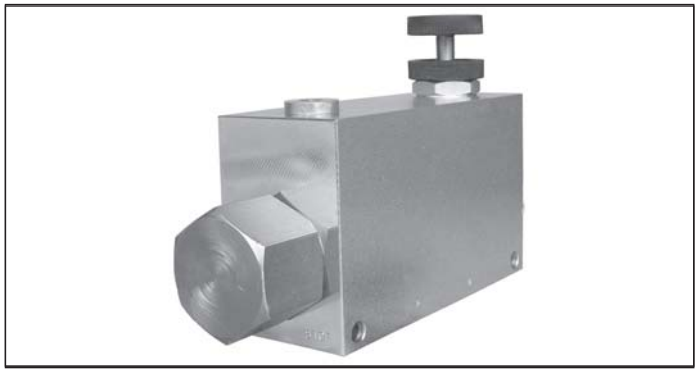

Description

A constant priority flow, regardless of system pressures, is established from E to P, while a minimum pressure differential of appr. 5 bar (70 psi) exists between the two ports. While the regulated priority flow from P is used in the priority circuit, the flow supplied to E in excess of priority is by-passed to B port and can be sent to power other actuators. Priority flow can be varied from closed to the nominal maximum rating of the valve. Reverse flow from P to E is limited by the selected opening of the restrictor and is not pressure compensated. Reverse flow from B is not permitted.

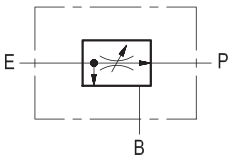

Technical data

Max operating pressure	350 bar (5000 psi)
QE= max. inlet flow “E” port (see “Dimensions”)	
QP= max. regulated flow “P” port (see “Dimensions”)	
Flow range adjustment	0 - 3 turns
Weight	see “Dimensions”
Manifold material	Zinc plated steel
Fluid	Mineral oil (HL, HLP) according DIN 51524
Fluid temperature range	-30 °C to 100 (-22 to 212 °F)
Viscosity range	5 to 800 mm^2/s (cSt)
Recommended degree of fluid contamination	Class 19/17/14 according to ISO 4406
Other technical data	see data sheet 18350-50

Note: for applications outside these parameters, please consult us.

Characteristic curve

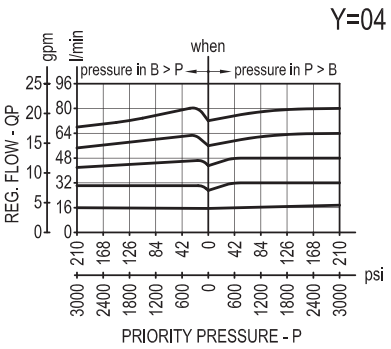

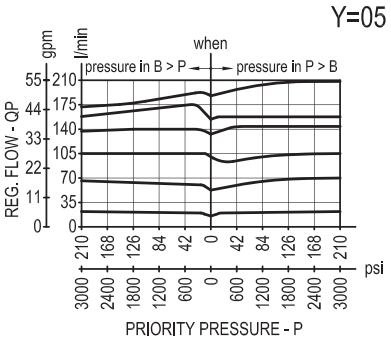

RE 18300-51/03.2013 Bosch Rexroth AG Control Systems

Dimensions [mm (inches)]

Ordering code

0M.D2.03	X	Y

Flow regulator
3 way, combination type
pressure compensated

Adjustments

70 Handknob and locknut

Port sizes	E - B - P
04	G 3/4
05	G 1

Preferred types

Type	Material number
0MD203700400000	R930004488
0MD203700500000	R930004490

Type	Material number

Dimensions

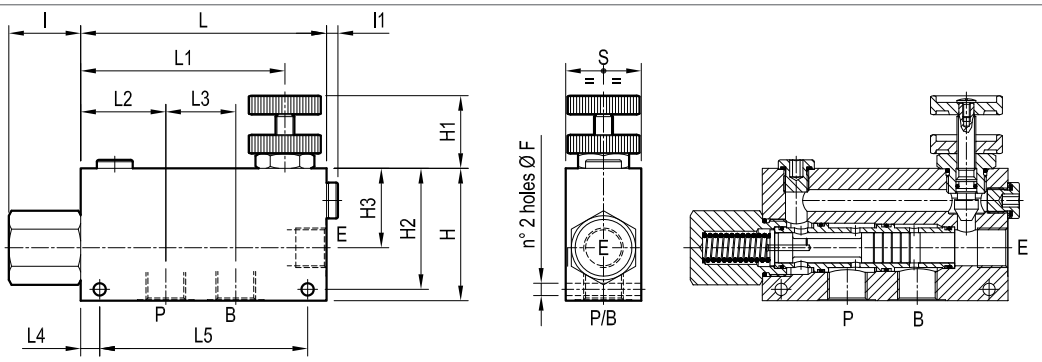

70 (2.76)	130 (5.12)	10 (0.39)	56.5 (2.22)	48 (1.89)	122.5 (4.82)	150 (5.91)	6 (0.24)	38 (1.5)	65 (2.56)	120 (4.72)	40 (1.58)	130 (5.12)	8.5 (0.34)	190 l/min 50 gpm	380 l/min 100 gpm	G 1	9.9 (21.8)
50 (1.97)	135 (5.32)	10 (0.39)	44 (1.73)	54 (2.13)	130 (5.12)	155 (6.1)	6 (0.24)	38 (1.5)	55 (2.17)	83 (3.27)	40 (1.58)	90 (3.54)	8.5 (0.34)	90 l/min 24 gpm	150 l/min 40 gpm	G 3/4	5.4 (11.9)
S	L5	L4	L3	L2	L1	L	l1	l	H3	H2	H1	H	F	QP	QE	Y	Weight kg (lbs)

Flow regulator
3 way, combination type
pressure compensated

VRFC3C

0M.42.03.50 - Y

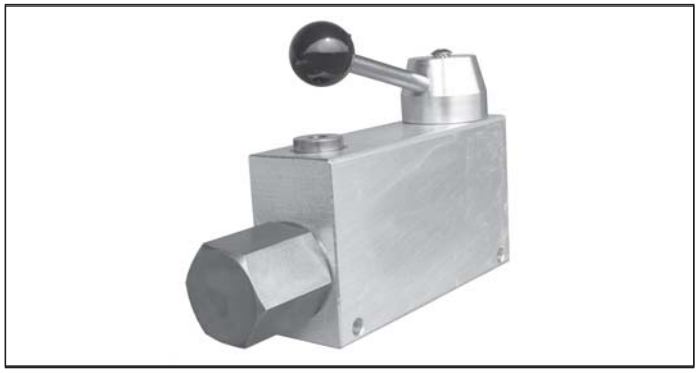

Technical data

Operating pressure	210 bar (3000 psi)
QE= max. inlet flow “E” port (see “Dimensions”)	
QP= max. regulated flow “P” port (see “Dimensions”)	
Weight	see “Dimensions”
Manifold material	Aluminium
Note: aluminium bodies are often strong enough for operating pressures exceeding 210 bar (3000 psi), depending from the fatigue life expected in the specific application. If in doubt, consult our Service Network.	
Fluid	Mineral oil (HL, HLP) according DIN 51524
Fluid temperature range	-30 °C to 100 (-22 to 212 °F)
Viscosity range	5 to 800 mm^2/s (cSt)
Recommended degree of fluid contamination	Class 19/17/14 according to ISO 4406
Other technical data	see data sheet 18350-50

Note: for applications outside these parameters, please consult us.

Description

A constant priority flow, regardless of system pressures, is established from E to P, while a minimum pressure differential of appr. 5 bar (70 psi) exists between the two ports. While the regulated priority flow from P is used in the priority circuit, the flow supplied to E in excess of priority is by-passed to port B and can be sent to power other actuators. Priority flow can be varied from zero (Closed) to the nominal maximum rating for the valve (Open). Reverse flow from P to E is limited by the selected opening of the restrictor and is not pressure compensated. Reverse flow from B is not permitted.

Characteristic curve

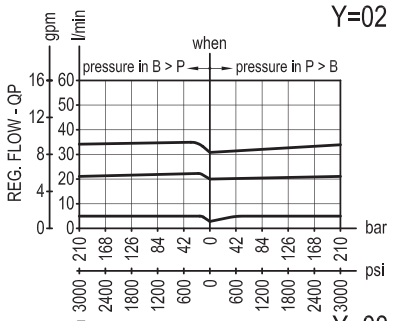

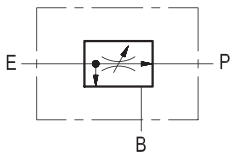

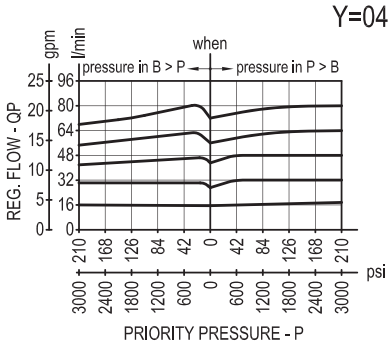

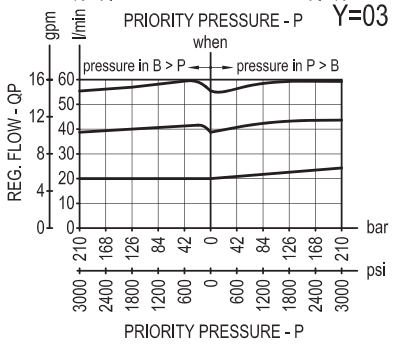

Ordering code

0M.42.03	50	Y

Flow regulator
3 way, combination type
pressure compensated

Adjustments

Lever with built in friction clutch

Port sizes	E - B - P
02	G 3/8
03	G 1/2
04	G 3/4

Preferred types

Type	Material number
0M4203500200000A	R930000033
0M4203500300000	R930004322
0M4203500400000	R930004323

Type	Material number

Dimensions

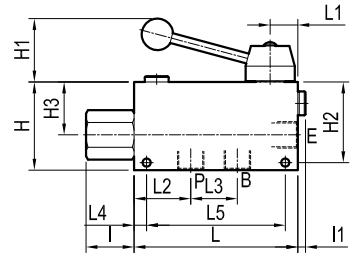

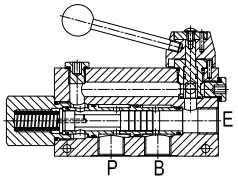

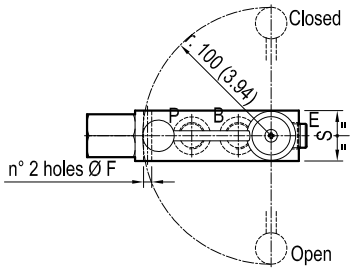

50 (1.97)	135 (5.32)	10 (0.39)	44 (1.73)	54 (2.13)	25 (0.98)	155 (6.1)	6 (0.24)	38 (1.5)	55 (2.17)	83 (3.27)	50 (1.97)	90 (3.54)	8.5 (0.34)	90 l/min 24 gpm	150 l/min 40 gpm	G 3/4	2.6 (5.7)
40 (1.58)	110 (4.33)	10 (0.39)	37 (1.46)	45 (1.77)	22 (0.87)	130 (5.12)	6 (0.24)	38 (1.5)	42 (1.65)	64 (2.52)	50 (1.97)	70 (2.76)	6.5 (0.26)	55 l/min 15 gpm	90 l/min 24 gpm	G 1/2	1.4 (3.1)
40 (1.58)	110 (4.33)	10 (0.39)	37 (1.46)	45 (1.77)	22 (0.87)	130 (5.12)	6 (0.24)	38 (1.5)	42 (1.65)	64 (2.52)	50 (1.97)	70 (2.76)	6.5 (0.26)	30 l/min 8 gpm	55 l/min 15 gpm	G 3/8	1.4 (3.1)
S	L5	L4	L3	L2	L1	L	I1	I	H3	H2	H1	H	F	QP	QE	Y	Weight kg (lbs)

3-Way heavy duty flow control, with pressure compensated and solenoid controlled priority flow

A-VRFC3C-VEI-VS 0M.43.20.80 - Y - Z

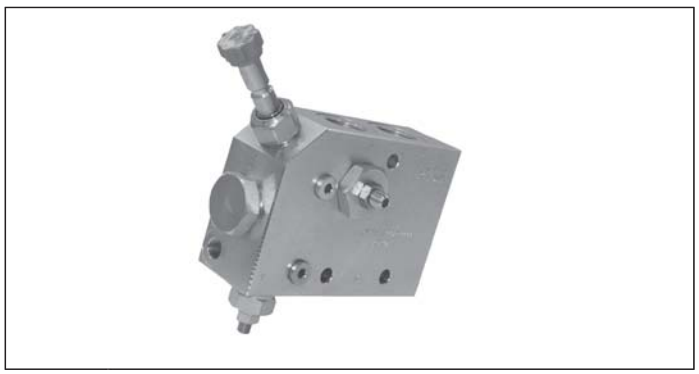

Technical data

Max. operating pressure	350 bar (5000 psi)
Max. priority line pressure: limited by relief valve (6). See “priority pressure range”	
Back pressure at T port	max. 1.5 bar (20 psi)
Drain from T, with solenoid valve non-energized	up to 1.5 l/min. (0.4 gpm)
Weight	See “Dimensions”
Manifold material	Zinc plated steel
Fluid	Mineral oil (HL, HLP) according DIN 51524
Fluid temperature range	-20 °C to 80 (-4 to 176 °F)
Viscosity range	20 to 380 mm^2/s (cSt)
Recommended degree of fluid contamination	Class 19/17/14 according to ISO 4406
Other technical data	see data sheet 18350-50

Note: for applications outside these parameters, please consult us.

Description

The flow control valves series “A-VRFC3C-VEI-VS” are 3 way, with one inlet “P” and two outlets “A” and “B”, the first outlet “A” being priority, pressure compensated type, with pressure relief valve and available on demand through a solenoid cartridge; the second outlet “B” is the by-pass for all flow in excess of what demanded by priority. Both flows from “A” and “B” ports can be employed to power different functions of the machine. These valves provide a simple and efficient way to power hydraulic tools (such as hydraulic hammers) from the existing hydraulic system, without any need to modify the directional control valve.
They allow the simultaneous operations, independently from the respective working pressures, of both the hydraulic actuator powered by the priority outlet “A”, and of the normal functions of the machine (traction, slewing, cylinder motions, etc.) supplied by the main directional valve through the by-pass outlet “B”.

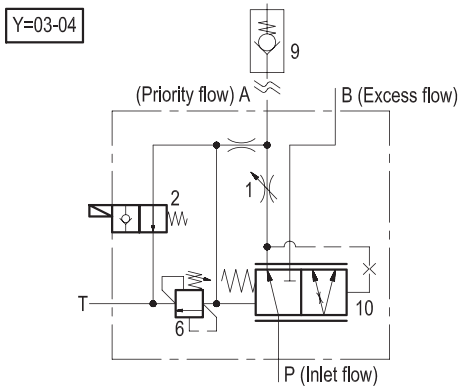

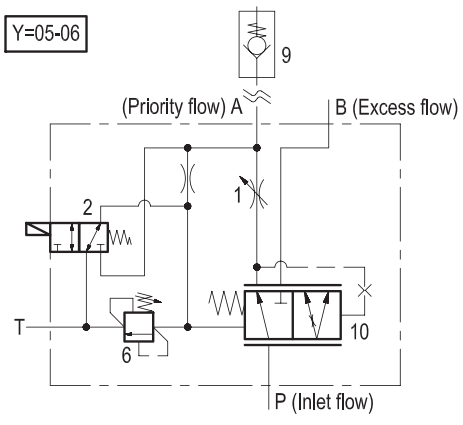

RE 18300-53/06.2013 Bosch Rexroth AG Control Valves

Ordering code

0M.43.20.80	Y	Z

3-Way heavy duty flow control, with pressure compensated and solenoid controlled priority flow

	Priority pressure range		
	Adj. pressure range bar (psi)	Pres. increase bar/turn (psi/turn)	Std. setting Q=5 (l/min.) bar (psi)
= 20	50-210 (725-3000)	48 (696)	200 (2900)
= 35	100-350 (1450-5000)	95 (1378)	350 (5000)

	Port sizes		Inlet flow (max)	Regulated priority flow	
	P-A-B	T	l/min (gpm)	l/min (gpm) max	l/min (gpm) per turn
= 03	G 1/2	G 1/4	100 (26)	85 (23)	approx. 18 (4.8)
= 04	G 3/4	G 1/4	200 (53)	140 (37)	approx. 20 (5.3)
= 05	G 1	G 1/4	300 (79)	220 (58)	approx. 26 (6.9)
= 06	G 1-1/4	G 1/4	400 (106)	300 (80)	approx. 28 (7.4)

Tamper resistant cap
ordering code 11.04.23.002
Mat. no. R930000752

Preferred types

Type	Material number
0M432080032000C	R930004377
0M432080033500C	R930004378
0M432080042000D	R930000028
0M4320800435000	R930006085
0M432080052000D	R930004383
0M432080053500A	R930006086
0M432080062000D	R930004385

Type	Material number
0M4320800635000	R930000353

Characteristic curves

	Priority flow vs pressure	By-pass line pressure drop
Version	Y = 03 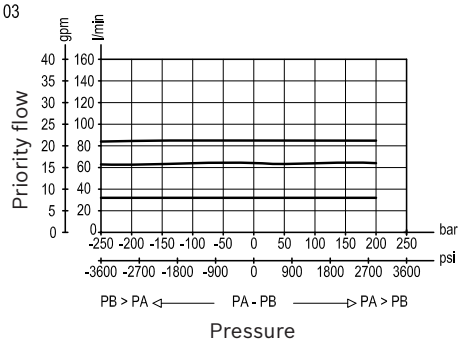	Y = 03 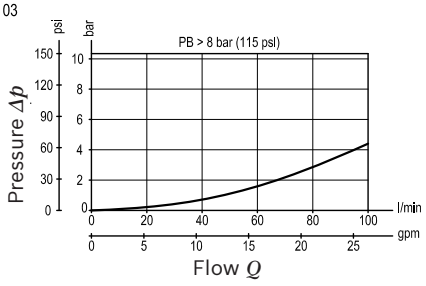
Version	Y = 04 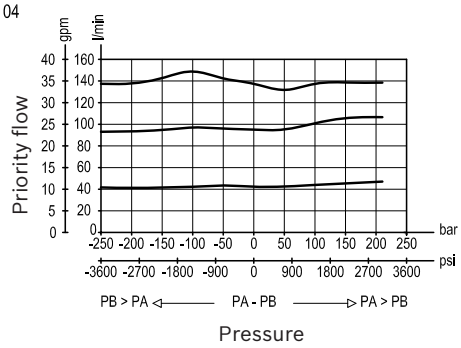	Y = 04 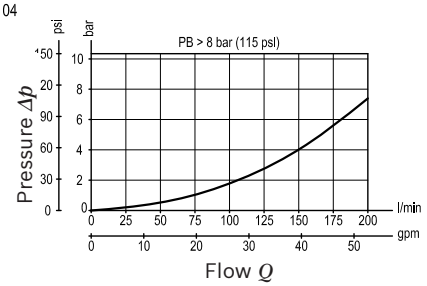
Version	Y = 05 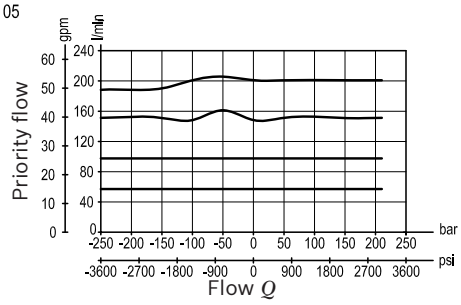	Y = 05 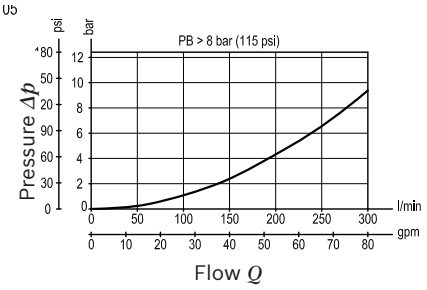
Version	Y = 06 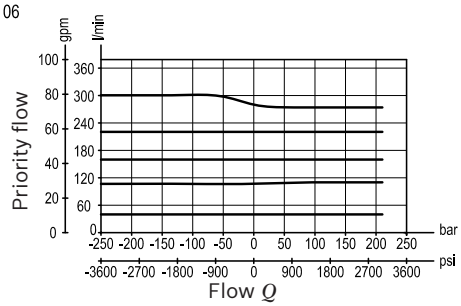	Y = 06 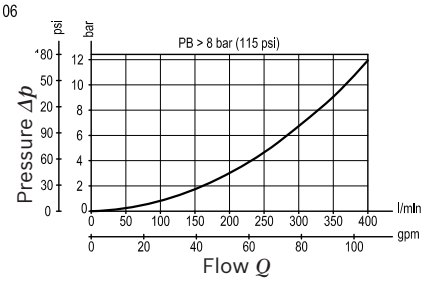

Dimensions

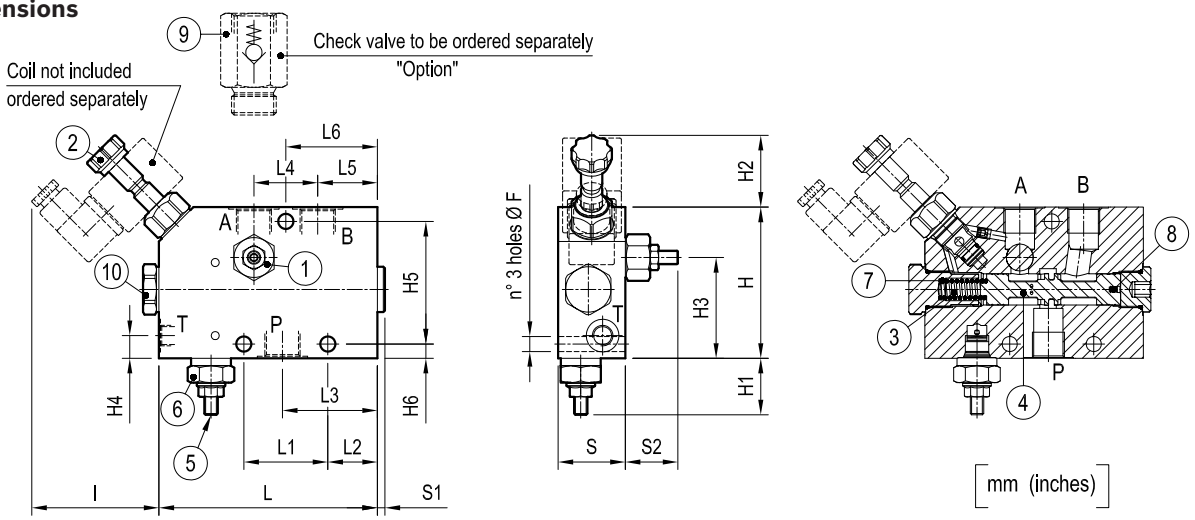

32 (1.26)	5 (0.2)	70 (2.76)	86 (3.39)	54.5 (2.15)	62.5 (2.46)	88.5 (3.48)	48 (1.89)	76 (2.99)	190 (7.48)	68 (2.68)	18 (0.71)	90 (3.54)	14 (0.55)	92 (3.62)	41 (1.61)	34 (1.34)	130 (5.12)	9 (0.35)	G 1-1/4	12.5 (27.5)
32 (1.26)	5 (0.2)	60 (2.36)	74.5 (2.93)	46.5 (1.83)	56.5 (2.22)	78 (3.07)	36.5 (1.44)	76 (2.99)	173 (6.81)	68 (2.68)	15 (0.59)	90 (3.54)	13.5 (0.53)	80.5 (3.17)	41 (1.61)	34 (1.34)	120 (4.72)	9 (0.35)	G 1	9 (19.8)
32 (1.26)	5 (0.2)	50 (1.97)	59 (2.32)	37 (1.46)	44 (1.73)	61 (2.4)	34 (1.34)	50 (1.97)	140 (5.51)	73 (2.87)	13.5 (0.53)	73 (2.87)	13 (0.51)	69.5 (2.74)	41 (1.61)	34 (1.34)	100 (3.94)	9 (0.35)	G 3/4	4.8 (10.6)
32 (1.26)	5 (0.2)	40 (1.58)	54.5 (2.15)	35.5 (1.4)	38 (1.5)	56.5 (2.22)	29.5 (1.16)	50 (1.97)	130 (5.12)	76 (2.99)	8.5 (0.34)	73 (2.87)	12.5 (0.49)	60 (2.36)	41 (1.61)	34 (1.34)	90 (3.54)	8.5 (0.34)	G 1/2	3.4 (7.5)
S2	S1	S	L6	L5	L4	L3	L2	L1	L	I	H6	H5	H4	H3	H2	H1	H	F	Port sizes	Weight kg (lbs)

Fitting and connections

When positioning and tightening the valve, avoid any deflection of the body which could prevent the internal spool from sliding freely and impair the metering performance; it is recommended to use the 3 available fixation holes as locating points and to fit 3 equal spacers (metal washers), one on each point, between the valve body and the supporting structure.
Connections to the hydraulic system:

- Port “P” (inlet) to the main line from the pump.
- Port “A” (priority outlet) to the line feeding the hydraulic hammer, or the attachment. Important: for the correct metering of the compensating spool the priority outlet shall be always pressurized, with a back-pressure of at least 8-9 bar (115-130 psi); if necessary, fit a check valve with the needed cracking pressure.
- Port “B” (by-pass, or excess flow outlet) to the line delivering the oil to the main directional valve.
- Port “T” to a tank line. It is absolutely necessary that port “T” is connected to a low pressure tank line, 1-1.5 bar max (15-22 psi max).

Sleeve type check valves

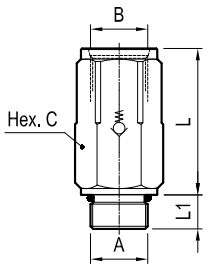

Port sizes A - B	Cracking pressure bar (psi)	Dimensions mm (inches)			Ordering code
		C	L	L1	
G 1/2	8 (115)	30 (1.18)	57 (2.24)	14 (0.55)	043117000301000 R930000444
G 3/4	8 (115)	36 (1.42)	69 (2.72)	16 (0.63)	043117000401000 R930000445
G 1	8 (115)	46 (1.81)	82 (3.23)	18 (0.71)	043117000501000 R930000446
G 1 1/4	8 (115)	55 (2.17)	102 (4.02)	20 (0.79)	043117000601000 R930000447

Adjustment of priority flow

The volume of priority flow from port “A” can be easily modified by turning the screw (1): the flow increases by turning the screw clockwise and, once adjusted to the desired level, it remains constant independently from the working pressure.

Adjustment of maximum priority pressure

The maximum pressure in the priority line “A” can be adjusted by turning the screw (5) of the small relief cartridge (6) which controls the maximum pressure in the chamber (3): when this “pilot” cartridge opens, the pressure in chamber (3) drops and the priority flow is stopped.
Note: the relief cartridge (6) controls only the maximum pressure in the priority outlet “A”, and does not control the pressure in the by-pass and main line: the main line must be protected by another relief valve, capable to discharge the full oil flow.

Ordering code: **OD.02.17 - X - Y - Z**

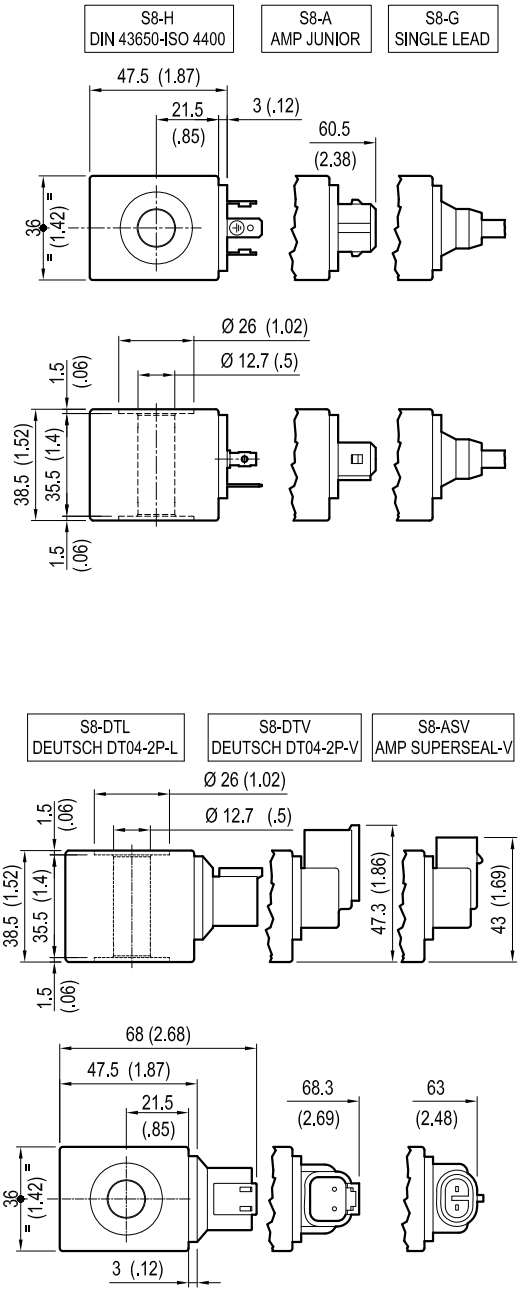

COILS

Attention: indicated coils fit every hammer valve versions

TECHNICAL DATA
Weight: 0.180 kg (0.4 lbs)
Encapsulating material: IXEF
Heat insulation Class H: 180°C (356°F)
Ambient temperature range: -30/+60°C (-86/+140°F)
Inlet voltage fluctuations must not exceed ±10% of nominal voltage to obtain correct operation and long life coils.

X	Y	Connections	Circuit	Voltage
01	30	DIN 43650 - ISO 4400	Standard	DC-RAC
07	30	AMP JUNIOR	Standard	DC only
0G	03	SINGLE LEAD	Standard	DC only *
14	30	DIN 43650 - ISO 4400	Bidirectionl Diode	DC only
15	30	AMP JUNIOR	Bidirectional Diode	DC only
0H	03	SINGLE LEAD	Bidirectional Diode	DC only *

* Length 300mm (11.8 inches). Ext. diameter 6.3mm (0.25 inches). External and internal Shealth Silicone rubber.

Z	Voltage V	Resistance Ohm (±7%)	Power W	Current A		ΔT °C (°F)
	Nominal	Ta = 20-25°C (68-77°F)	Cold coil	Cold coil	Hot coil	1 hour energized at Ta=20-25°C (68-77°F) Nominal voltage
OB	12 DC	7.4	20	1.62	1.19	105-110 (221-230)
OC	24 DC	28.5	20	0.85	0.61	
OG	14 DC		20			
AC	26 DC	34.3	20	0.76	0.54	

X	Y	Connections	Circuit	Voltage
20	30	DEUTSCH DT04-2P-L	Standard	DC only
20	3P	DEUTSCH DT04-2P-V	Standard	DC only
30	3P	AMP SUPERSEAL-V	Standard	DC only
22	30	DEUTSCH DT04-2P-L	Bidirectionl Diode	DC only
22	3P	DEUTSCH DT04-2P-V	Bidirectional Diode	DC only
32	3P	AMP SUPERSEAL-V	Bidirectional Diode	DC only

Z	Voltage V	Resistance Ohm (±7%)	Power W	Current A		ΔT °C (°F)
	Nominal	Ta = 20-25°C (68-77°F)	Cold coil	Cold coil	Hot coil	1 hour energized at Ta=20-25°C (68-77°F) Nominal voltage
OB	12 DC	7.4	20	1.62	1.19	105-110 (221-230)
OC	24 DC	28.5	20	0.85	0.61	
AC	26 DC	34.3	20	0.76	0.54	

Protection IP69 - DIN 40050 part 9
These coils have passed the THERMAL SHOCK DUNK TEST

Note: Please refer to data sheet RE 18325-90 for coils and connectors readily available and for further details.

SPARE PARTS

SOLENOID CARTRIDGE	
Port size	Ordering code
0M.43.20.80.03.20	OD1502181AS000 R901091102
0M.43.20.80.03.35	
0M.43.20.80.04.20	
0M.43.20.80.04.35	
0M.43.20.80.05.20	OD132067390000 R934000629
0M.43.20.80.05.35	
0M.43.20.80.06.20	
0M.43.20.80.06.35	

RELIEF CARTRIDGE	
Port size	Ordering code
0M.43.20.80.03.20	041148035620000 R901104097
0M.43.20.80.04.20	
0M.43.20.80.05.20	
0M.43.20.80.06.20	
0M.43.20.80.03.35	041148035635000 R901104099
0M.43.20.80.04.35	
0M.43.20.80.05.35	
0M.43.20.80.06.35	

Dimensions [mm (inches)]

5-Way heavy duty flow control, with pressure compensated and solenoid controlled priority flow, for two pumps systems

A-VRFC3C-VEI-VS

0M.43.12.80 - Y - Z

Technical data

Max. operating pressure	350 bar (5000 psi)
Max. priority line pressure: limited by relief valve (6). See “priority pressure range”	
Back pressure at T port	max. 1.5 bar (20 psi)
Drain from T, with solenoid valve non-energized	up to 1.5 l/min. (0.4 gpm)
Weight	See “Dimensions”
Manifold material	Zinc plated steel
Fluid	Mineral oil (HL, HLP) according DIN 51524
Fluid temperature range	-20 °C to 80 (-4 to 176 °F)
Viscosity range	20 to 380 mm^2/s (cSt)
Recommended degree of fluid contamination	Class 19/17/14 according to ISO 4406
Other technical data	see data sheet 18350-50

Note: for applications outside these parameters, please consult us.

Description

The flow control valves code 0M.43.12.80 are 3 way, with two separate inlets P1 and P2 and three outlets “A” and “B1” and “B2”, the first outlet “A” being priority, pressure compensated type, with pressure relief valve, and available on demand through a solenoid cartridge; the second and third outlets “B1” and “B2” are the by-pass for all flow in excess of what demanded by priority. All flows from “A”, “B1” and “B2” ports can be employed to power different functions of the machine. These valves provide a simple and efficient way to power hydraulic tools (such as hydraulic hammers) from the existing hydraulic system, without any need to modify the directional control valve. They allow the simultaneous operations, independently from the respective working pressures, of both the hydraulic actuator powered by the priority outlet “A”, and of the normal functions of the machine (traction, slewing, cylinder motions, etc.) supplied by the main directional valve through the by-pass outlet “B1” and “B2”.

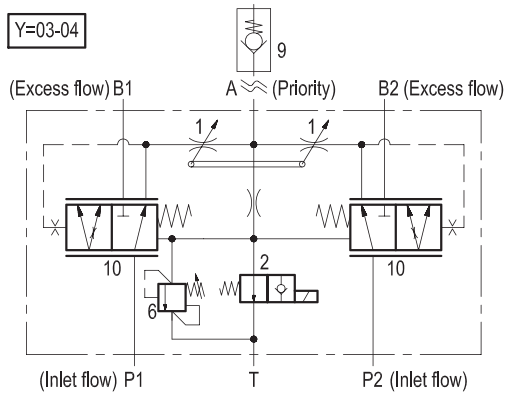

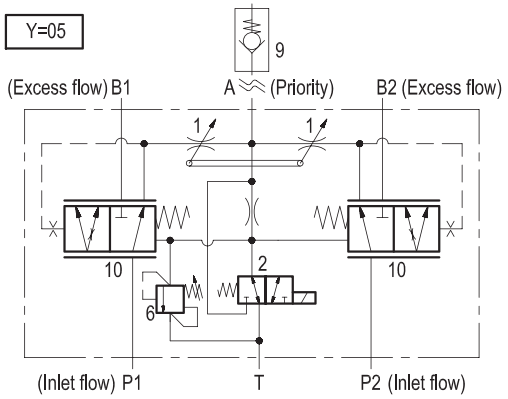

Ordering code

0M.43.12.80	Y	Z

5-Way heavy duty flow control,
with pressure compensated and solenoid controlled
priority flow, for two pumps systems

	Priority pressure range		
	Adj. pressure range bar (psi)	Pres. increase bar/turn (psi/turn)	Std. setting Q=5 (l/min.) bar (psi)
20	50-210 (725-3000)	48 (696)	200 (2900)
35	100-350 (1450-5000)	95 (1378)	350 (5000)

	Port sizes			Inlet flow (max)		Regulated priority flow	
	P1-P2 B1-B2	A	T	l/min (gpm)		l/min (gpm) max	l/min (gpm) per turn
				P1	P2		
03	G 1/2	G 3/4	G 1/4	100 (26)	100 (26)	150 (40)	approx. 32 (8.45)
04	G 3/4	G 1	G 1/4	200 (53)	200 (53)	250 (65)	approx. 35 (9.25)
05	G 1	G 1-1/4	G 1/4	300 (79)	300 (79)	390 (103)	approx. 46 (12.15)

Preferred types

Type	Material number
0M431280032000C	R930004361
0M4312800335000	R930000354
0M431280042000C	R930004362
0M4312800435000	R930000355
0M431280052000D	R930004363
0M4312800535000	R930000366

Type	Material number

Characteristic curves

	Priority flow vs pressure	By-pass line pressure drop
Version	Y = 03 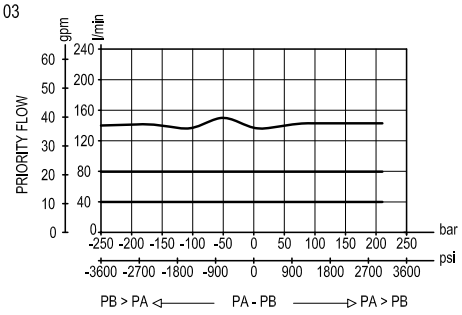	Y = 03 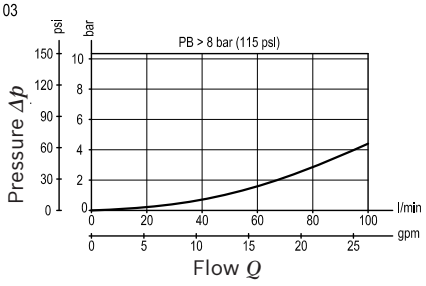
Version	Y = 04 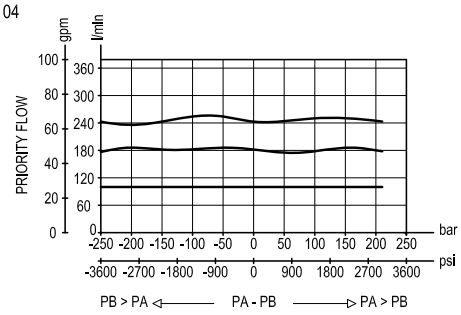	Y = 04 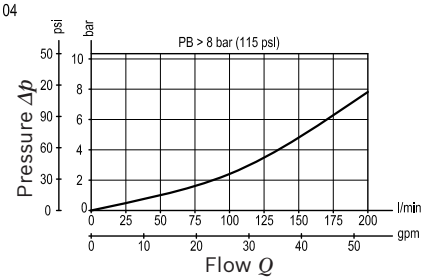
Version	Y = 05 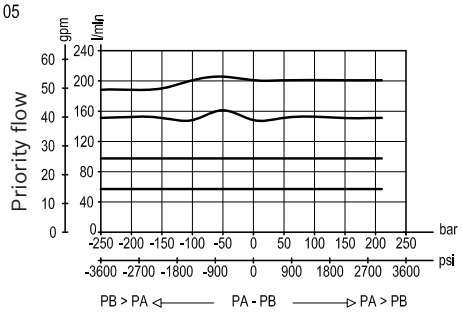	Y = 05 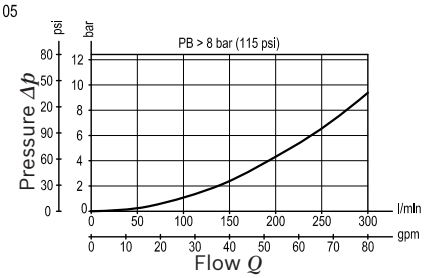

RE 18309-54/03.2016 Bosch Rexroth Oil Control S.p.A.

375

Dimensions

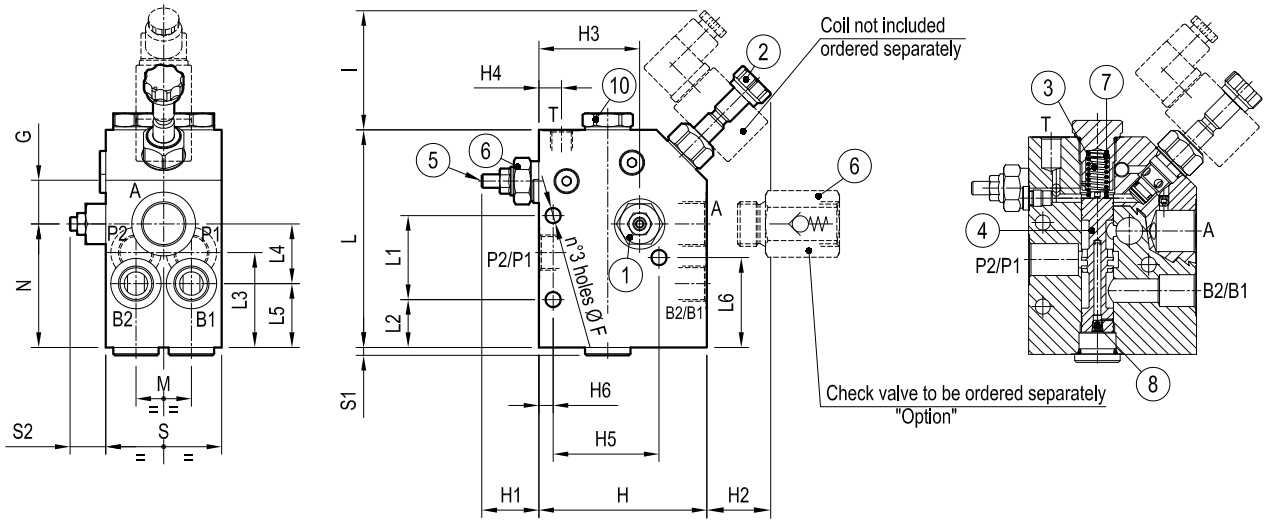

21 (0.83)	4.5 (0.18)	109 (4.29)	70.5 (2.78)	42 (1.65)	61 (2.4)	78 (3.07)	32.5 (1.28)	76 (2.99)	173 (6.81)	73 (2.87)	14.5 (0.57)	90 (3.54)	16.5 (0.65)	80 (3.15)	38 (1.5)	34 (1.34)	139 (5.47)	9 (0.35)	41 (1.61)	56 (2.21)	103 (4.06)	G 1	18 (39.7)
21 (0.83)	4.5 (0.18)	89 (3.5)	59 (2.32)	34 (1.34)	47 (1.85)	61 (2.4)	34 (1.34)	50 (1.97)	140 (5.51)	73 (2.87)	17.5 (0.69)	73 (2.87)	16.5 (0.65)	73.5 (2.89)	38 (1.5)	34 (1.34)	124 (4.88)	9 (0.35)	29 (1.14)	46 (1.81)	81 (3.19)	G 3/4	10.7 (23.6)
21 (0.83)	4.5 (0.18)	69 (2.72)	53.5 (2.11)	38 (1.5)	35.5 (1.4)	56.5 (2.22)	28.5 (1.12)	50 (1.97)	129.5 (5.1)	73 (2.87)	8.5 (0.34)	63 (2.48)	13.5 (0.53)	60 (2.36)	38 (1.5)	34 (1.34)	100 (3.94)	9 (0.35)	26 (1.02)	33 (1.3)	73.5 (2.89)	G 1/2	6.5 (14.3)
S2	S1	S	L6	L5	L4	L3	L2	L1	L	I	H6	H5	H4	H3	H2	H1	H	F	G	M	N	Port sizes	Weight kg (lbs)

Fitting and connections

- When positioning and tightening the valve, avoid any deflection of the body which could prevent the internal spool from sliding freely and impair the metering performance; it is recommended to use the 3 available fixation holes as locating points and to fit 3 equal spacers (metal washers), one on each point, between the valve body and the supporting structure.

Connections to the hydraulic system:

- Port “P1” and “P2” (inlets) to the main line from the pumps.
- Port “A” (priority outlet) to the line feeding the hydraulic hammer, or the attachment. Important: for the correct metering of the compensating spool the priority outlet shall be always pressurized, with a back-pressure of at least 8-9 bar (115-130 psi); if necessary, fit a check valve with the needed cracking pressure.
- Port “B1” and “B2” (by-pass, or excess flow outlet) to the lines delivering the oil to the main directional valve.
- Port “T” to a tank line. It is absolutely necessary that port “T” is connected to a low pressure tank line, 1-1.5 bar max (15-22 psi max).

Sleeve type check valves

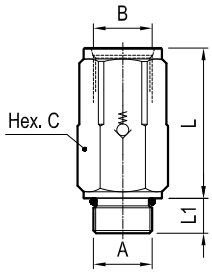

Port sizes A - B	Cracking pressure bar (psi)	Dimensions mm (inches)			Ordering code
		C	L	L1	
G 1/2	8 (115)	30 (1.18)	57 (2.24)	14 (0.55)	043117000301000 R930000444
G 3/4	8 (115)	36 (1.42)	69 (2.72)	16 (0.63)	043117000401000 R930000445
G 1	8 (115)	46 (1.81)	82 (3.23)	18 (0.71)	043117000501000 R930000446

Adjustment of priority flow

The volume of priority flow from port “A” can be easily modified by turning the screw (1): the flow increases by turning the screw counter-clockwise and, once adjusted to the desired level, it remains constant independently from the working pressure.

Adjustment of maximum priority pressure

The maximum pressure in the priority line “A” can be adjusted by turning the screw (5) of the small relief cartridge (6) which controls the maximum pressure in the chamber (3): when this “pilot” cartridge opens, the pressure in chamber (3) drops and the priority flow is stopped. Note: the relief cartridge (6) controls only the maximum pressure in the priority outlet “A”, and does not control the pressure in the by-pass and main line: the main line must be protected by another relief valve, capable to discharge the full oil flow.

Ordering code: **OD.02.17 - X - Y - Z**

COILS

Attention: indicated coils fit every hammer valve versions

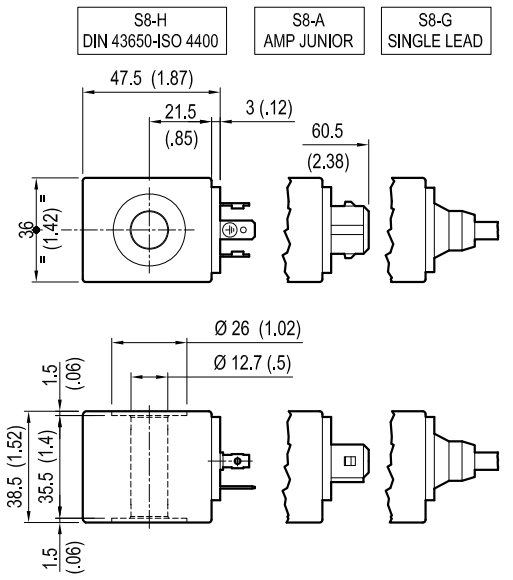

TECHNICAL DATA
Weight: 0.180 kg (0.4 lbs)
Encapsulating material: IXEF
Heat insulation Class H: 180°C (356°F)
Ambient temperature range: -30/+60°C (-86/+140°F)
Inlet voltage fluctuations must not exceed ±10% of nominal voltage to obtain correct operation and long life coils.

X	Y	Connections	Circuit	Voltage
01	30	DIN 43650 - ISO 4400	Standard	DC-RAC
07	30	AMP JUNIOR	Standard	DC only
0G	03	SINGLE LEAD	Standard	DC only *
14	30	DIN 43650 - ISO 4400	Bidirectionl Diode	DC only
15	30	AMP JUNIOR	Bidirectional Diode	DC only
0H	03	SINGLE LEAD	Bidirectional Diode	DC only *

* Length 300mm (11.8 inches). Ext. diameter 6.3mm (0.25 inches). External and internal Shealth Silicone rubber.

Z	Voltage V	Resistance Ohm (±7%)	Power W	Current A		ΔT °C (°F)
	Nominal	Ta = 20-25°C (68-77°F)	Cold coil	Cold coil	Hot coil	1 hour energized at Ta=20-25°C (68-77°F) Nominal voltage
OB	12 DC	7.4	20	1.62	1.19	105-110 (221-230)
OC	24 DC	28.5	20	0.85	0.61	
OG	14 DC		20			
AC	26 DC	34.3	20	0.76	0.54	

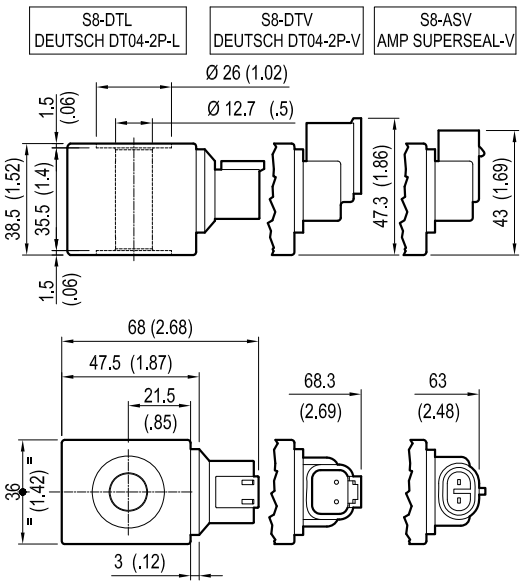

X	Y	Connections	Circuit	Voltage
20	30	DEUTSCH DT04-2P-L	Standard	DC only
20	3P	DEUTSCH DT04-2P-V	Standard	DC only
30	3P	AMP SUPERSEAL-V	Standard	DC only
22	30	DEUTSCH DT04-2P-L	Bidirectionl Diode	DC only
22	3P	DEUTSCH DT04-2P-V	Bidirectional Diode	DC only
32	3P	AMP SUPERSEAL-V	Bidirectional Diode	DC only

Z	Voltage V	Resistance Ohm (±7%)	Power W	Current A		ΔT °C (°F)
	Nominal	Ta = 20-25°C (68-77°F)	Cold coil	Cold coil	Hot coil	1 hour energized at Ta=20-25°C (68-77°F) Nominal voltage
OB	12 DC	7.4	20	1.62	1.19	105-110 (221-230)
OC	24 DC	28.5	20	0.85	0.61	
AC	26 DC	34.3	20	0.76	0.54	

Protection IP69 - DIN 40050 part 9
These coils have passed the THERMAL SHOCK DUNK TEST

Note: Please refer to data sheet RE 18325-90 for coils and connectors readily available and for further details.

SPARE PARTS

SOLENOID CARTRIDGE	
Port size	Ordering code
0M.43.12.80.03.20	OD1502181AS000 R901091102
0M.43.12.80.03.35	
0M.43.12.80.04.20	
0M.43.12.80.04.35	
0M.43.12.80.05.20	OD132067390000 R934000629

RELIEF CARTRIDGE	
Port size	Ordering code
0M.43.12.80.03.20	041148035620000 R901104097
0M.43.12.80.04.20	
0M.43.12.80.05.20	
0M.43.12.80.03.35	041148035635000 R901104099
0M.43.12.80.04.35	
0M.43.12.80.05.35	

Dimensions [mm (inches)]

3-Way heavy duty flow control, with pressure compensated, solenoid and load sensing controlled priority flow

A-VRFC3C-VEI-VS-LS 0M.43.21.80 - Y - Z

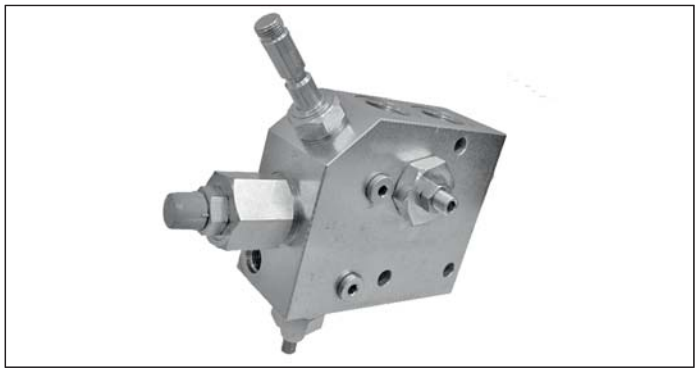

Description

The flow control valves series “A-VRFC3C-VEI-VS” are 3 way, with one inlet “P” and two outlets “A” and “B”, the first outlet “A” being priority, pressure compensated type, with pressure relief valve and available on demand through a solenoid cartridge; the second outlet “B” is the by-pass for all flow in excess of what demanded by priority. Both flows from “A” and “B” ports can be employed to power different functions of the machine. A pressure signal “LS” from the valve is delivered to the load sensing circuit to increase the pump flow in order to match the requirement. These valves provide a simple and efficient way to power hydraulic tools (such as hydraulic hammers) from the existing hydraulic system, without any need to modify the directional control valve. They allow the simultaneous operations, independently from the respective working pressures, of both the hydraulic actuator powered by the priority outlet “A”, and of the normal functions of the machine (traction, slewing, cylinder motions, etc.) supplied by the main directional valve through the by-pass outlet “B”.

Technical data

Max. operating pressure	350 bar (5000 psi)
Max. priority line pressure: limited by relief valve (6). See “priority pressure range”	
Back pressure at T port	max. 1.5 bar (20 psi)
Drain from T, with solenoid valve non-energized	up to 1.5 l/min. (0.4 gpm)
Weight	See “Dimensions”
Manifold material	Zinc plated steel
Fluid	Mineral oil (HL, HLP) according DIN 51524
Fluid temperature range	-20 °C to 80 (-4 to 176 °F)
Viscosity range	20 to 380 mm^2/s (cSt)
Recommended degree of fluid contamination	Class 19/17/14 according to ISO 4406
Other technical data	see data sheet 18350-50

Note: for applications outside these parameters, please consult us.

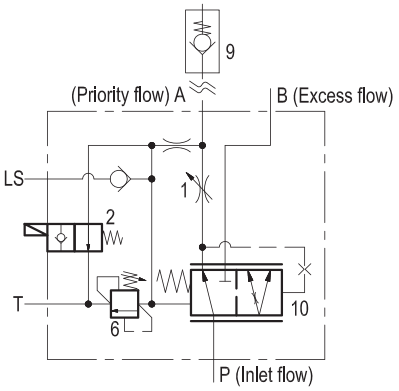

Ordering code

0M.43.21.80	Y	Z

3-Way heavy duty flow control,
with pressure compensated, solenoid and
load sensing controlled priority flow

	Priority pressure range		
	Adj. pressure range bar (psi)	Pres. increase bar/turn (psi/turn)	Std. setting Q=5 (l/min.) bar (psi)
20	50-210 (725-3000)	48 (696)	200 (2900)
35	100-350 (1450-5000)	95 (1378)	350 (5000)

	Port sizes		Regulated priority flow	
	P - A	T - LS	l/min (gpm) max	l/min (gpm) per turn
57	1 1/6-12 UN-2B	9/16-18 UNF	140 (37)	approx. 20 (5.3)

Preferred types

Type	Material number
0M4321805720000	R930005433
0M4321805735000	R930001968

Type	Material number

Characteristic curves

	Priority flow vs pressure	By-pass line pressure drop
Version	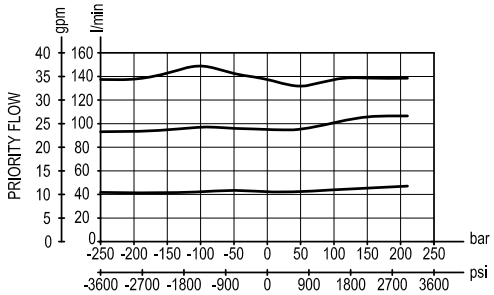	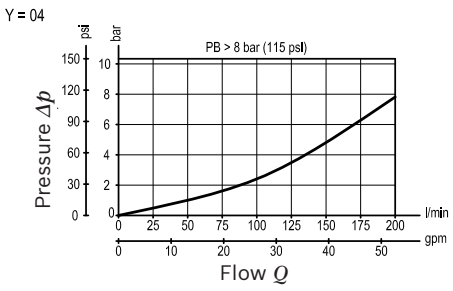

RE 1[illegible]-63/03.2016 Bosch Rexroth [illegible] Control [illegible]

381

Dimensions

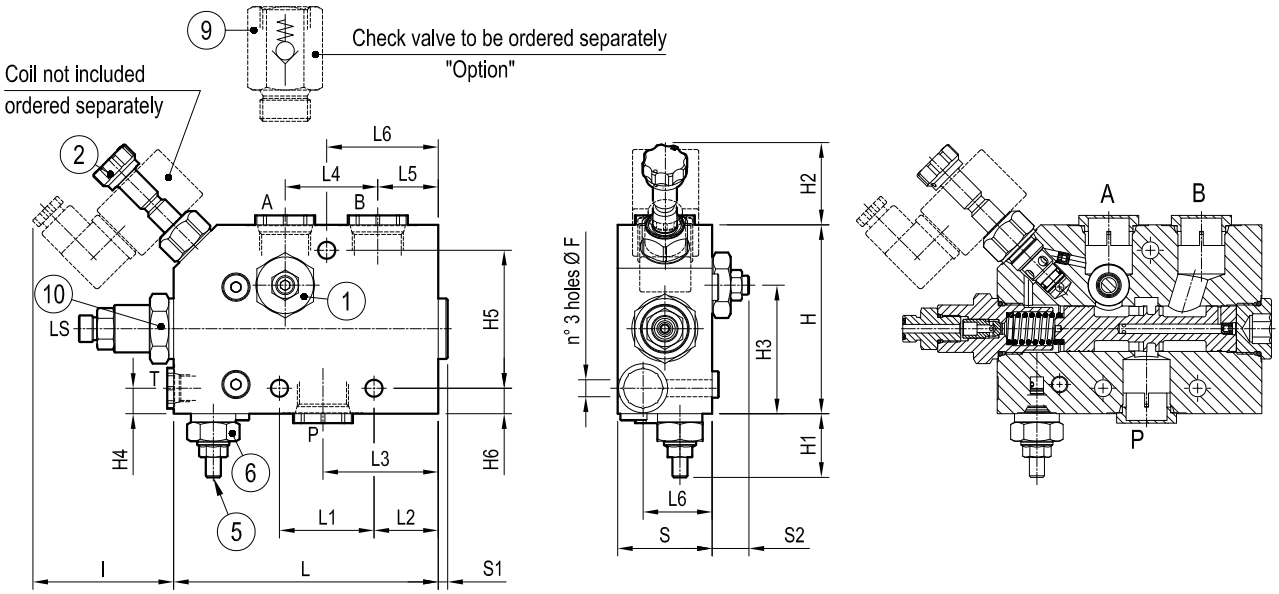

29 (1.14)	5 (0.2)	50 (1.97)	36.5 (1.44)	32 (1.26)	49 (1.93)	61 (2.4)	34 (1.34)	50 (1.97)	140 (5.51)	73 (2.87)	13.5 (0.53)	73 (2.87)	13.5 (0.53)	68 (2.68)	41 (1.61)	34 (1.34)	100 (3.93)	9 (0.35)	1 1/16-12 UN-2B	6 (13)
S2	S1	S	L6	L5	L4	L3	L2	L1	L	I	H6	H5	H4	H3	H2	H1	H	F	Port sizes	Weight kg (lbs)

Fitting and connections

When positioning and tightening the valve, avoid any deflection of the body which could prevent the internal spool from sliding freely and impair the metering performance; it is recommended to use the 3 available fixation holes as locating points and to fit 3 equal spacers (metal washers), one on each point, between the valve body and the supporting structure.

Connections to the hydraulic system:

- Port “P” (inlet) to the main line from the pump.
- Port “A” (priority outlet) to the line feeding the hydraulic hammer, or the attachment. Important: for the correct metering of the compensating spool the priority outlet shall be always pressurized, with a back-pressure of at least 8-9 bar (115-130 psi); if necessary, fit a check valve with the needed cracking pressure.
- Port “B” (by-pass, or excess flow outlet) to the line delivering the oil to the main directional valve.
- Port “T” to a tank line. It is absolutely necessary that port “T” is connected to a low pressure tank line, 1-1.5 bar max (15-22 psi max).
- Port “LS” to the load sensing line

Sleeve type check valves

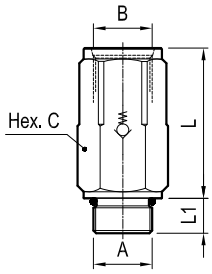

Port sizes A - B	Cracking pressure bar (psi)	Dimensions mm (inches)			Ordering code
		C	L	L1	
1 1/16-12 UN-2B	8 (115)	36 (1.42)	69 (2.72)	16 (0.63)	043117005701000 R930000453

Adjustment of priority flow

The volume of priority flow from port “A” can be easily modified by turning the screw (1): the flow increases by turning the screw counter-clockwise and, once adjusted to the desired level, it remains constant independently from the working pressure.

Adjustment of maximum priority pressure

The maximum pressure in the priority line “A” can be adjusted by turning the screw (5) of the small relief cartridge (6) which controls the maximum pressure in the chamber (3): when this “pilot” cartridge opens, the pressure in chamber (3) drops and the priority flow is stopped. Note: the relief cartridge (6) controls only the maximum pressure in the priority outlet “A”, and does not control the pressure in the by-pass and main line: the main line must be protected by another relief valve, capable to discharge the full oil flow.

Ordering code: **OD.02.17 - X - Y - Z**

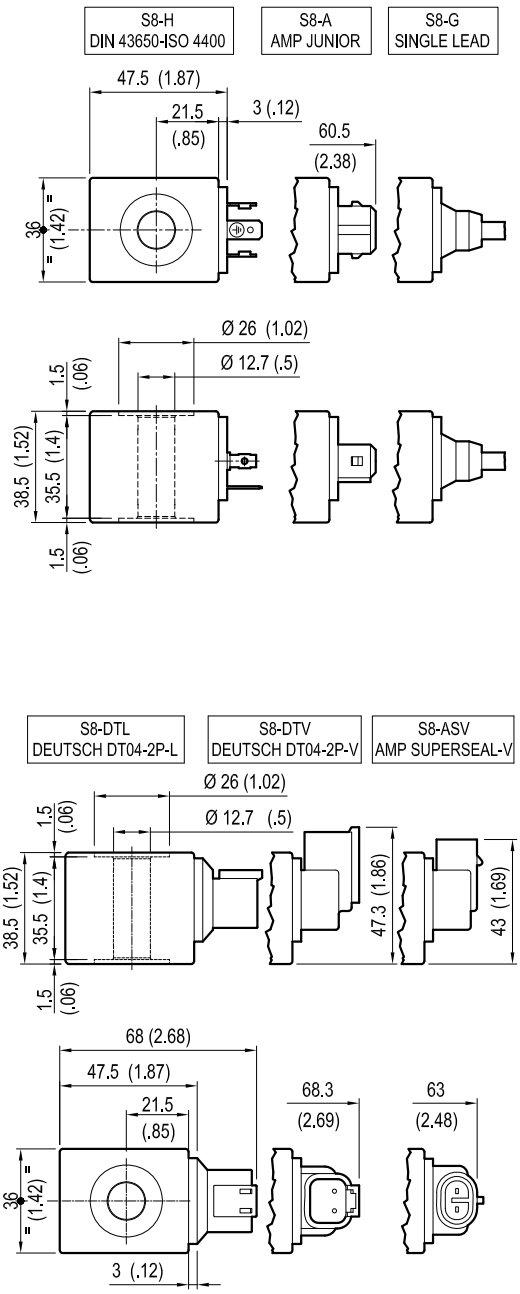

COILS

Attention: indicated coils fit every hammer valve versions

TECHNICAL DATA
Weight: 0.180 kg (0.4 lbs)
Encapsulating material: IXEF
Heat insulation Class H: 180°C (356°F)
Ambient temperature range: -30/+60°C (-86/+140°F)
Inlet voltage fluctuations must not exceed ±10% of nominal voltage to obtain correct operation and long life coils.

X	Y	Connections	Circuit	Voltage
01	30	DIN 43650 - ISO 4400	Standard	DC-RAC
07	30	AMP JUNIOR	Standard	DC only
0G	03	SINGLE LEAD	Standard	DC only *
14	30	DIN 43650 - ISO 4400	Bidirectionl Diode	DC only
15	30	AMP JUNIOR	Bidirectional Diode	DC only
0H	03	SINGLE LEAD	Bidirectional Diode	DC only *

* Length 300mm (11.8 inches). Ext. diameter 6.3mm (0.25 inches). External and internal Shealth Silicone rubber.

Z	Voltage V	Resistance Ohm (±7%)	Power W	Current A		ΔT °C (°F)
	Nominal	Ta = 20-25°C (68-77°F)	Cold coil	Cold coil	Hot coil	1 hour energized at Ta=20-25°C (68-77°F) Nominal voltage
OB	12 DC	7.4	20	1.62	1.19	105-110 (221-230)
OC	24 DC	28.5	20	0.85	0.61	
OG	14 DC		20			
AC	26 DC	34.3	20	0.76	0.54	

X	Y	Connections	Circuit	Voltage
20	30	DEUTSCH DT04-2P-L	Standard	DC only
20	3P	DEUTSCH DT04-2P-V	Standard	DC only
30	3P	AMP SUPERSEAL-V	Standard	DC only
22	30	DEUTSCH DT04-2P-L	Bidirectionl Diode	DC only
22	3P	DEUTSCH DT04-2P-V	Bidirectional Diode	DC only
32	3P	AMP SUPERSEAL-V	Bidirectional Diode	DC only

Z	Voltage V	Resistance Ohm (±7%)	Power W	Current A		ΔT °C (°F)
	Nominal	Ta = 20-25°C (68-77°F)	Cold coil	Cold coil	Hot coil	1 hour energized at Ta=20-25°C (68-77°F) Nominal voltage
OB	12 DC	7.4	20	1.62	1.19	105-110 (221-230)
OC	24 DC	28.5	20	0.85	0.61	
AC	26 DC	34.3	20	0.76	0.54	

Protection IP69 - DIN 40050 part 9
These coils have passed the THERMAL SHOCK DUNK TEST

Note: Please refer to data sheet RE 18325-90 for coils and connectors readily available and for further details.

SPARE PARTS

SOLENOID CARTRIDGE	
Port size	Ordering code
0M.43.21.80.57.20	OD1502181AS000 R901091102
0M.43.21.80.57.35	

RELIEF CARTRIDGE	
Port size	Ordering code
0M.43.21.80.57.20	041148035620000 R901104097
0M.43.21.80.57.35	041148035635000 R901104099

Dimensions [mm (inches)]

2-Way heavy duty flow control, with pressure compensated, solenoid and load sensing controlled priority flow

A-VRFC2C-VEI-VS-LS 0M.28.03.80 - Y - Z

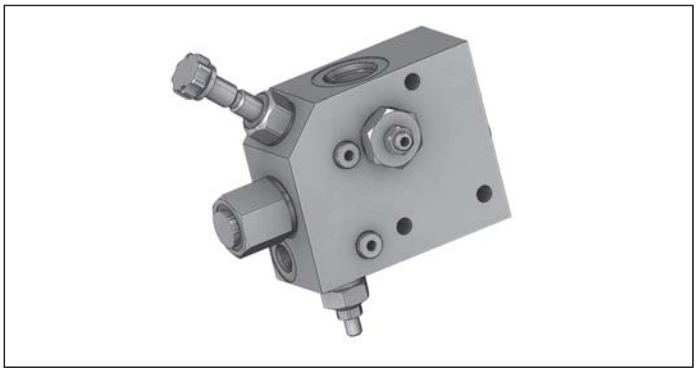

Description

The FLOW CONTROL VALVES code OM.28.03.80 are 2 way, with one inlet “P” and one outlet “A”, being the port “A” the priority line port, pressure compensated, with pressure relief valve, and available on demand through a solenoid cartridge.

A pressure signal “LS” from the valve is delivered to the load sensing circuit to increase the pump flow in order to match the requirement.

These valves provide a simple and efficient way to power hydraulic tools (such as hydraulic hammers) from the existing hydraulic system, without any need to modify the directional control valve.

Technical data

Max. operating pressure	350 bar (5000 psi)
Max. priority line pressure: limited by relief valve (6). See “priority pressure range”	
Back pressure at T port	max. 1.5 bar (20 psi)
Drain from T, with solenoid valve non-energized	up to 1.5 l/min. (0.4 gpm)
Weight	See “Dimensions”
Manifold material	Zinc plated steel
Fluid	Mineral oil (HL, HLP) according DIN 51524
Fluid temperature range	-20 °C to 80 (-4 to 176 °F)
Viscosity range	20 to 380 mm^2/s (cSt)
Recommended degree of fluid contamination	Class 19/17/14 according to ISO 4406
Other technical data	see data sheet 18350-50

Note: for applications outside these parameters, please consult us.

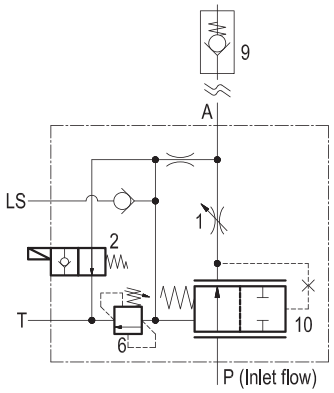

Ordering code

0M.28.03.80	Y	Z

2-Way heavy duty flow control,
with pressure compensated, solenoid and
load sensing controlled priority flow

	Priority pressure range		
	Adj. pressure range bar (psi)	Pres. increase bar/turn (psi/turn)	Std. setting Q=5 (l/min.) bar (psi)
20	50-210 (725-3000)	48 (696)	200 (2900)
35	100-350 (1450-5000)	95 (1378)	350 (5000)

	Port sizes		Regulated priority flow	
	P - A	T - LS	l/min (gpm) max	l/min (gpm) per turn
57	1 1/6-12 UN-2B	9/16-18 UNF	140 (37)	approx. 20 (5.3)

Tamper resistant cap
ordering code 11.04.23.002
Mat. no. R930000752

Preferred types

Type	Material number
0M2803805720000	R930004218
0M2803805735000	R930004219

Type	Material number

Characteristic curves

Priority flow vs pressure
Version 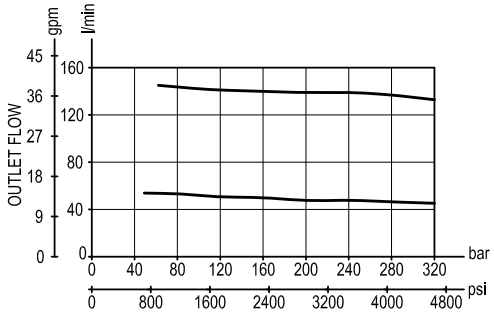

Dimensions

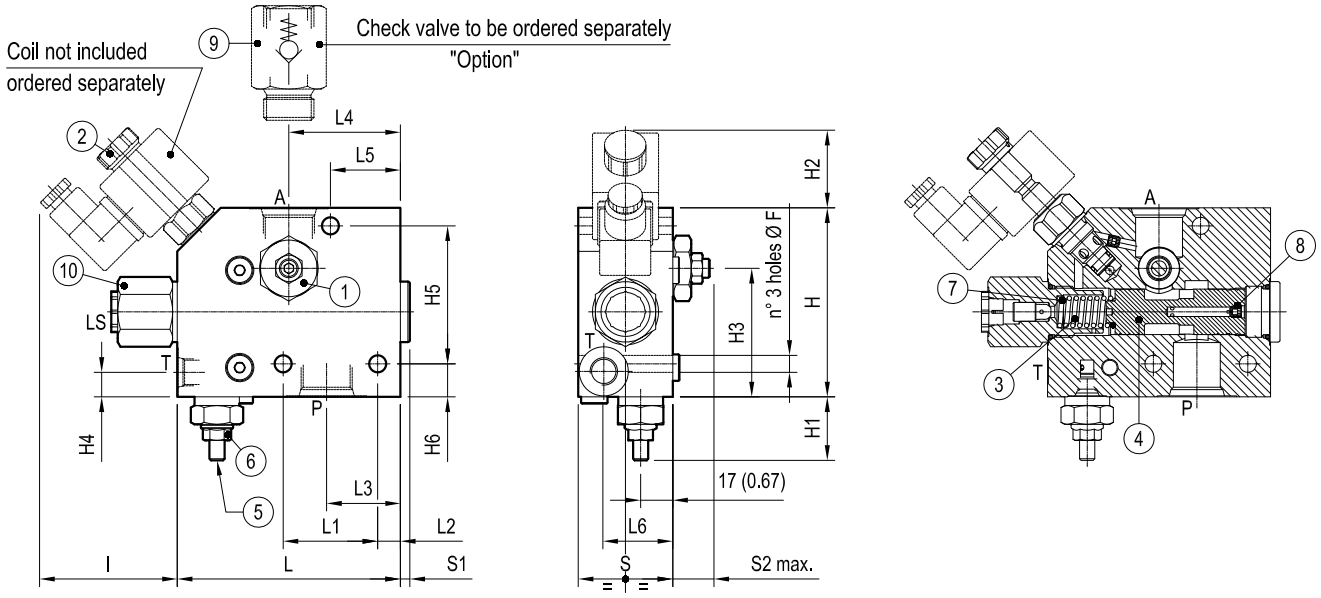

28.5 max (1.12 max)	5 (0.2)	50 (1.97)	36.5 (1.44)	37 (1.46)	59 (2.32)	39 (1.54)	12 (0.47)	50 (1.97)	118 (4.65)	73 (2.87)	17.5 (0.69)	73 (2.87)	13.5 (0.53)	68 (2.68)	41 (1.61)	34 (1.34)	100 (3.93)	9 (0.35)	1 1/16-12 UN-2B	4.6 10.1)
S2	S1	S	L6	L5	L4	L3	L2	L1	L	I	H6	H5	H4	H3	H2	H1	H	F	Port sizes	Weight kg (lbs)

Fitting and connections

When positioning and tightening the valve, avoid any deflection of the body which could prevent the internal spool from sliding freely and impair the metering performance; it is recommended to use the 3 available fixation holes as locating points and to fit 3 equal spacers (metal washers), one on each point, between the valve body and the supporting structure.

Connections to the hydraulic system:

- Port “P” (inlet) to the main line from the pump.
- Port “A” (priority outlet) to the line feeding the hydraulic hammer, or the attachment. Important: for the correct metering of the compensating spool the priority outlet shall be always pressurized, with a back-pressure of at least 8-9 bar (115-130 psi); if necessary, fit a check valve with the needed cracking pressure.
- Port “T” to a tank line. It is absolutely necessary that port “T” is connected to a low pressure tank line, 1-1.5 bar max (15-22 psi max).
- Port “LS” to the load sensing line

Sleeve type check valves

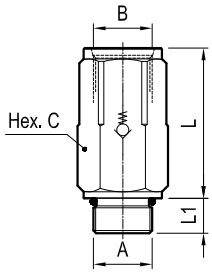

Port sizes A - B	Cracking pressure bar (psi)	Dimensions mm (inches)			Ordering code
		C	L	L1	
1 1/16-12 UN-2B	8 (115)	36 (1.42)	69 (2.72)	16 (0.63)	043117005701000 R930000453

Adjustment of priority flow

The volume of priority flow from port “A” can be easily modified by turning the screw (1): the flow increases by turning the screw counter-clockwise and, once adjusted to the desired level, it remains constant independently from the working pressure.

Adjustment of maximum priority pressure

The maximum pressure in the priority line “A” can be adjusted by turning the screw (5) of the small relief cartridge (6) which controls the maximum pressure in the chamber (3): when this “pilot” cartridge opens, the pressure in chamber (3) drops and the priority flow is stopped. Note: the relief cartridge (6) controls only the maximum pressure in the priority outlet “A”, and does not control the pressure in the by-pass and main line: the main line must be protected by another relief valve, capable to discharge the full oil flow.

Ordering code: **OD.02.17 - X - Y - Z**

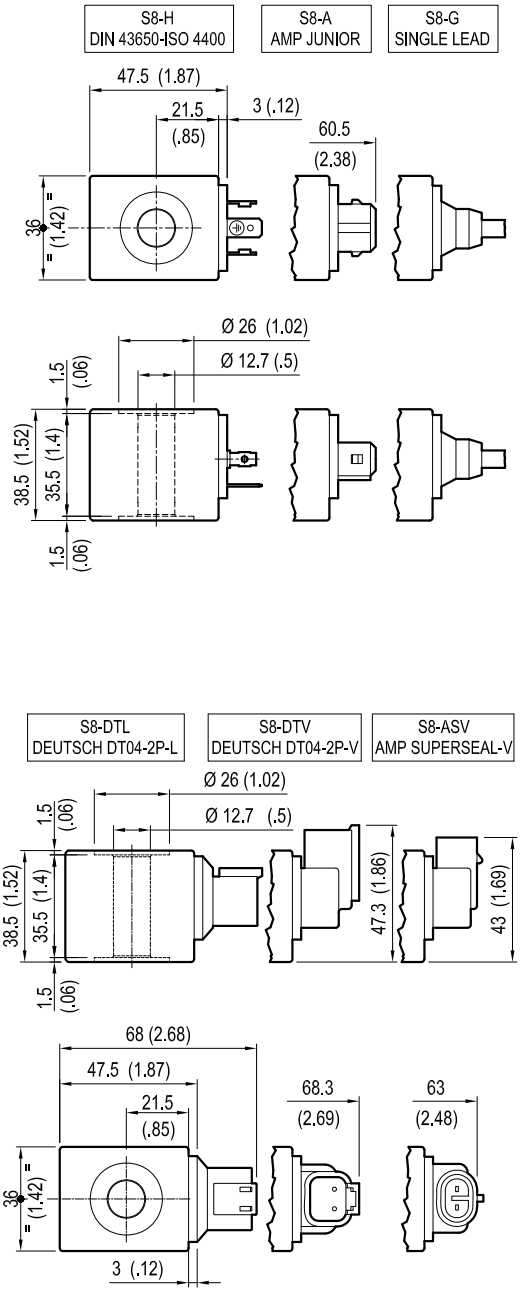

COILS

Attention: indicated coils fit every hammer valve versions

TECHNICAL DATA
Weight: 0.180 kg (0.4 lbs)
Encapsulating material: IXEF
Heat insulation Class H: 180°C (356°F)
Ambient temperature range: -30/+60°C (-86/+140°F)
Inlet voltage fluctuations must not exceed ±10% of nominal voltage to obtain correct operation and long life coils.

X	Y	Connections	Circuit	Voltage
01	30	DIN 43650 - ISO 4400	Standard	DC-RAC
07	30	AMP JUNIOR	Standard	DC only
0G	03	SINGLE LEAD	Standard	DC only *
14	30	DIN 43650 - ISO 4400	Bidirectionl Diode	DC only
15	30	AMP JUNIOR	Bidirectional Diode	DC only
0H	03	SINGLE LEAD	Bidirectional Diode	DC only *

* Length 300mm (11.8 inches). Ext. diameter 6.3mm (0.25 inches). External and internal Shealth Silicone rubber.

Z	Voltage V	Resistance Ohm (±7%)	Power W	Current A		ΔT °C (°F)
	Nominal	Ta = 20-25°C (68-77°F)	Cold coil	Cold coil	Hot coil	1 hour energized at Ta=20-25°C (68-77°F) Nominal voltage
OB	12 DC	7.4	20	1.62	1.19	105-110 (221-230)
OC	24 DC	28.5	20	0.85	0.61	
OG	14 DC		20			
AC	26 DC	34.3	20	0.76	0.54	

X	Y	Connections	Circuit	Voltage
20	30	DEUTSCH DT04-2P-L	Standard	DC only
20	3P	DEUTSCH DT04-2P-V	Standard	DC only
30	3P	AMP SUPERSEAL-V	Standard	DC only
22	30	DEUTSCH DT04-2P-L	Bidirectionl Diode	DC only
22	3P	DEUTSCH DT04-2P-V	Bidirectional Diode	DC only
32	3P	AMP SUPERSEAL-V	Bidirectional Diode	DC only

Z	Voltage V	Resistance Ohm (±7%)	Power W	Current A		ΔT °C (°F)
	Nominal	Ta = 20-25°C (68-77°F)	Cold coil	Cold coil	Hot coil	1 hour energized at Ta=20-25°C (68-77°F) Nominal voltage
OB	12 DC	7.4	20	1.62	1.19	105-110 (221-230)
OC	24 DC	28.5	20	0.85	0.61	
AC	26 DC	34.3	20	0.76	0.54	

Protection IP69 - DIN 40050 part 9
These coils have passed the THERMAL SHOCK DUNK TEST

Note: Please refer to data sheet RE 18325-90 for coils and connectors readily available and for further details.

SPARE PARTS

SOLENOID CARTRIDGE	
Port size	Ordering code
0M.28.03.80.57.20	OD1502181AS000 R901091102
0M.28.03.80.57.35	

RELIEF CARTRIDGE	
Port size	Ordering code
0M.28.03.80.57.20	041148035620000 R901104097
0M.28.03.80.57.35	041148035635000 R901104099

Dimensions [mm (inches)]

Flow divider, combiner

DRF

0M.51.03.90.02 - Z

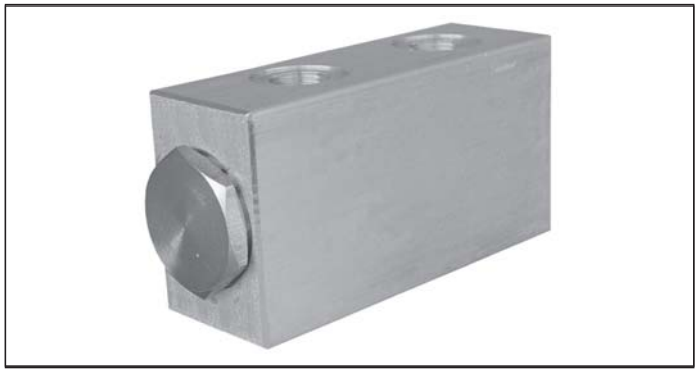

Description

This valve gives division of input flow from V to C1-C2, and re-combines flows in reverse direction from C1-C2 to V. The ratio between the flows through C1 and through C2 is maintained constant (typically 50% / 50%) over a wide range of pressure variations and of pressure imbalance in order to synchronize the motion of 2 actuators in both forward and reverse directions. In flow division mode, should either C1 or C2 be blocked, approximately 1÷2% of the available flow can be forced through the port still open.

Technical data

Operating pressure	up to 210 bar (3000 psi)
Flow division ratio: 50% - 50% For any chosen inlet flow capacity (refer to table Z), the slippage, or the difference from theoretical value between the divided flows, depends from the inlet flow, and is lowest in the top portion of the selected range: generally it never exceeds ± 3%.	
Weight	0.9 kg (1.98 lbs)
Manifold material	Aluminium
Note: aluminium bodies are often strong enough for operating pressures exceeding 210 bar (3000 psi), depending from the fatigue life expected in the specific application. If in doubt, consult our Service Network.	
Fluid	Mineral oil (HL, HLP) according DIN 51524
Fluid temperature range	-30 °C to 100 (-22 to 212 °F)
Viscosity range	5 to 800 mm^2/s (cSt)
Recommended degree of fluid contamination	Class 19/17/14 according to ISO 4406
Other technical data	see data sheet 18350-50

Note: for applications outside these parameters, please consult us.

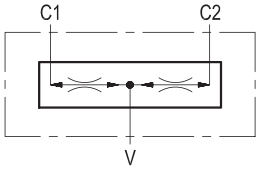

Characteristic curve

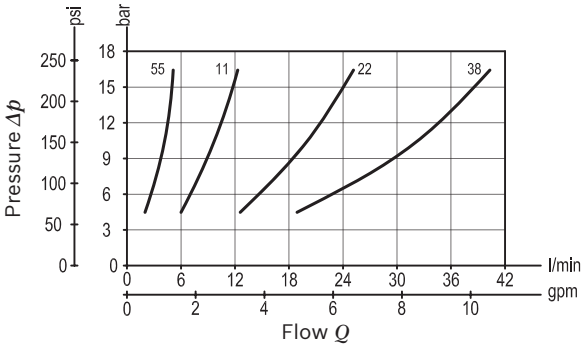

Dimensions [mm (inches)]

Ordering code

0M.51.03.90	02	Z

Flow divider, combiner

Port sizes	V	C1 - C2	
	G 3/8	G 3/8	

	INLET CAPACITY
55	2.8 to 5.8 l/min (0.75 to 1.53 gpm)
11	6.5 to 11 l/min (1.72 to 2.91 gpm)
22	13 to 22 l/min (3.44 to 5.81 gpm)
38	25 to 38 l/min (6.61 to 10 gpm)

Preferred types

Type	Material number
0M510390021100A	R930001708
0M510390022200A	R930001714
0M510390023800A	R930001839
0M510390025500B	R930001510

Type	Material number

Dimensions

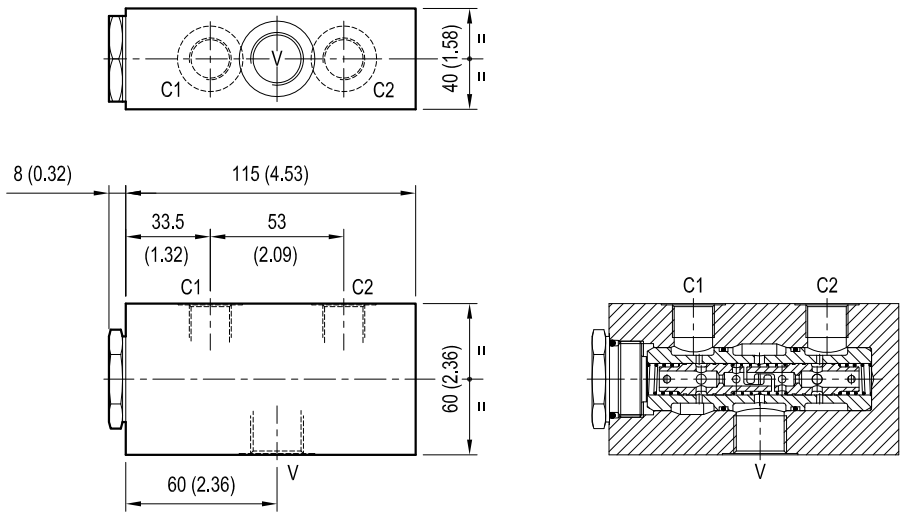

Flow divider, combiner

DRF

0M.51.03.90.03 - Z

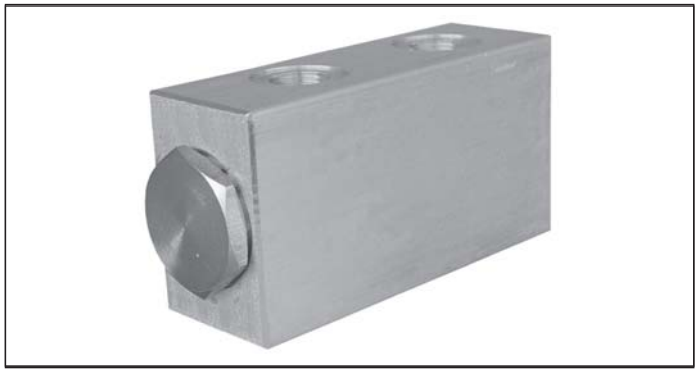

Description

This valve gives division of input flow from V to C1-C2, and re-combines flows in reverse direction from C1-C2 to V. The ratio between the flows through C1 and through C2 is maintained constant (typically 50% / 50%) over a wide range of pressure variations and of pressure imbalance in order to synchronize the motion of 2 actuators in both forward and reverse directions. In flow division mode, should either C1 or C2 be blocked, approximately 1÷2% of the available flow can be forced through the port still open.

Technical data

Operating pressure	up to 210 bar (3000 psi)
Flow division ratio: 50% - 50% For any chosen inlet flow capacity (refer to table Z), the slippage, or the difference from theoretical value between the divided flows, depends from the inlet flow, and is lowest in the top portion of the selected range: generally it never exceeds ± 3%.	
Weight	0.9 kg (1.98 lbs)
Manifold material	Aluminium
Note: aluminium bodies are often strong enough for operating pressures exceeding 210 bar (3000 psi), depending from the fatigue life expected in the specific application. If in doubt, consult our Service Network.	
Fluid	Mineral oil (HL, HLP) according DIN 51524
Fluid temperature range	-30 °C to 100 (-22 to 212 °F)
Viscosity range	5 to 800 mm^2/s (cSt)
Recommended degree of fluid contamination	Class 19/17/14 according to ISO 4406
Other technical data	see data sheet 18350-50

Note: for applications outside these parameters, please consult us.

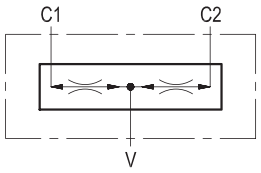

Characteristic curve

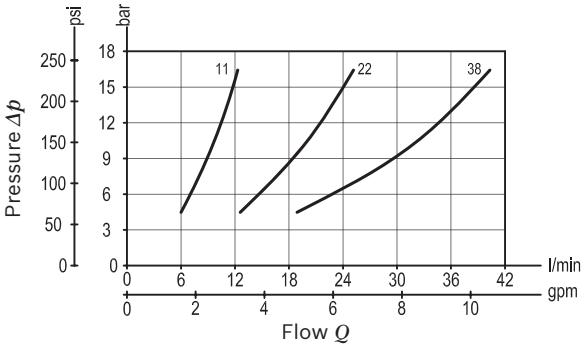

Dimensions [mm (inches)]

Ordering code

0M.51.03.90	03	Z

Flow divider, combiner

Port sizes	V	C1 - C2	
	G 1/2	G 3/8	

	INLET CAPACITY
11	6.5 to 11 l/min (1.72 to 2.91 gpm)
13	13 to 22 l/min (3.44 to 5.81 gpm)
38	25 to 38 l/min (6.61 to 10 gpm)

Preferred types

Type	Material number
0M510390031100A	R930001710
0M510390032200A	R930001754
0M510390033800A	R930001840

Type	Material number

Dimensions

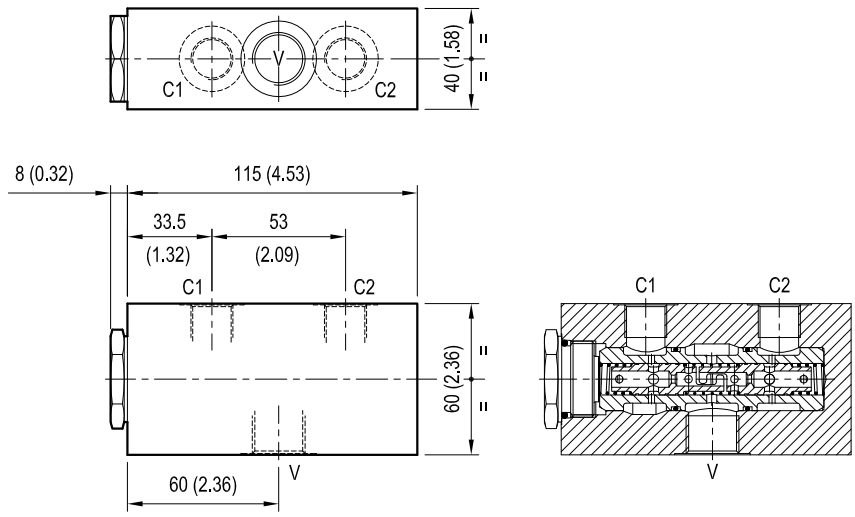

Flow divider, combiner

DRF

0M.51.03.90.04 - Z

Description

This valve gives division of input flow from V to C1-C2, and re-combines flows in reverse direction from C1-C2 to V. The ratio between the flows through C1 and through C2 is maintained constant (typically 50% / 50%) over a wide range of pressure variations and of pressure imbalance in order to synchronize the motion of 2 actuators in both forward and reverse directions. In flow division mode, should either C1 or C2 be blocked, approximately 1÷2% of the available flow can be forced through the port still open.

Technical data

Operating pressure	up to 210 bar (3000 psi)
Flow division ratio: 50% - 50% For any chosen inlet flow capacity (refer to table Z), the slippage, or the difference from theoretical value between the divided flows, depends from the inlet flow, and is lowest in the top portion of the selected range: generally it never exceeds ± 3%.	
Weight	2.2 kg (4.9 lbs)
Manifold material	Aluminium
Note: aluminium bodies are often strong enough for operating pressures exceeding 210 bar (3000 psi), depending from the fatigue life expected in the specific application. If in doubt, consult our Service Network.	
Fluid	Mineral oil (HL, HLP) according DIN 51524
Fluid temperature range	-30 °C to 100 (-22 to 212 °F)
Viscosity range	5 to 800 mm^2/s (cSt)
Recommended degree of fluid contamination	Class 19/17/14 according to ISO 4406
Other technical data	see data sheet 18350-50

Note: for applications outside these parameters, please consult us.

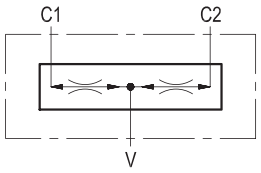

Characteristic curve

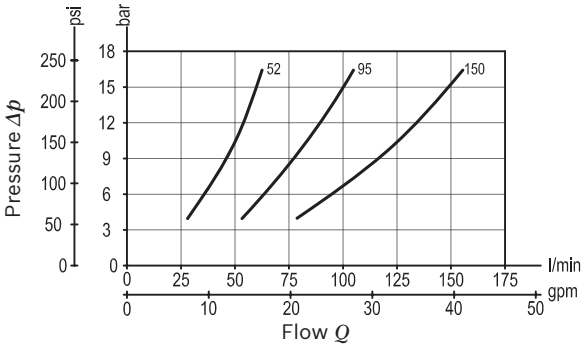

Ordering code

0M.51.03.90	04	Z

Flow divider, combiner

	INLET CAPACITY
52	28 to 55 l/min (7.4 to 14.53 gpm)
95	56 to 95 l/min (14.8 to 25.1 gpm)
150	90 to 150 l/min (27.78 to 39.63 gpm)

Port sizes	V	C1 - C2
	G 3/4	G 1/2

Preferred types

Type	Material number
0M510390045200A	R930001930
0M510390049500A	R930001889
0M510390041500A	R930005816

Type	Material number

Dimensions

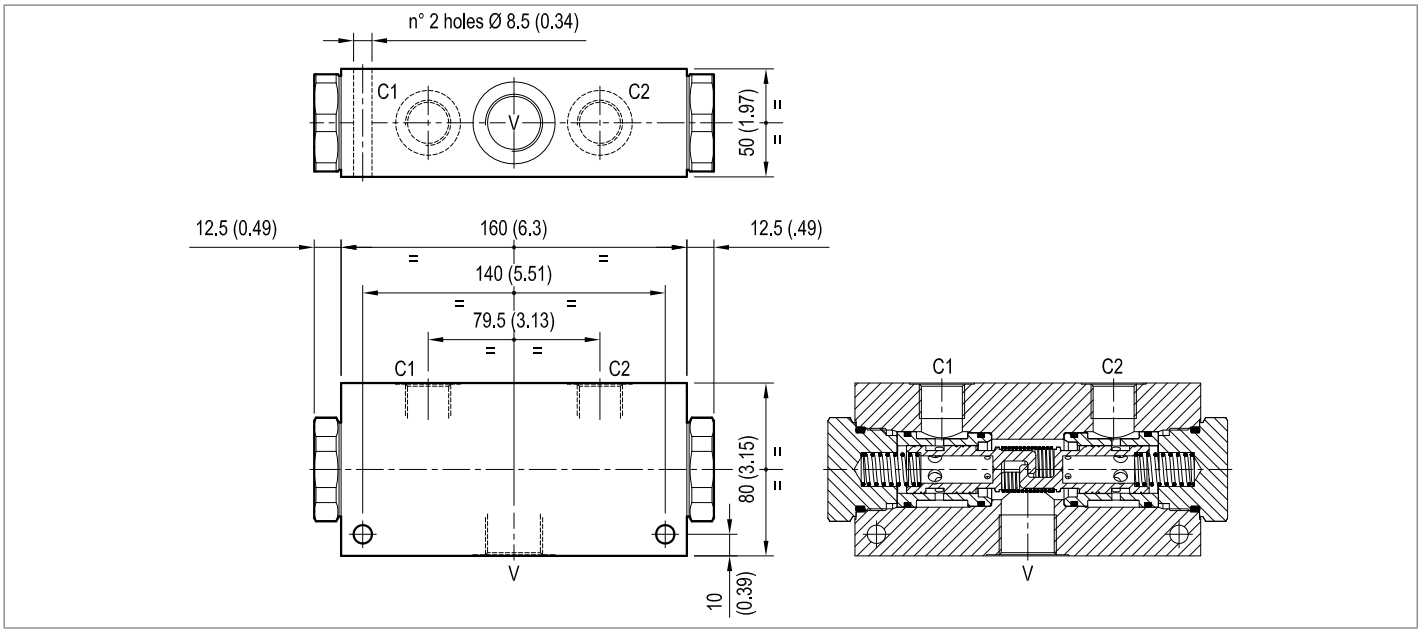

Flow divider, combiner

DRF

0M.51.03.90.05 - Z

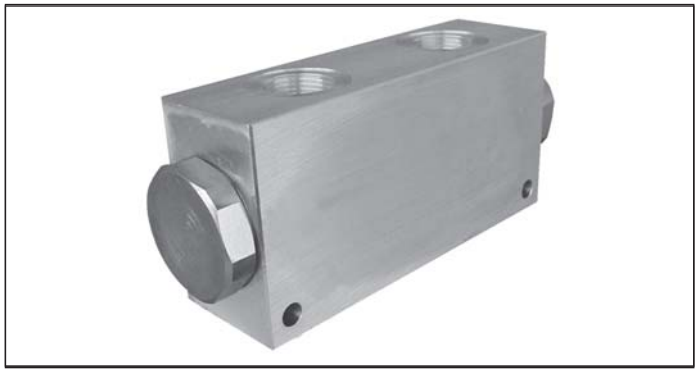

Description

This valve gives division of input flow from V to C1-C2, and re-combines flows in reverse direction from C1-C2 to V. The ratio between the flows through C1 and through C2 is maintained constant (typically 50% / 50%) over a wide range of pressure variations and of pressure imbalance in order to synchronize the motion of 2 actuators in both forward and reverse directions. In flow division mode, should either C1 or C2 be blocked, approximately 1÷2% of the available flow can be forced through the port still open.

Technical data

Operating pressure	up to 210 bar (3000 psi)
Flow division ratio: 50% - 50% For any chosen inlet flow capacity (refer to table Z), the slippage, or the difference from theoretical value between the divided flows, depends from the inlet flow, and is lowest in the top portion of the selected range: generally it never exceeds ± 3%.	
Weight	2.2 kg (4.9 lbs)
Manifold material	Aluminium
Note: aluminium bodies are often strong enough for operating pressures exceeding 210 bar (3000 psi), depending from the fatigue life expected in the specific application. If in doubt, consult our Service Network.	
Fluid	Mineral oil (HL, HLP) according DIN 51524
Fluid temperature range	-30 °C to 100 (-22 to 212 °F)
Viscosity range	5 to 800 mm^2/s (cSt)
Recommended degree of fluid contamination	Class 19/17/14 according to ISO 4406
Other technical data	see data sheet 18350-50

Note: for applications outside these parameters, please consult us.

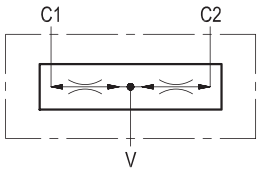

Characteristic curve

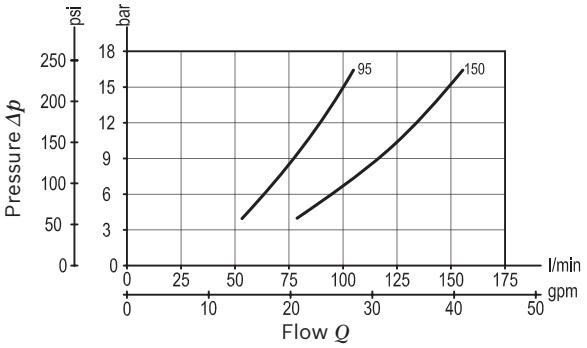

Ordering code

0M.51.03.90	05	Z

Flow divider, combiner

	INLET CAPACITY
95	56 to 95 l/min (14.8 to 25.1 gpm)
150	90 to 150 l/min (27.78 to 39.63 gpm)

Port sizes	V	C1 - C2
	G 1	G 3/4

Preferred types

Type	Material number
0M510390059500A	R930001891
0M510390051500A	R930005817

Type	Material number

Dimensions

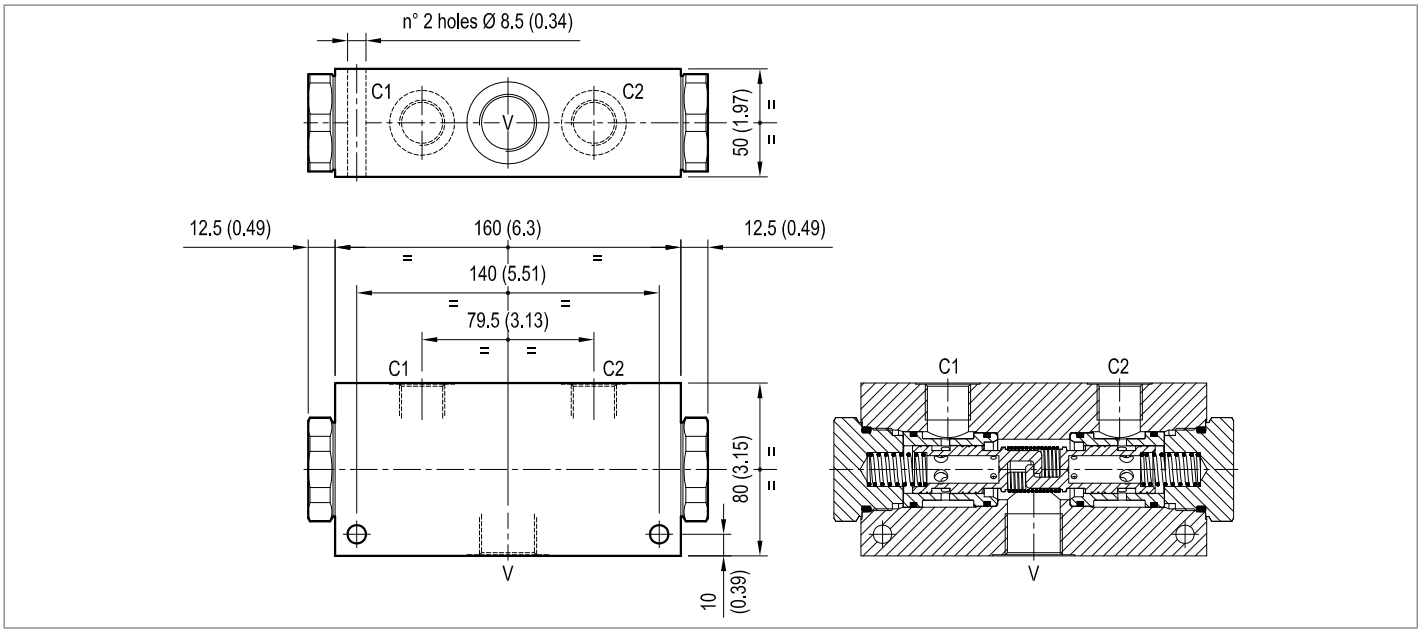

Flow divider, combiner

A-DRF

0M.E1.21.90.02 - Z

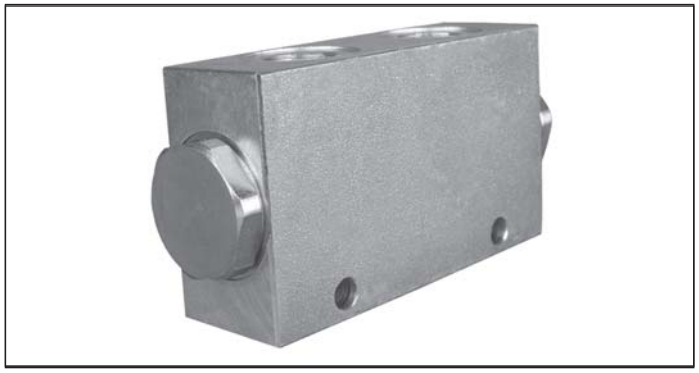

Description

This valve gives division of input flow from V to C1-C2, and re-combines flows in reverse direction from C1-C2 to V. The ratio between the flows through C1 and through C2 is maintained constant (typically 50% / 50%) over a wide range of pressure variations and of pressure imbalance in order to synchronize the motion of 2 actuators in both forward and reverse directions. In flow division mode, should either C1 or C2 be blocked, approximately 1÷2% of the available flow can be forced through the port still open.

Technical data

Max. operating pressure	350 bar (5000 psi)
Flow division ratio: 50% - 50% For any chosen inlet flow capacity (refer to table Z), the slippage, or the difference from theoretical value between the divided flows, depends from the inlet flow, and is lowest in the top portion of the selected range: generally it never exceeds ± 3%.	
Weight	1.1 kg (2.4 lbs)
Manifold material	Zinc plated steel
Fluid	Mineral oil (HL, HLP) according DIN 51524
Fluid temperature range	-30 °C to 100 (-22 to 212 °F)
Viscosity range	5 to 800 mm^2/s (cSt)
Recommended degree of fluid contamination	Class 19/17/14 according to ISO 4406
Other technical data	see data sheet 18350-50

Note: for applications outside these parameters, please consult us.

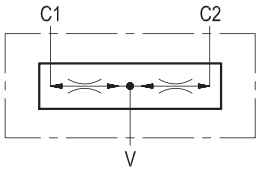

Characteristic curve

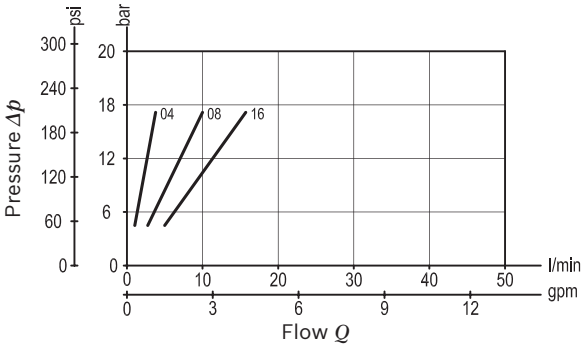

Dimensions [mm (inches)]

Ordering code

0M.E1.21.90	02	Z

Flow divider, combiner

	INLET CAPACITY
04	2 to 4 l/min (0.53 to 1.04 gpm)
08	4 to 8 l/min (1.06 to 2.11 gpm)
16	8 to 16 l/min (2.11 to 4.23 gpm)

Port sizes	V	C1 - C2	
	G 3/8	G 3/8	

Preferred types

Type	Material number
0ME12190020400C	R930056612
0ME12190020800C	R930056614
0ME12190021600C	R930056615

Type	Material number

Dimensions

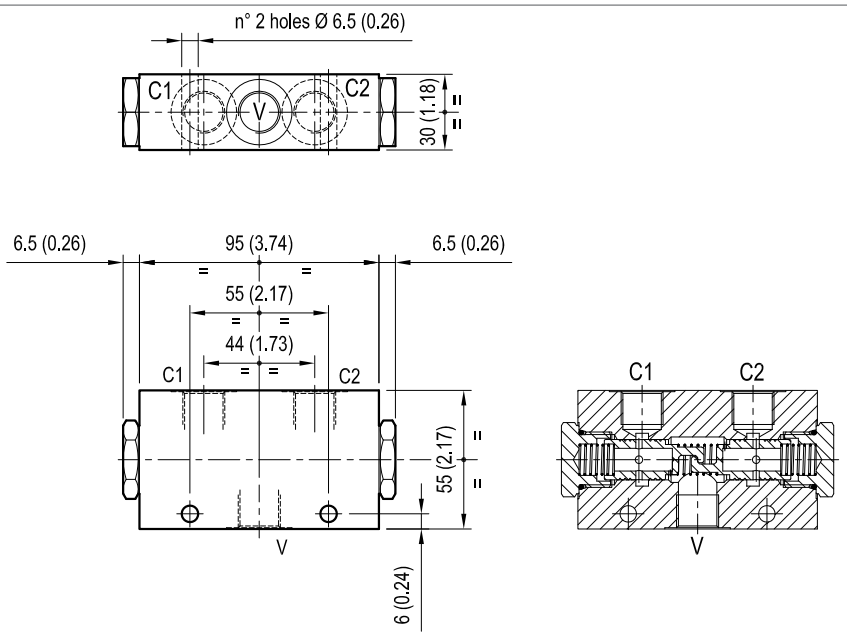

Flow divider, combiner

A-DRF

0M.E1.21.90.03 - Z

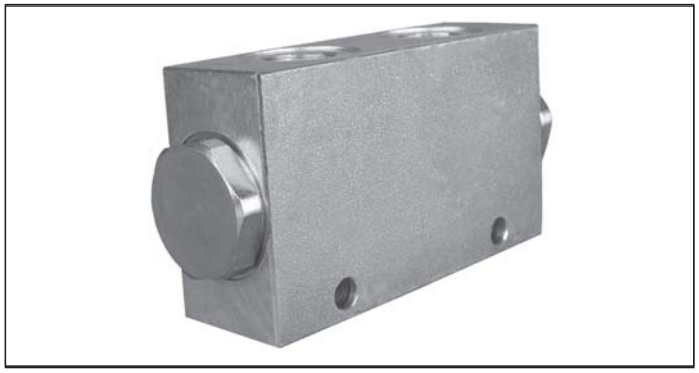

Description

This valve gives division of input flow from V to C1-C2, and re-combines flows in reverse direction from C1-C2 to V. The ratio between the flows through C1 and through C2 is maintained constant (typically 50% / 50%) over a wide range of pressure variations and of pressure imbalance in order to synchronize the motion of 2 actuators in both forward and reverse directions. In flow division mode, should either C1 or C2 be blocked, approximately 1÷2% of the available flow can be forced through the port still open.

Technical data

Max. operating pressure	350 bar (5000 psi)
Flow division ratio: 50% - 50% For any chosen inlet flow capacity (refer to table Z), the slippage, or the difference from theoretical value between the divided flows, depends from the inlet flow, and is lowest in the top portion of the selected range: generally it never exceeds ± 3%.	
Weight	1.1 kg (2.4 lbs)
Manifold material	Zinc plated steel
Fluid	Mineral oil (HL, HLP) according DIN 51524
Fluid temperature range	-30 °C to 100 (-22 to 212 °F)
Viscosity range	5 to 800 mm^2/s (cSt)
Recommended degree of fluid contamination	Class 19/17/14 according to ISO 4406
Other technical data	see data sheet 18350-50

Note: for applications outside these parameters, please consult us.

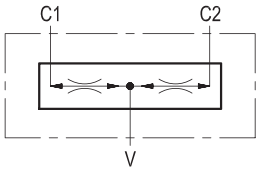

Characteristic curve

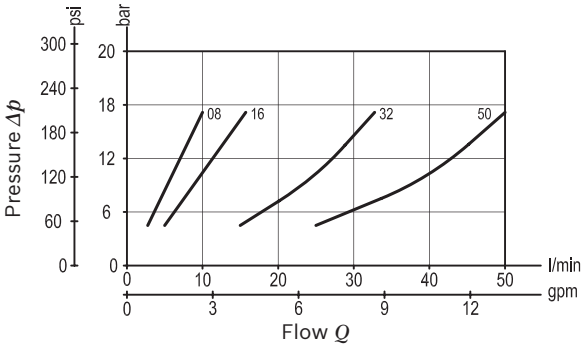

Dimensions [mm (inches)]

Ordering code

0M.E1.21.90	03	Z

Flow divider, combiner

Port sizes	V	C1 - C2	
	G 1/2	G 3/8	

	INLET CAPACITY
08	4 to 8 l/min (1.06 to 2.11 gpm)
16	8 to 16 l/min (2.11 to 4.23 gpm)
32	16 to 32 l/min (4.23 to 8.45 gpm)
50	25 to 50 l/min (6.61 to 13.21 gpm)

Preferred types

Type	Material number
0ME12190030800C	R930056521
0ME12190031600C	R930056522
0ME12190033200C	R930056523
0ME12190035000C	R930056524

Type	Material number

Dimensions

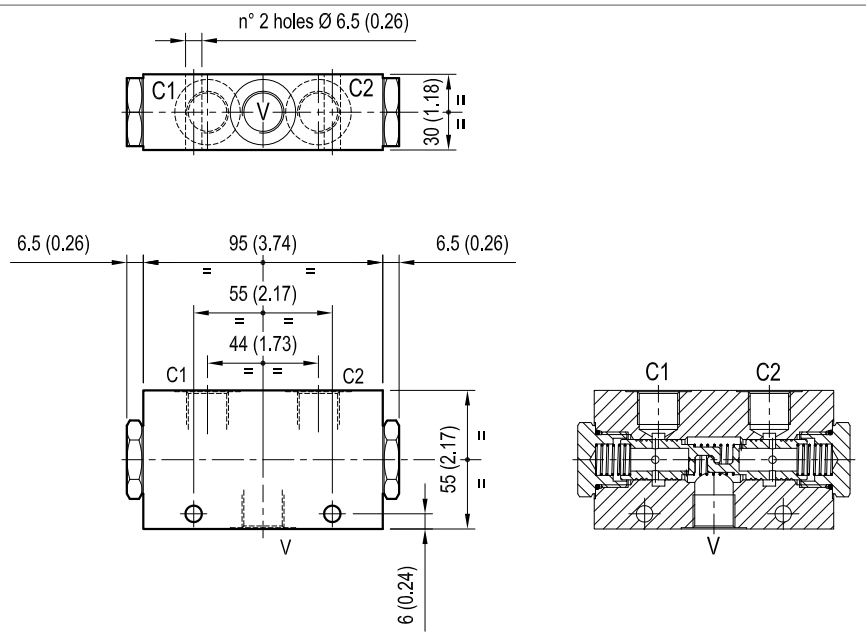

Flow divider, combiner

A-DRF

0M.E1.03.90.04 - Z

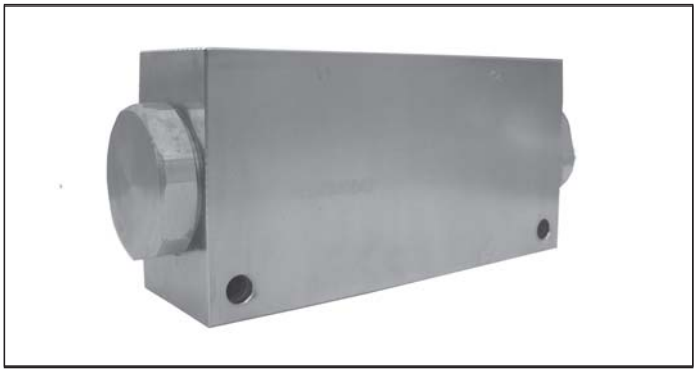

Description

This valve gives division of input flow from V to C1-C2, and re-combines flows in reverse direction from C1-C2 to V. The ratio between the flows through C1 and through C2 is maintained constant (typically 50% / 50%) over a wide range of pressure variations and of pressure imbalance in order to synchronize the motion of 2 actuators in both forward and reverse directions. In flow division mode, should either C1 or C2 be blocked, approximately 1÷2% of the available flow can be forced through the port still open.

Technical data

Max. operating pressure	350 bar (5000 psi)
Flow division ratio: 50% - 50% For any chosen inlet flow capacity (refer to table Z), the slippage, or the difference from theoretical value between the divided flows, depends from the inlet flow, and is lowest in the top portion of the selected range: generally it never exceeds ± 3%.	
Weight	4.5 kg (9.9 lbs)
Manifold material	Zinc plated steel
Fluid	Mineral oil (HL, HLP) according DIN 51524
Fluid temperature range	-30 °C to 100 (-22 to 212 °F)
Viscosity range	5 to 800 mm^2/s (cSt)
Recommended degree of fluid contamination	Class 19/17/14 according to ISO 4406
Other technical data	see data sheet 18350-50

Note: for applications outside these parameters, please consult us.

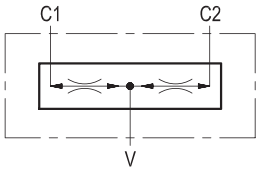

Characteristic curve

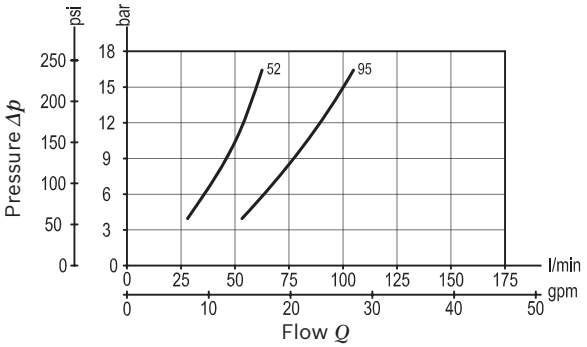

Dimensions [mm (inches)]

Ordering code

0M.E1.03.90	04	Z

Flow divider, combiner

	INLET CAPACITY
52	28 to 55 l/min (7.4 to 14.53 gpm)
95	56 to 95 l/min (14.8 to 25.1 gpm)

Port sizes	V	C1 - C2	
	G 3/4	G 1/2	

Preferred types

Type	Material number
0ME10390045200A	R930001929
0ME10390049500A	R930001901

Type	Material number

Dimensions

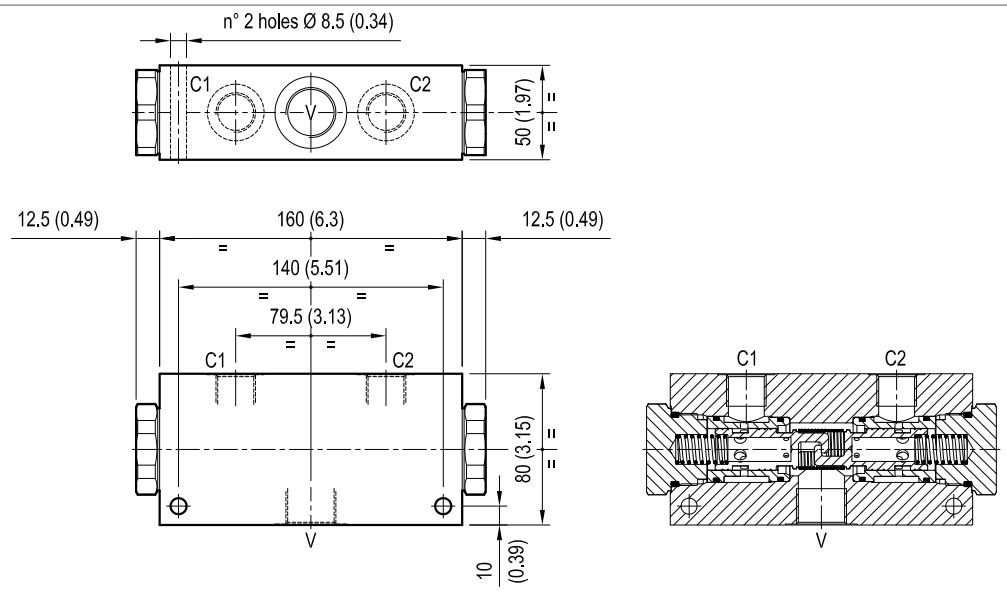

Flow divider, combiner

A-DRF

0M.E1.03.90.05 - Z

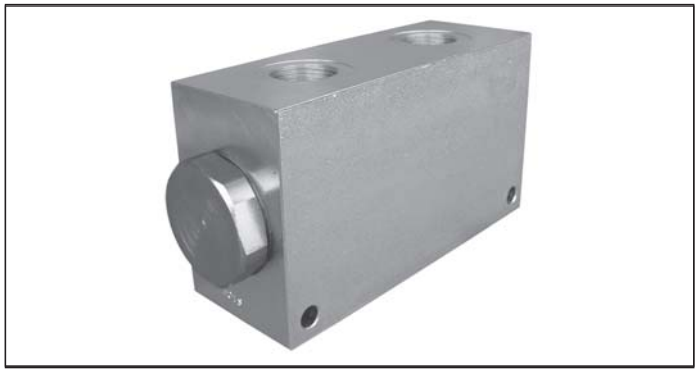

Description

This valve gives division of input flow from V to C1-C2, and re-combines flows in reverse direction from C1-C2 to V. The ratio between the flows through C1 and through C2 is maintained constant (typically 50% / 50%) over a wide range of pressure variations and of pressure imbalance in order to synchronize the motion of 2 actuators in both forward and reverse directions. In flow division mode, should either C1 or C2 be blocked, approximately 1÷2% of the available flow can be forced through the port still open.

Technical data

Max. operating pressure	350 bar (5000 psi)
Flow division ratio: 50% - 50% For any chosen inlet flow capacity (refer to table Z), the slippage, or the difference from theoretical value between the divided flows, depends from the inlet flow, and is lowest in the top portion of the selected range: generally it never exceeds ± 3%.	
Weight	6.1 kg (13.3 lbs)
Manifold material	Zinc plated steel
Fluid	Mineral oil (HL, HLP) according DIN 51524
Fluid temperature range	-30 °C to 100 (-22 to 212 °F)
Viscosity range	5 to 800 mm^2/s (cSt)
Recommended degree of fluid contamination	Class 19/17/14 according to ISO 4406
Other technical data	see data sheet 18350-50

Note: for applications outside these parameters, please consult us.

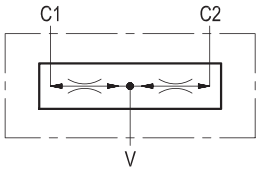

Characteristic curve

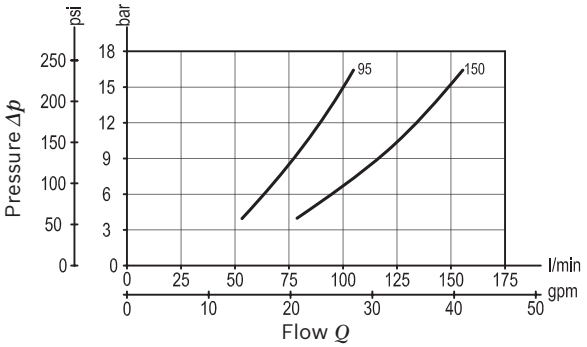

Dimensions [mm (inches)]

Ordering code

0M.E1.03.90	05	Z

Flow divider, combiner

	INLET CAPACITY
95	56 to 95 l/min (14.8 to 25.1 gpm)
150	90 to 150 l/min (27.78 to 39.63 gpm)

Port sizes	V	C1 - C2	
	G 1	G 3/4	

Preferred types

Type	Material number
0ME10390059500A	R930001903
0ME10390051500A	R930005819

Type	Material number

Dimensions

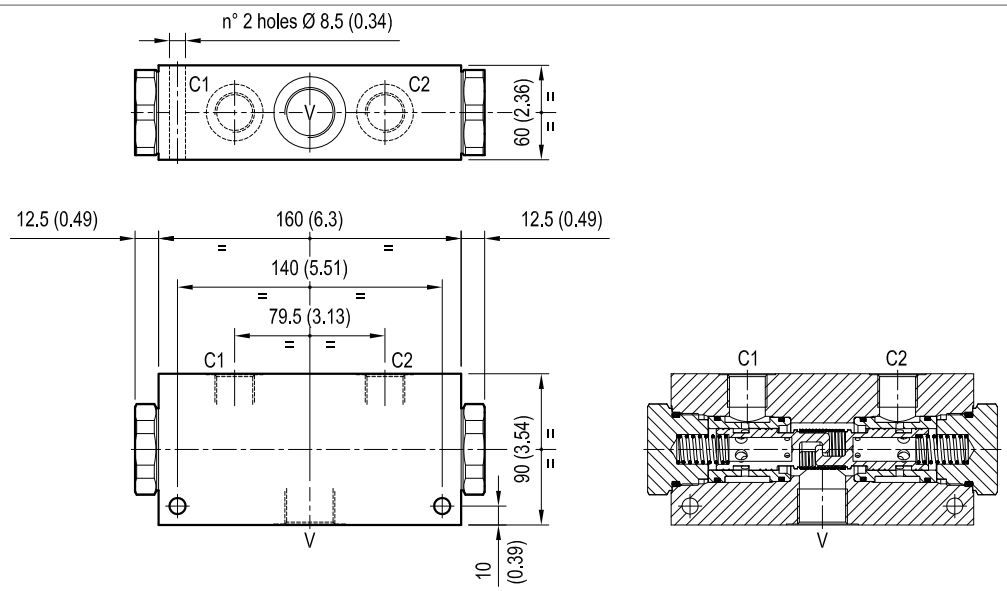

Load holding/motion control

Auxiliary valves: pressure reducing

Designation	Description	Ports	Code	Data sheet	Page
Pressure reducing and relieving, direct acting spool type	VRP-R	G 3/8	059027XYZ	18309-72	409
Pressure reducing and relieving, direct acting spool type with free flow check	VRP-R-VU	G 3/8	059019XYZ	18309-73	411
Pressure reducing , pilot operated spool type	VRPC-150	G 1/2, G 3/4	059033XYZ	18309-74	413

Pressure reducing and relieving, direct acting spool type

VRP-R

05.90.27 - X - Y - Z

Technical data

Max. operating pressure	210 bar (3000 psi)
Max. flow	20 l/min. (5 gpm)
Max. leakage: 10 cc/min. (0.6 in^3/min.) at 90% of pressure setting	
Weight	0.85 kg (1.87 lbs)
Manifold material	Aluminium
Note: aluminium bodies are often strong enough for operating pressures exceeding 210 bar (3000 psi), depending from the fatigue life expected in the specific application. If in doubt, consult our Service Network.	
Fluid	Mineral oil (HL, HLP) according DIN 51524
Fluid temperature range	-30 °C to 100 (-22 to 212 °F)
Viscosity range	5 to 800 mm^2/s (cSt)
Recommended degree of fluid contamination	Class 19/17/14 according to ISO 4406
Other technical data	see data sheet 18350-50

Note: for applications outside these parameters, please consult us.

Description

Initially, flow passes freely from P to REG. When the pressure at REG exceeds the pressure setting, the valve acts to restrict input flow at P. This increases the pressure drop through the valve and maintains consistent pressure at REG. The spring chamber is drained to prevent a build-up of back-pressure against the spool. Additionally, if pressure at REG rises above the pressure setting, flow is relieved to R (Tank) until the setting is re-attained.

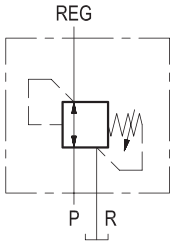

P = Inlet
REG = A (Reduced pressure)
R = T (Tank)

Characteristic curve

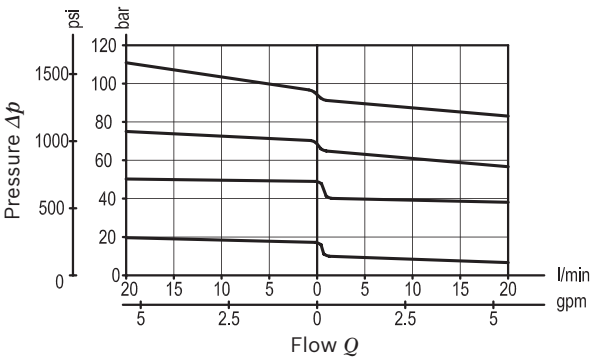

Dimensions [mm (inches)]

Ordering code

05.90.27	X	Y	Z

Pressure reducing and relieving direct acting spool type

Adjustments

03	Leakproof hex. socket screw

Port sizes	P	R	REG
02	G 3/8	G 3/8	G 3/8

	SPRINGS		
	Adj. pressure range bar (psi)	Pres. increase bar/turn (psi/turn)	Std. setting Q=5 (l/min) bar (psi)
02	2-21 (30-305)	3 (44)	10 (145)
04	3-42 (44-610)	5 (73)	20 (290)
06	7-63 (102-914)	8 (116)	30 (435)
10	11-105 (160-1525)	13 (189)	50 (725)

Tamper resistant cap
ordering code 11.04.23.002
Mat. no. R930000752

Preferred types

Type	Material number
05902703020200B	R930002585
05902703020400B	R930002587
05902703020600B	R930002588
05902703021000B	R930002589

Type	Material number

Dimensions

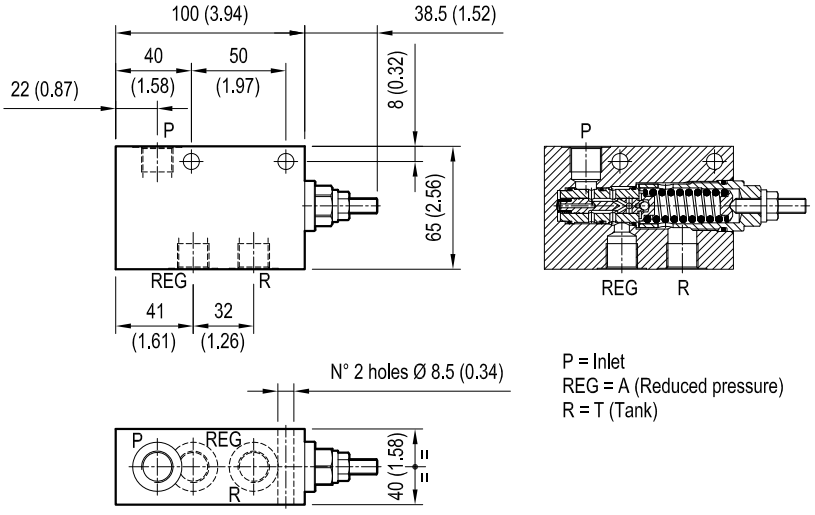

Pressure reducing and relieving, direct acting spool type, with free flow check valve

VRP-R-VU

05.90.19 - X - Y - Z

Technical data

Max. operating pressure	210 bar (3000 psi)
Max. flow	20 l/min. (5 gpm)
Max. leakage: 10 cc/min. (0.6 in^3/min.) at 90% of pressure setting	
Weight	1 kg (2.2 lbs)
Manifold material	Aluminium
Note: aluminium bodies are often strong enough for operating pressures exceeding 210 bar (3000 psi), depending from the fatigue life expected in the specific application. If in doubt, consult our Service Network.	
Fluid	Mineral oil (HL, HLP) according DIN 51524
Fluid temperature range	-30 °C to 100 (-22 to 212 °F)
Viscosity range	5 to 800 mm^2/s (cSt)
Recommended degree of fluid contamination	Class 19/17/14 according to ISO 4406
Other technical data	see data sheet 18350-50

Note: for applications outside these parameters, please consult us.

Description

Initially, flow passes freely from P to REG. When the pressure at REG exceeds the pressure setting, the valve acts to restrict input flow at P. This increases the pressure drop through the valve and maintains consistent pressure at REG. The spring chamber is drained to prevent a build-up of back-pressure against the spool. Additionally, if pressure at REG rises above the pressure setting, flow is relieved to R (Tank) until the setting is re-attained. A check valve allows quick emptying of REGULATED circuit when inlet pressure drops low.

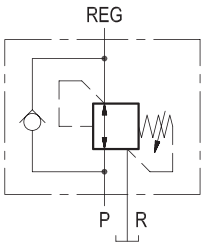

P = Inlet
REG = A (Reduced pressure)
R = T (Tank)

Characteristic curve

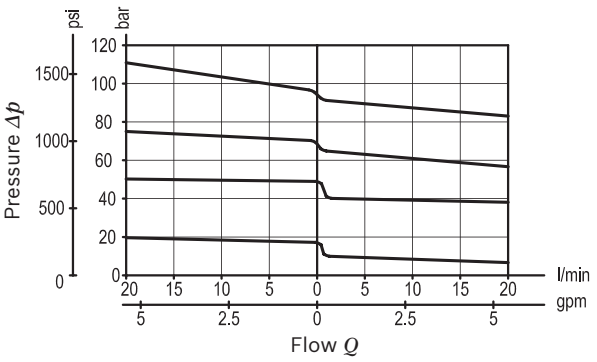

Dimensions [mm (inches)]

Ordering code

05.90.19	X	Y	Z

Pressure reducing and relieving
direct acting spool type
with free flow check valve

Adjustments

03	Leakproof hex. socket screw

Port sizes	P	R	REG
02	G 3/8	G 3/8	G 3/8

	SPRINGS		
	Adj. pressure range bar (psi)	Pres. increase bar/turn (psi/turn)	Std. setting Q=5 (l/min) bar (psi)
02	2-21 (30-305)	3 (44)	10 (145)
04	3-42 (44-610)	5 (73)	20 (290)
06	7-63 (102-914)	8 (116)	30 (435)
10	11-105 (160-1525)	13 (189)	50 (725)

Tamper resistant cap
ordering code 11.04.23.002
Mat. no. R930000752

Preferred types

Type	Material number
05901903020200B	R930002573
05901903020400B	R930002574
05901903020600B	R930002575
05901903021000B	R930002576

Type	Material number

Dimensions

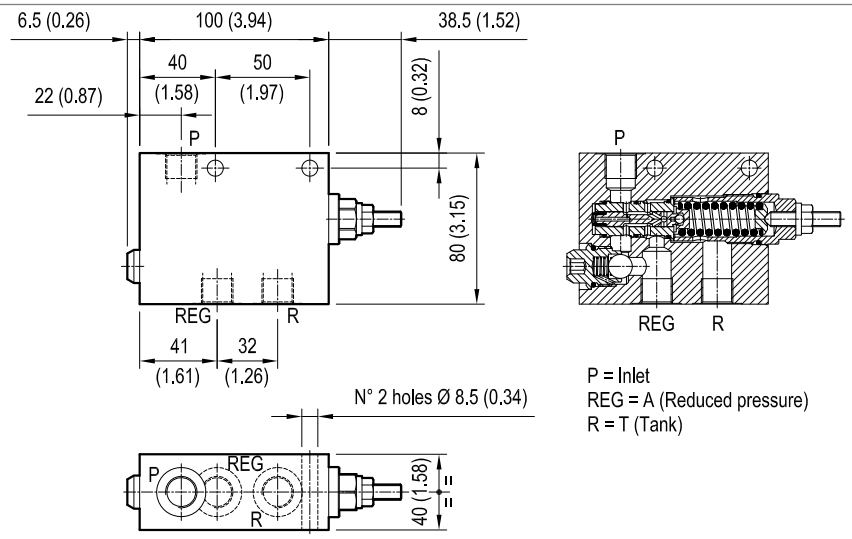

Pressure reducing, pilot operated spool type

VRPC-150 05.90.33 - X - Y - Z

Description

Initially, flow passes freely from P to REG. When the pressure at REG exceeds the pressure setting, the valve acts to restrict input flow at P. This increases the pressure drop through the valve and maintains consistent pressure at REG. The spring chamber is drained to prevent a build-up of back-pressure against the spool.

Technical data

Max. operating pressure	210 bar (3000 psi)
Max. flow	120 l/min. (32 gpm)
Standard internal orefice: 0.6 mm	
Weight	1 kg (2.2 lbs)
Manifold material	Aluminium
Note: aluminium bodies are often strong enough for operating pressures exceeding 210 bar (3000 psi), depending from the fatigue life expected in the specific application. If in doubt, consult our Service Network.	
Fluid	Mineral oil (HL, HLP) according DIN 51524
Fluid temperature range	-30 °C to 100 (-22 to 212 °F)
Viscosity range	10 to 500 mm^2/s (cSt)
Recommended degree of fluid contamination	Class 19/17/14 according to ISO 4406
Other technical data	see data sheet 18350-50

Note: for applications outside these parameters, please consult us.

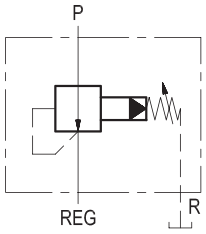

P = Inlet
REG = A (Reduced pressure)
R = T (Tank)

Characteristic curve

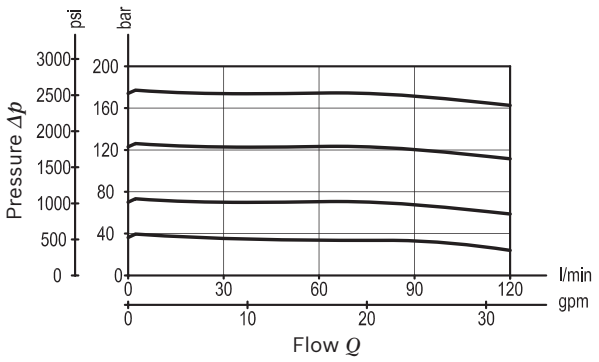

RE 18305-74/03.2010 Bosch Rexroth AG Control Systems

413

Dimensions [mm (inches)]

Ordering code

05.90.33	X	Y	Z

Pressure reducing
pilot operated spool type

Adjustments

03	Leakproof hex. socket screw
04	Handknob and locknut

Port sizes	P	R	REG
03	G 1/2	G 1/4	G 1/2
04	G 3/4	G 1/4	G 3/4

	SPRINGS		
	Adj. pressure range bar (psi)	Pres. increase bar/turn (psi/turn)	Std. setting Q=5 (l/min) bar (psi)
20	20-210 (290-3000)	32 (464)	100 (1450)

Preferred types

Type	Material number
05903303032000A	R930002598
05903303042000A	R930002599
05903304032000A	R930002600
05903304042000A	R930002601

Type	Material number

Dimensions

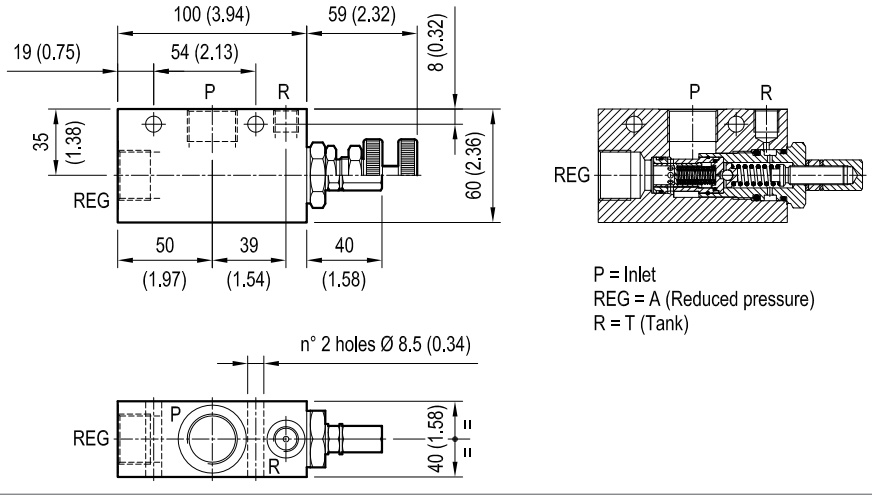

Load holding/motion control

Auxiliary valves: sequence

Designation	Description	Ports	Code	Data sheet	Page
Sequence, direct acting poppet type	VSQ-10	G 1/4	052106XYZ	18309-84	417
Sequence, direct acting poppet type	VSQ-30	G 3/8, G 1/2	052107XYZ	18309-85	419
Sequence, pilot operated spool type	VSQP-150	G 1/2, G 3/4	052115XYZ	18309-86	421
Sequence, direct acting poppet type, compensated	VSQ-CC-30	G 3/8, G 1/2	052111XYZ	18309-87	423
Sequence, pilot operated spool type, compensated	VSQP-CC-150	G 1/2, G 3/4	052406XYZ	18309-88	425

Sequence, direct acting poppet type

VSQ-10

05.21.06 - X - Y - Z

Description

Initially, the flow goes to a side line connected to V1, not shown here, and energizes a first actuator until pressure increases to meet the selected valve setting; then flow opens the relief cartridge and passes from V1 to C1 energizing the second actuator connected to C1. Note that pressure at C1, i.e. the pressure needed to operate the second actuator, is additive to the relief setting of the valve. The check valve allows reverse flow, from C1 to V1.

Technical data

Operating pressure	up to 210 bar (3000 psi)
Max. flow	10 l/min. (3 gpm)
Pressure drop curves are shown with zero black pressure on “C1” port. This valve is successfully employed to energize a secondary actuator which only requires low pressure and low flow (for example: a sliding safety bolt).	
Weight	0.3 kg (0.66 lbs)
Manifold material	Aluminium
Note: aluminium bodies are often strong enough for operating pressures exceeding 210 bar (3000 psi), depending from the fatigue life expected in the specific application. If in doubt, consult our Service Network.	
Fluid	Mineral oil (HL, HLP) according DIN 51524
Fluid temperature range	-30 °C to 100 (-22 to 212 °F)
Viscosity range	10 to 500 mm^2/s (cSt)
Recommended degree of fluid contamination	Class 19/17/14 according to ISO 4406
Other technical data	see data sheet 18350-50

Note: for applications outside these parameters, please consult us.

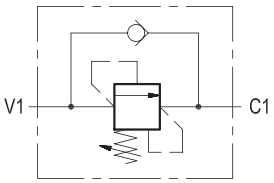

Characteristic curve

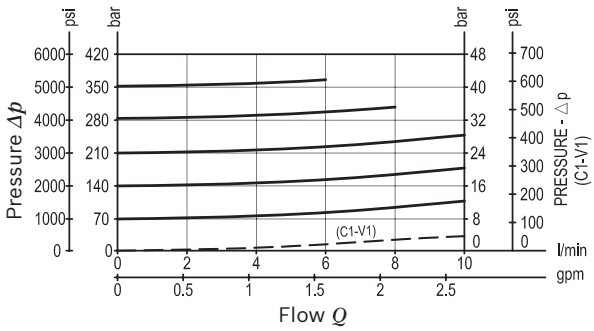

Dimensions [mm (inches)]

Ordering code

05.21.06	X	Y	Z

Sequence
direct acting poppet type

Adjustments

03	Leakproof hex. socket screw

Port sizes	V1	C1	
09	G 1/4	G 1/4	

	SPRINGS		
	Adj. pressure range bar (psi)	Pres. increase bar/turn (psi/turn)	Std. setting Q=5 (l/min) bar (psi)
10	35-140 (500-2000)	48 (696)	100 (1450)
20	70-280 (1000-4000)	88 (1276)	200 (2900)
35	140-420 (2000-6000)	140 (2030)	350 (5000)

Tamper resistant cap
ordering code 11.04.23.003
Mat. no. R930000754

Preferred types

Type	Material number
05210603091000A	R930001413
05210603092000B	R930001416
05210603093500A	R930001417

Type	Material number

Dimensions

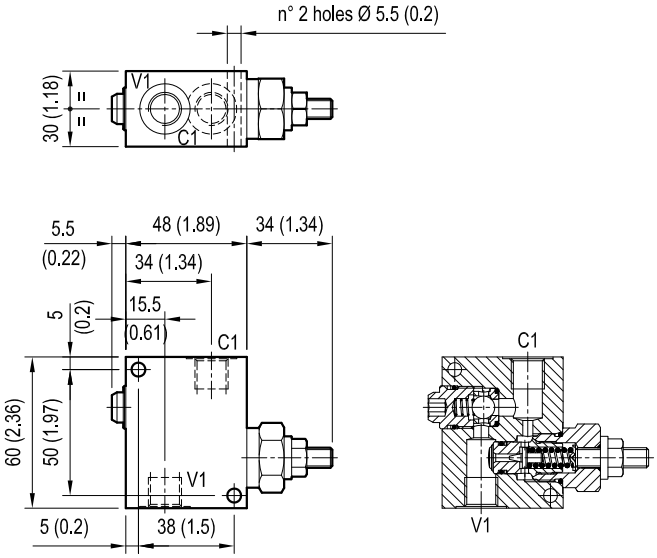

Sequence, direct acting poppet type

VSQ-30

05.21.07 - X - Y - Z

Description

Initially, the flow goes to a side line connected to V1, not shown here, and energizes a first actuator until pressure increases to meet the selected valve setting; then flow opens the relief cartridge and passes from V1 to C1 energizing the second actuator connected to C1. Note that pressure at C1, i.e. the pressure needed to operate the second actuator, is additive to the relief setting of the valve. The hydraulic damping of the relief poppet provides enhanced stability at all flows. The check valve allows reverse flow, from C1 to V1.

Technical data

Operating pressure	up to 210 bar (3000 psi)
Max. flow	30 l/min. (8 gpm)
Pressure drop curves are shown with zero black pressure on “C1” port. This valve is successfully employed when the pressure needed to move the secondary actuator is not very high.	
Weight	0.81 kg (1.79 lbs)
Manifold material	Aluminium
Note: aluminium bodies are often strong enough for operating pressures exceeding 210 bar (3000 psi), depending from the fatigue life expected in the specific application. If in doubt, consult our Service Network.	
Fluid	Mineral oil (HL, HLP) according DIN 51524
Fluid temperature range	-30 °C to 100 (-22 to 212 °F)
Viscosity range	10 to 500 mm^2/s (cSt)
Recommended degree of fluid contamination	Class 19/17/14 according to ISO 4406
Other technical data	see data sheet 18350-50

Note: for applications outside these parameters, please consult us.

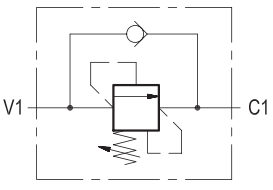

Characteristic curve

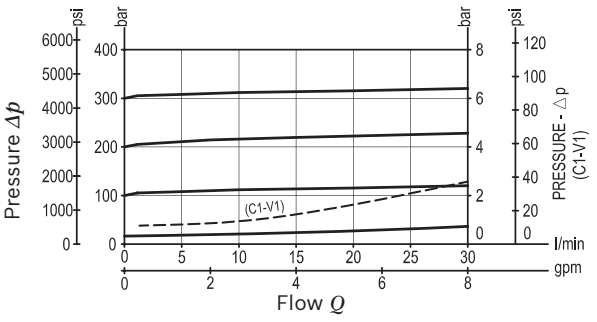

Dimensions [mm (inches)]

Ordering code

05.21.07	X	Y	Z

Sequence
direct acting poppet type

Adjustments

03	Leakproof hex. socket screw

Port sizes	V1	C1	
02	G 3/8	G 3/8	
03	G 1/2	G 1/2	

	SPRINGS		
	Adj. pressure range bar (psi)	Pres. increase bar/turn (psi/turn)	Std. setting Q=5 (l/min) bar (psi)
05	5-50 (75-725)	12 (174)	50 (725)
10	30-100 (435-1450)	24 (348)	100 (1450)
20	50-210 (725-3000)	47 (682)	200 (2900)
35	100-350 (1450-5000)	82 (1189)	350 (5000)

Tamper resistant cap
ordering code 11.04.23.003
Mat. no. R930000754

Preferred types

Type	Material number
052107030205000	R930001418
052107030210000	R930001419
052107030220000	R930001420
052107030235000	R930001421

Type	Material number
052107030305000	R930001423
052107030310000	R930001424
052107030320000	R930001425
052107030335000	R930001428

Dimensions

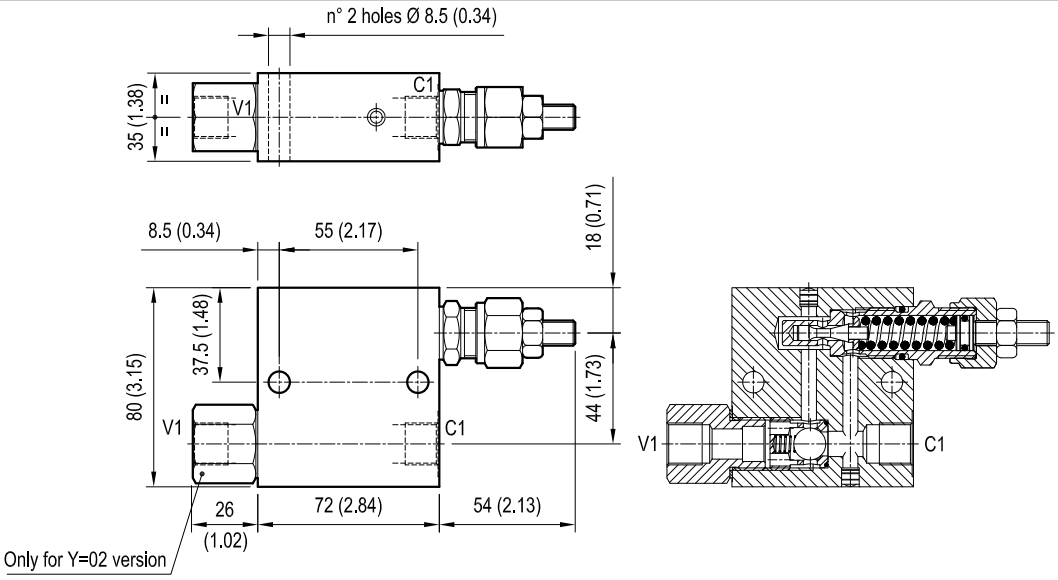

Sequence, pilot operated spool type

VSQP-150

05.21.15 - X - Y - Z

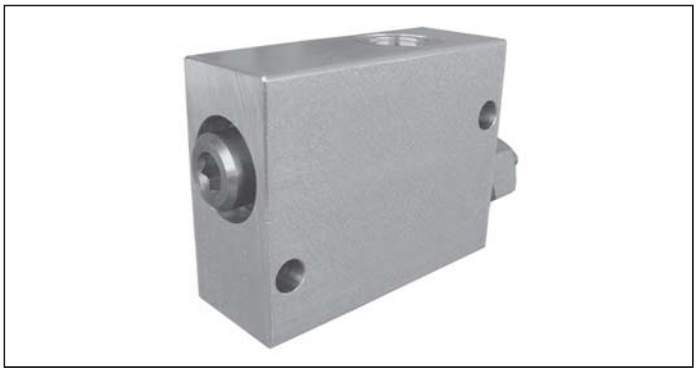

Description

Initially, the flow goes to a side line connected to V1, not shown here, and energizes a first actuator until pressure increases to meet the selected valve setting; then flow opens the relief cartridge and passes from V1 to C1 energizing the second actuator connected to C1. The relief cartridge is pilot operated and combines stability with low pressure drop. Note that pressure at C1, i.e. the pressure needed to operate the second actuator, is additive to the relief setting of the valve. The check valve allows reverse flow, from C1 to V1.

Technical data

Operating pressure	up to 210 bar (3000 psi)
Max. flow	150 l/min. (40 gpm)
Leakage: 100 cc/min. (6 in^3/min.) at max relief setting.	
Pressure drop curves are shown with zero black pressure on “C1” port. This valve is successfully employed when the pressure needed to move the secondary actuator is not very high.	
Weight	1.07 kg (2.4 lbs)
Manifold material	Aluminium
Note: aluminium bodies are often strong enough for operating pressures exceeding 210 bar (3000 psi), depending from the fatigue life expected in the specific application. If in doubt, consult our Service Network.	
Fluid	Mineral oil (HL, HLP) according DIN 51524
Fluid temperature range	-30 °C to 100 (-22 to 212 °F)
Viscosity range	10 to 500 mm^2/s (cSt)
Recommended degree of fluid contamination	Class 19/17/14 according to ISO 4406
Other technical data	see data sheet 18350-50

Note: for applications outside these parameters, please consult us.

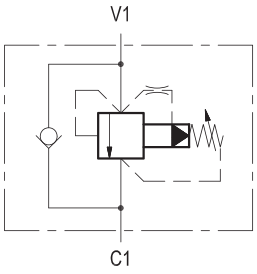

Characteristic curve

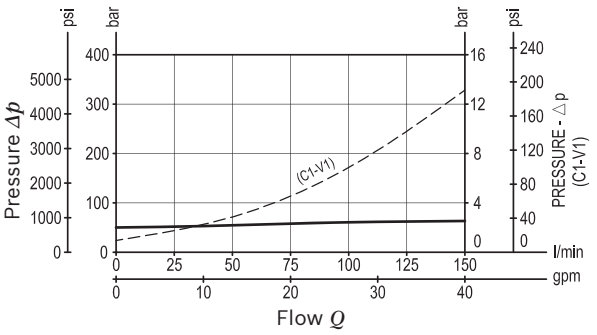

Dimensions [mm (inches)]

Ordering code

05.21.15	X	Y	Z

Sequence
pilot operated spool type

Adjustments

03	Leakproof hex. socket screw

	SPRINGS		
	Adj. pressure range bar (psi)	Pres. increase bar/turn (psi/turn)	Std. setting Q=5 (l/min) bar (psi)
05	3-70 (44-1000)	20 (290)	50 (725)

Tamper resistant cap
ordering code 11.04.23.004
Mat. no. R930001411

Port sizes	V1	C1	
03	G 1/2	G 1/2	
04	G 3/4	G 3/4	

Preferred types

Type	Material number
052115030305000	R930001438
052115030405000	R930001953

Type	Material number

Dimensions

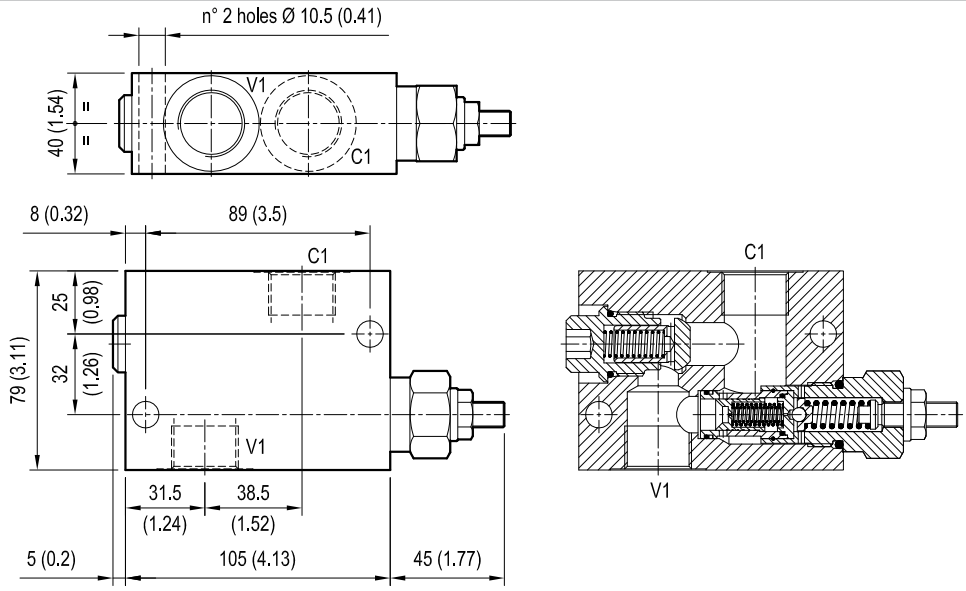

Sequence, direct acting poppet type, compensated

VSQ-CC-30 05.21.11 - X - Y - Z

Description

Initially, the flow goes to a side line connected to V1, not shown here, and energizes a first actuator until pressure increases to meet the selected valve setting; then flow opens the relief cartridge and passes from V1 to C1 energizing the second actuator connected to C1. The valve applies a balanced relief piston allowing relief operation at the valve setting independent of back-pressure at C1. With line pressure equal or higher than setting, after valve opening, the full pressure is transferred from V1 to C1 and to the second actuator. The hydraulic damping of the relief piston provides enhanced stability at all flows. The check valve allows reverse flow, from C1 to V1.

Technical data

Operating pressure	up to 210 bar (3000 psi)
Max. flow	30 l/min. (8 gpm)
For a good performance, the pressure in the secondary circuit should not drop below 20 bar.	
Weight	0.81 kg (1.79 lbs)
Manifold material	Aluminium
Note: aluminium bodies are often strong enough for operating pressures exceeding 210 bar (3000 psi), depending from the fatigue life expected in the specific application. If in doubt, consult our Service Network.	
Fluid	Mineral oil (HL, HLP) according DIN 51524
Fluid temperature range	-30 °C to 100 (-22 to 212 °F)
Viscosity range	10 to 500 mm^2/s (cSt)
Recommended degree of fluid contamination	Class 19/17/14 according to ISO 4406
Other technical data	see data sheet 18350-50

Note: for applications outside these parameters, please consult us.

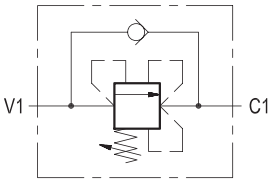

Characteristic curve

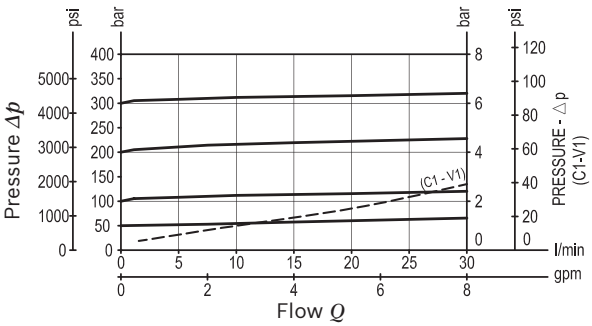

Dimensions [mm (inches)]

Ordering code

05.21.11	X	Y	Z

Sequence
direct acting poppet type, compensated

Adjustments

03 Leakproof inner hex. socket screw

Port sizes	V1	C1	
02	G 3/8	G 3/8	
03	G 1/2	G 1/2	

	SPRINGS		
	Adj. pressure range bar (psi)	Pres. increase bar/turn (psi/turn)	Std. setting Q=5 (l/min) bar (psi)
05	5-50 (75-725)	11 (160)	50 (725)
10	30-100 (435-1450)	23 (334)	100 (1450)
20	50-210 (725-3000)	47 (682)	200 (2900)
35	100-350 (1450-5000)	82 (1189)	350 (5000)

Preferred types

Type	Material number
05211103020500B	R930001429
05211103021000B	R930001430
05211103022000B	R930001431
05211103023500B	R930001432

Type	Material number
05211103030500B	R930001433
05211103031000B	R930001434
05211103032000B	R930001435
05211103033500B	R930001437

Dimensions

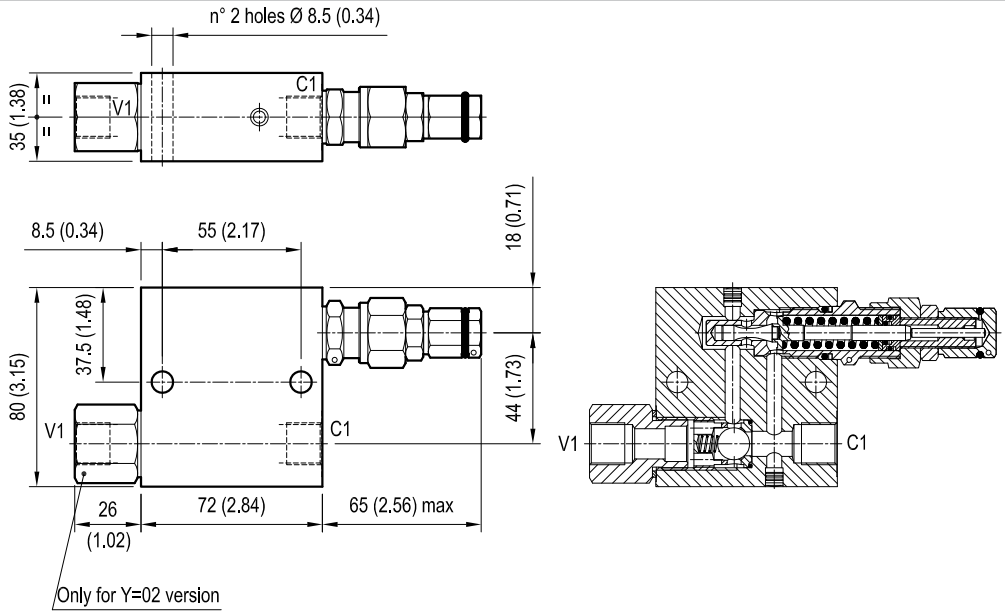

Sequence, pilot operated spool type, compensated

VSQP-CC-150

05.24.06 - X - Y - Z

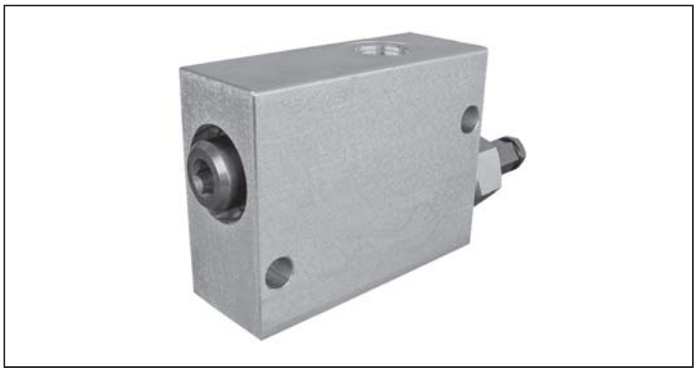

Description

Initially, the flow goes to a side line connected to V1, not shown here, and energizes a first actuator until pressure increases to meet the selected valve setting; then flow opens the relief cartridge and passes from V1 to C1 energizing the second actuator connected to C1. The valve applies a balanced relief piston allowing relief operation at the valve setting independent of back-pressure at C1. With line pressure equal or higher than setting, after valve opening, the full pressure is transferred from V1 to C1 and to the second actuator. The check valve allows reverse flow, from C1 to V1.

Technical data

Operating pressure	up to 210 bar (3000 psi)
Max. flow	150 l/min. (40 gpm)
Leakage: 100 cc/min. (6 in^3/min.) at max. relief setting	
For a good performance, the pressure in the secondary circuit should not drop below 20 bar (290 psi).	
Weight	1.1 kg (2.4 lbs)
Manifold material	Aluminium
Note: aluminium bodies are often strong enough for operating pressures exceeding 210 bar (3000 psi), depending from the fatigue life expected in the specific application. If in doubt, consult our Service Network.	
Fluid	Mineral oil (HL, HLP) according DIN 51524
Fluid temperature range	-30 °C to 100 (-22 to 212 °F)
Viscosity range	10 to 500 mm^2/s (cSt)
Recommended degree of fluid contamination	Class 19/17/14 according to ISO 4406
Other technical data	see data sheet 18350-50

Note: for applications outside these parameters, please consult us.

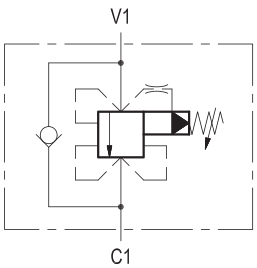

Characteristic curve

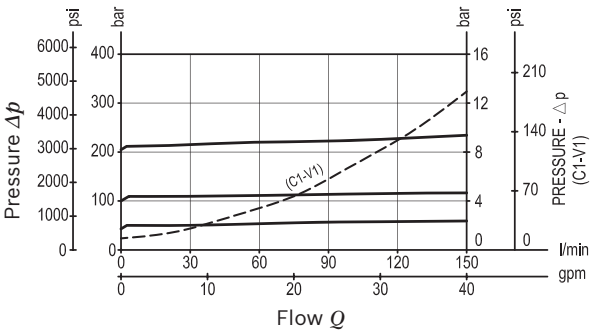

Dimensions [mm (inches)]

Ordering code

05.24.06	X	Y	Z

Sequence
pilot operated spool type, compensated

Adjustments

03	Leakproof hex. socket screw

	SPRINGS		
	Adj. pressure range bar (psi)	Pres. increase bar/turn (psi/turn)	Std. setting Q=5 (l/min) bar (psi)
20	10-210 (145-3000)	35 (508)	200 (2900)

Tamper resistant cap
ordering code 03.05.01.004
Mat. no. R930023246

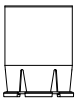

Port sizes	V1	C1	
03	G 1/2	G 1/2	
04	G 3/4	G 3/4	

Preferred types

Type	Material number
052406030320000	R930001501
052406030420000	R930001503

Type	Material number

Dimensions

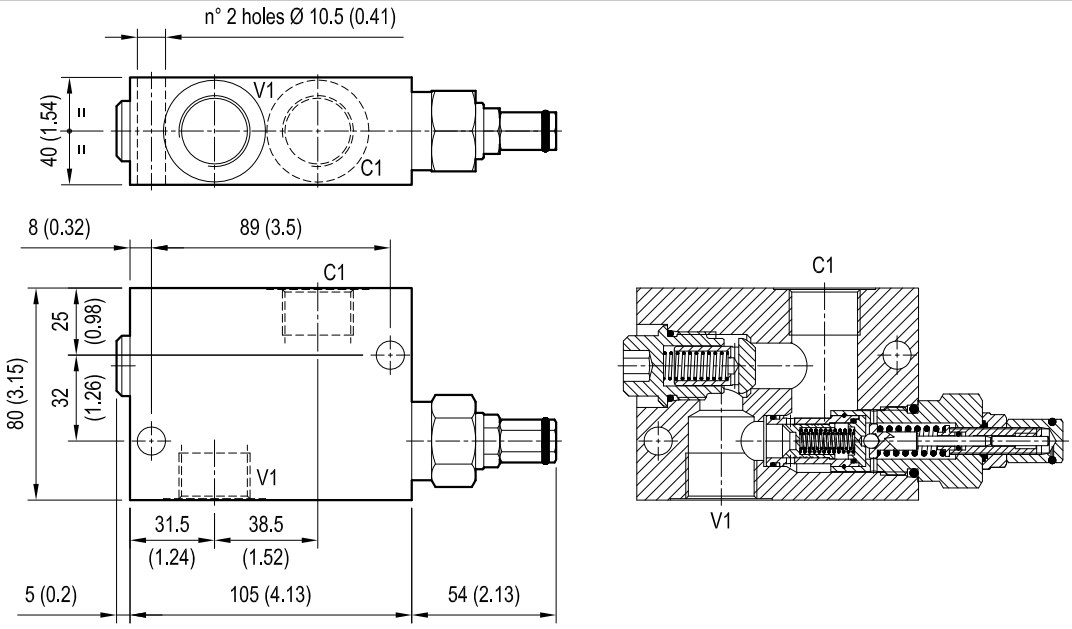

Load holding/motion control

Auxiliary valves: shuttle

Designation	Description	Ports	Code	Data sheet	Page
Shuttle valve	VFC	G 1/4	05990500Y	18309-98	429

Shuttle valve

VFC

05.99.05.00 - Y

Description

Single ball shuttle valve with 3 ports for in-line plumbing: when the ports V1 and V2 are connected to 2 work lines, the valve delivers the highest of the 2 pressures to the common port C. The single ball allows for the decay of the pressure signal when both work ports drop to a lower pressure level.

Technical data

Operating pressure	up to 210 bar (3000 psi)
Max. flow	50 l/min. (13 gpm)
Weight	0.17 kg (0.38 lbs)
Manifold material	Aluminium
Note: aluminium bodies are often strong enough for operating pressures exceeding 210 bar (3000 psi), depending from the fatigue life expected in the specific application. If in doubt, consult our Service Network.	
Fluid	Mineral oil (HL, HLP) according DIN 51524
Fluid temperature range	-30 °C to 100 (-22 to 212 °F)
Viscosity range	5 to 800 mm^2/s (cSt)
Recommended degree of fluid contamination	Class 19/17/14 according to ISO 4406
Other technical data	see data sheet 18350-50

Note: for applications outside these parameters, please consult us.

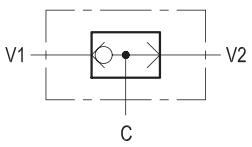

Characteristic curve

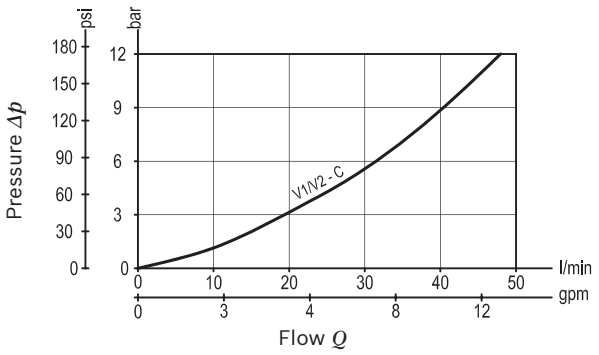

RE 18300-98/03.2013 Bosch Rexroth AG Control Valves

Dimensions [mm (inches)]

Ordering code

05.99.05.00	Y

Shuttle valve

Port sizes	C	V1 - V2
09	G 1/4	G 1/4

Preferred types

Type	Material number
05990500090000A	R930002701

Type	Material number

Dimensions

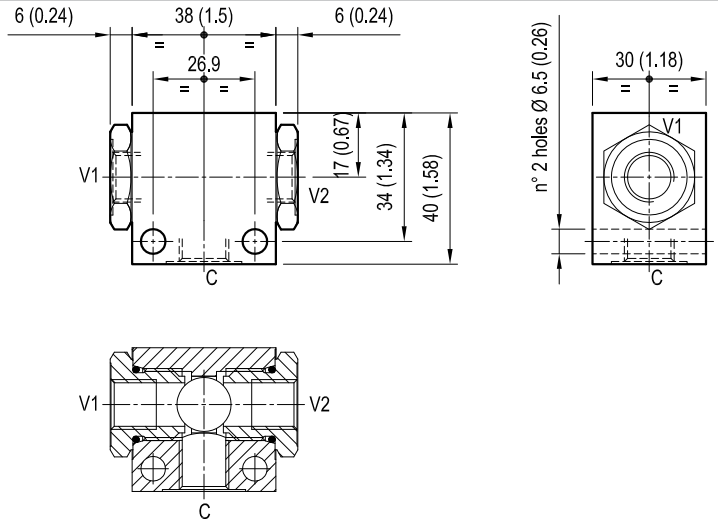

Load holding/motion control

Special valves

Designation	Description	Ports	Code	Data sheet	Page
Automatic shut-off	VEM	G 1/4	059803XYZ	18310-10	433
Pilot operated unloading	BM-N	G 1/2, G 3/4	059304XYZ	18310-11	435
Pump unloading	VEP-VSP2	G 3/4	059006XYZ	18310-13	437
Purge valve for hydrostatic trasmission	A-VSL-R	G 3/4, G 1	08640500Y	18310-18	439
Automatic directional	V.LC2-IA12	F10	L5235X...	18310-24	441

Automatic shut-off

VEM

05.98.03 - X - Y - Z

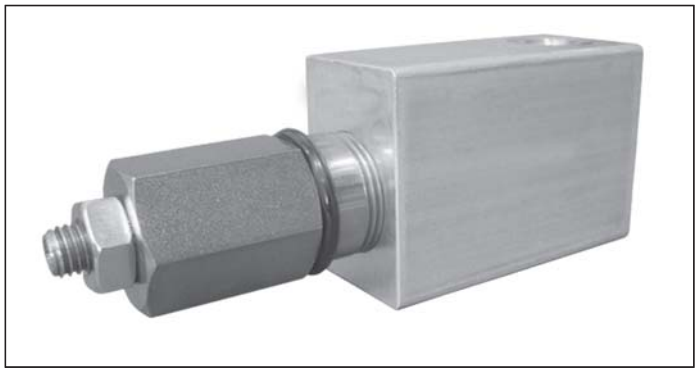

Technical data

Operating pressure	up to 210 bar (3000 psi)
Max. flow	15 l/min. (4 gpm)
Weight	0.66 kg (1.46 lbs)
Manifold material	Anodized aluminium
Note: aluminium bodies are often strong enough for operating pressures exceeding 210 bar (3000 psi), depending from the fatigue life expected in the specific application. If in doubt, consult our Service Network.	
Fluid	Mineral oil (HL, HLP) according DIN 51524
Fluid temperature range	-30 °C to 100 (-22 to 212 °F)
Viscosity range	5 to 800 mm^2/s (cSt)
Recommended degree of fluid contamination	Class 19/17/14 according to ISO 4406
Other technical data	see data sheet 18350-50

Note: for applications outside these parameters, please consult us.

Description

It is intended for protection of a pressure gauge M connected to a pressure line P; the valve blocks excess pressure to the instrument M, preventing calibration failure, internal damage, and “blow-out” from over-ranging – a principal cause of instrument failure. The valve is normally open, and positively closes, without chattering, when the adjusted pressure threshold is reached; a pressure reduction at P port below the set value will automatically re-open the valve, without requiring external re-setting.

Note: port identified with M are not protected with calibrated orifice but in direct connection with pressure channels.

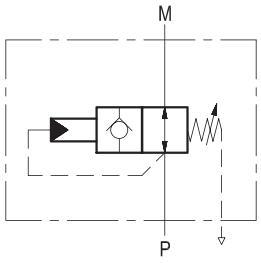

Characteristic curve

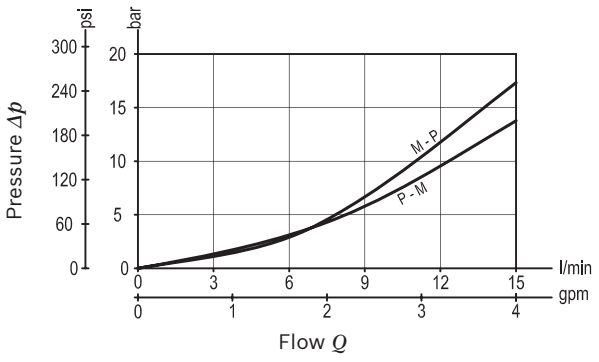

Dimensions [mm (inches)]

Ordering code

05.98.03	X	Y	Z

Automatic shut-off

Adjustments

03	Leakproof hex. socket screw

Port sizes	P	M	
09	G 1/4	G 1/4	

	SPRINGS		
	Adj. pressure range bar (psi)	Pres. increase bar/turn (psi/turn)	Std. setting Q=5 (l/min) bar (psi)
05	15-50 (220-725)	15.5 (225)	50 (725)
10	35-100 (500-1450)	33 (479)	100 (1450)
20	80-210 (1150-3000)	68 (986)	200 (2900)
35	180-350 (2600-5000)	100 (1450)	350 (5000)

Preferred types

Type	Material number
059803030905000	R930002694
059803030910000	R930002695
059803030920000	R930002696
059803030935000	R930002698

Type	Material number

Dimensions

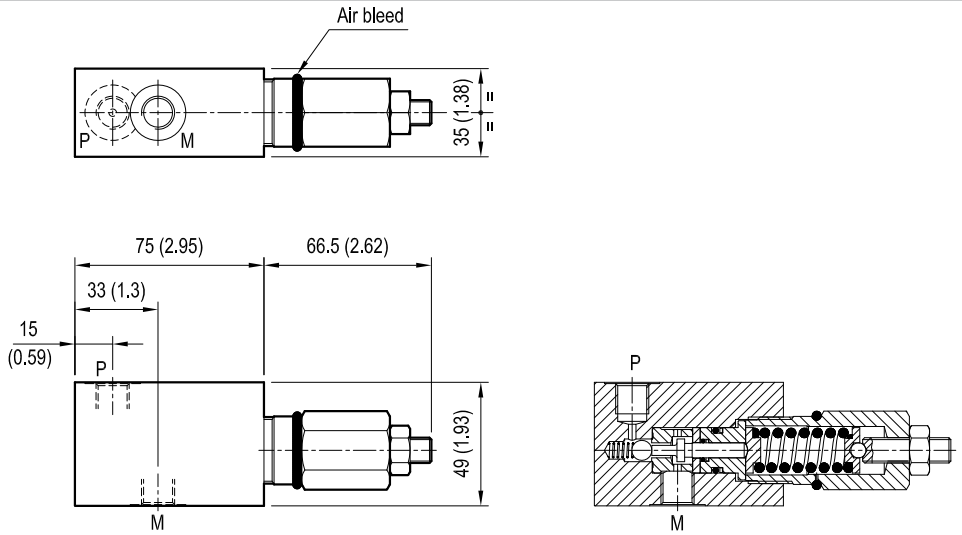

Pilot operated unloading

BM-N

05.93.04 - X - Y - Z

Technical data

Operating pressure	up to 210 bar (3000 psi)
Max. flow	200 l/min. (53 gpm)
Weight	see “Dimensions”
Manifold material	Aluminium
Note: aluminium bodies are often strong enough for operating pressures exceeding 210 bar (3000 psi), depending from the fatigue life expected in the specific application. If in doubt, consult our Service Network.	
Fluid	Mineral oil (HL, HLP) according DIN 51524
Fluid temperature range	-30 °C to 100 (-22 to 212 °F)
Viscosity range	5 to 800 mm^2/s (cSt)
Recommended degree of fluid contamination	Class 19/17/14 according to ISO 4406
Other technical data	see data sheet 18350-50

Note: for applications outside these parameters, please consult us.

Description

This valve unloads a pump or a pressure line to tank when a pilot pressure is reached. Flow from P to T is normally blocked by the main spool; when pressure at Pil increases, and reaches the selected setting, it displaces the pilot piston and exhausts to tank the spring side of the main spool allowing it to shift and to open the flow unloading path from P to T. Back-pressure at T is additive to the unloading setting of the valve.

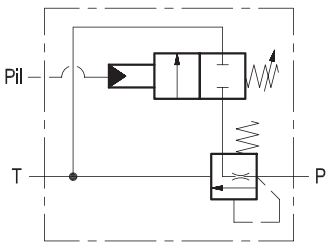

Characteristic curve

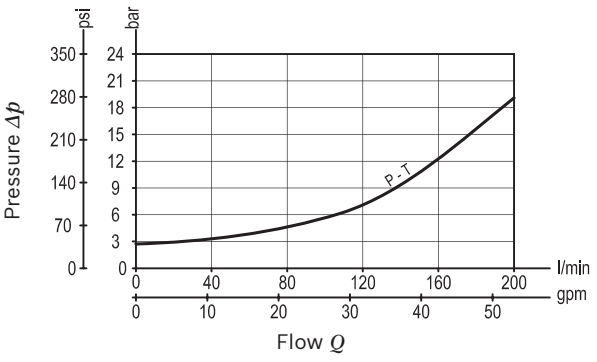

Dimensions [mm (inches)]

Ordering code

05.93.04	X	Y	Z

Pilot operated unloading

Adjustments

03	Leakproof hex. socket screw

Port sizes	P	T	Pil
03	G 1/2	G 1/2	G 1/4
04	G 3/4	G 3/4	G 1/4

	SPRINGS		
	Adj. pressure range bar (psi)	Pres. increase bar/turn (psi/turn)	Std. setting Q=5 (l/min) bar (psi)
05	10-50 (145-725)	12 (174)	50 (725)
10	20-100 (290-1450)	24 (348)	100 (1450)
20	50-200 (725-2900)	47 (682)	200 (2900)
35	100-300 (1450-4350)	83 (1204)	300 (4350)

Preferred types

Type	Material number
05930403030500A	R930059060
05930403031000A	R930059068
05930403032000A	R930059080
05930403033500A	R930059158

Type	Material number
05930403040500A	R930059061
05930403041000A	R930059069
05930403042000A	R930059081
05930403043500A	R930059160

Dimensions

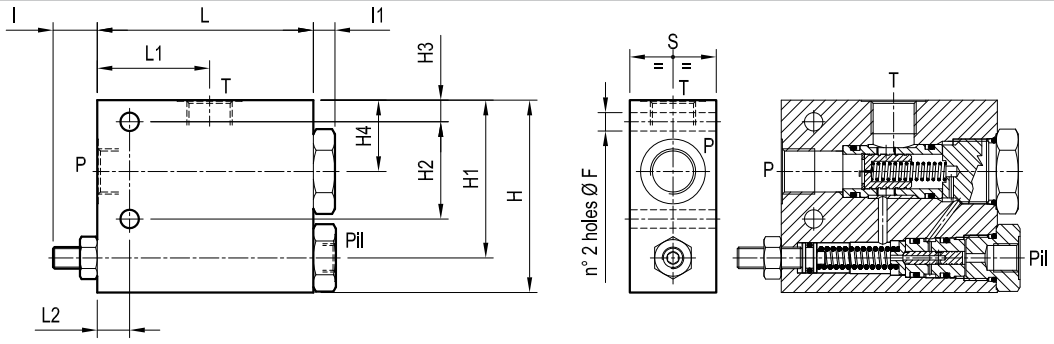

40 (1.58)	15 (0.59)	52 (2.05)	100 (3.94)	10 (2.15)	21 (0.83)	49 (1.93)	25 (0.98)	45 (1.77)	89 (3.5)	105 (4.13)			8.5 (0.34)		G 3/4	1.35 (2.98)
40 (1.58)	15 (0.59)	52 (2.05)	100 (3.94)	10 (2.15)	21 (0.83)	33 (1.3)	10 (0.39)	45 (1.77)	73 (2.87)	89 (3.5)			8.5 (0.34)		G 1/2	1.3 (2.87)
S	L2	L1	L	I1	I	H4	H3	H2	H1	H			F		Y	Weight kg (lbs)

Pump unloading

VEP-VSP2

05.90.06 - X - Y - Z

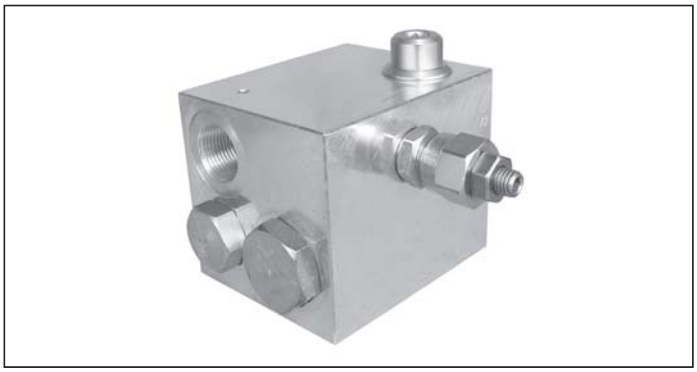

Technical data

Operating pressure	P1 = 100 bar (1450 psi) P2 = 210 bar (3000 psi)
Max. flow of valve 2	30 l/min. (8 gpm)
Weight	2.5 kg (5.5 lbs)
Manifold material	Aluminium
Note: aluminium bodies are often strong enough for operating pressures exceeding 210 bar (3000 psi), depending from the fatigue life expected in the specific application. If in doubt, consult our Service Network.	
Fluid	Mineral oil (HL, HLP) according DIN 51524
Fluid temperature range	-30 °C to 100 (-22 to 212 °F)
Viscosity range	10 to 500 mm^2/s (cSt)
Recommended degree of fluid contamination	Class 19/17/14 according to ISO 4406
Other technical data	see data sheet 18350-50

Note: for applications outside these parameters, please consult us.

Description

Through the check valve, the pump inlet P1 is combined to the inlet P2 to give maximum flow out of C at low pressure. As load pressure (C) increases and reaches the selected unloading setting, the pilot piston (1) is displaced and exhausts to tank the spring chamber of the main spool allowing P1 pump to be by-passed to tank. Above this pressure threshold, only P2 pump continues to deliver oil out of C, with a resulting reduced flow at high pressure. The incorporated relief cartridge (2) provides protection by limiting the maximum pressure in the system line (C).

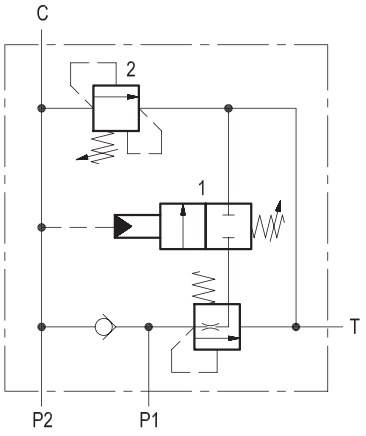

Characteristic curve

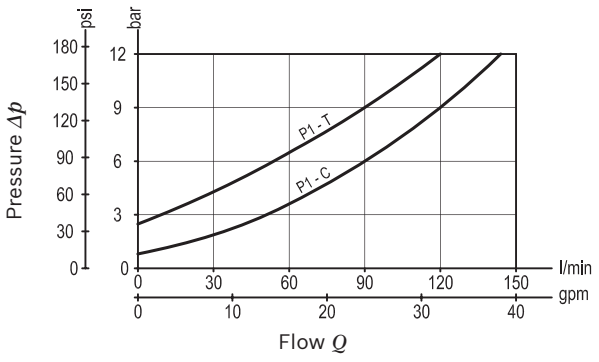

Dimensions [mm (inches)]

Ordering code

05.90.06	X	Y	Z

Pump unloading

Adjustments

03	Leakproof hex. socket screw

Port sizes	P1 - P2	C	T
04	G 3/4	G 3/4	G 3/4

		SPRINGS		
		Adj. pressure range bar (psi)	Pres. increase bar/turn (psi/turn)	Std. setting Q=5 (l/min.) bar (psi)
20	Valve 1	20-100 (290-1450)	24 (348)	50 (725)
	Valve 2	50-210 (725-3000)	47 (682)	200 (2900)
35	Valve 1	20-100 (290-1450)	24 (348)	50 (725)
	Valve 2	100-350 (1450-5000)	82 (1189)	300 (4350)

Tamper resistant cap
ordering code 11.04.23.003
Mat. no. R930000754

Preferred types

Type	Material number
05900603042000A	R930059057
05900603043500A	R930059058

Type	Material number

Dimensions

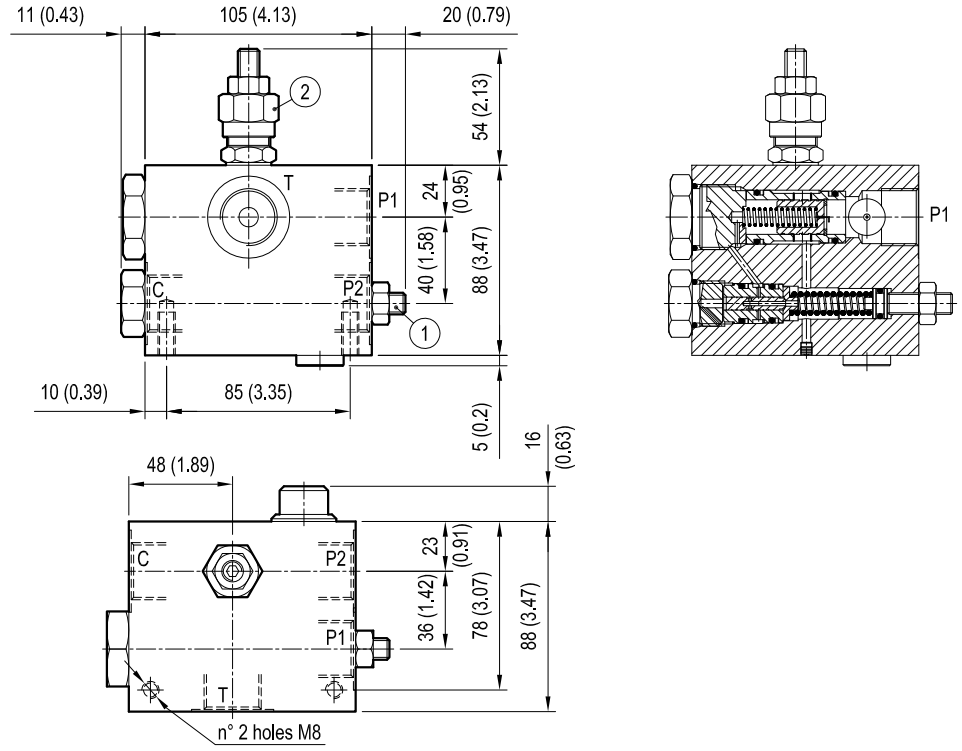

Purge valve for hydrostatic transmission

A-VSL-R

08.64.05.00 - Y

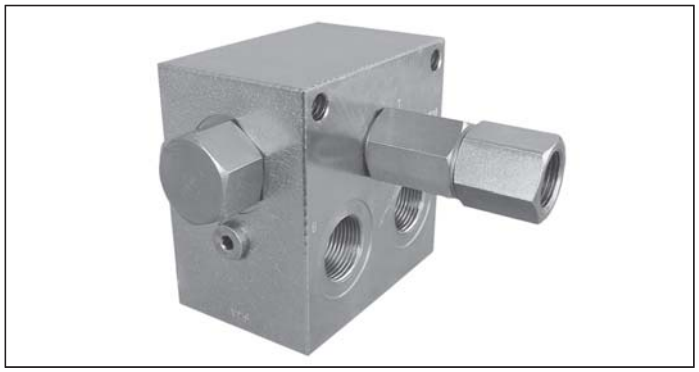

Description

The inlets A-A and B-B are connected to and crossed by the pressure lines of a closed loop hydraulic transmission. As pressure rises in either line, the internally piloted 3-way/3-positions spool opens the lower pressure line to tank through the purge relief valve (1). This allows a portion of the charge pump flow to be exhausted to tank after the oil has done its work, and allows an identical volume of fresh oil to get into the closed loop system. When the directional control (and the motion) is reversed, the spool switches in the opposite direction, maintaining hot oil exhaust. A closed by-pass (2) is fitted between ports A and B: if opened it allows to rotate the motor without hydraulic power, for example if the machine needs towing.

Technical data

Max. operating pressure	350 bar (5000 psi)
Exhaust flow capacity: 90 l/min (24 gpm) suitable for use in transmission circuits up to 450 l/min (120 gpm), if the re-newed oil needs to be at least 20% of the maximum main flow.	
Pressure setting of the purge relief valve (1): it can be made through the threaded adjuster reachable after unscrewing the outmost portion of the Tank hexagon sleeve (refer to the SPRINGS table for details). By-pass screw (2): it can be opened if the transmission motor or pump need to be rotated when the machine is not in operation; normally, the by-pass must be locked down and stay closed for correct performance of the transmission.	
Weight	4.7 kg (10.4 lbs)
Manifold material	Zinc plated steel
Fluid	Mineral oil (HL, HLP) according DIN 51524
Fluid temperature range	-30 °C to 100 (-22 to 212 °F)
Viscosity range	10 to 500 mm^2/s (cSt)
Recommended degree of fluid contamination	Class 19/17/14 according to ISO 4406
Other technical data	see data sheet 18350-50

Note: for applications outside these parameters, please consult us.

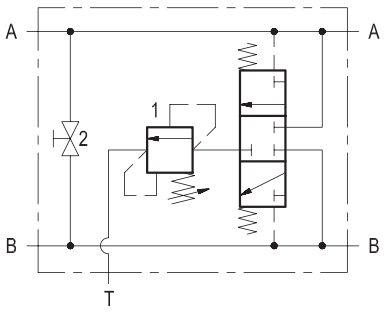

Characteristic curve

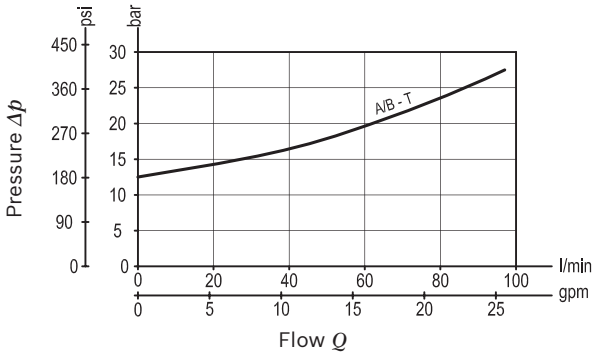

RE 18310-18/03.2013 Bosch Rexroth AG Control Valves

Dimensions [mm (inches)]

Ordering code

08.64.05.00	Y

Purge valve for hydrostatic transmission

SPRINGS		
Adj. pressure range bar (psi)	Pres. increase bar/turn (psi/turn)	Std. setting bar (psi) cracking press.
5-25 (75-365)	6 (87)	12 (175)

Port sizes	A	B	T
04	G 3/4	G 3/4	G 1/2
05	G 1	G 1	G 1/2

Preferred types

Type	Material number
086405000400000	R930004091
086405000500000	R930004092

Type	Material number

Dimensions

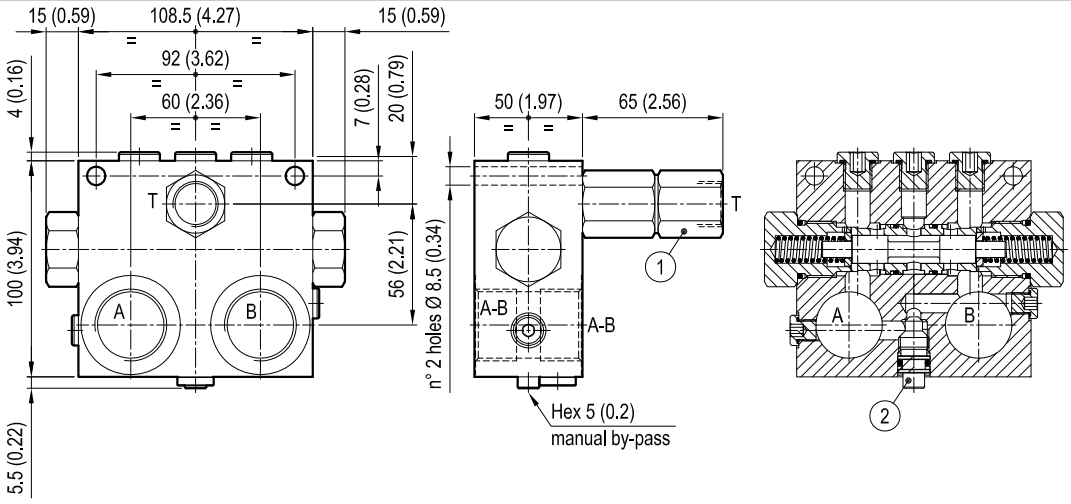

Automatic directional

V.LC2-IA12

L5235 - X - 00000000

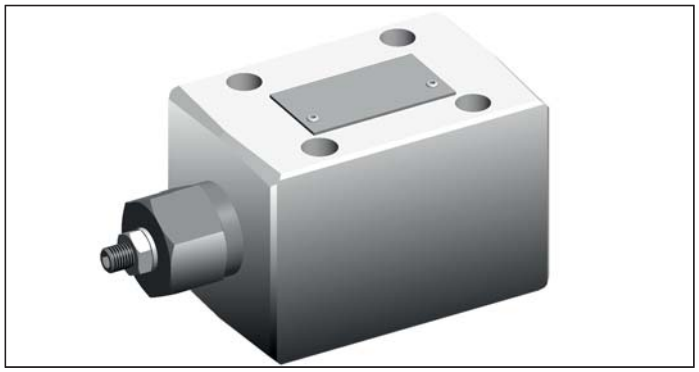

Description

It is a directional valve which generates continuous reciprocating motion of a double acting actuator, with no need of external controls. When flow starts into P, the control spool opens wider P to A (and B to Tank); the delta p between P and A is employed to keep the spool in this wider open position. As load becomes excessive, or at end-stroke, the system relief valve opens, the oil is diverted to tank, flow P to A stops and the delta p vanishes; now the combined action of the centering springs and of the static pressure in hose A push back the spool, and make it shift to the other position. This opens P to B (and A to Tank) and the motion is reversed; the flow builds-up a delta p between P and B which holds the spool in the new position. When the system relief valve opens again the flow stops, the delta p vanishes, and the spool shifts to its "normal" P to A position: a new cycle starts.

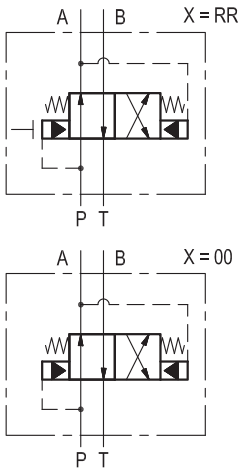

Technical data

Max. operating pressure	250 bar (3600 psi)
Flow range	10 - 100 l/min. (3 - 26 gpm)
Good and stable shifting from P -> A into P -> B requires that some oil returns back from port A as flow stops and A opens toward Tank: as a practical rule, please ensure that line A includes a portion of flexible hose at least 500 mm long to provide some "accumulator effect". For adjustment of the pressure setting of the system relief valve, the reciprocating function must be temporarily disabled: in order to lock the spool and prevent shifting, screw down the locking screw (if available) under the dome nut. This screw must be turned back up to the initial position, once the adjustment is finished. **Note:** this valve is available with features different from what here described; contact our Service Network for the relevant information: - Initial oil flow direction: P -> B (instead of P -> A).	
Weight	2.8 kg (6.2 lbs)
Manifold material	Cast iron (ISO 16112/JV/400)
Fluid	Mineral oil (HL, HLP) according DIN 51524
Fluid temperature range	-20 °C to 80 (-4 to 176 °F)
Viscosity range	5 to 420 mm^2/s (cSt)
Permissible degree of fluid contamination	ISO 4572: $\beta_x \geq 75$ X=12...15 ISO 4406: class 20/18/15 NAS 1638: class 9

Note: for applications outside these parameters, please consult us.

Characteristic curve

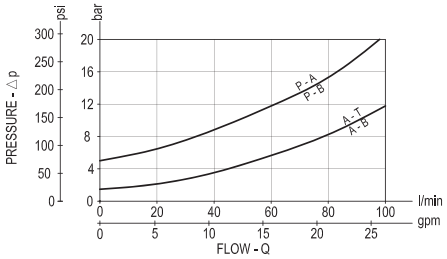

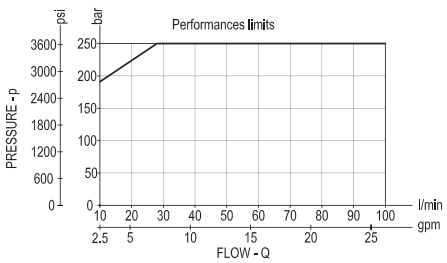

Ordering code

L52	35	X	00000000

Automatic directional

Port sizes	A	B	P	T
	CETOP 5 (F10)	CETOP 5 (F10)	CETOP 5 (F10)	CETOP 5 (F10)

00	Without end stroke
RR	With end stroke

Preferred types

Type	Material number
L52350000000000	R933007897
L5235RR00000000	R933007898

Type	Material number

Dimensions

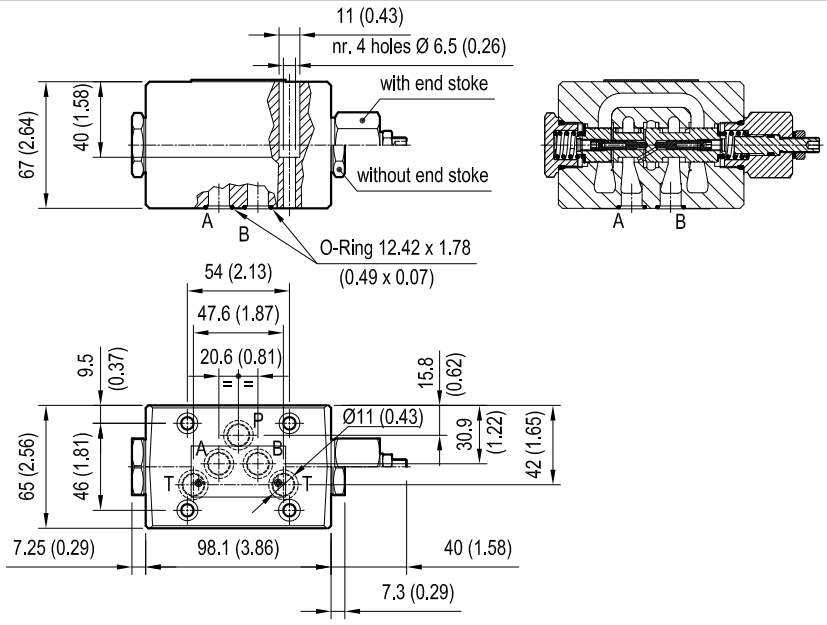

Modular directional valves

Inlet elements

Designation	Description	Ports/Size	Code	Data sheet	Page
Inlet elements basic	TE00	G 3/8, G 1/2, SAE8 / Size 6	TE-00_	18300-01	445
Inlet elements with primary pressure relief valve	TE01	G 3/8, G 1/2, SAE8 / Size 6	TE-01_	18300-02	449
Inlet elements with LS connections	TE03	G 3/8, G 1/2, SAE8 / Size 6	TE-03_	18300-03	453
Inlet elements with primary pressure relief valve and with LS connections	TE04	G 3/8, G 1/2, SAE8 / Size 6	TE-04_	18300-04	457
Inlet elements with primary pressure relief valve and with Solenoid Unloading Cartridge	TE05	G 3/8, G 1/2, SAE8 / Size 6	TE-05_	18300-05	461
Inlet elements with limitation of primary pressure in the system and LS controlled unloading of the excess flow	TE06	G 3/8, G 1/2 / SAE 6	TE-06_	18300-06	465
Inlet elements with limitation of primary pressure, LS compensated flow control and solenoid operated unloading	TE07	G 1/2 / Size 6	TE-07_	18300-07	469
Inlet elements with primary pressure relief valve and proportional LS controlled 3-way flow regulator	TE10	G 3/8, G 1/2, SAE8 / Size 6	TE-10_	18300-09	473
Inlet elements with pressure reducing valve on the P line	TE11	G 3/8, G 1/2, SAE8 / Size 6	TE-11_	18300-10	477
Inlet element with by-pass compensator, LS relief for open center control block and solenoid operated unloading	TE-13	G 1/2, G 3/4, SAE 10 / Size 8	TE-13_	18300-13	481
Inlet elements with LS connections and double pressure relief valve (P and LS line)	TE-16	G 1/2, G 3/4, SAE 10 / Size 8	TE-16_	18300-14	485

Inlet Elements basic

TE-00-__-

Description

The inlet elements have threaded ports and connect the external P and T lines to the P and T channels of the ED Directional Valve Elements.
They include a Test Point port (M) for pressure gauge connection.
Port sizes can be G 3/8, G 1/2 or SAE 8 (3/4 16 UNF).
Material: the body can be made of Black Anodized Aluminium (AL), or of Yellow Zinc plated (Cr+3) Cast Iron (CI).

Technical data

General			
Inlet Element Type		AL Version	CI Version
TE-00-02-00	kg (lbs)	0.33 (0.72)	0.82 (1.81)
TE-00-03-00	kg (lbs)	0.53 (1.16)	1.35 (2.88)
TE-00-56-00	kg (lbs)	0.53 (1.16)	1.35 (2.88)
Ambient Temperature	°C (°F)	–20....+50 (-4....+122) (NBR seals)	
Hydraulic			
Maximum pressure for aluminium version (AL)	bar (psi)	250 (3625)	
Maximum pressure for Cast Iron version (CI)	bar (psi)	310 (4500)	
Maximum inlet flow	l/min (gpm)	50 (13.2)	
Hydraulic fluid General properties: it must have physical lubricating and chemical properties suitable for use in hydraulic systems such as, for example:		Mineral oil based hydraulic fluids HL (DIN 51524 part 1). Mineral oil based hydraulic fluids HLP (DIN 51524 part 2). For use of environmentally acceptable fluids (vegetable or polyglycol base) please consult us.	
Fluid Temperature	°C (°F)	–20....+80 (-4....+176) (NBR)	
Permissible degree of fluid contamination		ISO 4572: $\beta_x \geq 75$ X=12...15 ISO 4406: class 20/18/15 NAS 1638: class 9	
Viscosity range	mm^2/s	5....420	

Note

For applications with different specifications consult us

Ordering details

01		02		03		04		
TE	**-**	**00**	**-**		**-**	**00**	**-**	

Family

01	Inlet Elements	**TE**

Configuration

02	Basic	**00**

Ports

03	G 3/8 DIN 3852	**02**
	G 1/2 DIN 3852	**03**
	3/4-16 UNF-2B (SAE8)	**56**

Material

04	Cast Iron	**CI**
	Aluminium	**AL**

Symbol

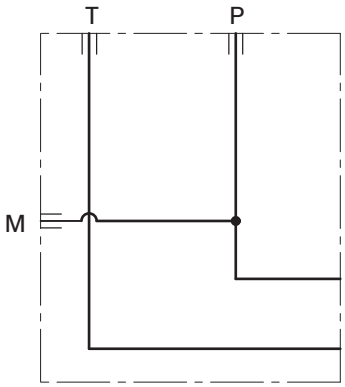

External dimensions and fittings

TE - 00 - 02 - . .

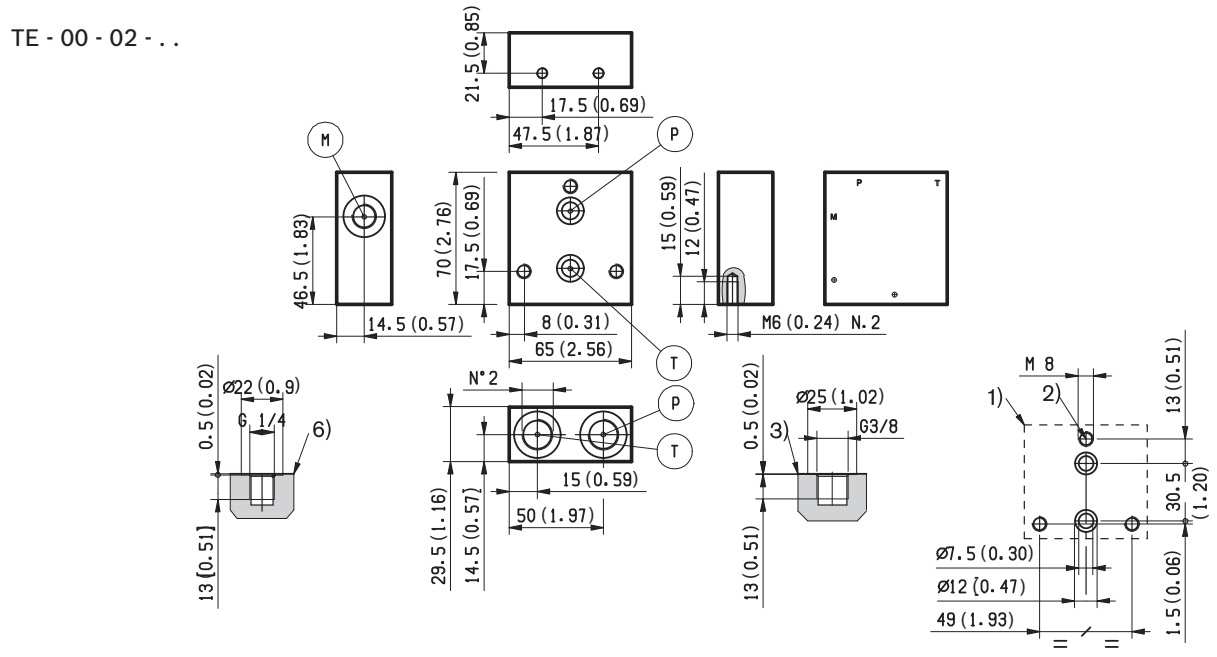

TE - 00 - 03 - . .
TE - 00 - 56 - . .

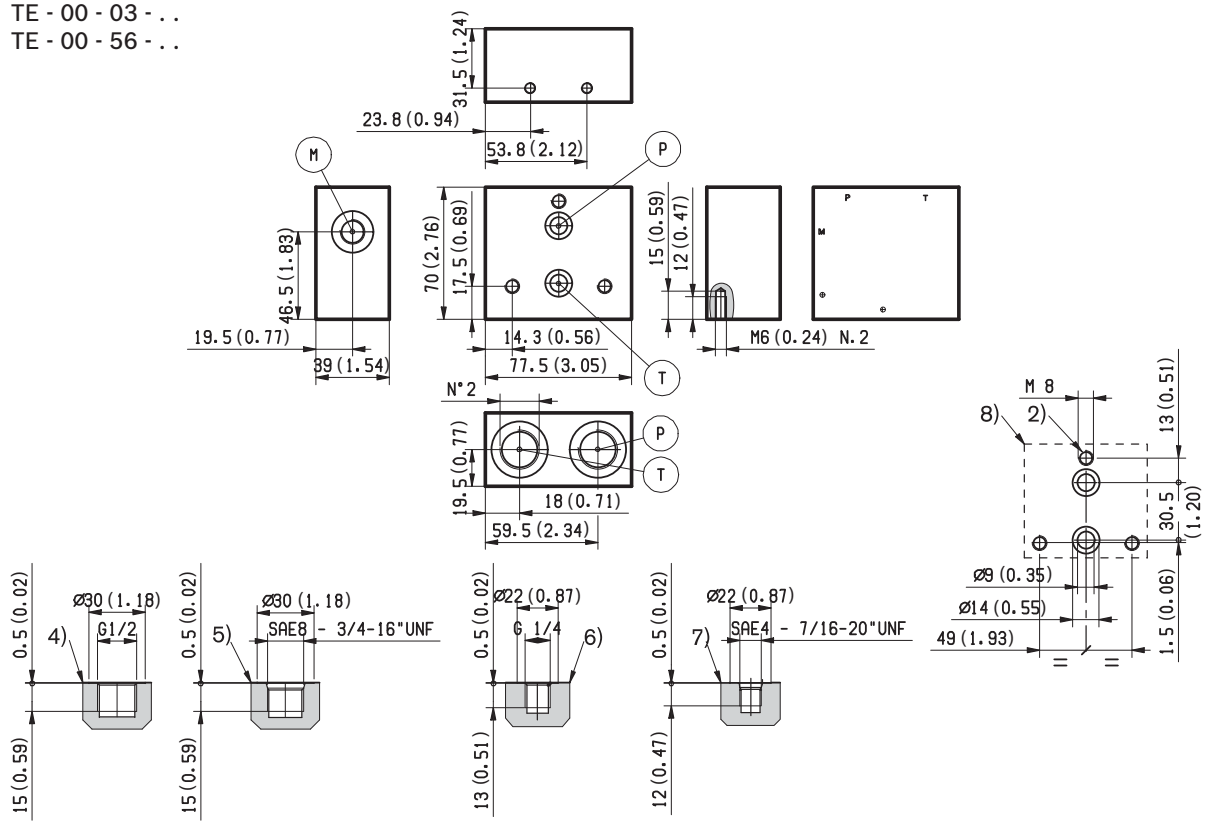

1 Flange details for interfacing with the ED Directional Valve Elements (Version TE-00-02...).
2 For tie rod and tightening torque information see data sheet RE 18301-90.
3 Hydraulic Ports P-T, for Inlet Elements TE-00-02..
4 Hydraulic Ports P-T, for Inlet Modules TE-00-03..
5 Hydraulic Ports P-T, for Inlet Elements TE-00-56..
6 Test Point port (M), for Inlet Elements TE-00-02.. and TE-00-03..
7 Test Point port (M), for Inlet Elements TE-00-56..
8 Flange details for interfacing with the ED Directional Valve Elements (Version TE-00-03... and TE-00-56...).

Dimensions [mm (inches)]

Inlet Elements
with Primary Pressure Relief Valve

TE-01-__-

Description

The inlet elements TE-01-__ are employed to connect the external P and T lines to the P and T channels inside the ED elements of the Directional Valve Assembly. They incorporate a pressure relief cartridge which limits the maximum primary pressure in the P line and unloads to Tank any excess flow. The relief setting can be checked through the Test Point port M.

The TE-01-__ inlet elements are available in two versions:

-Body made of Black Anodized Aluminium (Al), or

-Body made of Yellow Zinc plated (Cr+3) Cast Iron (CI).

Port sizes can be G 3/8, G 1/2 or SAE 8 (3/4" 16 UNF).

Technical data

General			
Inlet Element Type		AL Version	CI Version
TE-01-02-00-	kg (lbs)	0.31 (0.67)	Not Available
TE-01-03-00-	kg (lbs)	0.49 (1.08)	1.23 (2.72)
TE-01-56-00-	kg (lbs)	0.49 (1.08)	Not Available
TE-01-02-S_-	kg (lbs)	0.44 (0.96)	Not Available
TE-01-03-S_-	kg (lbs)	0.66 (1.45)	1.36 (3.00)
TE-01-56-S_-	kg (lbs)	0.66 (1.45)	Not Available
Ambient Temperature	°C (°F)	–20....+50 (-4....+122) (NBR seals)	
Hydraulic			
Maximum pressure for aluminium version (AL)	bar (psi)	250 (3625)	
Maximum pressure for Cast Iron version (CI)	bar (psi)	310 (4500)	
Maximum inlet flow	l/min (gpm)	50 (13.2)	
Hydraulic fluid General properties: it must have physical lubricating and chemical properties suitable for use in hydraulic systems such as, for example:		Mineral oil based hydraulic fluids HL (DIN 51524 part 1). Mineral oil based hydraulic fluids HLP (DIN 51524 part 2). For use of environmentally acceptable fluids (vegetable or polyglycol base) please consult us.	
Fluid Temperature	°C (°F)	–20....+80 (-4....+176) (NBR)	
Permissible degree of fluid contamination		ISO 4572: $\beta_x \geq 75$ X=10...12 ISO 4406: class 19/17/14 NAS 1638: class 8	
Viscosity range	mm^2/s	5....420	

Note

For applications with different specifications consult us

Ordering details

01		02		03		04		05
TE	-	**01**	-		-		-	

Family

01	Inlet Elements	**TE**

Configuration

02	With Primary Pressure Relief Valve	**01**

Ports

03	G 3/8 DIN 3852	**02**
	G 1/2 DIN 3852	**03**
	3/4-16 UNF-2B (SAE8)	**56**

Primary Pressure Relief range

04	Cavity without primary pressure relief valve (to be ordered separately)	**00**
	Pressure range 25-120bar (362-1740 psi)	**SN**
	Pressure range 40-200bar (580-2900 psi)	**SB**
	Pressure range 200-350bar (2900-5076 psi)	**SV**

Material

05	Cast Iron [1)]	**CI**
	Aluminium	**AL**

1) Only available for versions with G 1/2 ports (TE-01-03-...)

Symbol

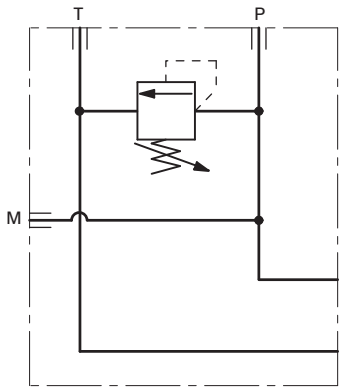

External dimensions and fittings

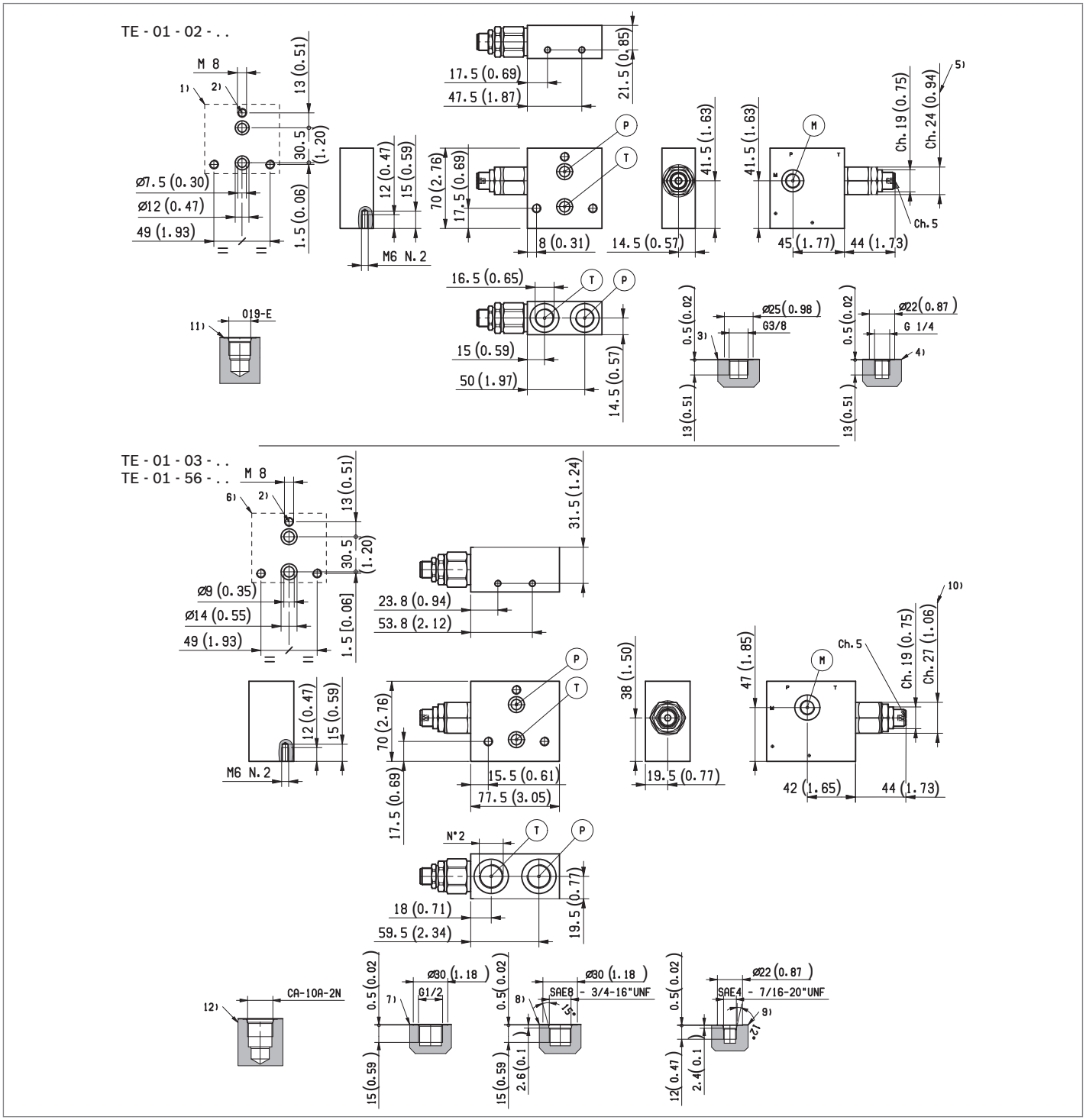

1 Flange specifications for coupling to the ED Directional Valve Elements (for Version TE-01-02...).
2 For tie rod and tightening torque information see data sheet RE 18301-90.
3 Hydraulic Ports P-T G 3/8, for Inlet Elements TE-01-02...
4 Test Point port (M) G 1/4, for Inlet Elements TE-01-02... and TE-01-03...
5 Primary Pressure Relief Cartridge VMD1025, with screw type adjuster (refer to RE 18301-91).
6 Flange specifications for fitting of the ED Directional Valve Elements. (Versions TE-01-03... and TE-01-56...).
7 Hydraulic Ports P-T G 1/2, for versions TE-01-03-...
8 Hydraulic Ports P-T SAE 8, for versions TE-01-56...
9 Test Point port SAE 4, for versions TE-01-56-...
10 Primary Pressure Relief Cartridge VMD1040, with screw type adjuster (refer to RE 18301-91).
11 Cavity for Primary Pressure Relief VMD1025.
12 Cavity for Primary Pressure Relief VMD1040.

Dimensions [mm (inches)]

Inlet Elements with LS connections

TE-03-__-

Description

The inlet elements TE-03-__ are employed to connect the external P, T lines to the P, T channels inside the ED elements of the Directional Valve Assembly and to connect to the LS ports of the elements equipped with LS channels.
The TE-03-__ inlet elements are available in two versions:
- Body made of Black Anodized Aluminium (Al), or
- Body made of Yellow Zinc plated (Cr+3) Cast Iron (CI).

Port sizes can be G 3/8, G 1/2 or SAE 8 (3/4" 16 UNF)
LS ports are G 1/4 for BSPP versions, and SAE 4 (7/16" 20UNF 2B) for "UNF" versions.

Technical data

General			
Inlet Element Type		AL Version	CI Version
TE-03-02-00	kg (lbs)	0.36 (0.80)	0.98 (2.16)
TE-03-03-00	kg (lbs)	0.40 (0.90)	1.01 (2.23)
TE-03-56-00	kg (lbs)	0.40 (0.90)	Not available
Ambient Temperature	°C (°F)	–20....+50 (-4....+122) (NBR seals)	
Hydraulic			
Maximum pressure for aluminium version (AL)	bar (psi)	250 (3625)	
Maximum pressure for Cast Iron version (CI)	bar (psi)	310 (4500)	
Maximum inlet flow	l/min (gpm)	50 (13.2)	
Hydraulic fluid General properties: it must have physical lubricating and chemical properties suitable for use in hydraulic systems such as, for example:		Mineral oil based hydraulic fluids HL (DIN 51524 part 1). Mineral oil based hydraulic fluids HLP (DIN 51524 part 2). For use of environmentally acceptable fluids (vegetable or polyglycol base) please consult us.	
Fluid Temperature	°C (°F)	–20....+80 (-4....+176) (NBR)	
Permissible degree of fluid contamination		ISO 4572: $\beta_x \geq 75$ X=12...15 ISO 4406: class 20/18/15 NAS 1638: class 9	
Viscosity range	mm^2/s	5....420	

Note
For applications with different specifications consult us

RF 16300/03/02 2016 Bosch Rexroth AG
453

Ordering details

01		02		03		04		05
TE	**-**	**03**	**-**		**-**		**-**	

Family

01	Inlet Elements	**TE**

Configuration

02	With Load Sensing ports	**03**

Ports

03	G 3/8 DIN 3852	**02**
	G 1/2 DIN 3852	**03**
	3/4-16 UNF-2B (SAE8)	**56**

Size of drain orifice for LS

04	No drain	**00**
	0.3 mm (0.012 inch) orifice	**01**
	0.4 mm (0.016 inch) orifice	**02**
	0.5 mm (0.020 inch) orifice	**03**

Material

05	Cast Iron [1)]	**CI**
	Aluminium	**AL**

1) Only available for versions with G 3/8 and G 1/2 ports (TE-03-02-../TE-03-03-..)

Symbol

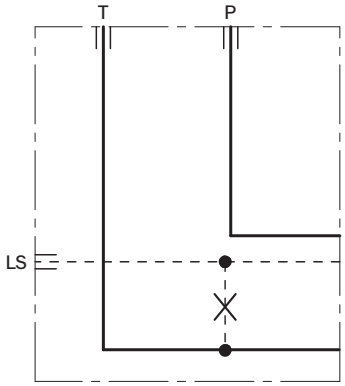

External dimensions and fittings

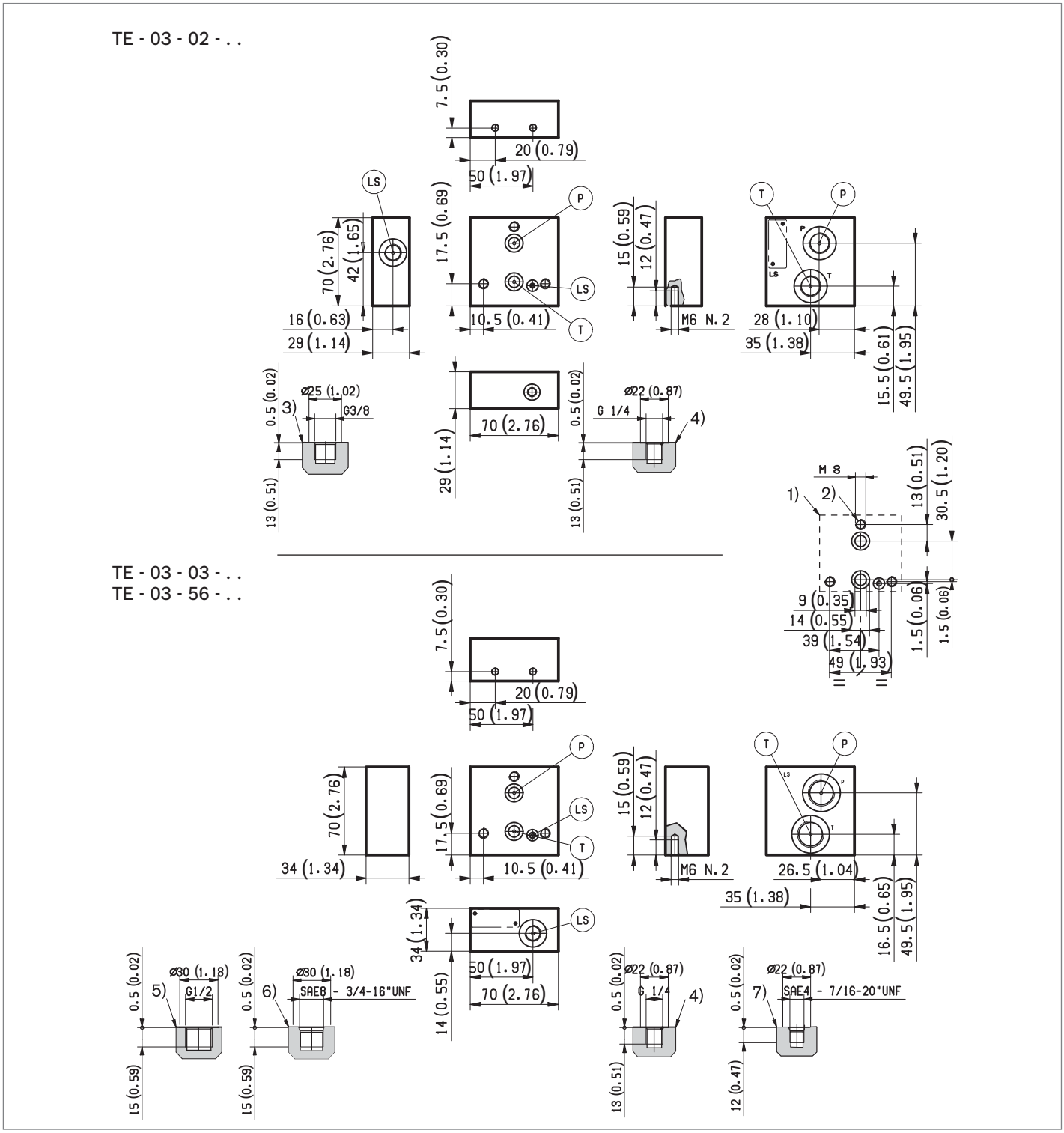

1 Flange specifications for coupling to the ED Directional Valve Elements.
2 For tie rod and tightening torque information see data sheet RE 18301-90.
3 Hydraulic Ports P-T G 3/8, for Inlet Elements TE-03-02...
4 Load Sensing port (LS) G 1/4, for Inlet Elements TE-03-02... and TE-03-03...
5 Hydraulic Ports P-T G 1/2, for versions TE-03-03-...
6 Hydraulic Ports P-T SAE 8, for versions TE-03-56...
7 Load Sensing port (LS) SAE 4, for Inlet Elements TE-03-56...

Dimensions [mm (inches)]

Inlet Elements
with Primary Pressure Relief Valve and with LS connections

TE-04-__-

Description

The inlet elements TE-04-__ are employed to connect the external P, T lines to the P, T channels inside the ED elements of the Directional Valve Assembly and to connect to the LS ports of the elements equipped with LS channels. They incorporate a pressure relief cartridge which limits the maximum primary pressure in the P line and unloads to Tank any excess flow.

The TE-04-__ inlet elements are available with body made of Black Anodized Aluminium (AL).

Hydraulic Ports P and T can be size G 3/8, G 1/2 or SAE 8 (3/4" 16 UNF). LS port is G 1/4 on BSPP versions, and SAE 4 in SAE versions.

Technical data

General		
TE-04-00	kg (lbs)	0.58 (1.27)
TE-04-01	kg (lbs)	0.70 (1.54)
Ambient Temperature	°C (°F)	–20....+50 (-4....+122) (NBR seals)
Hydraulic		
Maximum pressure	bar (psi)	250 (3625)
Maximum inlet flow	l/min (gpm)	50 (13.2)
Hydraulic fluid General properties: it must have physical lubricating and chemical properties suitable for use in hydraulic systems such as, for example:		Mineral oil based hydraulic fluids HL (DIN 51524 part 1). Mineral oil based hydraulic fluids HLP (DIN 51524 part 2). For use of environmentally acceptable fluids (vegetable or polyglycol base) please consult us.
Fluid Temperature	°C (°F)	–20....+80 (-4....+176) (NBR)
Permissible degree of fluid contamination		ISO 4572: $\beta_x \geq 75$ X=10...12 ISO 4406: class 19/17/14 NAS 1638: class 8
Viscosity range	mm^2/s	5....420

Note

For applications with different specifications consult us

Ordering details

01		02		03		04		05		06
TE	**-**	**04**	**-**		**-**		**-**		**-**	**AL**

Family

01	Inlet Elements	**TE**

Configuration

02	With primary pressure relief valve and with LS connections	**04**

Ports

03	G 3/8 DIN 3852	**02**
	G 1/2 DIN 3852	**03**
	3/4-16 UNF-2B (SAE8)	**56**

Primary Pressure Relief range

04	Cavity without primary pressure relief valve (to be ordered separately)	**00**
	25-125bar (362-1813 psi)	**SN**
	40-200bar (580-2900 psi)	**SB**
	200-350bar (2900-5076 psi)	**SV**

Size of drain orifice for LS

05	Without drain orifice	**00**
	Orefice 0.3 mm (0.012 in)	**01**
	Orefice 0.4 mm (0.016 in)	**02**
	Orefice 0.5 mm (0.020 in)	**03**

Material

06	Aluminium	**AL**

Symbol

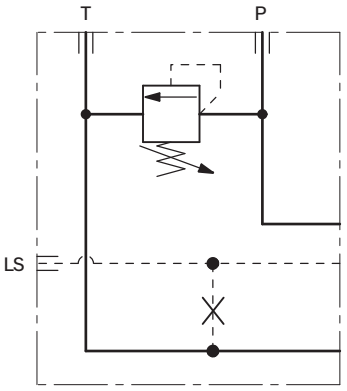

External dimensions and fittings

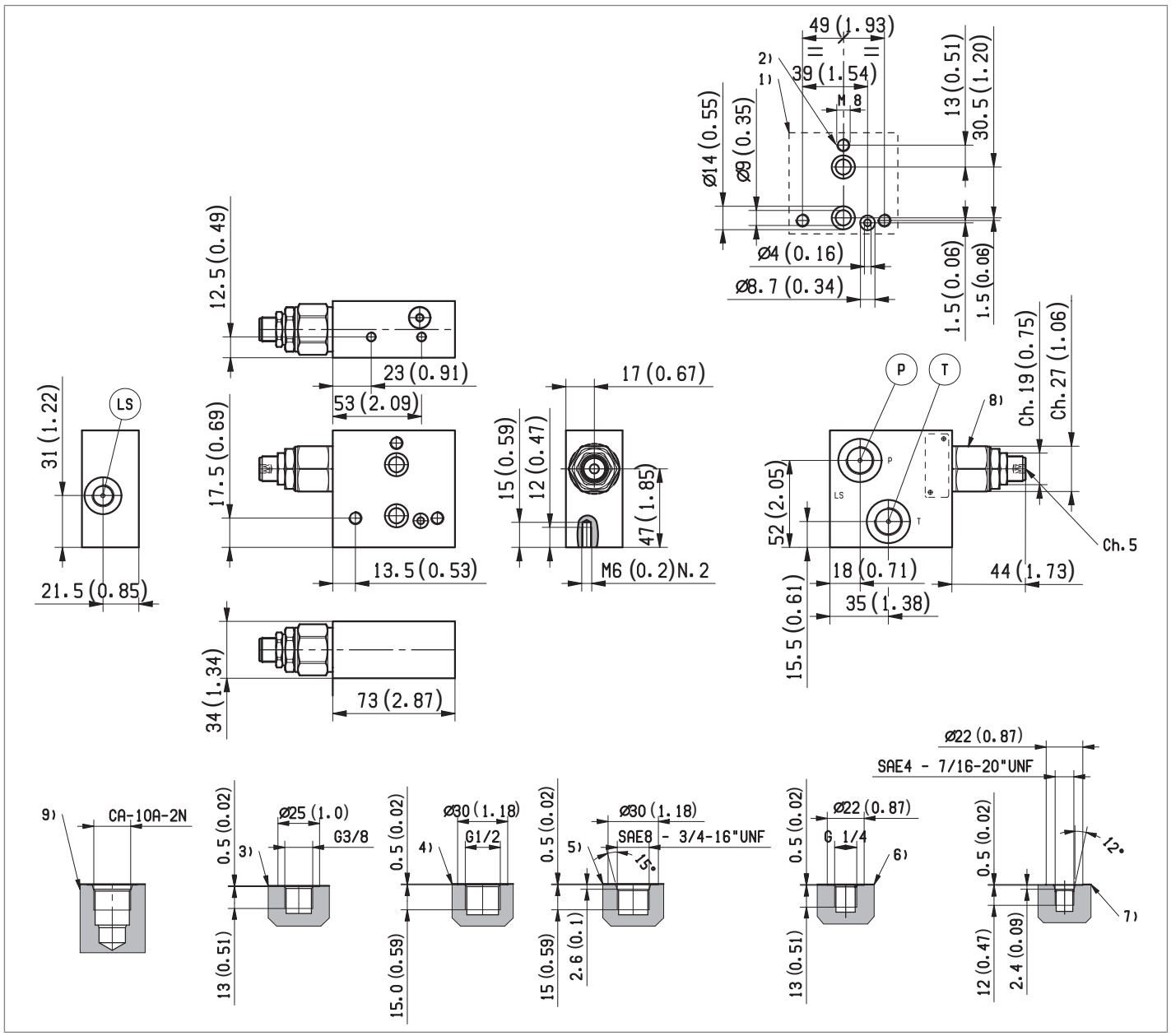

1 Flange specifications for coupling to the ED Directional Valve Elements.
2 For tie rod and tightening torque information see data sheet RE 18301-90.
3 Hydraulic Ports P-T G 3/8, for Inlet Elements TE-04-02...
4 Hydraulic Ports P-T G 1/2, for versions TE-04-03-...
5 Hydraulic Ports P-T SAE 8, for versions TE-04-56.
6 Test Point port G 1/4, for Inlet Elements TE-04-02... and TE-04-03...
7 Test Point port SAE 4, for versions TE-04-56-...
8 Primary Pressure Relief Cartridge VMD1040, with screw type adjuster (refer to RE 18301-91).
9 Cavity for Primary Pressure Relief Cartridge VMD1040.

Dimensions [mm (inches)]

Inlet Elements with Primary Pressure Relief Valve and with Solenoid Unloading Cartridge

TE-05-__-

Description

The inlet elements TE-05-__ are employed to connect the external P and T lines to the P and T channels inside the ED elements of the Directional Valve Assembly. They incorporate a pressure relief cartridge which limits the primary pressure in the P line. The relief setting can be checked through the Test Point port M. When fitted, the Normally Open Solenoid Unloading VEI Cartridge unloads to Tank all the P line flow; unloading stops when the cartridge coil is energized.

The TE-05-__ inlet elements are available in two versions:
- Body made of Black Anodized Aluminium (Al), or
- Body made of Yellow Zinc plated (Cr+3) Cast Iron (CI).

Port sizes can be G 3/8, G 1/2 or SAE 8 (3/4” 16 UNF).

Technical data

General			
Inlet Element Type		AL Version	CI Version
TE-05-02-00-	kg (lbs)	0.50 (1.10)	1.26 (2.78)
TE-05-03-00-	kg (lbs)	0.74 (1.68)	1.92 (4.20)
TE-05-56-00-	kg (lbs)	0.74 (1.68)	Not available
TE-05-02-S_-	kg (lbs)	0.60 (1.39)	1.40 (3.10)
TE-05-03-S_-	kg (lbs)	0.94 (2.06)	2.10 (4.60)
TE-05-56-S_-	kg (lbs)	0.94 (2.06)	Not available
Ambient Temperature	°C (°F)	–20....+50 (-4....+122) (NBR seals)	
Hydraulic			
Maximum pressure for aluminium version (AL)	bar (psi)	250 (3625)	
Maximum pressure for Cast Iron version (CI)	bar (psi)	310 (4500)	
Maximum inlet flow	l/min (gpm)	50 (13.2)	
Hydraulic fluid General properties: it must have physical lubricating and chemical properties suitable for use in hydraulic systems such as, for example:		Mineral oil based hydraulic fluids HL (DIN 51524 part 1). Mineral oil based hydraulic fluids HLP (DIN 51524 part 2). For use of environmentally acceptable fluids (vegetable or polyglycol base) please consult us.	
Fluid Temperature	°C (°F)	–20....+80 (-4....+176) (NBR)	
Permissible degree of fluid contamination		ISO 4572: $\beta_x \geq 75$ X=10...12 ISO 4406: class 19/17/14 NAS 1638: class 8	
Viscosity range	mm^2/s	5....420	

Note

For applications with different specifications consult us

Ordering details

01	02	03	04	05	06	07	08
TE	- 05	-	-	-	-	-	-

Family

01	Inlet Elements	**TE**

Configuration

02	With primary pressure relief valve and with solenoid unloading cartridge	**05**

Ports

03	G 3/8 DIN 3852	**02**
	G 1/2 DIN 3852	**03**
	3/4-16 UNF-2B (SAE8)	**56**

Primary Pressure Relief range

04	Without primary pressure relief valve	**00**
	Pressure range 25-120bar (362-1740 psi)	**SN**
	Pressure range 40-200bar (580-2900 psi)	**SB**
	Pressure range 200-350bar (2900-5076 psi)	**SV**

Material

05	Cast Iron [1]	**CI**
	Aluminium	**AL**

Cartridge voltage supply

06	No cartridge	**No code**
	Cartridge without coil	**00**
	12V DC	**OB**
	24V DC	**OC**
	26V DC	**AC**

Electric connections

07	No cartridge	**No code**
	Without coils	**00**
	With coils, without mating connector DIN EN 175301-803 [2]	**01**
	With coils, with bi-directional diode, without mating connector vertical Amp-Junior	**03**
	With coils, with bi-directional diode, without mating connector DT04-2P	**07**

Options

08	No cartridge	**No code**
	Standard	**00**
	Push-button type manual override	**OP**
	Push and twist type manual override	**SG**

Symbol

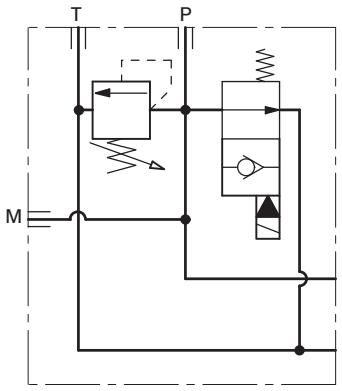

1) Only available for versions with G 1/2 ports (TE-01-03-...)
2) For connectors ordering code see data sheet RE 18325-90.

External dimensions and fittings

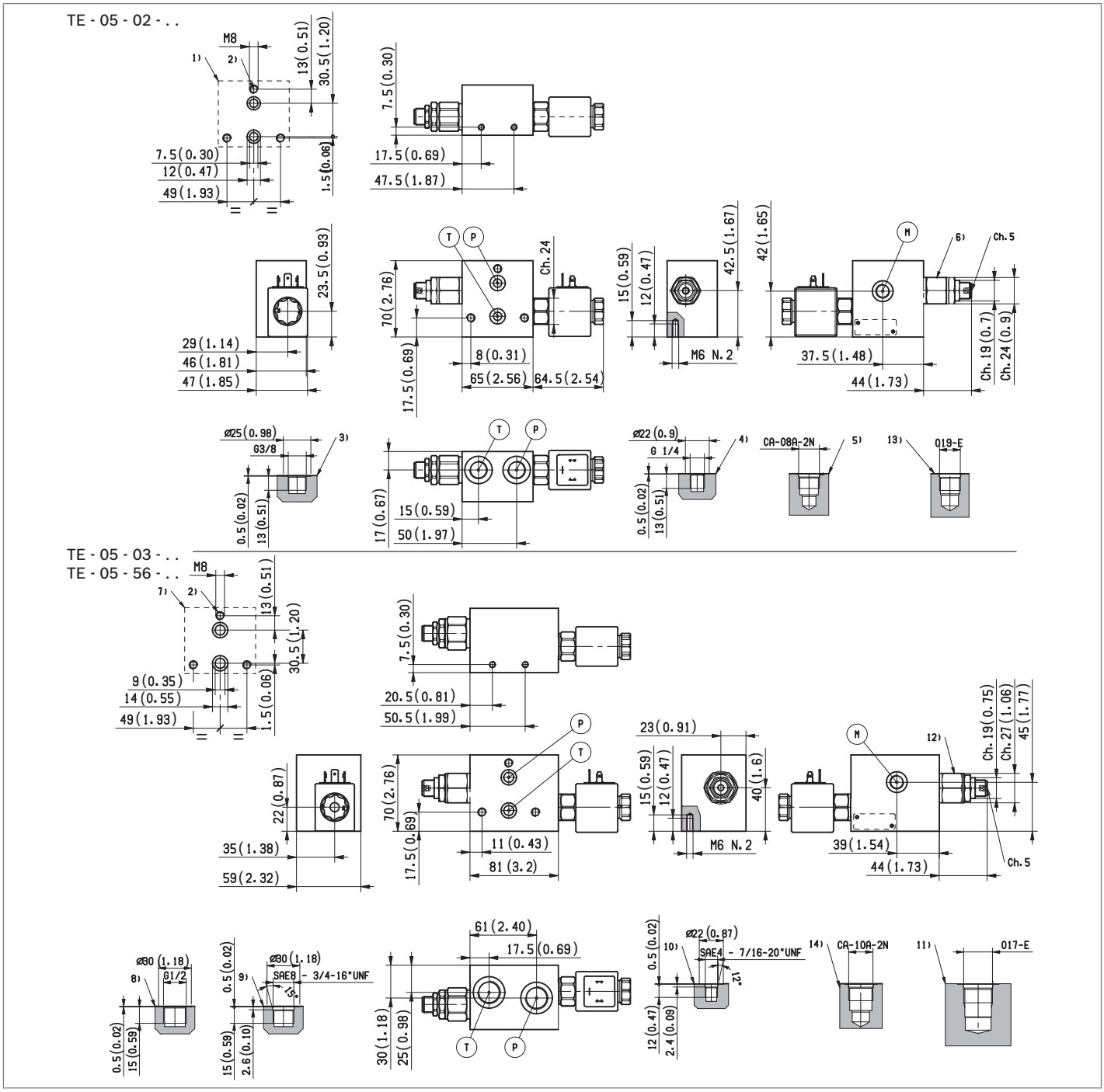

1 Flange specifications for coupling to the ED Directional Valve Elements:
2 For tie rod and tightening torque information see data sheet RE 18301-90.
3 Hydraulic Ports P-T G 3/8, for Inlet Elements TE-05-02...
4 Test Point port M G 1/4, for Inlet Elements TE-05-02... and TE-05-03...
5 Cavity for Solenoid Unloading Cartridge, VEI type, for versions TE-05-02-...
6 Primary Pressure Relief Cartridge VMD1025, with screw type adjuster (refer to RE 18301-91) for TE-05-02... inlet elements.
7 Flange specifications for coupling to the ED Directional Valve Elements (versions TE-05-03-.., TE-05-56-...).
8 Hydraulic Ports P-T G 1/2, for versions TE-05-03-...
9 Hydraulic Ports P-T SAE 8, for versions TE-05-56...
10 Test Point port SAE 4, for versions TE-05-56-...
11 Cavity for Solenoid Unloading Cartridge, VEI type, for versions TE-05-03-... and TE-05-56...
12 Primary Pressure Relief Cartridge VMD1040, with screw type adjuster for versions TE-05-03-... and TE-05-56... (refer to RE 18301-91).
13 Cavity for Primary Pressure Relief Cartridge VMD1025.
14 Cavity for Primary Pressure Relief Cartridge VMD1040.

Dimensions [mm (inches)]

Inlet Elements
with limitation of primary pressure in the system and LS controlled unloading of the excess flow

TE-06-__-

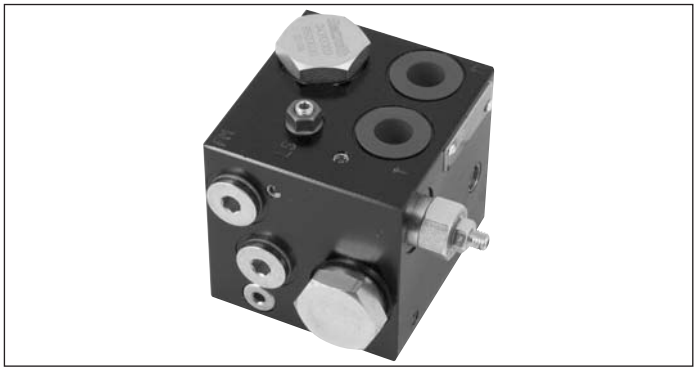

Description

The inlet elements TE-06-__ are employed to connect the external P, T lines to the P, T channels inside the ED elements of the Directional Valve Assembly and to connect to the LS ports of the elements equipped with LS channels. An LS controlled 3-way compensator provides pressure compensated flow to the ED elements of the Directional Valve Assembly. The same 3-way compensator is also controlled by a pilot relief cartridge and unloads to tank any excess flow in order to limit the primary pressure in the system. In the inlet elements version TE-06-__-01, the 3 way compensator can be mechanically blocked and the relief cartridge only controls the LS line pressure. The TE-06-__ inlet elements are available with body made of Black Anodized Aluminium (Al). Port sizes can be G 3/8, G 1/2, with test point PM and LS port G 1/4.

Technical data

General		
TE-06-02-_ _-	kg (lbs)	1.15 (2.53)
TE-06-03-_ _-	kg (lbs)	1.42 (3.13)
Ambient Temperature	°C (°F)	–20....+50 (-4....+122) (NBR seals)
Hydraulic		
Maximum pressure	bar (psi)	250 (3625)
Maximum inlet flow for TE-06-02-_ _ version	l/min (gpm)	40 (10.6)
Maximum inlet flow for TE-06-03-_ _ version	l/min (gpm)	90 (23.8)
Max. rated flow at P1	l/min (gpm)	40 (10.57)*
Max. flow through LS drain	l/min (gpm)	0.7 (0.185)
Hydraulic fluid General properties: it must have physical lubricating and chemical properties suitable for use in hydraulic systems such as, for example:		Mineral oil based hydraulic fluids HL (DIN 51524 part 1). Mineral oil based hydraulic fluids HLP (DIN 51524 part 2). For use of environmentally acceptable fluids (vegetable or polyglycol base) please consult us.
Fluid Temperature	°C (°F)	–20....+80 (-4....+176) (NBR)
Permissible degree of fluid contamination		ISO 4572: $\beta_x \geq 75$ X=10...12 ISO 4406: class 19/17/14 NAS 1638: class 8
Viscosity range	mm^2/s	5....420

1) The max. rated flow depends from the directional control element.

Note

For applications with different specifications consult us

Ordering details

01		02		03		04		05		06
TE	**-**	**06**	**-**		**-**		**-**	**AL**	**-**	

Family

01	Inlet Elements	**TE**

Configuration

02	With limitation of primary pressure in the system and LS controlled unloading of the excess flow	**06**

Ports

03	G 3/8 DIN 3852	**02**
	G 1/2 DIN 3852	**03**

Pressure Relief range

04	50-210bar (725-3046 psi)	**01**
	100-250bar (1450-3626 psi)	**02**

Material

05	Aluminium	**AL**

3-way compensator type

05	Without mechanical blocking	**00**
	With mechanical blocking [1]	**01**

1) Necessary for open/closed center configuration.

Symbol

TE-06-__-__-AL-00 (Open center)

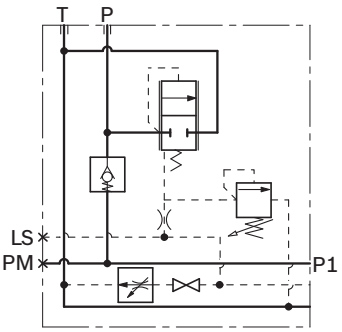

TE-06-__-__-AL-01 (Open/Closed center)

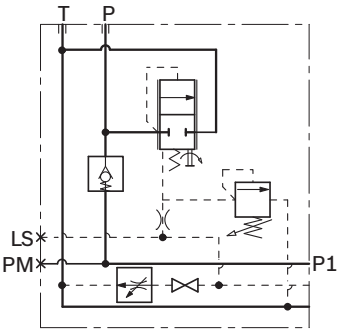

Characteristic curves

Pressure drop through compensator

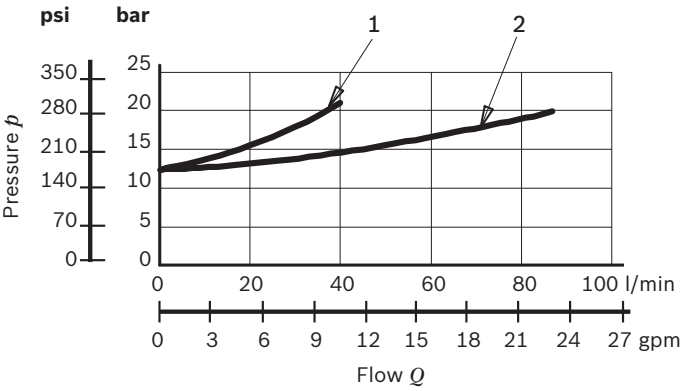

Model	Curve no.
TE-06-02-_ _	1
TE-06-03-_ _	2

External dimensions and fittings

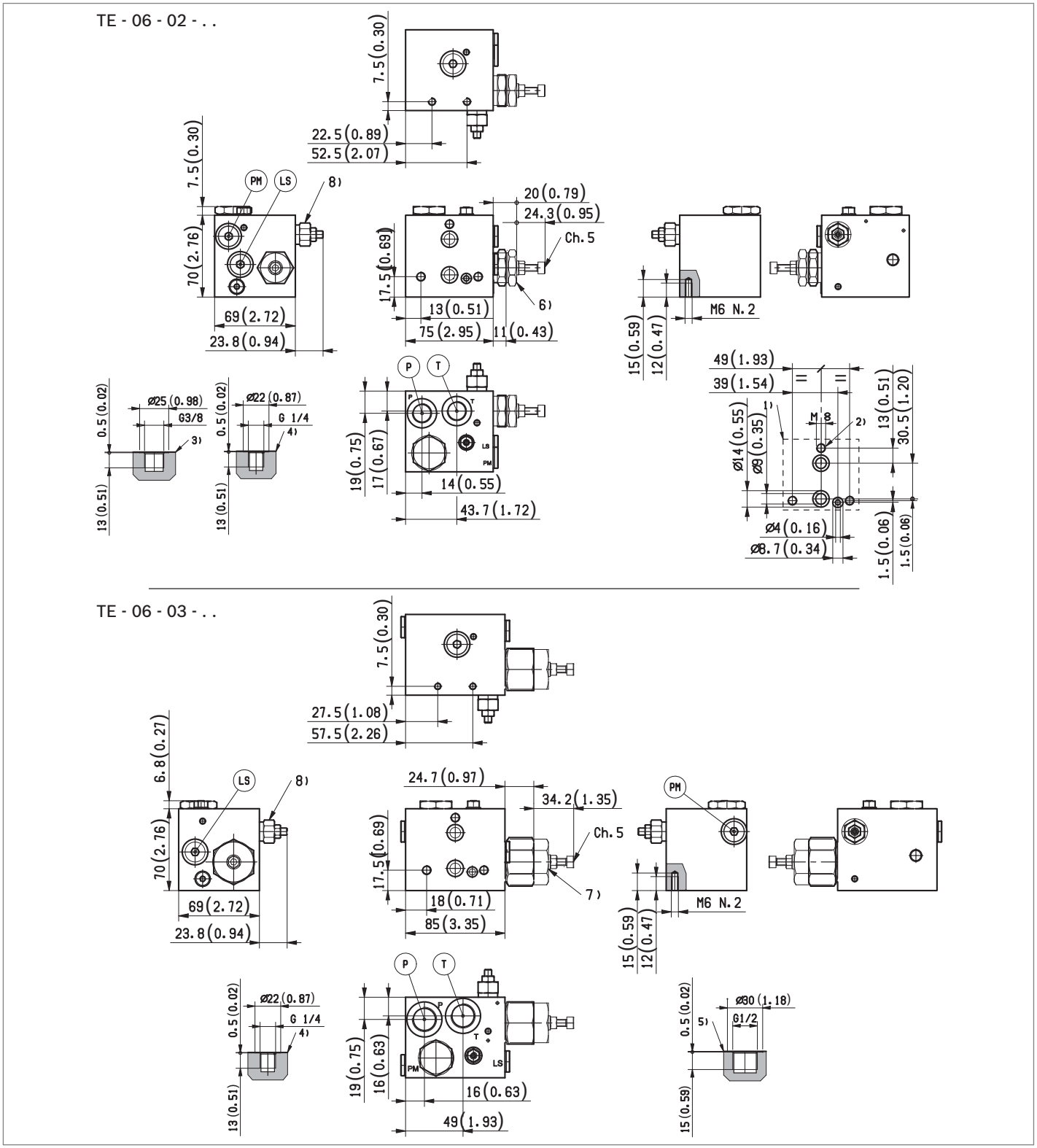

1 Flange specifications for coupling to the ED Directional Valve Elements.
2 For tie rod and tightening torque information see data sheet RE 18301-90.
3 Hydraulic Ports P-T G 3/8, for Inlet Elements TE-06-02...
4 Test Point ports PM and LS port G 1/4.
5 Hydraulic Ports P and T G 1/2, for Inlet Elements TE-06-03...
6 Overall dimensions, including compensator, for TE-06-02-__-01
7 Overall dimensions, including compensator, for TE-06-03-__-01
8 Pressure relief cartridge VS-5-C.

Dimensions [mm (inches)]

Inlet Elements
with limitation of primary pressure, LS compensated flow control and solenoid operated unloading

TE-07-__-

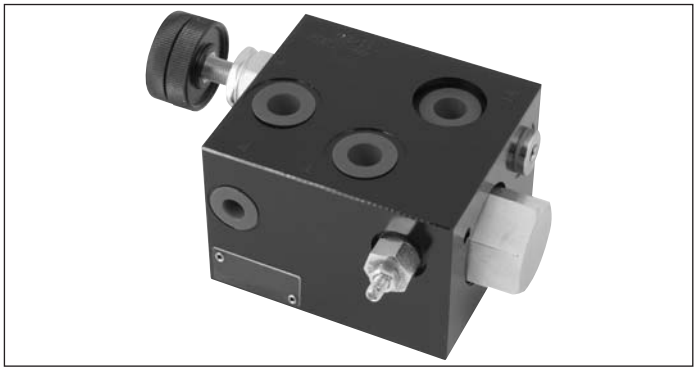

Description

The inlet elements TE-07-__ are employed to connect the external P, T lines to the P, T channels inside the ED elements of the Directional Valve Assembly and to connect to the LS ports of the elements equipped with LS channels. The main functions are: to provide LS controlled pressure compensated flow to the Directional Valve Elements, to limit the primary pressure in the P channels and to unload to Tank the inlet flow when all hydraulic operations must be inhibited, by de-energizing the VEI solenoid operated cartridge.
They are available in two versions: TE-07-01-03-... suitable for fixed displacement pumps, and TE-07-02-03-... for variable displacement pumps. The TE-07-__ inlet elements are manufactured with body made of Black Anodized Aluminium (AL). Port sizes are G 1/2, with LS and M test points G1/4.
NOTE: the mechanical locking of the 3-way pressure compensator can be supplied upon request.

Technical data

General		
TE-07-_ _-	kg (lbs)	1.80 (3.98)
Ambient Temperature	°C (°F)	–20....+50 (-4....+122) (NBR seals)
Hydraulic		
Maximum pressure	bar (psi)	250 (3625)
Maximum inlet flow	l/min (gpm)	90 (23.8)
Rated flow at P1	l/min (gpm)	0-30 (0-7.9)
Hydraulic fluid General properties: it must have physical lubricating and chemical properties suitable for use in hydraulic systems such as, for example:		Mineral oil based hydraulic fluids HL (DIN 51524 part 1). Mineral oil based hydraulic fluids HLP (DIN 51524 part 2). For use of environmentally acceptable fluids (vegetable or polyglycol base) please consult us.
Fluid Temperature	°C (°F)	–20....+80 (-4....+176) (NBR)
Permissible degree of fluid contamination		ISO 4572: $\beta_x \geq 75$ X=10...12 ISO 4406: class 19/17/14 NAS 1638: class 8
Viscosity range	mm^2/s	5....420

Note
For applications with different specifications consult us

RF 16300/07/02 2016, Bosch Rexroth AG

469

Ordering details

01	02	03	04	05	06	07	08	09	10
TE	- 07	-	- 03	-	-	-	-	-	-

Family

01	Inlet Elements	**TE**

Configuration

02	with limitation of primary pressure, LS compensated flow control and solenoid operated unloading	**07**

Application Scheme

03	For open center or open/closed center	**01**
	For closed center	**02**

Ports

04	G 1/2 DIN 3852	**03**

Pressure Relief range

05	50-210bar (725-3046 psi)	**01**
	100-250bar (1450-3626 psi)	**02**

Restrictor adjustment

06	Flow restrictor with screw type adjustment	**S**
	Flow restrictor with hand-knob adjustment	**K**

3-way compensator type

07	Without mechanical blocking	**00**
	With mechanical blocking [1]	**01**

Cartridge voltage supply

08	No cartridge	**No code**
	Cartridge without coil	**00**
	12V DC	**OB**
	24V DC	**OC**
	26V DC	**AC**

Electric connections

09	No cartridge	**No code**
	Without coils	**00**
	With coils, without mating connector DIN EN 175301-803 [2]	**01**
	With coils, with bi-directional diode, without mating connector vertical Amp-Junior	**03**
	With coils,with bi-directional diode, without mating connector DT04-2P	**07**

Options

10	No cartridge	**No code**
	Standard	**00**
	Push-button type manual override	**OP**
	Push and twist type manual override	**SG**

1) Necessary for open/closed center configuration.
2) For connectors ordering code see data sheet RE 18325-90.

Symbol

TE-07-01-03 Open center, Open/Closed center

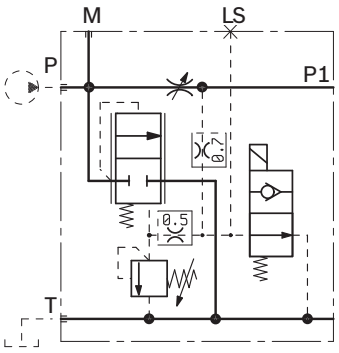

TE-07-02-03 Closed center

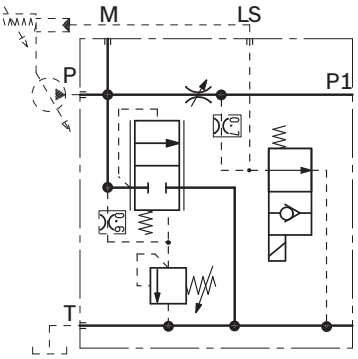

Characteristic curves

Pressure drop through compensator

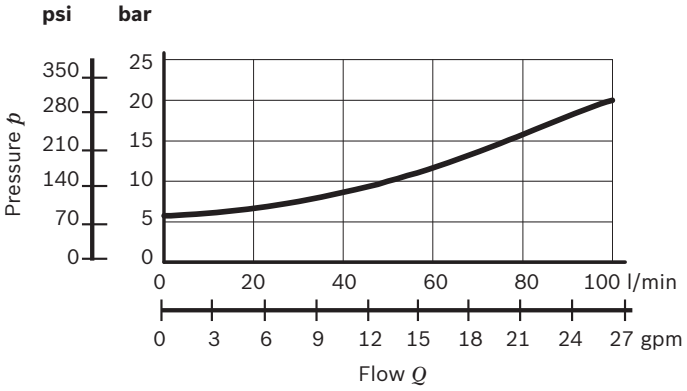

External dimensions and fittings

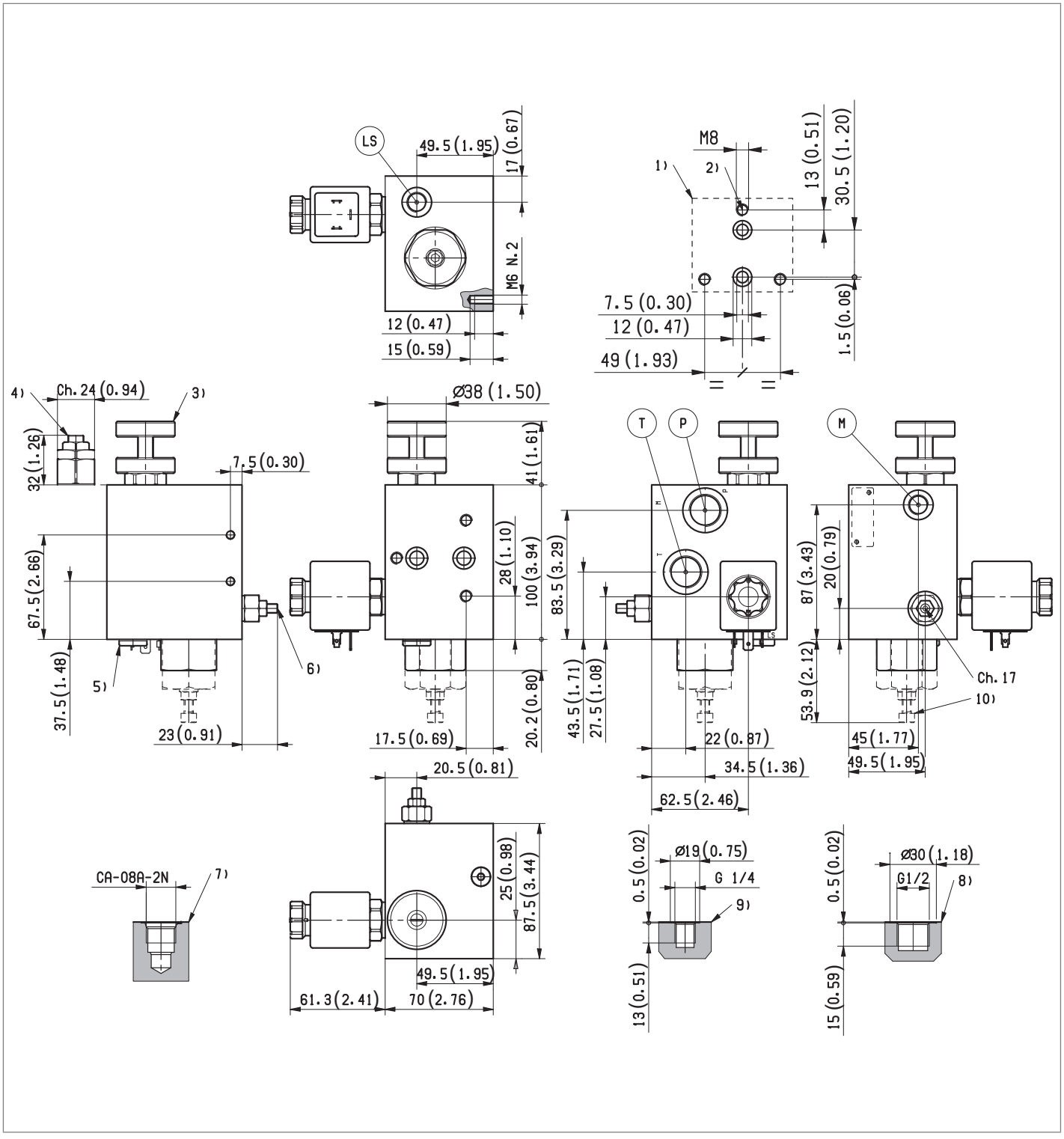

1 Flange specifications for coupling to the ED Directional Valve Elements.
2 For tie rod and tightening torque information see data sheet RE 18301-90.
3 Flow restrictor with hand-knob adjustment.
4 Flow restrictor with screw type adjustment.
5 Plug G 1/4 for version TE-07-01-03-...
6 Pressure relief cartridge VS-5-C.
7 Cavity for Solenoid Cartridge, VEI type.
8 Hydraulic Ports P-T G 1/2.
9 G 1/4 ports for pressure gauge connection and LS signal.
10 Overall dimension, including compensator, for TE-07-__-03-__-_-01.

Dimensions [mm (inches)]

Inlet Elements
with primary pressure relief valve
and proportional LS controlled 3-way flow regulator

TE-10-__-

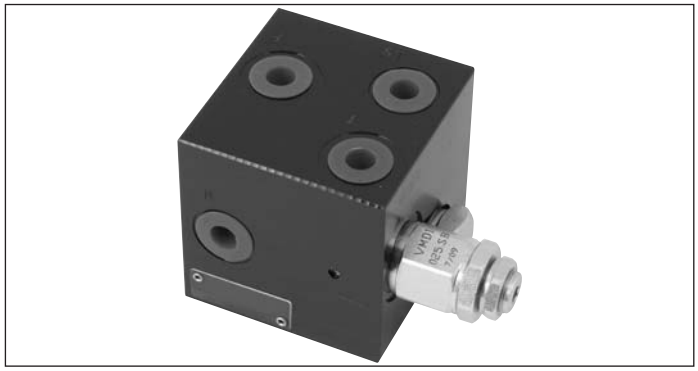

Description

The inlet elements TE-10-__ are employed to connect the external P, T lines to the P, T channels inside the ED elements of the Directional Valve Assembly and to connect to the LS ports of the ED elements equipped with LS channels. The LS signal is sent downstream of the proportional flow restrictor VEP: it provides a proportional pressure compensated flow, across the VEP, for the ED elements of the Directional Valve Assembly, and it unloads the excess flow. The main functions are: to limit the maximum primary pressure in the P line and to supply proportional pressure compensated flow the ED elements of the Directional Valve Assembly. TE-10-__ inlet elements are available with body made of Black Anodized Aluminium (Al).
P and T Port sizes can be G 3/8, G 1/2, or SAE 8. Test point M is G 1/4 on BSPP versions, and SAE 4 in SAE versions.

Technical data

General		
TE-10-02-00-	kg (lbs)	0.83 (1.83)
TE-10-03-00-	kg (lbs)	0.88 (1.94)
TE-10-56-00-	kg (lbs)	0.88 (1.94)
TE-10-02-S_-	kg (lbs)	1.08 (2.37)
TE-10-03-S_-	kg (lbs)	1.16 (2.57)
TE-10-56-S_-	kg (lbs)	1.16 (2.57)
Max rated flow at P1		
TE-10-02-00-	l/min (gpm)	0-12 (0-3.1)
TE-10-03-00-	l/min (gpm)	0-32 (0-8.4)
TE-10-56-00-	l/min (gpm)	0-32 (0-8.4)
TE-10-02-S_-	l/min (gpm)	0-12 (0-3.1)
TE-10-03-S_-	l/min (gpm)	0-32 (0-8.4)
TE-10-56-S_-	l/min (gpm)	0-32 (0-8.4)
Ambient Temperature	°C (°F)	–20....+50 (-4....+122) (NBR seals)
Hydraulic		
Maximum pressure	bar (psi)	210 (3045)
Maximum inlet flow	l/min (gpm)	40 (10.6)
Rated flow at P1	l/min (gpm)	32 (8.45)
Hydraulic fluid General properties: it must have physical lubricating and chemical properties suitable for use in hydraulic systems such as, for example:		Mineral oil based hydraulic fluids HL (DIN 51524 part 1). Mineral oil based hydraulic fluids HLP (DIN 51524 part 2). For use of environmentally acceptable fluids (vegetable or polyglycol base) please consult us.
Fluid Temperature	°C (°F)	–20....+80 (-4....+176) (NBR)
Permissible degree of fluid contamination		ISO 4572: $\beta_x \geq 75$ X=10...12 ISO 4406: class 19/17/14 NAS 1638: class 8
Viscosity range	mm^2/s	20....380

Note

For applications with different specifications consult us

Ordering details

01	02	03	04	05	06	07	08	09
TE -	10 -		-		-	AL -		-	-	-	-	-	

Family

01	Inlet Elements	**TE**

Configuration

02	Configuration with primary pressure relief valve and proportional LS controlled 3-way flow regulator	**10**

Ports

03	G 3/8 DIN 3852	**02**
	G 1/2 DIN 3852	**03**
	3/4-16 UNF-2B (SAE8)	**56**

Primary Pressure Relief range

04	Without primary pressure relief valve	**00**
	25-120bar (362-1740 psi)	**SN**
	40-200bar (580-2900 psi)	**SB**
	200-350bar (2900-5076 psi)	**SV**

Material

05	Aluminium	**AL**

Cartridge voltage supply

06	No cartridge	**No code**
	Cartridge without coil	**00**
	12V DC	**OB**
	24V DC	**OC**

Electric connections

07	No cartridge	**No code**
	Without coils	**00**
	With coils, without mating connector DIN EN 175301-803 [1)]	**01**

P1 Max Flow

08	No cartridge	**No code**
	12 l/min (3.2 gpm)	**12**
	30 l/min (7.9 gpm)	**30**

Options

09	No cartridge	**No code**
	Standard	**00**
	Screw type manual override	**EF**

1) For connectors ordering code see data sheet RE 18325-90.

Symbol

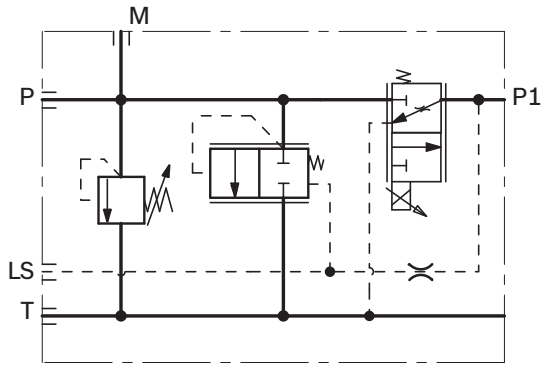

Characteristic curves

Pressure drop through compensator

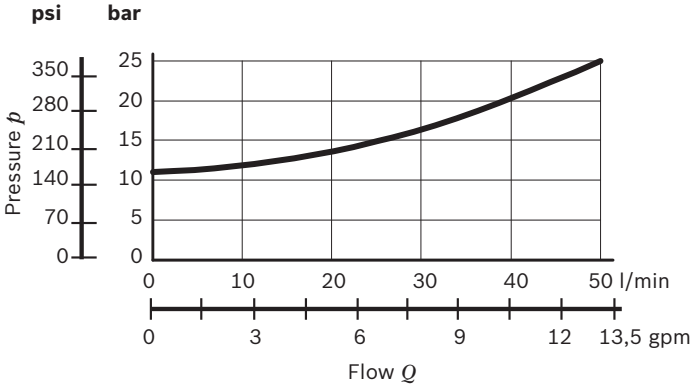

External dimensions and fittings

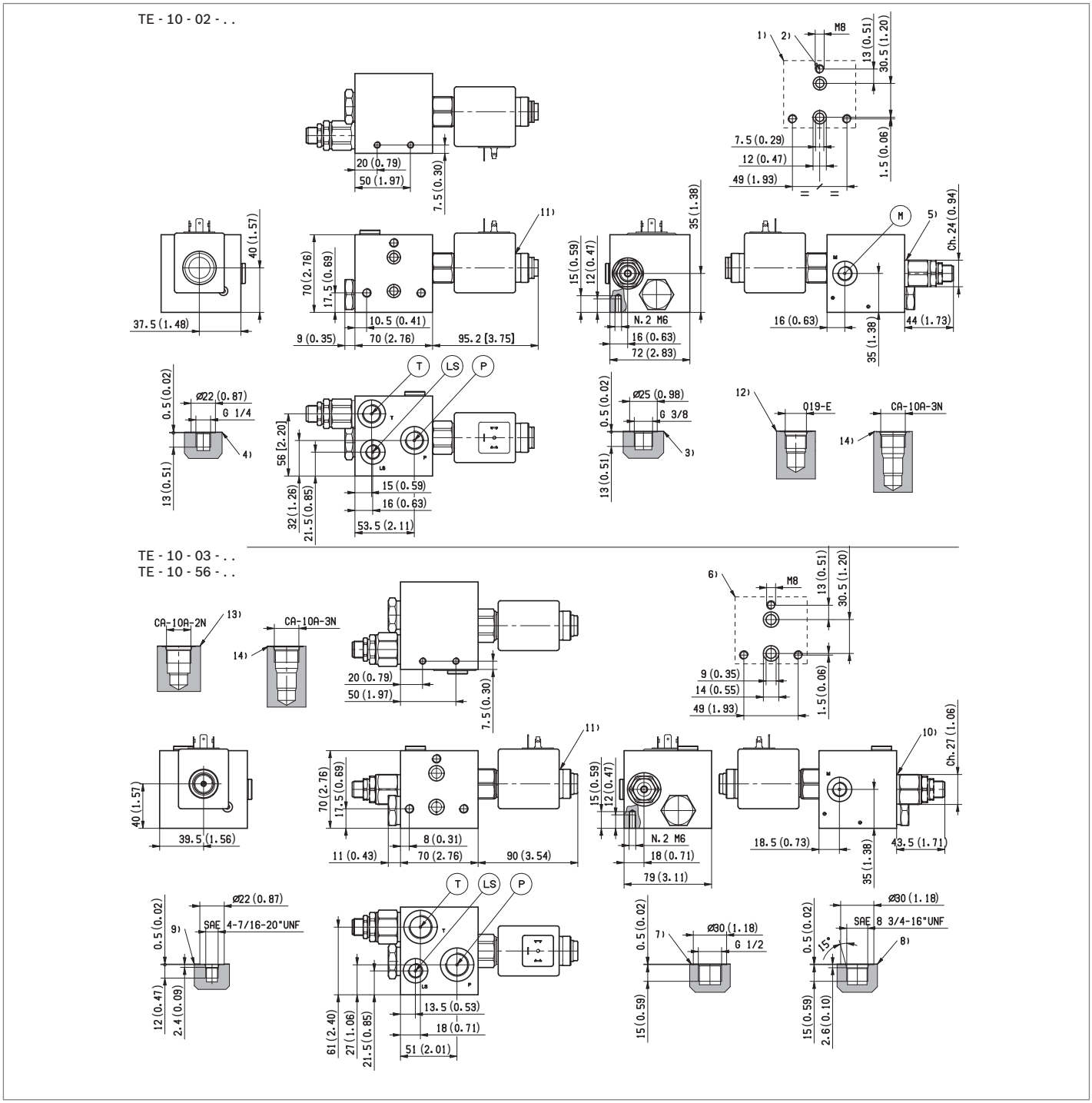

1 Flange specifications for coupling to the ED Directional Valve Elements (versions TE-10-02...).
2 For tie rod and tightening torque information see data sheet RE 18301-90.
3 Hydraulic Ports P and T size G 3/8, for versions TE-10-02...
4 Port for pressure gauge connection M size G 1/4, for versions TE-10-02... and TE-10-03...
5 Primary Pressure Relief Cartridge VMD1025 for versions TE-10-02... (refer to RE 18301-91).
6 Flange specifications for coupling to the ED Directional Valve Elements (versions TE-10-03..., and TE-10-56-...).
7 Hydraulic Ports P and T size G 1/2, for versions TE-10-03...
8 Hydraulic Ports P and T size SAE 8, for versions TE-10-56...
9 Port for pressure gauge connection M size SAE 4.
10 Primary Pressure Relief Cartridge VMD1040 for versions TE-10-03..., and TE-10-56-... (refer to RE 18301-91).
11 Proportional Solenoid Cartridge, VEP type, (refer to RE 18301-91).
12 Cavity for Primary Pressure Relief Cartridge VMD1025.
13 Cavity for Primary Pressure Relief Cartridge VMD1040.
14 Cavity for Proportional Solenoid cartridge VEP.

Dimensions [mm (inches)]

Inlet Elements
with Pressure Reducing Valve on the P line

TE-11-__-

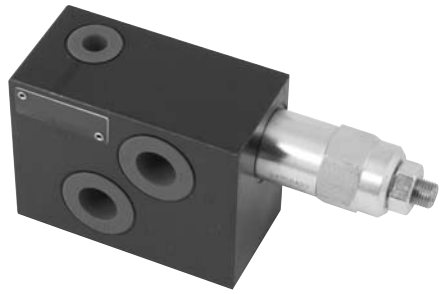

Description

The inlet elements TE-11-__ are employed to connect the external P and T lines to the P and T channels inside the ED elements of the Directional Valve Assembly. They incorporate a 3-way pressure reducing / relieving cartridge which allows to control the primary pressure in the P line of the ED elements. The primary pressure can be adjusted and can be checked and through the Test Point port M.
The TE-11-__ inlet elements are available with body made of Black Anodized Aluminium (AL).
Hydraulic Ports P and T can be size G 3/8, G 1/2 or SAE 8 (3/4" 16 UNF). Test point M is G 1/4 on BSPP versions, and SAE 4 in SAE versions.

Technical data

General		
TE-11-02-00-	kg (lbs)	0.54 (1.19)
TE-11-03-00-	kg (lbs)	0.54 (1.19)
TE-11-56-00-	kg (lbs)	0.54 (1.19)
TE-11-02-S_-	kg (lbs)	0.80 (1.76)
TE-11-03-S_-	kg (lbs)	0.80 (1.76)
TE-11-56-S_-	kg (lbs)	0.80 (1.76)
Ambient Temperature	°C (°F)	–20....+50 (-4....+122) (NBR seals)
Hydraulic		
Maximum pressure	bar (psi)	250 (3625)
Maximum inlet flow	l/min (gpm)	50 (13.2)
Hydraulic fluid General properties: it must have physical lubricating and chemical properties suitable for use in hydraulic systems such as, for example:		Mineral oil based hydraulic fluids HL (DIN 51524 part 1). Mineral oil based hydraulic fluids HLP (DIN 51524 part 2). For use of environmentally acceptable fluids (vegetable or polyglycol base) please consult us.
Fluid Temperature	°C (°F)	–20....+80 (-4....+176) (NBR)
Permissible degree of fluid contamination		ISO 4572: $\beta_x \geq 75$ X=10...12 ISO 4406: class 19/17/14 NAS 1638: class 8
Viscosity range	mm^2/s	5....420

Note
For applications with different specifications consult us

Ordering details

01		02		03		04	05		06
TE	**-**	**11**	**-**		**-**			**-**	**AL**

Family

01	Inlet Elements	**TE**

Configuration

02	with pressure reducing valve on the P line	**11**

Ports

03	G 3/8 DIN 3852	**02**
	G 1/2 DIN 3852	**03**
	3/4-16 UNF-2B (SAE8)	**56**

Pressure Reducing Valve range

04	Pressure range 2-25 bar (30-350 psi)	**1**
	Pressure range 10-50 bar (145-758 psi)	**2**
	Pressure range 28-80 bar (400-1160 psi)	**3**

Type of pressure adjustment

05	Screw type adjuster	**S**
	Hand-knob type adjuster	**K**

Material

06	Aluminium	**AL**

Symbol

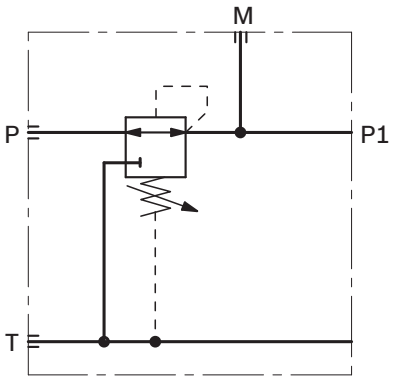

External dimensions and fittings

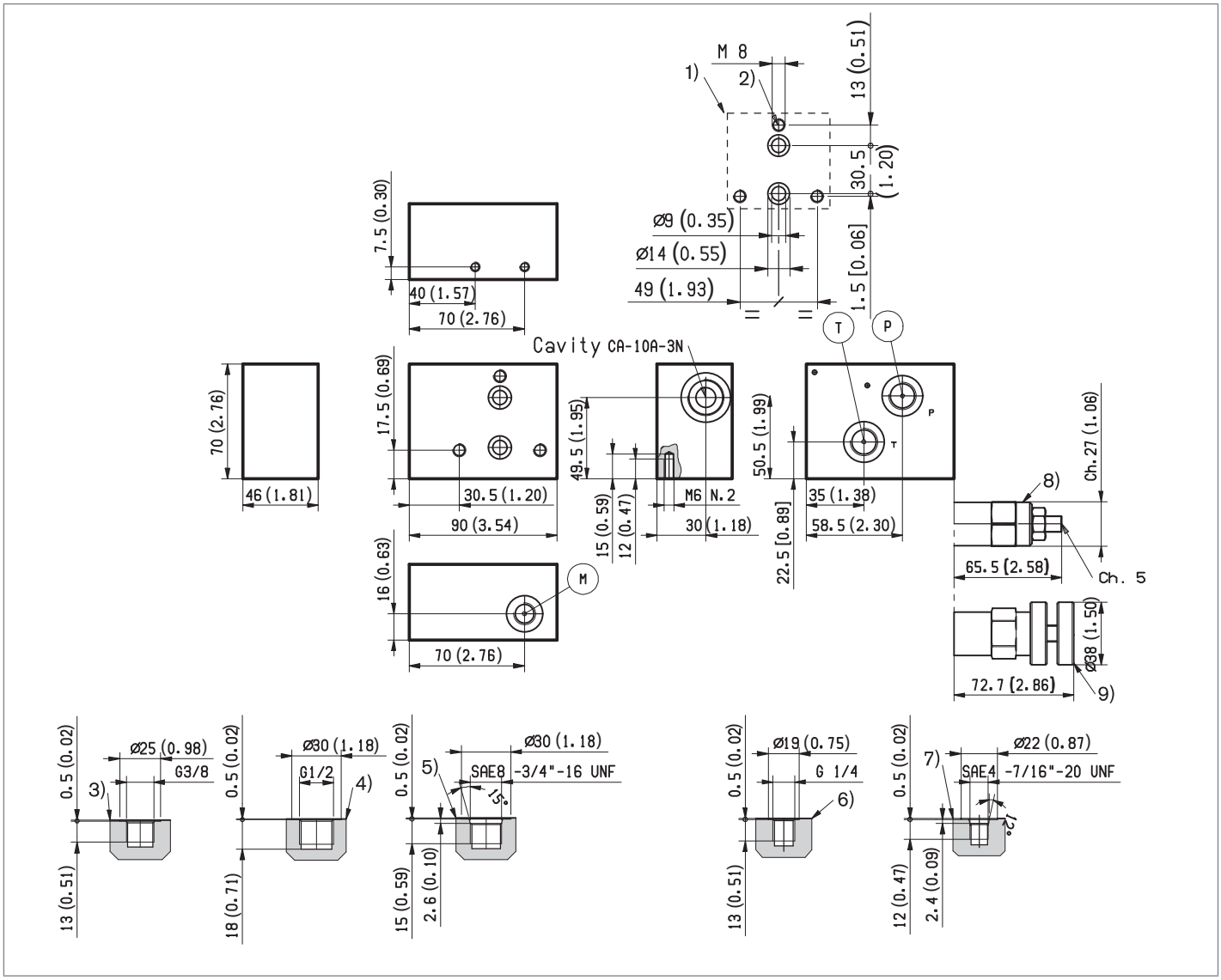

1 Flange specifications for coupling to the ED Directional Valve Elements (for Version TE-11-02...).
2 For tie rod and tightening torque information see data sheet RE 18301-90.
3 Hydraulic Ports P-T G 3/8, for Inlet Elements TE-11-02...
4 Hydraulic Ports P-T G 1/2, for versions TE-11-03-...
5 Hydraulic Ports P-T SAE 8, for versions TE-11-56.
6 Test Point port (M) G 1/4, for Inlet Elements TE-11-02... and TE-11-03...
7 Test Point port SAE 4, for versions TE-11-56-...
8 Pressure Reducing/Relieving Cartridge VRPR, with screw type adjuster.
9 Pressure Reducing/Relieving Cartridge VRPR, with hand-knob type adjuster.

Dimensions [mm (inches)]

Inlet Elements
with by-pass compensator, LS relief for open center control block and solenoid operated unloading

TE-13-__-

Description

The inlet elementsTE-13-__ are employed to connect the external P, T lines to the P, T channels inside the ED elements of the Directional Valve Assembly and to connect the LS line for inlet flow control. An LS controlled 3-way compensator provides pressure compensated flow to the ED elements of the Directional Valve Assembly, any excess flow si bypassed to tank at LS pressure plus compensator spring bias. When the ED elements are in neutral position, the compensator bypasses the entire flow to tank at a bypass pressure equal to the compensator spring bias. In case the LS pressure reaches the relief pressure setting,the compensator unloads to tank the entire flow at relief pressure plus compensator spring bias The TE-13 can be equipped with a NO or NC Solenoid Unloading VEI Cartridge, which can be employed to unloads to tank the LS signal and bypasses the entire flow to tank at a bypass pressure equal to the compensator spring bias. The TE-13 is provided with non compensated bleed down orifice. The TE-13-.... is made of zinc plated cast iron. The coil S8-356 must be ordered separately (refer to RE18325-90).

Technical data

General		
TE13	kg (lbs)	3.6 (7.9)
Ambient Temperature	°C (°F)	–20....+50 (-4....+122) (NBR seals)
Hydraulic		
Maximum pressure	bar (psi)	310 (4500)
Maximum inlet flow for TE-13-_ _-3 version	l/min (gpm)	33 (8.7)
Maximum inlet flow for TE-13-_ _-5 version	l/min (gpm)	50 (13.2)
Maximum inlet flow for TE-13-_ _-8 version	l/min (gpm)	80 (21.1)
Maximum inlet flow for TE-13-_ _-0 version	l/min (gpm)	120 (31.7)
Rated flow at P1	l/min (gpm)	Variable [1]
Hydraulic fluid General properties: it must have physical lubricating and chemical properties suitable for use in hydraulic systems such as, for example:		Mineral oil based hydraulic fluids HL (DIN 51524 part 1). Mineral oil based hydraulic fluids HLP (DIN 51524 part 2). For use of environmentally acceptable fluids (vegetable or polyglycol base) please consult us.
Fluid Temperature	°C (°F)	–20....+80 (-4....+176) (NBR)
Permissible degree of fluid contamination		ISO 4572: $\beta_x \geq 75$ X=10...12 ISO 4406: class 19/17/14 NAS 1638: class 8
Viscosity range	mm^2/s	5....420

1) The maximum regulated flow on P1 line is related both to the pressure drop of the ED valve assembled on the group and their spools size.

Note

For applications with different specifications consult us

Ordering details

01	02	03	04	05	06	07	08	09	10
TE	- 13	-	-	-	-	-	-	-	- CI

Family

01	Inlet Elements	**TE**

Configuration

02	Function with fixed displacement pump (open centre)	**13**

Ports

03	G 1/2 DIN 3852	**03**
	G 3/4 DIN 3852	**04**
	7/8-14 UNF-2B (SAE10)	**57**

Spool dimension

04	Maximum inlet flow 33 l/min (8.7 gpm)	**3**
	Maximum inlet flow 50 l/min (13.2 gpm)	**5**
	Maximum inlet flow 80 l/min (21.1 gpm)	**8**
	Maximum inlet flow 120 l/min (31.7 gpm)	**0**

Pressure Relief range

05	25-120bar (350-1750 psi)	**1**
	40-200bar (580-2900 psi)	**2**
	200-310bar (2900-4500 psi)	**3**

Compensator Cracking Pressure

06	14 bar (203 psi) [1]	**14**
	18 bar (261 psi)	**18**
	Adjustable 8-18 bar (116-261 psi) Standard setting 10 bar (145psi)	**R8**
	Adjustable 10-18 bar (116-261 psi) with locking option Standard setting 12 bar (174 psi) [2]	**BR**

LS bleed down orifice

07	Diam. 0.3 (Ø0.5+wire0.4) [1]	**C**
	Diameter 0.4	**E**
	Diameter 0.5	**G**

Unloading Valve

08	Without valve (ordered separately)	**0**
	Standard VEI normally open	**A**
	Standard VEI normally closed	**C**
	Plugged	**P**

Pilot Restrictor

09	Standard	**0I**
	STR14CI [3]	**CI**

Material

10	Cast Iron	**CI**

1) Recommended version.
2) Suggested for open/closed center configuration.
3) STR14CI not available for TE-13 with SAE 10 ports.

Symbol

Without unloading valve and fixed pilot restrictor

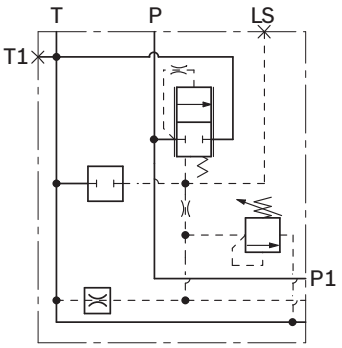

With unloading valve and STR pilot restrictor

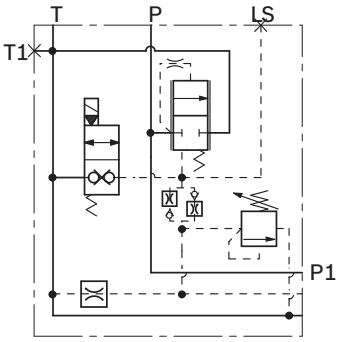

Characteristic curves

Pressure drop trough compensator

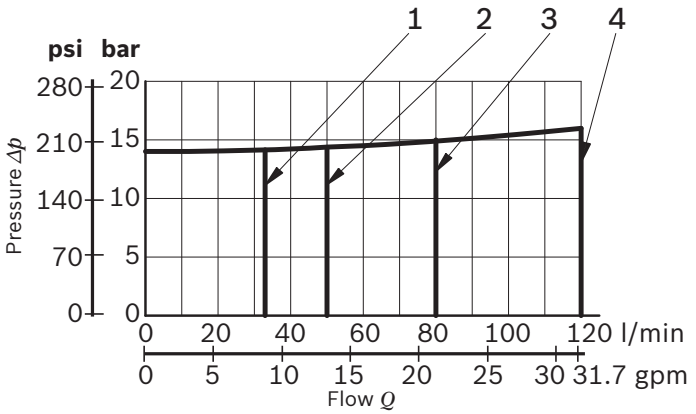

Model	Curve no.
TE-13-_ _-3_- 14 Version	1
TE-13-_ _-5_- 14 Version	2
TE-13-_ _-8_- 14 Version	3
TE-13-_ _-0_- 14 Version	4

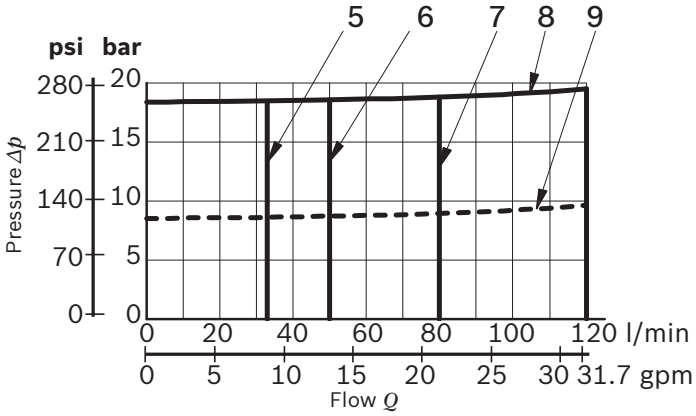

Model	Curve no.
TE-13-_ _-3_- 18/R8 Version	5
TE-13-_ _-5_- 18/R8 Version	6
TE-13-_ _-8_- 18/R8 Version	7
TE-13-_ _-0_- 18/R8 Version	8
TE-13-_ _-0_- R8 lowest adjustable setting	9

Measured with hydraulic fluid ISO-VG32 at 45° ±5 °C (113° ±9 °F); ambient temperature 20 °C (68 °F).

Flow rate compensation (P1)

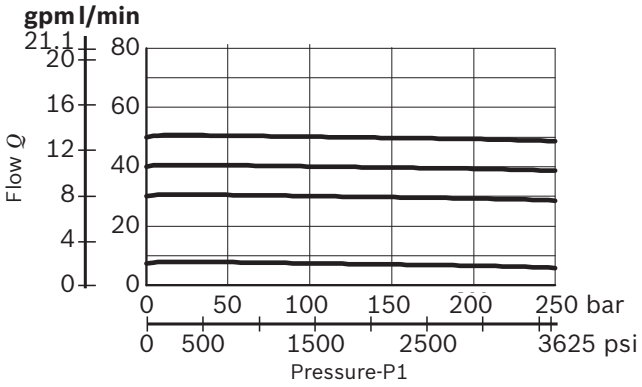

LS drain

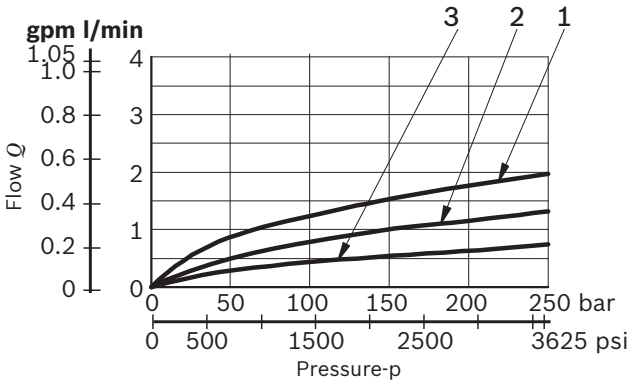

Fixed orefice	Curve no.
Ø0.5mm	1
Ø0.4mm	2
Ø0.3mm	3

External dimensions and fittings

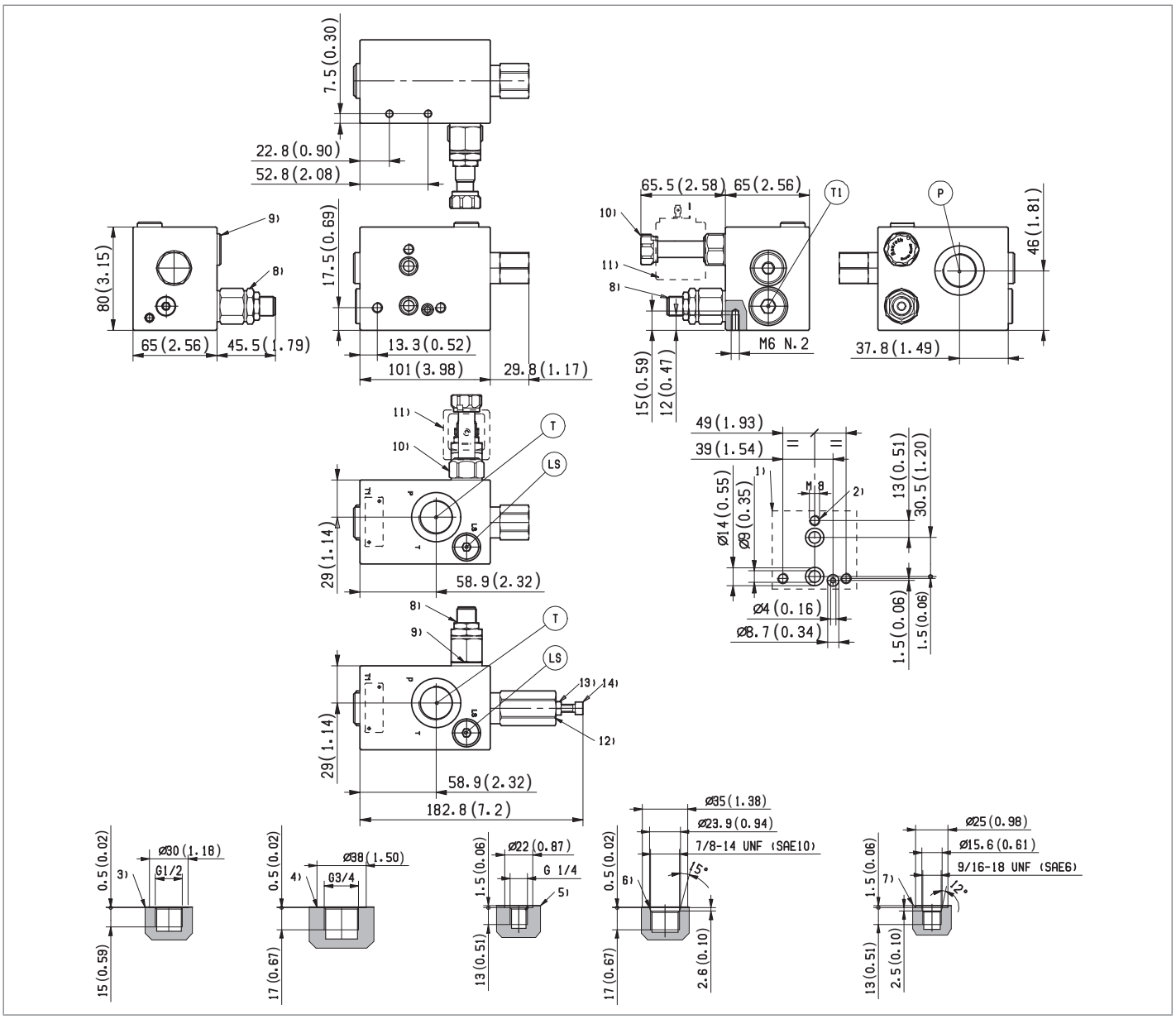

1 Flange specifications for coupling to the ED Directional Valve Elements.
2 For tie rod and tightening torque information see data sheet RE 18301-90.
3 Hydraulic ports P and T G1/2, inlet elements TE-13-03-...
4 Hydraulic ports P and T G3/4, inlet elements TE-13-04-...
5 Test point LS port G1/4, inlet elements TE-13-03-..and TE-13-04.
6 Hydraulic ports P and T SAE10, inlet element TE-13-57-...
7 Test point LS port SAE6, inlet element TE-13-57-...
8 Pressure relief cartridge VMD1020, with screw type adjuster.
9 Unloading valve CA-08A-2N cavity plug TE-13-..-..-..-.P-.
10 Solenoid Unloading cartridge VEI-8A-2T-06... type.
11 VEI Coil S8-356 ordered separately.
12 Both adjustable cracking pressure version (R8) and locking option (BR).
13 Maximum torque of the nut 5-6 Nm (R8 and BR).
14 Maximum torque of the locking screw (BR) 9-10 Nm.

Inlet Elements
with LS connections and double pressure relief valve (P and LS line)

TE-16-__-

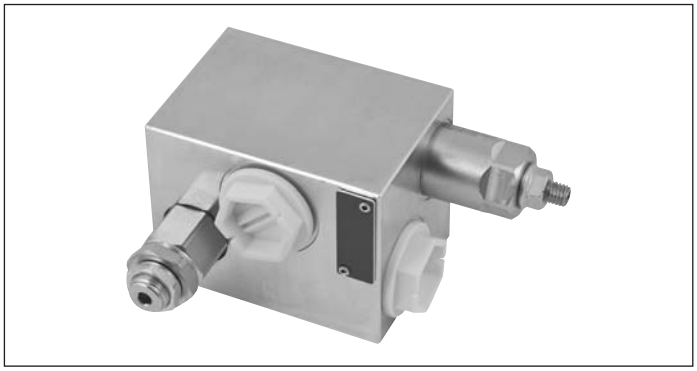

Description

The inlet elements TE-16-__ are employed to connect the external P,T lines to the P,T channels inside the ED elements of the Directional Valve Assembly and to connect the LS ports of the elements equipped with LS channels. They incorporate two pressure relief cartridge which limits the maximum primary pressure in the P line and the maximum load pressure in the LS line and unloads to tank any excess flow.

The TE-16-__ inlet elements are available with body made of yellow zinc plated (Cr+3) cast iron (CI).

Ports sizes can be G 1/2 or G 3/4 or SAE10 (7/8” 14 UNF).

LS ports are G 1/4 for BSPP version, and SAE 4 (7/16” 20 UNF) for “UNF” version.

Technical data

General		
TE16...	kg (lbs)	2.6 (6)
Ambient Temperature	°C (°F)	–20....+50 (-4....+122) (NBR seals)
Hydraulic		
Maximum pressure	bar (psi)	310 (4500)
Maximum flow	l/min (gpm)	120 (31.7)
Hydraulic fluid General properties: it must have physical lubricating and chemical properties suitable for use in hydraulic systems such as, for example:		Mineral oil based hydraulic fluids HL (DIN 51524 part 1). Mineral oil based hydraulic fluids HLP (DIN 51524 part 2). For use of environmentally acceptable fluids (vegetable or polyglycol base) please consult us.
Fluid Temperature	°C (°F)	–20....+80 (-4....+176) (NBR)
Permissible degree of fluid contamination		ISO 4572: $\beta_x \geq 75$ X=12...15 ISO 4406: class 19/17/14 NAS 1638: class 8
Viscosity range	mm^2/s	5....420

Note

For applications with different specifications consult us

RE 16300 14/02 2016 Bosch Rexroth AG

485

Ordering details

01		02		03		04		05		06		07
TE	**-**	**16**	**-**		**-**		**-**		**-**		**-**	**CI**

Family

01	Inlet Elements	**TE**

Configuration

02	Inlet plate for LS pump system with double check valve (on P and LS line)	**16**

Ports

03	G 1/2 DIN 3852	**03**
	G 3/4 DIN 3852	**04**
	7/8-14 UNF-2B (SAE10)	**57**

Primary pressure relief range

04	35-140 bar (508-2030 psi)	**10**
	70-280 bar (1015-4060 psi)	**20**
	140-420 bar (2030-6091 psi)	**35**
	Plugged	**0P**

Secondary pressure relief valve

05	25-120 bar (362-1470 psi)	**SN**
	40-200 bar (580-2900 psi)	**SB**
	200-350 bar (2900-5076 psi)	**SV**
	Plugged	**0P**

Size of drain orifice for LS

06	Closed	**0X**
	Diam. 0.3 (Ø0.5+wire0.4) [1]	**0C**
	Diameter 0.4	**0E**
	Diameter 0.5	**0G**

Material

07	Cast Iron	**CI**

1) Recommended version.

Symbol

TE-16-__-

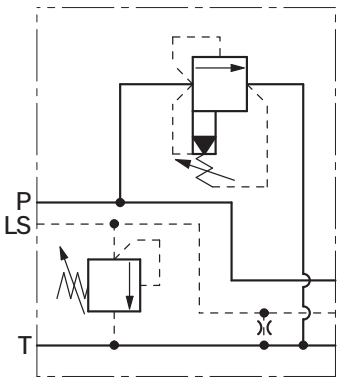

TE-16-__- 0P - 0P

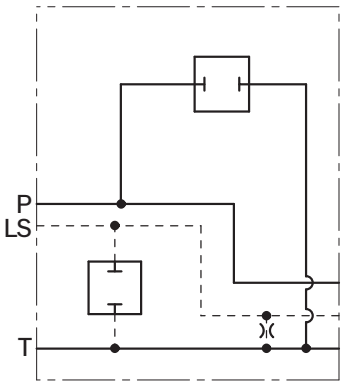

External dimensions and fittings

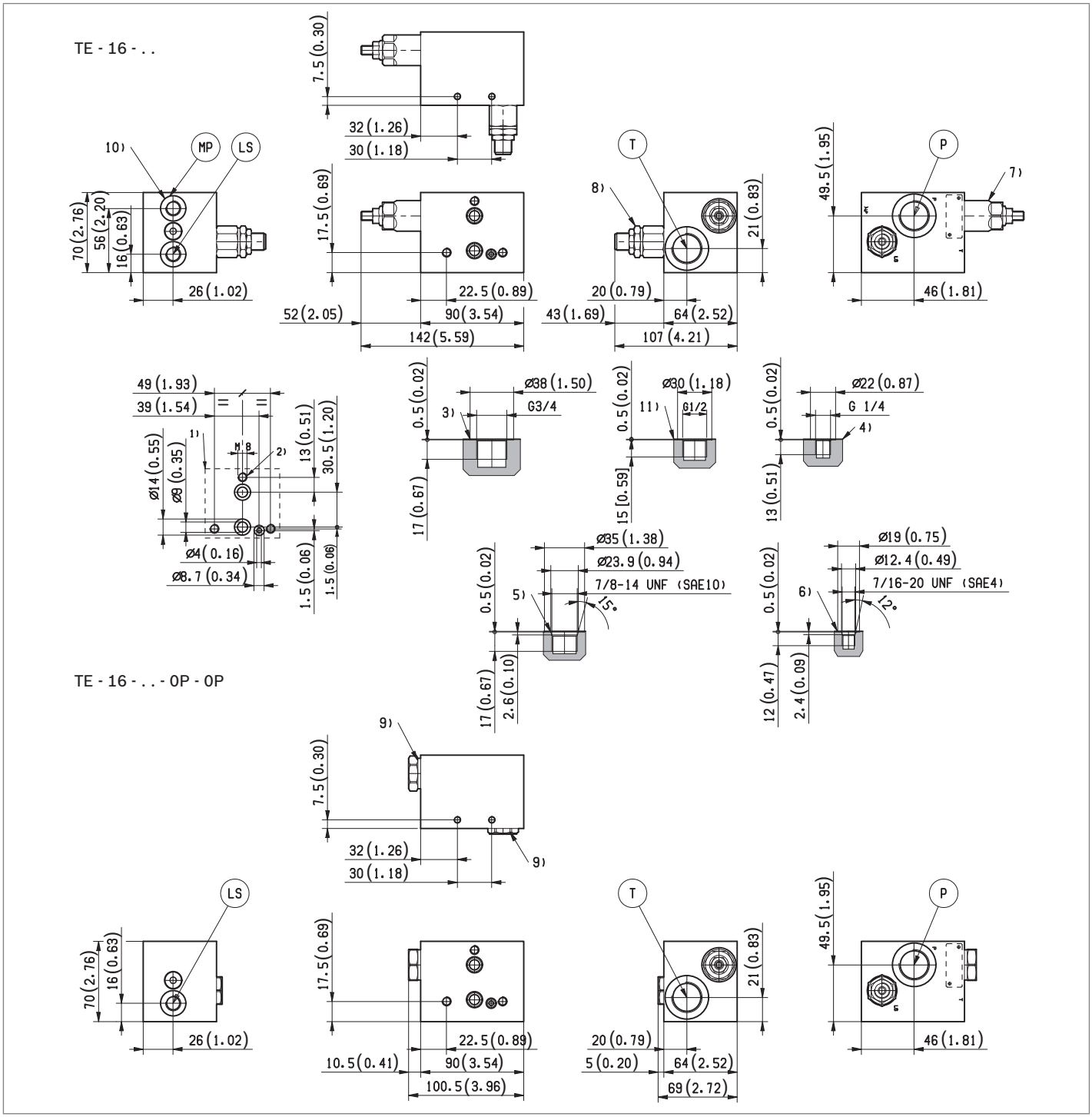

1 Flange specifications for coupling to the ED Directional Valve Elements
2 Three threaded holes M8 for coupling of the ED Directional Valve Elements (refer to RE 18301-90/10.09).
3 Hydraulic ports P and T G 3/4 , inlet elements TE-16-04-...
4 Hydraulic ports MP,LS, G 1/4, inlet elements TE-16-03-... and hydraulic ports LS G 1/4, inlet elements TE-16-04-..
5 Hydraulic ports P and T SAE10, inlet elements TE-16-57-...
6 Hydraulic ports LS SAE4, inlet elements TE-16-57-...
7 Primary pressure relief cartridge (P line) VSPN-10A, with screw type adjuster (refer to RE18318-08-09.09).
8 Secondary pressure relief cartridge (LS line) VMD1020, with screw type adjuster.
9 plugs for primary and secondary pressure relief valves
10 Hydraulic ports MP G 1/4, available only for inlet elements TE-16-03-..
11 Hydraulic ports P and T G 1/2, inlet elements TE-16-03-..

Dimensions [mm (inches)]

Modular directional valves

Directional valve elements, EDB series

Designation	Description	Ports/Size	Code	Data sheet	Page
4/3 - 4/2 Directional valve elements with or without secondary relief valves, and with or without LS connections	EDBZ	G 3/8, SAE6, M16x1.5 / Size 4	B8_08_	18300-52	491
4/3 Directional valve elements with or without secondary relief valves, with or without LS connections, and with PO check valves	EDBZ-VR	G 3/8, SAE6, M16x1.5 / Size 4	B8_48_	18300-53	499
4/2 Directional valve elements with or without secondary relief valves, with or without LS connections, and with 2/2 solenoid cartridge valve	EDBZ-VEI	G 3/8, SAE6, M16x1.5 / Size 4	B8_58E401_	18300-54	507
4/3 4/2 Directional valve elements with proportional control and with or without LS connections.	EDB-P	G 3/8, SAE6, M16x1.5 / Size 4	B8_80__S_	18300-55	515

4/3 - 4/2 Directional valve elements with or without secondary relief valves, with or without LS connections

B8_08... (EDBZ)

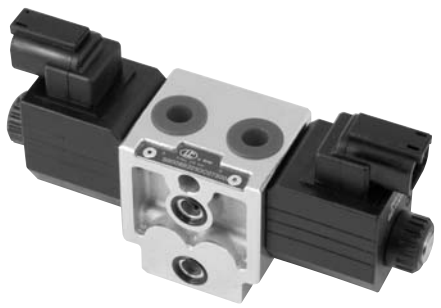

Size 4
Series 00
Maximum operating pressure 310 bar (4500 psi)
Maximum flow 25 l/min (6.6 gpm)
Port connections G 3/8 SAE6 - M16x1.5

General specifications

Valve elements with 4 ways and 3, or 2, positions.
Control spools directly operated by solenoids with removable coils.
In the de-energized condition, the control spool is held in the central position by return springs.
Wet pin tubes for DC coils, with push rod for mechanical override; burnish surface treatment.
Coils can be rotated 360° around the tube.
Manual override (push-button or screw type) available as option.

Contents

Ordering details	2
Symbols	2
Functional description	4
Technical data	4
Characteristic curves	6
External dimensions and fittings	7
Electric connection	8

RF 18300/52/02 2016, Bosch Rexroth AG

Ordering details

01	02	03	04	05	06	07	08	09	10
B	**8**		**08**					**0**	

Family

01	Directional Valve elements EDB	**B**

Type

02	Size 4	**8**

Configuration

03	Standard	**0**
	With secondary valve on A	**1**
	With channels for Load Sensing	**4**

Coil type

04	C36	**08**

Spool variants[1)]

05	4/3 operated on both sides a and b	**_ 2 _ _**
	4/2 operated on side a only	**_ 3 _ _**

Voltage supply		**31**	**07**	**04**	**03**	**01**	**00**	
06	Without coil	–	–	–	–	–	●	**00**
	12V DC	●	●	●	●	●	–	**OB**
	13V DC	–	–	–	–	●	–	**AD**
	24V DC	●	●	●	●	●	–	**OC**
	27V DC	–	–	–	–	●	–	**AC**
	48V DC	–	–	●	–	●	–	**OD**
	110V DC	–	–	–	–	●	–	**OE**
	24V AC (21.5 DC)	–	–	–	–	●	–	**OV**
	110V AC (98 DC)	–	–	–	–	●	–	**OW**
	230V AC (207 DC)	–	–	–	–	●	–	**OZ**

Electric connections

07	Without coils	**00**
	With coils, without mating connector DIN EN 175301-803	**01** [2)]
	With coils, with bi-directional diode, without mating connector vertical Amp-Junior	**03**
	With coils, with bi-directional diode, without mating connector horizontal Amp-Junior	**04**
	With coils, with bi-directional diode, without mating connector DT04-2P	**07**
	With coils and bipolar sheathed lead 350mm (13,8 in) long	**31**

Ports

08	G 3/8 DIN 3852	**3**
	M 16x1,5 DIN 3852	**U**
	9/16-18 UNF 2-B (SAE6)	**B**

Secondary valves setting

09	50-210 bar (725-3045 psi)	**0** [3)]
	100-310 bar (1450-4500 psi)	**1**
	25-50 bar (362-725 psi)	**2**

Options

10	No options	**No code**
	Standard	**0**
	Push-button type manual override	**P**
	Screw type manual override	**F**

● = Available – = Not available

Symbols

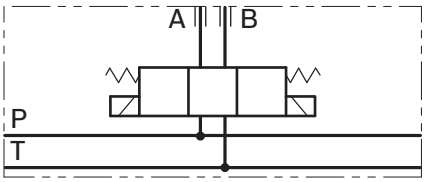

= 0

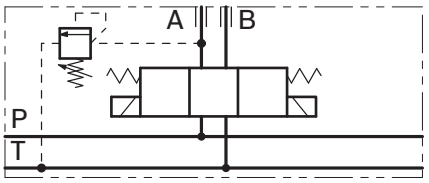

= 1

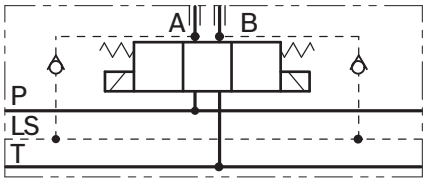

= 4

1) The required hydraulic symbol and spool variant can be chosen by consulting page 3.
2) For connectors ordering code see data sheet RE 18325-90.
3) Without secondary valve (versions B80__; B84__), the standard configuration corresponds to “0”.
The secondary valves have a maximum flow capacity of 6 l/min (1.6 gpm).

Spool variants

08_ 2 _ _

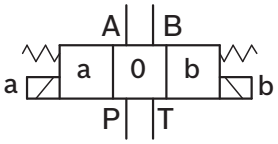

08_ 3 _ _

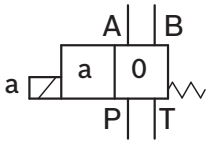

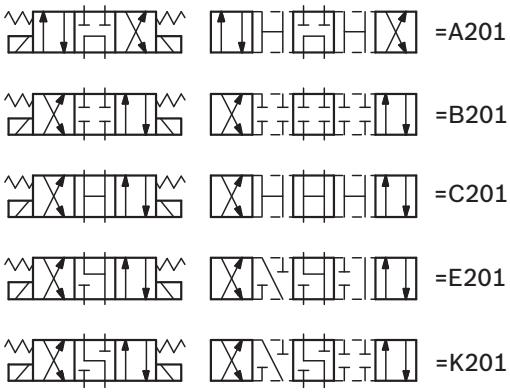

2

Functional description

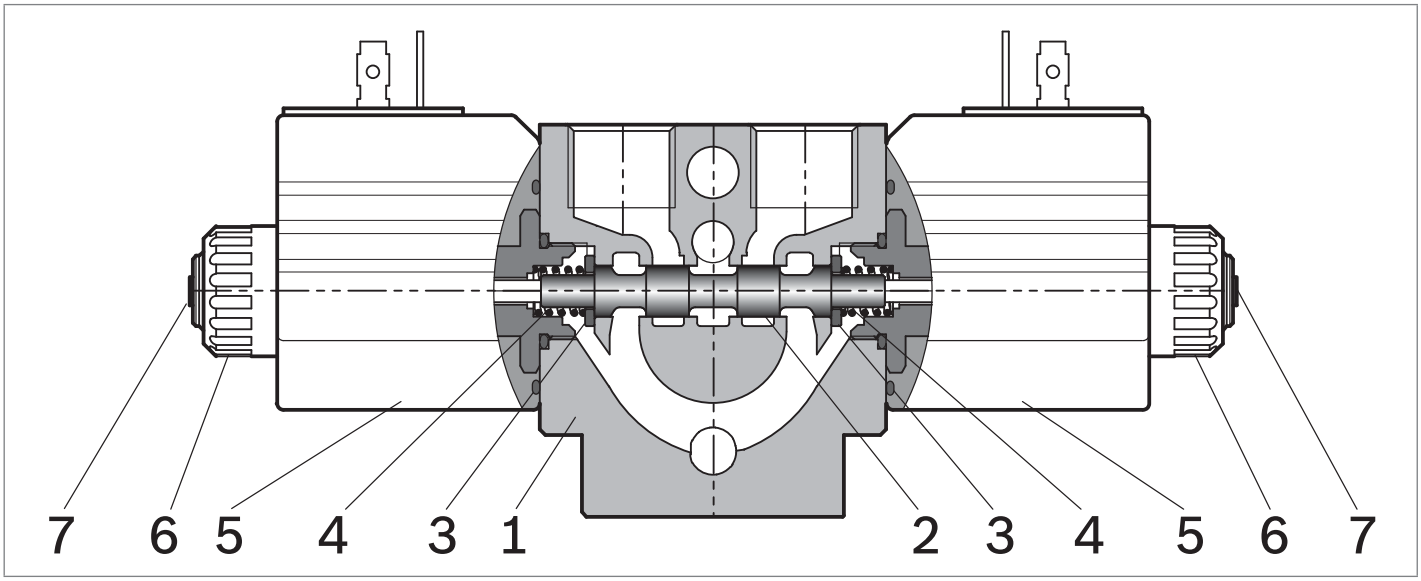

The sandwich plate design directional valve elements B8_08... are very compact direct operated solenoid valves which control the start, the stop and the direction of the oil flow. These elements basically consist of a stackable housing (**1**) with a control spool (**2**), one or two solenoids (**5**), and one or two return springs (**4**). When energized, the force of the solenoid (**5**) pushes the control spool (**2**) from its neutral-central position “0” to the required end position “a” or “b”, and the required flow from P to A (with B to T), or P to B (with A to T) is achieved. Once the solenoid is de-energized, the return spring (**4**) pushes the spool thrust washer (**3**) back against the housing and the spool returns in its neutral-central position.
Each coil is fastened to the solenoid tube by a ring nut (**6**). A pin (**7**) allows to push the spool (**2**) in emergency conditions, when the solenoid cannot be energized, like in case of voltage shortage.

Technical data

General		
Valve element with 2 solenoids	kg (lbs)	1.34 (2.95)
Valve element with 1 solenoid	kg (lbs)	1.06 (2.34)
Ambient Temperature	°C (°F)	–20....+50 (-4....+122) (NBR seals)
Hydraulic		
Maximum pressure at P, A and B ports	bar (psi)	310 (4500)
Maximum pressure at T	bar (psi)	250 (3625)
Maximum inlet flow	l/min (gpm)	25 (6.6)
Maximum inlet flow with spool A201	l/min (gpm)	20 (5.3)
Hydraulic fluid General properties: it must have physical lubricating and chemical properties suitable for use in hydraulic systems such as, for example:		Mineral oil based hydraulic fluids HL (DIN 51524 part 1). Mineral oil based hydraulic fluids HLP (DIN 51524 part 2). For use of environmentally acceptable fluids (vegetable or polyglycol base) please consult us.
Fluid Temperature	°C (°F)	–20....+80 (-4....+176) (NBR seals)
Permissible degree of fluid contamination		ISO 4572: $\beta_x \geq 75$ X=12...15 ISO 4406: class 20/18/15 NAS 1638: class 9
Viscosity range	mm^2/s	5....420

Electrical										
Voltage type		DC (AC only with RAC connection)								
Voltage tolerance (nominal voltage)	%	-10 .... +10								
Duty		Continuous, with ambient temperature ≤ 50°C (122°F)								
Coil wire temperature not to be exceeded	°C (°F)	150 (302)								
Insulation class		H								
Compliance with		Low Voltage Directive LVD 73/23/EC (2006/95/EC), 2004/108/EC								
Coil weight with connection EN 175301-803	kg (lbs)	0.215 (0.44)								
Voltage	V	12	13	24	27	48	110	24 +RAC (21,5)	110 +RAC (98)	230 +RAC (207)
Voltage type		DC	DC	DC	DC	DC	DC	DC	DC	DC
Power consumption	W	26	26	26	26	26	26	29	29	29
Current (nominal at 20 °C (68 °F))	A	2.15	2.0	1.10	1.0	0.54	0.27	1.20	0.29	0.14
Resistance (nominal at 20 °C (68 °F))	Ω	5.5	6.5	22	28	89	413	18	338	1430

Note
For applications with different specifications consult us

Code	Voltage [V]	Connector type	Coil description	Marking	Coil Mat no.
=OB 01	12 DC	EN 175301-803 (Ex. DIN 43650)	C3601 12DC	12 DC	R933000044
=OB 03	12 DC	AMP JUNIOR	C3603 12DC	12 DC	R933000047
=OB 04	12 DC	AMP JUNIOR Horizontal	C3604 12DC	12 DC	R933002913
=OB 07	12 DC	DEUTSCH DT 04-2P	C3607 12DC	12 DC	R933000048
=OB 31	12 DC	Cable 350 mm long	C3631 12DC	12 DC	R933000045
=AD 01	13 DC	EN 175301-803 (Ex. DIN 43650)	C3601 13DC	13 DC	R933000051
=AD 07	13 DC	DEUTSCH DT 04-2P	C3607 13DC	13 DC	R933000049
=OC 01	24 DC	EN 175301-803 (Ex. DIN 43650)	C3601 24DC	24 DC	R933000053
=OC 03	24 DC	AMP JUNIOR	C3603 24DC	24 DC	R933000057
=OC 04	24 DC	AMP JUNIOR Horizontal	C3604 24DC	24 DC	R933002914
=OC 07	24 DC	DEUTSCH DT 04-2P	C3607 24DC	24 DC	R933000058
=OC 31	24 DC	Cable 350 mm long	C3637 24DC	24 DC	R933000055
=AC 01	27 DC	EN 175301-803 (Ex. DIN 43650)	C3601 27DC	27 DC	R933000056
=AC 07	27 DC	DEUTSCH DT 04-2P	C3607 27DC	27 DC	R933000050
=OD 01	48 DC	EN 175301-803 (Ex. DIN 43650)	C3601 48DC	48 DC	R933000059
=OD 04	48 DC	AMP JUNIOR Horizontal	C3604 48DC	48 DC	R933002915
=OE 01	110 DC	EN 175301-803 (Ex. DIN 43650)	C3601 110DC	110 DC	R933000061
=OV 01	24 RAC	EN 175301-803 (Ex. DIN 43650)	C3601 21.5DC	21.5 DC	R933000054
=OW 01	110 RAC	EN 175301-803 (Ex. DIN 43650)	C3601 98DC	98 DC	R933000060
=OZ 01	230 RAC	EN 175301-803 (Ex. DIN 43650)	C3601 207DC	207 DC	R933000062

Characteristic curves

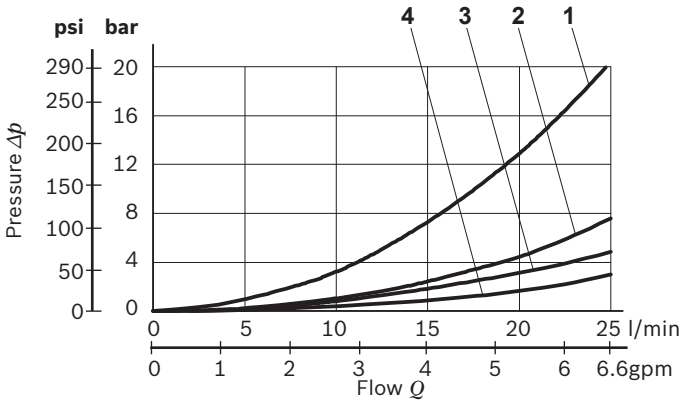

Spool Variant	Curve no.				
	P>T	P>A	P>B	A>T	B>T
B201		3	3	2	2
E201		3	3	4	4
A201	2	1	1	1	1
C201	4	4	4	4	4
K201		3	3	4	3
X301		2	3	3	2
Y301		2	3	3	2

Measured with hydraulic fluid ISO-VG32 at 45° ±5 °C (113° ±9 °F); ambient temperature 20 °C (68 °F).

Performance limits

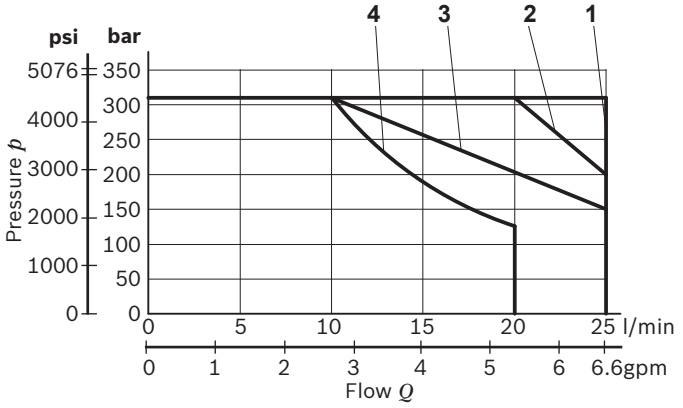

Spool Variant	Curve no.
B201	1
E201	1
A201	4
C201	1
K201	3
X301	1
Y301	2

The performance curves are measured with flow going across and coming back, like P>A and B>T, with symmetrical flow areas.
In case of special circuit connections, the performance limits can change.

Minimum flow for efficiency of LS control

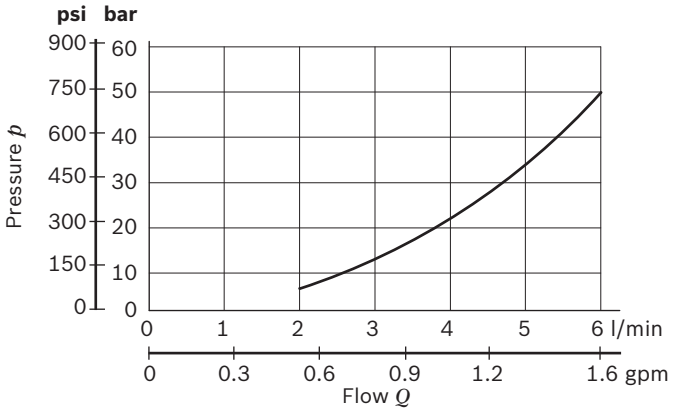

Lowest pressure setting curve for secondary valves

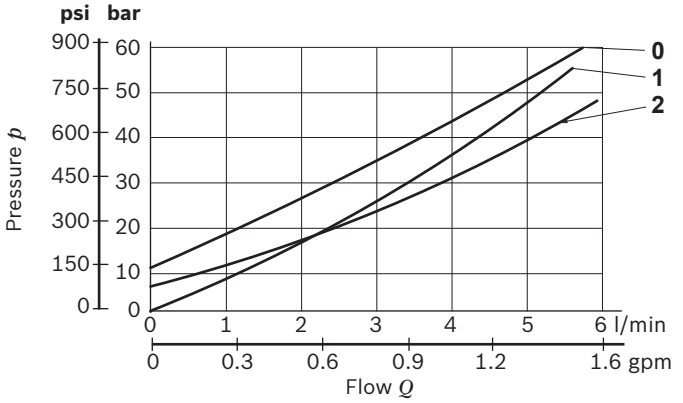

Secondary valve setting	Curve no.
50-210 bar (700-2950 psi)	0
100-310 bar (1400-4500 psi)	1
25-50 bar (350-700 psi)	2

External dimensions and fittings

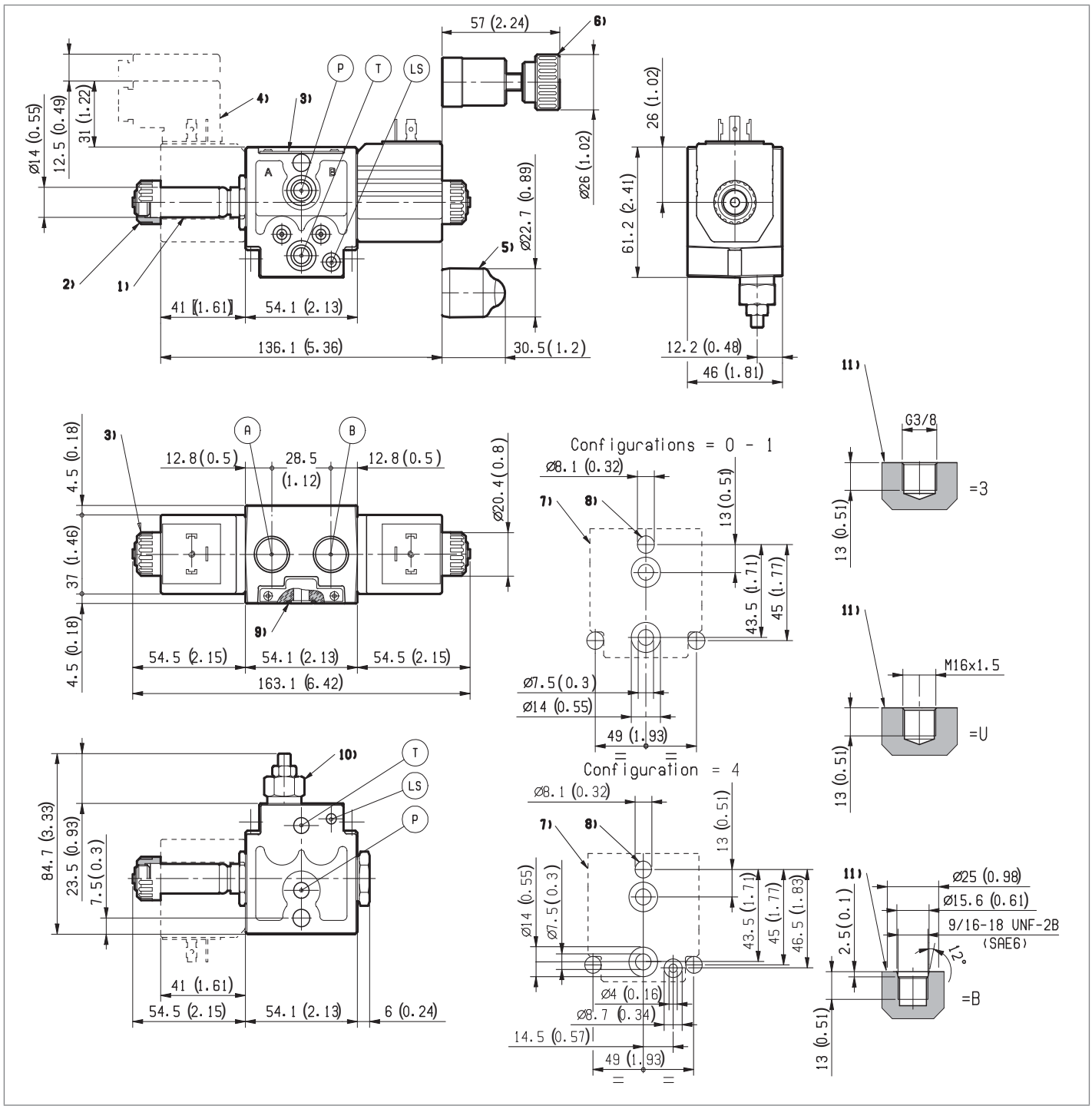

1 Solenoid tube Ø 14 mm (0.55 inch).
2 Ring nut for coil locking (OD 20.5 mm); torque 3-4Nm (2.2-3 ft-lb).
3 Identification label.
4 Clearance needed for connector removal.
5 Optional push-button manual override, EP type, for spool opening: it is pressure stuck to the ring nut for coil locking. Mat no. R933000042.
6 Optional screw type manual override, EF type, for spool opening: it is screwed (torque 6-7 (4.4-5.2 ft-lb)) to the tube as replacement of the coil ring nut. Mat no. R933006377.
7 Flange specifications for coupling to ED intermediate elements.
8 For tie rod and tightening torque information see data sheet RE 18301-90.
9 O-Rings for P and T ports.
10 Space needed for secondary valve.
11 A and B ports.

Electric connection

00

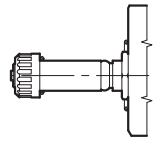

01

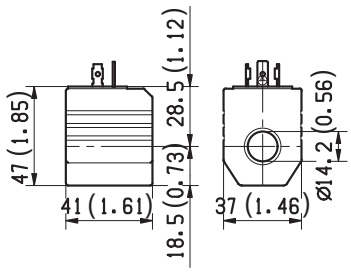

03 Protection class: IP 65 with female connector properly fitted (see drawing).

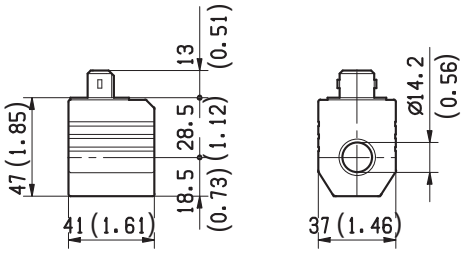

04 Protection class: IP 65 with female connector properly fitted (see drawing).

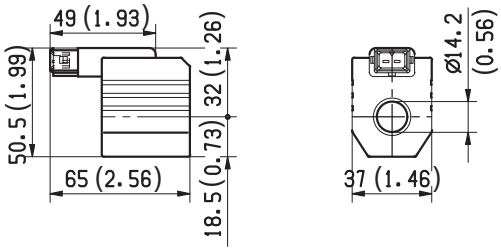

31

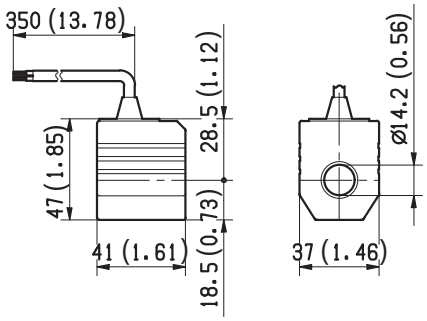

07 Protection class: IP 69 K with female connector properly fitted (see drawing).

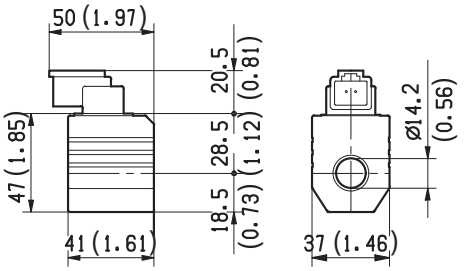

4/3 Directional valve elements with or without secondary relief valves, with or without LS connections, and with PO check valves

B8_48... (EDBZ-VR)

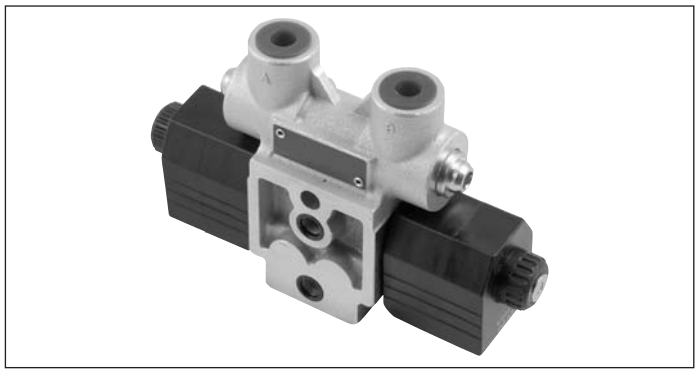

Size 4
Series 00
Maximum operating pressure 250 bar (3625 psi)
Maximum flow 20 l/min (5.3 gpm)
Port connections G 3/8 SAE6 - M16x1.5

General specifications

Valve elements with 4 ways and 3 positions.
Control spools directly operated by solenoids with removable coils.
In the de-energized condition, the control spool is held in the central position by return springs.
Wet pin tubes for DC coils, with push rod for mechanical override; burnish surface treatment.
Single or Dual cross piloted check valves on A and B ports.
PO checks valves with 4:1 pilot ratio.
Coils can be rotated 360° around the tube.
Manual override (push-button or screw type) available as option.

Contents

Ordering details	2
Symbols	2
Functional description	3
Technical data	4
Characteristic curves	6
External dimensions and fittings	7
Electric connection	8

RF 16300/53/02 2016, Bosch Rexroth AG

Ordering details

01	02	03	04	05	06	07	08	09	10	11
B	**8**		**48**							

Family

01	Directional Valve elements EDB	**B**

Type

02	Size 4	**8**

Configuration

03	Standard	**0**
	With secondary valve on A1	**1**
	With channels for Load Sensing	**4**

Coil type

04	C36	**08**

Spool variants[1)]

05	4/3 operated on both sides a and b	**_ 2 _ _**

Voltage supply		**31**	**07**	**04**	**03**	**01**	**00**	
06	Without coil	–	–	–	–	–	●	**00**
	12V DC	●	●	●	●	●	–	**OB**
	13V DC	–	–	–	–	●	–	**AD**
	24V DC	●	●	●	●	●	–	**OC**
	27V DC	–	–	–	–	●	–	**AC**
	48V DC	–	–	●	–	●	–	**OD**
	110V DC	–	–	–	–	●	–	**OE**
	24V AC (21.5 DC)	–	–	–	–	●	–	**OV**
	110V AC (98 DC)	–	–	–	–	●	–	**OW**
	230V AC (207 DC)	–	–	–	–	●	–	**OZ**

Electric connections

07	Without coils	**00**
	With coils, without mating connector DIN EN 175301-803	**01** [2)]
	With coils, with bi-directional diode, without mating connector vertical Amp-Junior	**03**
	With coils, with bi-directional diode, without mating connector horizontal Amp-Junior	**04**
	With coils, with bi-directional diode, without mating connector DT04-2P	**07**
	With coils and bipolar sheathed lead 350mm (13,8 in) long	**31**

Ports

08	G 3/8 DIN 3852	**3**
	M 16x1,5 DIN 3852	**U**
	9/16-18 UNF 2-B (SAE6)	**B**

Secondary valves setting

09	50-210 bar (725-3045 psi)	**0**
	100-310 bar (1450-4500 psi)	**1**
	25-50 bar (362-725 psi)	**2**
	Without secondary valve	**3**

PO check valve position

10	Check valve on port A	**1**
	Check valve on both ports A and Bv	**3**

Options

11	No options	**No code**
	Standard	**0**
	Push-button type manual override	**P**
	Screw type manual override	**F**

● = Available – = Not available

Symbols

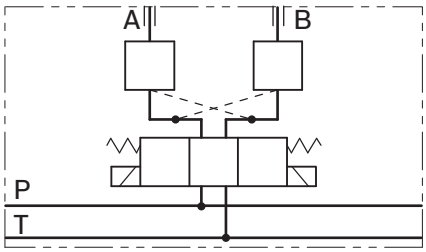

= 0

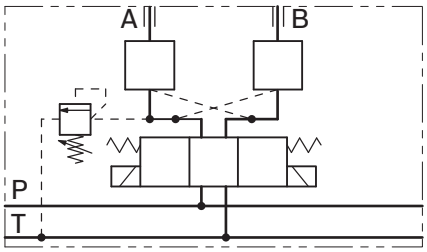

= 1

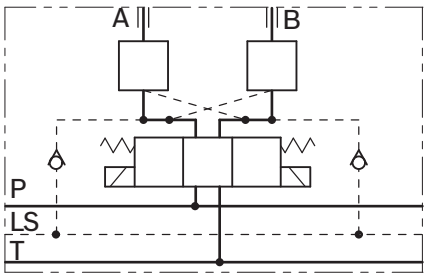

= 4

Spool variants

48_ 2 _____3

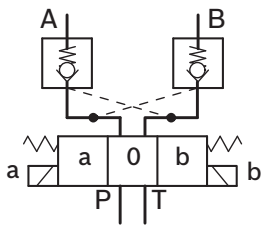

48_ 2 _____1

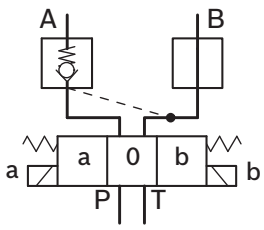

=B201

=E201

1) The required hydraulic symbol and spool variant can be chosen by consulting this page.
2) For connectors ordering code see data sheet RE 18325-90.
The secondary valves have a maximum flow capacity of 6 l/min. (1.6 gpm).

Functional description

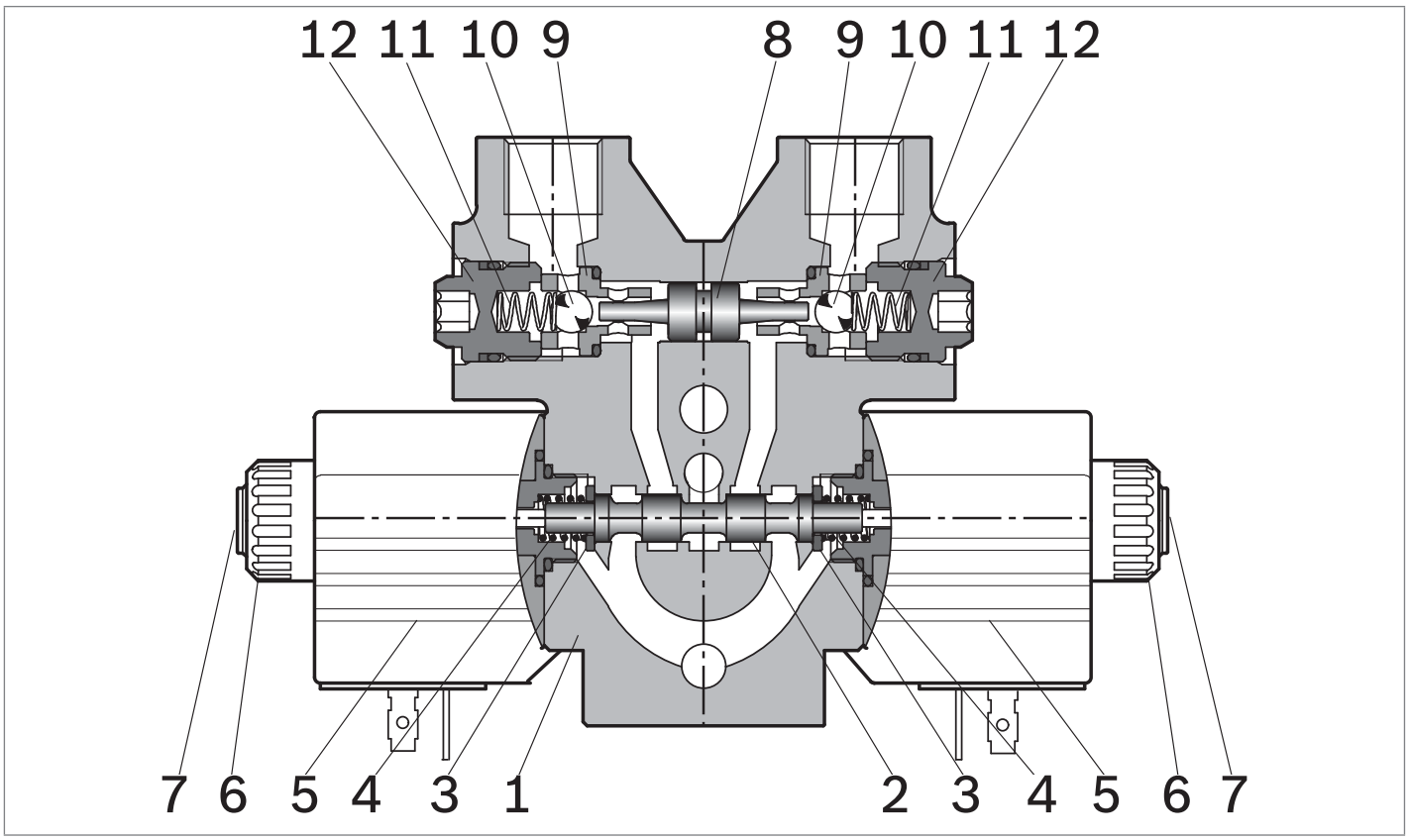

The sandwich plate design directional valve elements B8_48... are very compact direct operated solenoid valves which control the start, the stop and the direction of the oil flow. These elements basically consist of a stackable housing (**1**) with a control spool (**2**), two solenoids (**5**), and two return springs (**4**). The upper part of the housing is extended in order to provide space for the cavities where two PO check valves are fitted. They consist of two calibrated balls (**10**), with return springs (**11**), which allow upstream flow but lock on the respective seats (**9**) and prevent the return flow. The return flow is possible when they are opened by the pilot piston (**8**), if enough pilot pressure is present in the opposite line.

When energized, the force of the solenoid (**5**) pushes the control spool (**2**) from its neutral-central position “0” to the required end position “a” or “b”, and the required flow from P to A (with B to T), or P to B (with A to T) is achieved. Once the solenoid is de-energized, the return spring (**4**) pushes the spool thrust washer (**3**) back against the housing and the spool (**2**) returns in its neutral-central position.
Each coil is fastened to the solenoid tube by a ring nut (**6**). A pin (**7**) allows to push the spool (**2**) in emergency conditions, when the solenoid cannot be energized, like in case of voltage shortage.

Technical data

General									
Valve element with 2 solenoids	kg (lbs)	1.75 (3.86)							
Ambient Temperature	°C (°F)	–20....+50 (-4....+122) (NBR seals)							
Hydraulic									
Maximum pressure at P, A and B ports	bar (psi)	250 (3625)							
Maximum pressure at T	bar (psi)	250 (3625)							
Maximum inlet flow	l/min (gpm)	20 (5.3)							
Hydraulic fluid General properties: it must have physical lubricating and chemical properties suitable for use in hydraulic systems such as, for example:		Mineral oil based hydraulic fluids HL (DIN 51524 part 1). Mineral oil based hydraulic fluids HLP (DIN 51524 part 2). For use of environmentally acceptable fluids (vegetable or polyglycol base) please consult us.							
Fluid Temperature	°C (°F)	–20....+80 (-4....+176) (NBR seals)							
Permissible degree of fluid contamination		ISO 4572: $\beta_x \geq 75$ X=12...15 ISO 4406: class 20/18/15 NAS 1638: class 9							
Viscosity range	mm^2/s	5....420							
Electrical									
Voltage type		DC (AC only with RAC connection)							
Voltage tolerance (nominal voltage)	%	-10 .... +10							
Duty		Continuous, with ambient temperature ≤ 50°C (122°F)							
Coil wire temperature not to be exceeded	°C (°F)	150 (302)							
Insulation class		H							
Compliance with		Low Voltage Directive LVD 73/23/EC (2006/95/EC), 2004/108/EC							
Coil weight with connection EN 175301-803	kg (lbs)	0.215 (0.44)							
Voltage	V	12	13	24	27	48	110	24 +RAC (21,5)	110 +RAC (98)	230 +RAC (207)
Voltage type		DC	DC	DC	DC	DC	DC	DC	DC	DC
Power consumption	W	26	26	26	26	26	26	29	29	29
Current (nominal at 20 °C (68 °F))	A	2.15	2.0	1.10	1.0	0.54	0.27	1.20	0.29	0.14
Resistance (nominal at 20 °C (68 °F))	Ω	5.5	6.5	22	28	89	413	18	338	1430

Note
For applications with different specifications consult us

Code	Voltage [V]	Connector type	Coil description	Marking	Coil Mat no.
=OB 01	12 DC	EN 175301-803 (Ex. DIN 43650)	C3601 12DC	12 DC	R933000044
=OB 03	12 DC	AMP JUNIOR	C3603 12DC	12 DC	R933000047
=OB 04	12 DC	AMP JUNIOR Horizontal	C3604 12DC	12 DC	R933002913
=OB 07	12 DC	DEUTSCH DT 04-2P	C3607 12DC	12 DC	R933000048
=OB 31	12 DC	Cable 350 mm long	C3631 12DC	12 DC	R933000045
=AD 01	13 DC	EN 175301-803 (Ex. DIN 43650)	C3601 13DC	13 DC	R933000051
=AD 07	13 DC	DEUTSCH DT 04-2P	C3607 13DC	13 DC	R933000049
=OC 01	24 DC	EN 175301-803 (Ex. DIN 43650)	C3601 24DC	24 DC	R933000053
=OC 03	24 DC	AMP JUNIOR	C3603 24DC	24 DC	R933000057
=OC 04	24 DC	AMP JUNIOR Horizontal	C3604 24DC	24 DC	R933002914
=OC 07	24 DC	DEUTSCH DT 04-2P	C3607 24DC	24 DC	R933000058
=OC 31	24 DC	Cable 350 mm long	C3637 24DC	24 DC	R933000055
=AC 01	27 DC	EN 175301-803 (Ex. DIN 43650)	C3601 27DC	27 DC	R933000056
=AC 07	27 DC	DEUTSCH DT 04-2P	C3607 27DC	27 DC	R933000050
=OD 01	48 DC	EN 175301-803 (Ex. DIN 43650)	C3601 48DC	48 DC	R933000059
=OD 04	48 DC	AMP JUNIOR Horizontal	C3604 48DC	48 DC	R933002915
=OE 01	110 DC	EN 175301-803 (Ex. DIN 43650)	C3601 110DC	110 DC	R933000061
=OV 01	24 RAC	EN 175301-803 (Ex. DIN 43650)	C3601 21.5DC	21.5 DC	R933000054
=OW 01	110 RAC	EN 175301-803 (Ex. DIN 43650)	C3601 98DC	98 DC	R933000060
=OZ 01	230 RAC	EN 175301-803 (Ex. DIN 43650)	C3601 207DC	207 DC	R933000062

Characteristic curves

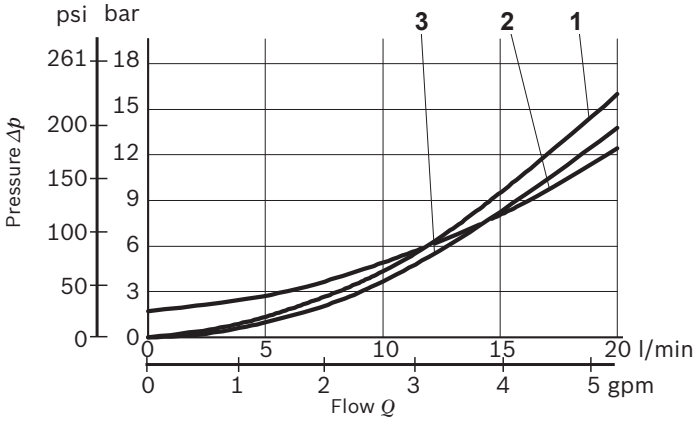

Spool Variant	Curve no.			
	P>A	P>B	A>T	B>T
B201	2	2	1	1
E201	2	2	3	3

Measured with hydraulic fluid ISO-VG32 at 45° ±5 °C (113° ±9 °F); ambient temperature 20 °C (68 °F).

Performance limits

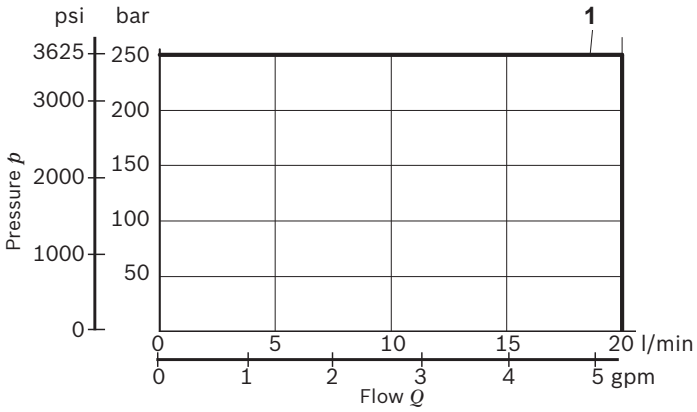

Spool Variant	Curve no.
B201	1
E201	1

The performance curves are measured with flow going across and coming back, like P>A and B>T, with symmetrical flow areas.
In case of special circuit connections, the performance limits can change.

Minimum flow for efficiency of LS control

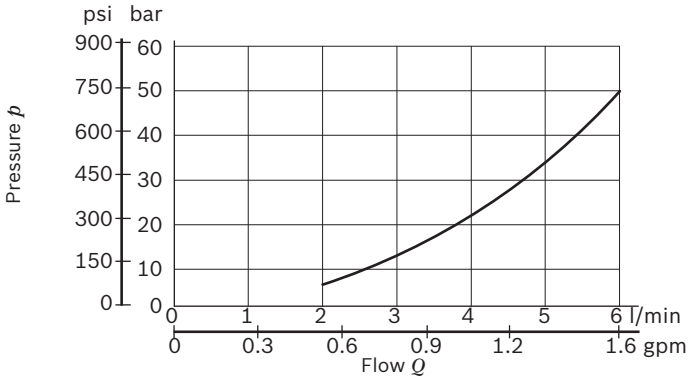

Lowest pressure setting curve for secondary valves

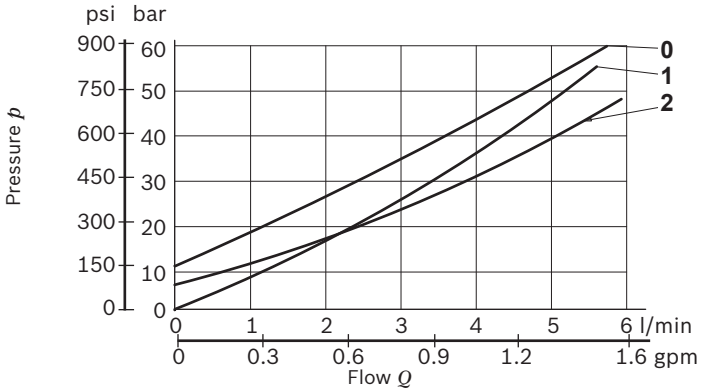

Secondary valve setting	Curve no.
50-210 bar (700-2950 psi)	0
100-310 bar (1400-4500 psi)	1
25-50 bar (350-700 psi)	2

External dimensions and fittings

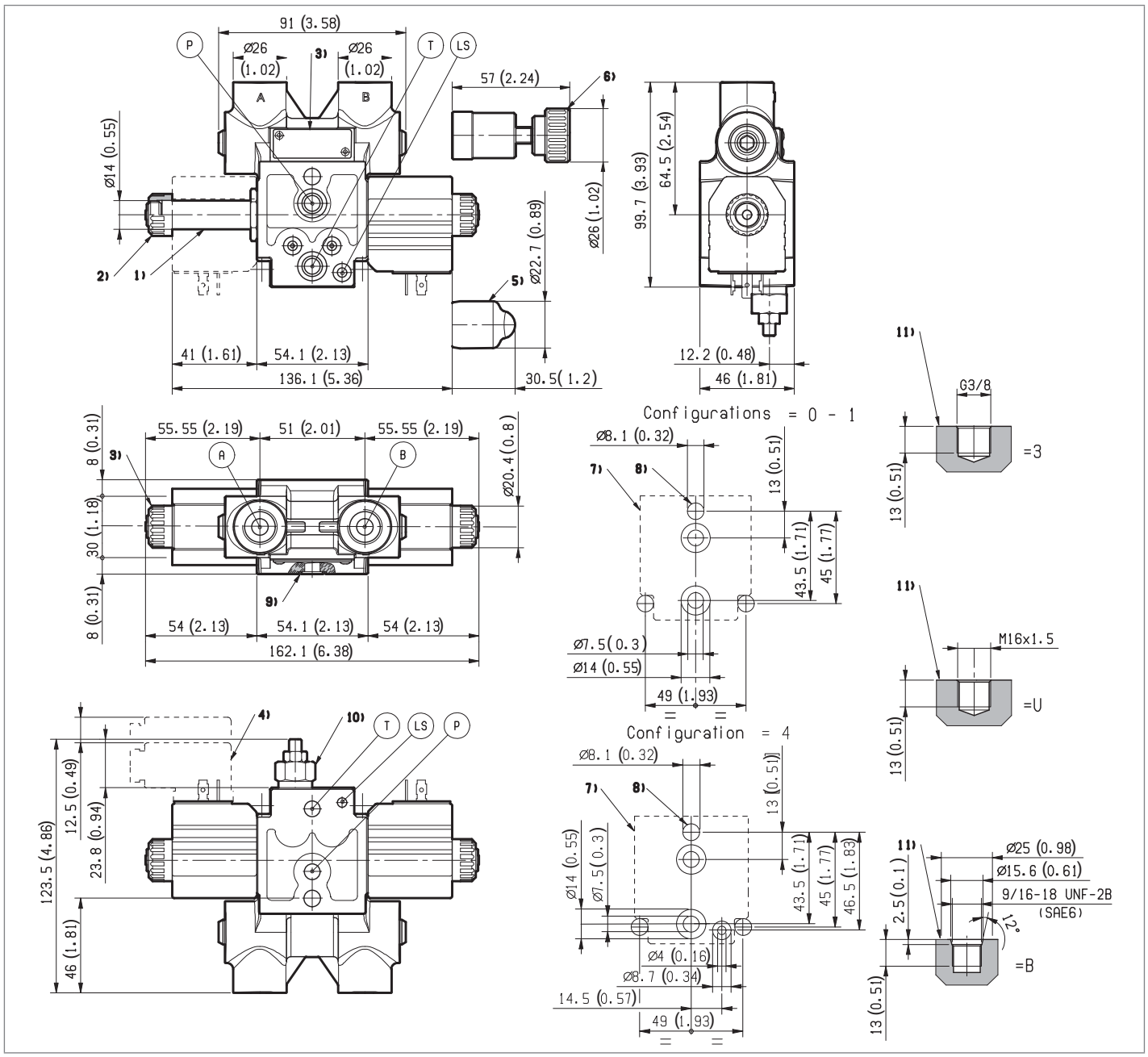

1 Solenoid tube Ø 14 mm (0.55 inch).
2 Ring nut for coil locking (OD 20.5 mm); torque 3-4Nm (2.2-3 ft-lb).
3 Identification label.
4 Clearance needed for connector removal.
5 Optional push-button manual override, EP type, for spool opening: it is pressure stuck to the ring nut for coil locking. Mat no. R933000042.
6 Optional screw type manual override, EF type, for spool opening: it is screwed (torque 6-7 (4.4-5.2 ft-lb)) to the tube as replacement of the coil ring nut. Mat no. R933000021.
7 Flange specifications for coupling to ED intermediate elements.
8 For tie rod and tightening torque information see data sheet RE 18301-90.
9 O-Rings for P and T ports.
10 Space needed for secondary valve, for configuration 1. Hex. 17, torque 9-10 Nm (6.6-7.4 lb-ft).
11 A and B ports.

Electric connection

00

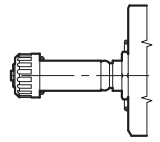

01

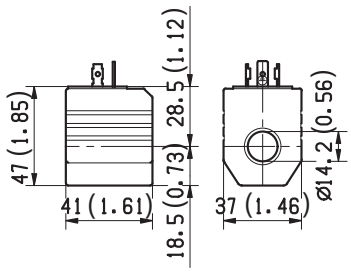

03 Protection class: IP 65 with female connector properly fitted (see drawing).

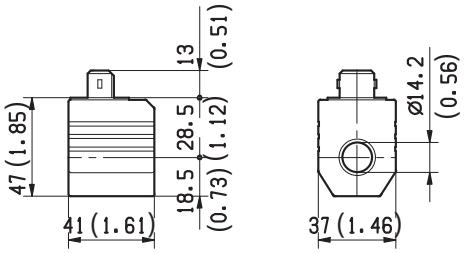

04 Protection class: IP 65 with female connector properly fitted (see drawing).

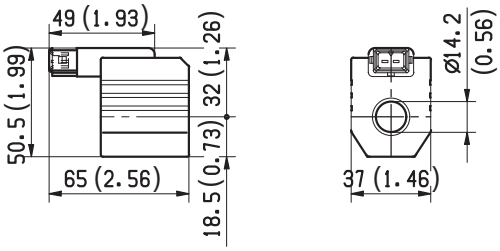

31

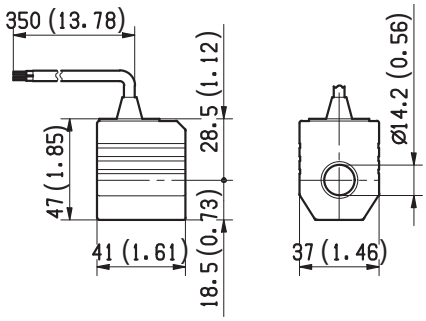

07 Protection class: IP 69 K with female connector properly fitted (see drawing).

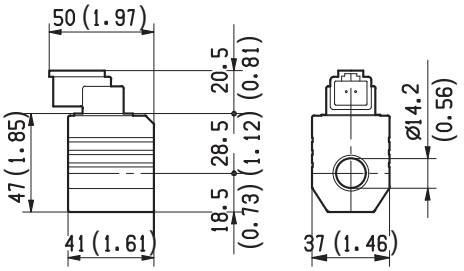

4/3 Directional valve elements with or without secondary relief valves, with or without LS connections, and with 2/2 solenoid cartridge valve

B8_58... (EDBZ-VEI)

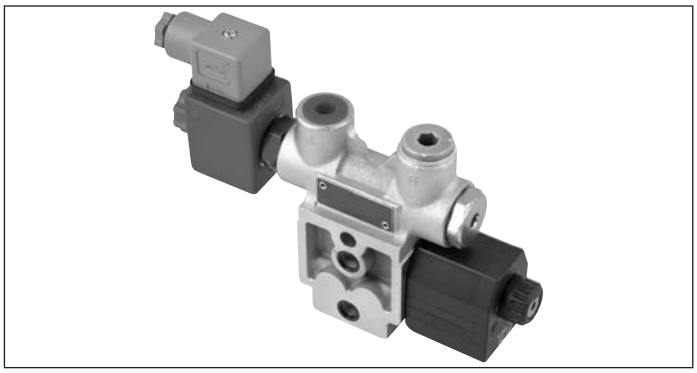

Size 4
Series 00
Maximum operating pressure 310 bar (4500 psi)
Maximum flow 25 l/min (6.6 gpm)
Port connections G 3/8 SAE6 - M16x1.5

General specifications

Valve elements with 4 ways and 2 positions.
Control spools directly operated by solenoids with removable coils.
In the de-energized condition, the control spool is held in the central position by return spring.
Wet pin tubes for DC coils, with push rod for mechanical override; burnish surface treatment.
Manual override (push-button or screw type) available as option.
Additional solenoid cartridge 2/2, NO or NC, single locking or dual locking on port A.

Contents

Ordering details	2
Symbols	2
Functional description	3
Technical data	4
Characteristic curves	6
External dimensions and fittings	7
Electric connection	8

RF 18300/54/02.2016 Bosch Rexroth AG

Ordering details

01	02	03	04	05	06	07	08	09	10	11
B	**8**		**58**	**E401**						

Family

01	Directional Valve elements EDB	**B**

Type

02	Size 4	**8**

Configuration

03	Standard	**0**
	With secondary valve on A	**1**
	With channels for Load Sensing	**4**

Coil type

04	C36	**08**

Spool variants

05	4/2 operated on side b only	**E401**

Voltage supply

		07	03	01	00	
06	Without coil	–	–	–	●	**00**
	12V DC	●	●	●	–	**OB**
	24V DC	●	●	●	–	**OC**
	24V AC (21.5 DC)	–	–	●	–	**OV**
	110V AC (98 DC)	–	–	●	–	**OW**
	230V AC (207 DC)	–	–	●	–	**OZ**

Electric connections

07	Without coils	**00**
	With coils, without mating connector DIN EN 175301-803	**01** [1]
	With coils, with bi-directional diode, without mating connector vertical Amp-Junior	**03**
	With coils, with bi-directional diode, without mating connector DT04-2P	**07**

Ports

08	G 3/8 DIN 3852	**3**
	M 16x1,5 DIN 3852	**U**
	9/16-18 UNF 2-B (SAE6)	**B**

Secondary valves setting [2]

09	50-210 bar (725-3045 psi)	**0**
	100-310 bar (1450-4500 psi)	**1**
	25-50 bar (362-725 psi)	**2**
	Without secondary valve	**3**

Solenoid screw-in cartridge VEI

10	Without valve	**N**
	Normally closed	**C**
	Normally open	**A**
	Dual locking normally closed	**D**
	Dual locking normally open	**O**

Options

11	No options	**No code**
	Standard	**0**
	Push-button type manual override	**P**
	Screw type manual override	**F**

● = Available – = Not available

1) For connectors ordering code see data sheet RE 18325-90.
2) VEI solenoid cartridge must be ordered separately.
The secondary valves have a maximum flow capacity of 6 l/min. (1.6 gpm).

Symbols

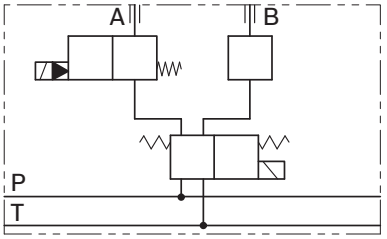

= 0

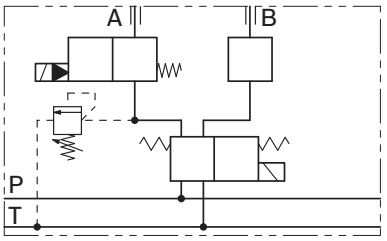

= 1

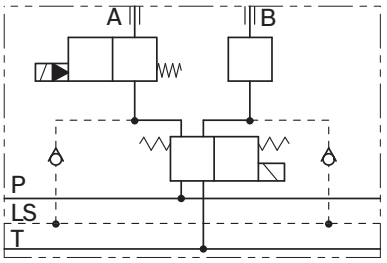

= 4

Spool variants

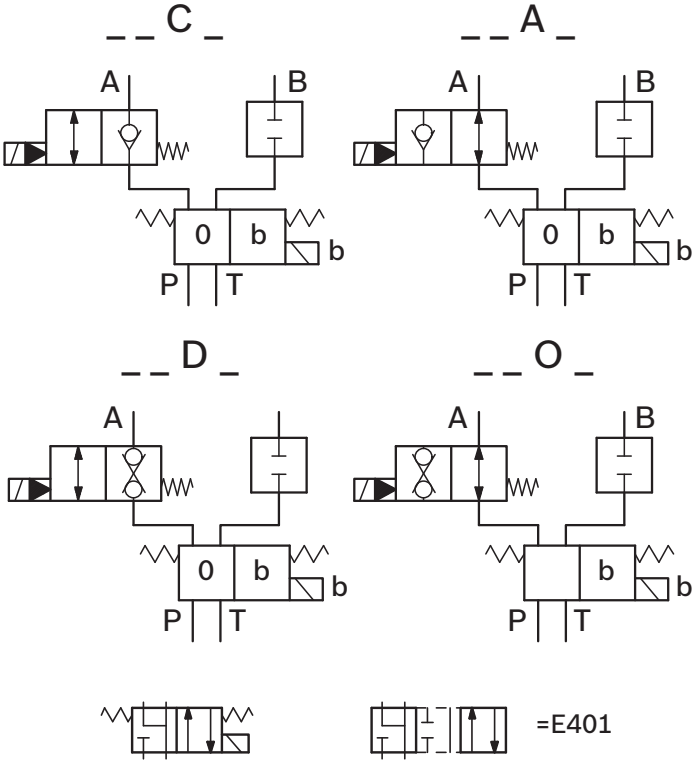

Functional description

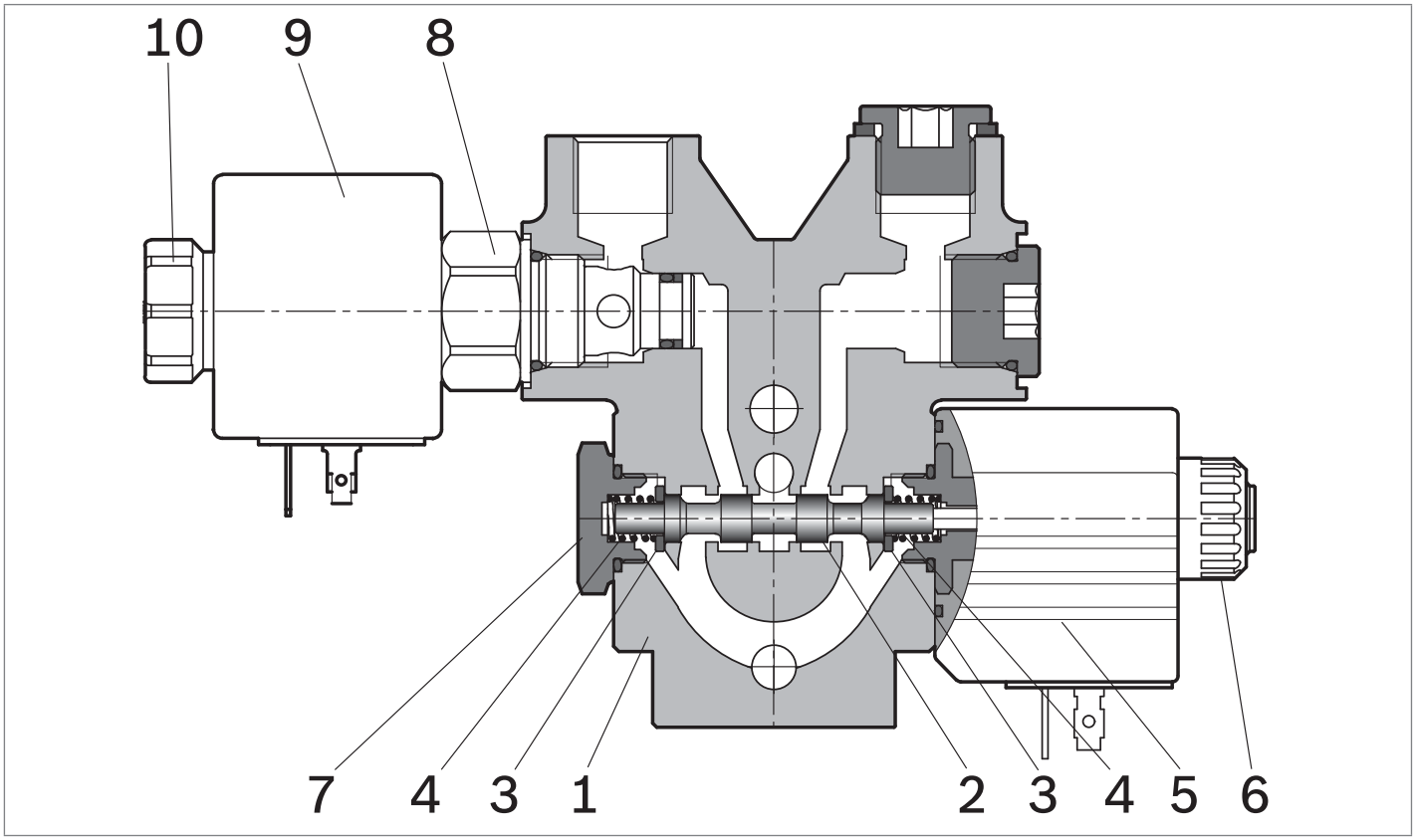

The sandwich plate design directional valve elements B8_58... are very compact direct operated solenoid valves which control the start, the direction and the leak free stop of the oil flow. These elements basically consist of a stackable housing (**1**) with a control spool (**2**), one solenoid (**5**), a spring holder plug (**7**); two return springs (**4**); a solenoid screw-in cartridge VEI (**8**) with its coil (**9**).
When energized, the force of the solenoid (**5**) pushes the control spool (**2**) from its rest position “0” to the end position “b”. If there is a solenoid cartridge VEI (**8**) type C, A, O, the oil flow goes directly to the port A; if there is a solenoid cartridge VEI (**8**) type D (Dual locking), it is necessary to energize the solenoid cartridge as well in order to allow the oil flow to the port A.
Once the solenoid (**5**) is de-energized, the return spring (**4**) pushes the spool thrust washer (**3**) back against the housing and the spool (**2**) returns in its rest position. The leak free holding at port A is provided by energizing (or de-energizing, if the VEI is NC type) the solenoid cartridge. By energizing open the VEI (**8**) (“C“ and “A“ versions), the A port is open to tank and downstream flow is possible.
The coils are fastened to the respective solenoids (**5**) and VEI (**8**) by the ring nuts (**6**) and (**10**).

Technical data

General						
Valve element with solenoid	kg (lbs)	1.8 (3.96)				
Ambient Temperature	°C (°F)	–20....+50 (-4....+122) (NBR seals)				
Hydraulic						
Maximum pressure at P, and A ports	bar (psi)	310 (4500)				
Maximum pressure at T	bar (psi)	250 (3625)				
Maximum inlet flow	l/min (gpm)	25 (6.6)				
Hydraulic fluid General properties: it must have physical lubricating and chemical properties suitable for use in hydraulic systems such as, for example:		Mineral oil based hydraulic fluids HL (DIN 51524 part 1). Mineral oil based hydraulic fluids HLP (DIN 51524 part 2). For use of environmentally acceptable fluids (vegetable or polyglycol base) please consult us.				
Fluid Temperature	°C (°F)	–20....+80 (-4....+176) (NBR seals)				
Permissible degree of fluid contamination		ISO 4572: $\beta_x \geq 75$ X=12...15 ISO 4406: class 20/18/15 NAS 1638: class 9				
Viscosity range	mm^2/s	5....420				
Electrical						
Voltage type		DC (AC only with RAC connection)				
Voltage tolerance (nominal voltage)	%	-10 .... +10				
Duty		Continuous, with ambient temperature ≤ 50°C (122°F)				
Coil wire temperature not to be exceeded	°C (°F)	150 (302)				
Insulation class		H				
Compliance with		Low Voltage Directive LVD 73/23/EC (2006/95/EC), 2004/108/EC				
Coil weight with connection EN 175301-803	kg (lbs)	0.215 (0.44)				
Voltage	V	12	24	24 +RAC (21,5)	110 +RAC (98)	230 +RAC (207)
Voltage type		DC	DC	DC	DC	DC
Power consumption	W	26	26	29	29	29
Current (nominal at 20 °C (68 °F))	A	2.15	1.10	1.20	0.29	0.14
Resistance (nominal at 20 °C (68 °F))	Ω	5.5	22	18	338	1430

Note
For applications with different specifications consult us

Code	Voltage [V]	Connector type	Coil description	Marking	Coil Mat no.
=OB 01	12 DC	EN 175301-803 (Ex. DIN 43650)	C3601 12DC	12 DC	R933000044
=OB 03	12 DC	AMP JUNIOR	C3603 12DC	12 DC	R933000047
=OB 07	12 DC	DEUTSCH DT 04-2P	C3607 12DC	12 DC	R933000048
=OC 01	24 DC	EN 175301-803 (Ex. DIN 43650)	C3601 24DC	24 DC	R933000053
=OC 03	24 DC	AMP JUNIOR	C3603 24DC	24 DC	R933000057
=OC 07	24 DC	DEUTSCH DT 04-2P	C3607 24DC	24 DC	R933000058
=OV 01	24 RAC	EN 175301-803 (Ex. DIN 43650)	C3601 21.5DC	21.5 DC	R933000054
=OW 01	110 RAC	EN 175301-803 (Ex. DIN 43650)	C3601 98DC	98 DC	R933000060
=OZ 01	230 RAC	EN 175301-803 (Ex. DIN 43650)	C3601 207DC	207 DC	R933000062

Characteristic curves

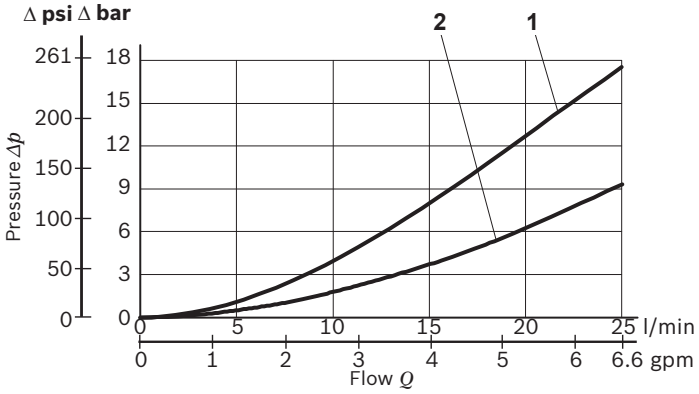

Spool Variant	Curve no.	
	B>T	P>A
X301	1	2

Measured with hydraulic fluid ISO-VG32 at 45° ±5 °C (113° ±9 °F); ambient temperature 20 °C (68 °F).

Performance limits

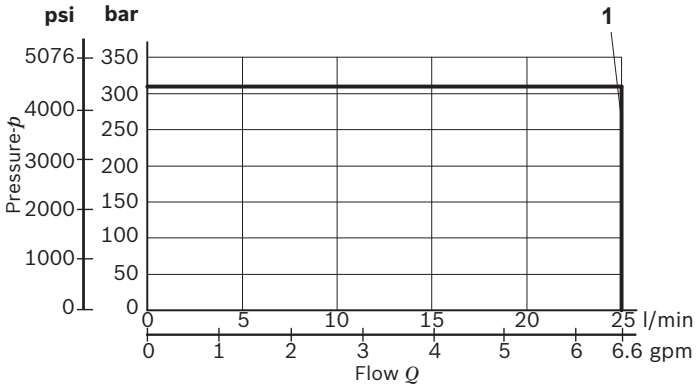

Spool Variant	Curve no.
X401	1

The performance curves are measured with flow going across and coming back, like P>A and B>T, with symmetrical flow areas.
In case of special circuit connections, the performance limits can change.

Minimum flow for efficiency of LS control

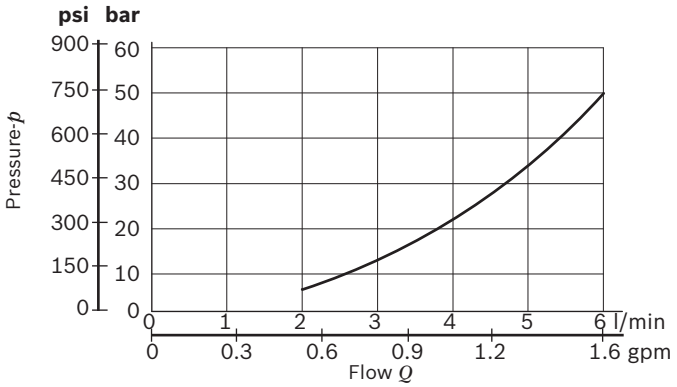

Lowest pressure setting curve for secondary valves

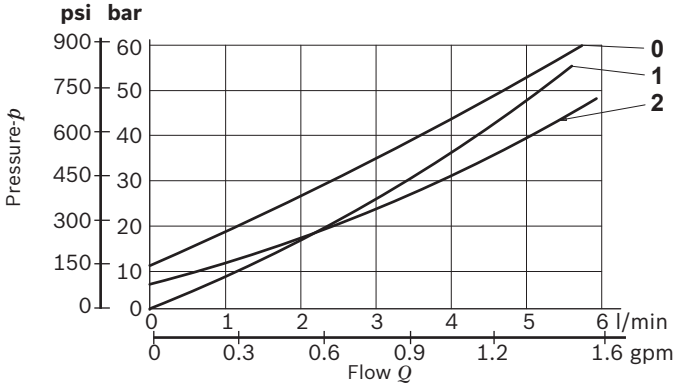

Secondary valve setting	Curve no.
50-210 bar (700-2950 psi)	0
100-310 bar (1400-4500 psi)	1
25-50 bar (350-700 psi)	2

External dimensions and fittings

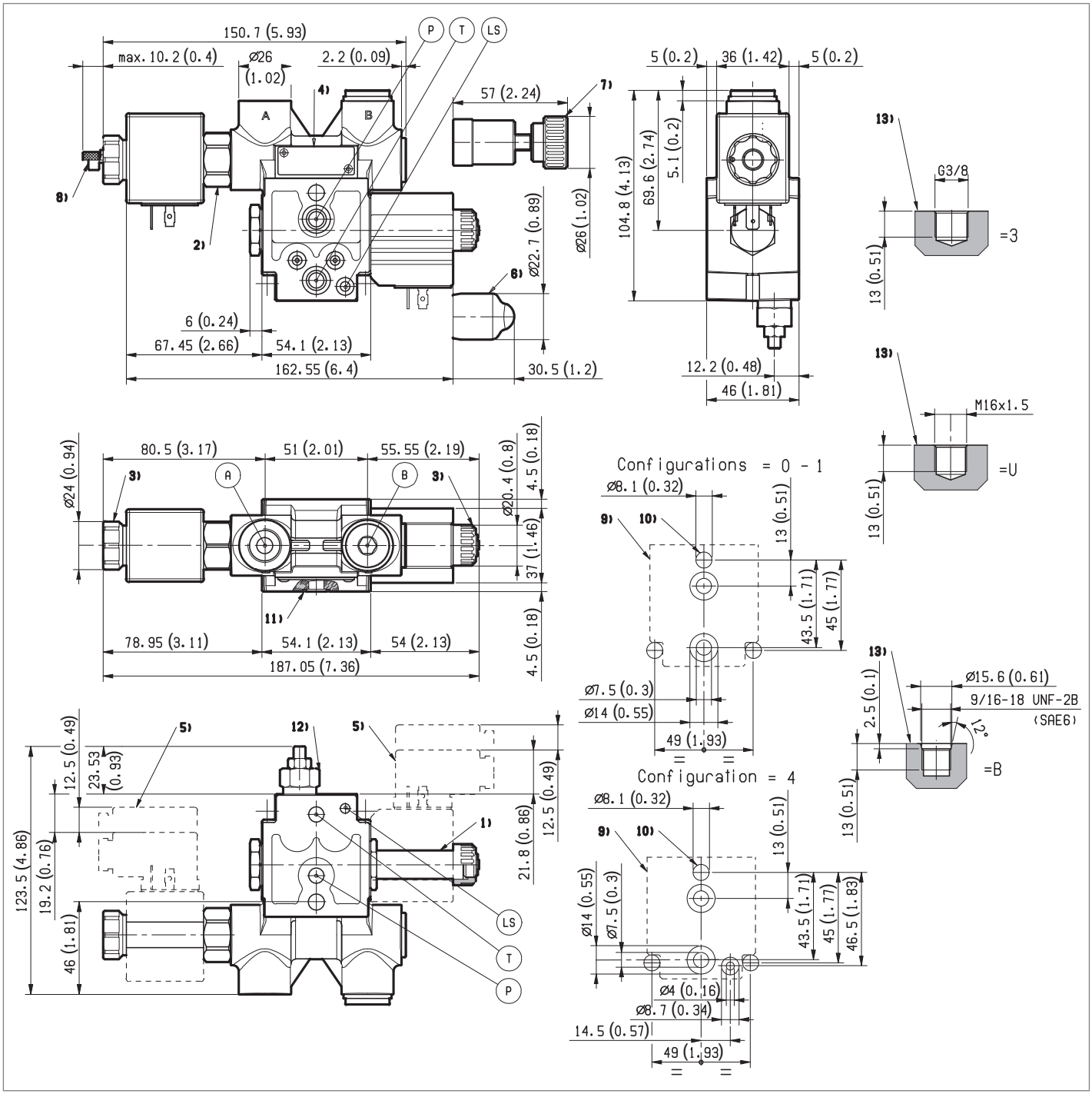

1 Solenoid tube Ø 14 mm (0.55 inch).
2 Screw-in solenoid cartridge VEI hex 24 mm (0.94 inch). Torque 39-51Nm (28.8-37.6 lb-ft).
3 Ring nut for coil locking (OD 20.5 mm); torque 3-4Nm (2.2-3 ft-lb).
4 Identification label.
5 Clearance needed for connector removal.
6 Optional push-button manual override, EP type, for spool opening: it is pressure stuck to the ring nut for coil locking. Mat no. R933000042.
7 Optional screw type manual overide, EF type, for spool opening: it is screwed (torque 6-7 (4.4-5.2 ft-lb)) to the tube as replacement of the coil ring nut. Mat no. R933006377.
8 Optional manual override for VEI cartridge: it can be push/pull or screw type. Please refer to the VEI catalogue for details.
9 Flange specifications for coupling to ED intermediate elements.
10 For tie rod and tightening torque information see data sheet RE 18301-90.
11 O-Rings for P and T ports.
12 Space needed for secondary valve in configuration 1.
13 A and B ports.

Electric connection

00

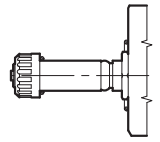

01

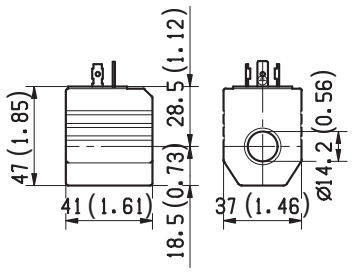

03 Protection class: IP 65 with female connector properly fitted (see drawing).

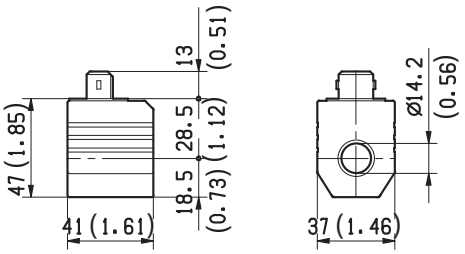

07 Protection class: IP 69 K with female connector properly fitted (see drawing).

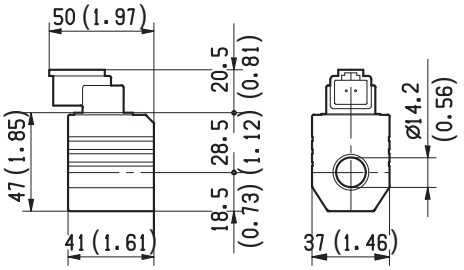

4/3 - 4/2 Directional valve elements with proportional control and with or without LS connections

B8_80... (EDB-P)

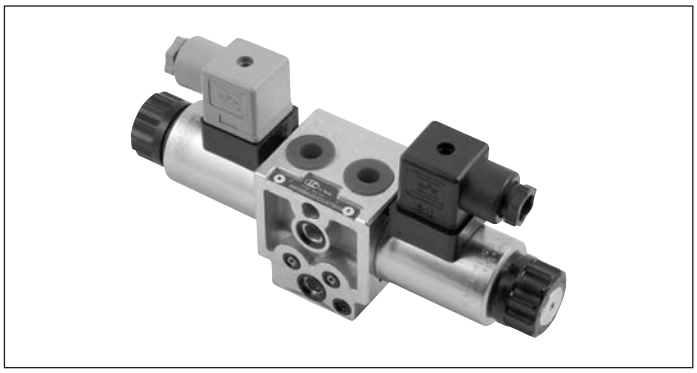

- Size 4
- Series 00
- Maximum operating pressure 310 bar (4500 psi)
- Maximum flow 17 l/min (4.5 gpm)
- Port connections G 3/8 SAE6 - M16x1.5

General specifications

- Valve element with direct proportional control of spool.
- Control spools operated by solenoids with removable coils.
- In the de-energized condition, the control spool is held in the central position by return springs.
- Wet pin proportional tubes for DC coils, with push rod for mechanical override; nickel plated surface.
- Manual override (push-button or screw type) available as option.

Contents

Ordering details	2
Symbols	2
Functional description	3
Technical data	4
Characteristic curves	5
External dimensions and fittings	6
Electric connection	7
Electronic feed regulator	7

RF 16300/55/08 2016, Bosch Rexroth AG

Ordering details

01	02	03	04	05	06	07	08	09	10		11
B	**8**		**80**		**S**					**00**	

Family

01	Directional Valve elements EDB	**B**

Type

02	Size 4 proportional	**8**

Configuration

03	Standard	**0**
	With Load Sensing control	**4**

Coil type

04	P45	**80**

Spool variants

05	4/3 operated both sides a and b; P – T closed in neutral	**B2**
	4/2 operated on side a only; P – T closed in neutral	**B3**
	4/2 operated on side b only; P – T closed in neutral	**B4**
	4/3 operated on both sides a and b; A and B to T in neutral	**E2**
	4/2 operated on side a only; A and B to T in neutral	**E3**
	4/2 operated on side b only; A and B to T in neutral	**E4**

Flow pattern

06	Symmetrical	**S**

Nominal flow [1]

07	4 l/min (1.06gpm)	**3**
	9 l/min (2.38gpm)	**4**
	17 l/min (4.50gpm)	**5**

Voltage supply

08	Without coil	**00**
	12V DC	**OB**
	24V DC	**OC**

Electric connections

09	Without coils	**00**
	With coils, without mating connector DIN EN 175301-803	**01** [2]
	With coils, without mating connector vertical Amp-Junior	**03**

Ports

10	G 3/8 DIN 3852	**3**
	M 16x1,5 DIN 3852	**U**
	9/16-18 UNF 2-B (SAE6)	**B**

Options

11	No options	**No code**
	Standard	**0**
	Screw type manual override	**F**

● = Available – = Not available

1) With Δp (P > T) 10 bar (145 psi), corresponding approx. to Δp P>A,B 5 bar (73 psi).
2) For connectors ordering code see data sheet RE 18325-90.

▼ **Symbols**

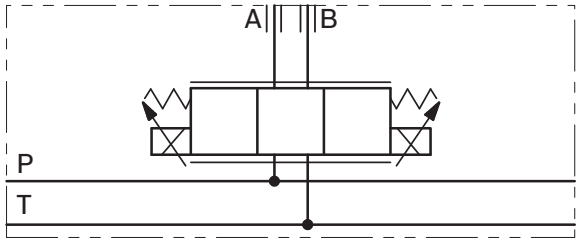

= 0

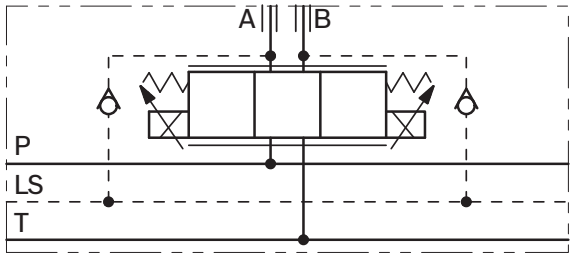

= 4

▼ **Spool variants**

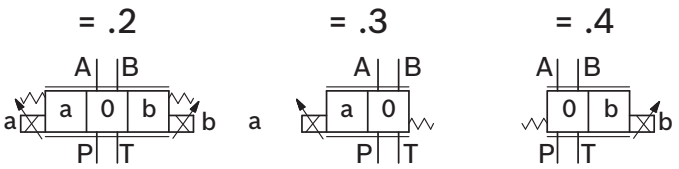

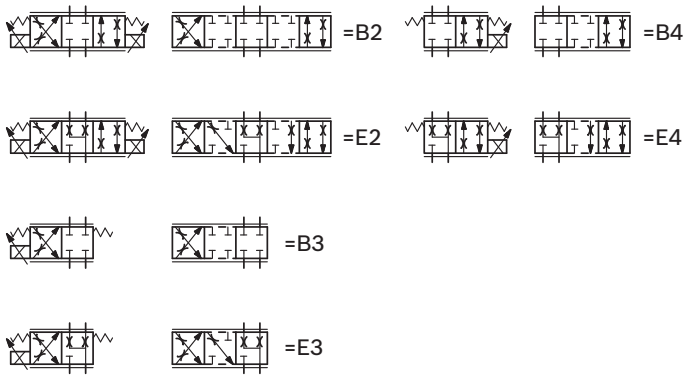

Functional description

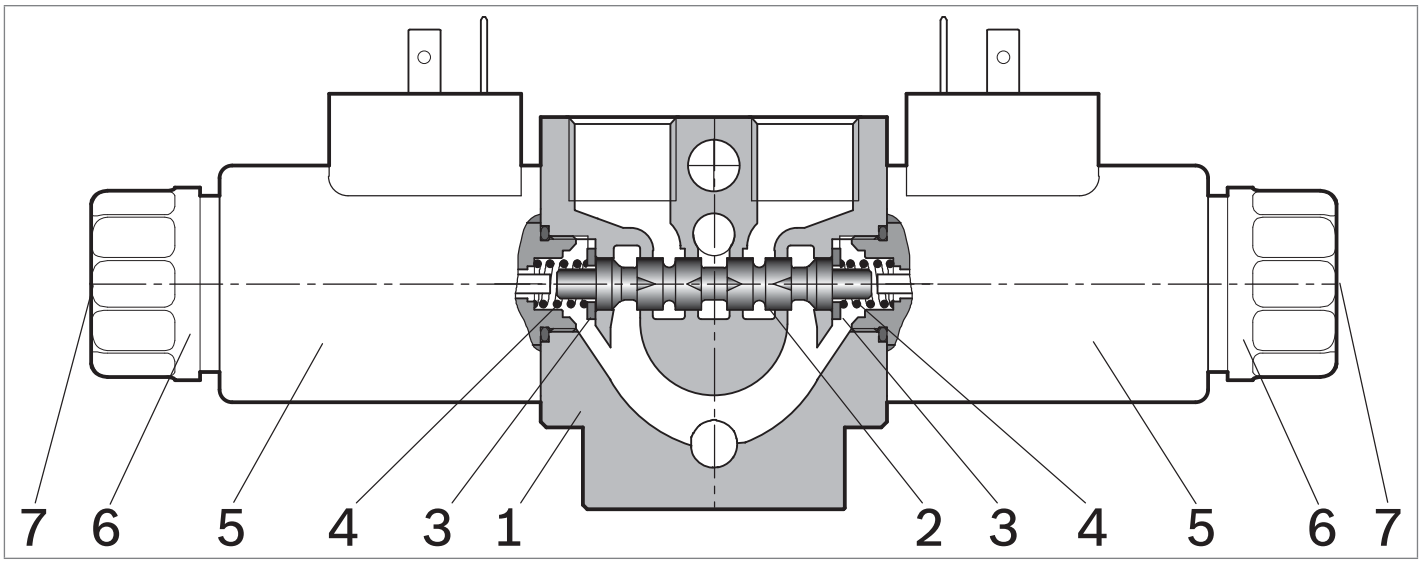

The sandwich plate design directional valve elements B8080... are compact direct operated proportional solenoid valves which control the start, the stop, the direction and the quantity of the oil flow. These elements basically consist of a stackable housing (**1**) with a control spool (**2**), one or two solenoids (**5**), and one or two return springs (**4**).
Energized by an electronic feed regulator, each solenoid (**5**) displaces the control spool (**2**) from its neutral-central position “0” proportionally to the current received, in open loop mode; a regulated oil flow P to A , or P to B, is achieved. Once the solenoid is de-energized, the return spring (**4**) pushes the spool thrust washer (**3**) back against the housing and the spool (**2**) returns in its neutral-central position “0”.
Each coil is fastened to the solenoid tube (**5**) by a ring nut (**6**). A pin (**7**) allows to push the spool (**2**) in emergency conditions, when the solenoid cannot be energized, like in case of voltage shortage.

Technical data

General			
Valve element with 2 solenoids		kg (lbs)	1.5 (3.3)
Valve element with 1 solenoid		kg (lbs)	1.1 (2.5)
Ambient Temperature		°C (°F)	–20....+50 (-4....+122) (NBR seals)
Hydraulic			
Maximum pressure at P, A and B ports		bar (psi)	310 (4500)
Maximum pressure at T		bar (psi)	180 (2610)
Maximum inlet flow		l/min (gpm)	24 (6.3)
E-schemes p closed in the neutral position (connection from A to T and B to T)			Approx. 2.3% of the nominal cross-section
Hydraulic fluid General properties: it must have physical lubricating and chemical properties suitable for use in hydraulic systems such as, for example:			Mineral oil based hydraulic fluids HL (DIN 51524 part 1). Mineral oil based hydraulic fluids HLP (DIN 51524 part 2). For use of environmentally acceptable fluids (vegetable or polyglycol base) please consult us.
Fluid Temperature		°C (°F)	–20....+80 (-4....+176) (NBR seals)
Permissible degree of fluid contamination			ISO 4572: $\beta_x \geq 75$ X=10...12 ISO 4406: class 19/17/14 NAS 1638: class 8
Viscosity range		mm^2/s	20....380 (optimal 30....46)
Electrical			
Voltage type		PWM	120 Hz
Voltage tolerance (nominal voltage)		%	-10 .... +10
Duty			Continuous, with ambient temperature ≤ 50°C (122°F)
Coil wire temperature not to be exceeded		°C (°F)	180 (356)
Insulation class			H
Compliance with			Low Voltage Directive LVD 73/23/EC (2006/95/EC), 2004/108/EC
Coil weight		kg (lbs)	0.228 (0.503)
Voltage		V	12 24
Nominal 100% current		A	1.76 0.94
Coil resistance (nominal at 20°C (68°F))	- Cold value	Ω	3.71 13
	- Max. hot value	Ω	6.1 22.9
Electronic control			
Electronic feed regulators [3)]			Upon request

1) An electronic, open loop type, regulator with plug-in pins EN 175301-803 is available and can be fitted onto the solenoid directly. For valve elements with two solenoids, two electronic regulators are needed.

Note
For applications with different specifications consult us

Code	Voltage [V]	Connector type	Coil description	Marking	Coil Mat no.
=OB 01	12 DC	EN 175301-803 (Ex. DIN 43650)	P45 01	12 DC	R933000088
=OB 03	12 DC	AMP JUNIOR	P45 03	12 DC	R933000089
=OC 01	24 DC	EN 175301-803 (Ex. DIN 43650)	P45 01	24 DC	R933000090
=OC 03	24 DC	AMP JUNIOR	P45 03	24 DC	R933000091

Characteristic curves

Ordering code S3: 4 l/min (1.06 gpm) with Δp 5 bar (73 psi) P>A,B.

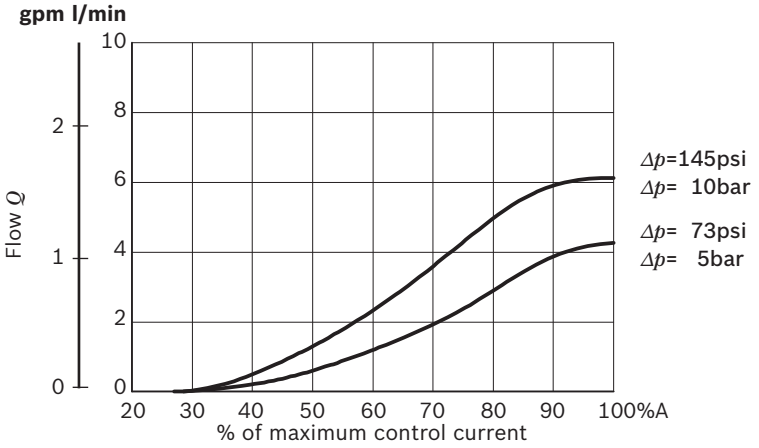

Ordering code S4: 9 l/min (2.38 gpm) with Δp 5 bar (73 psi) P>A,B.

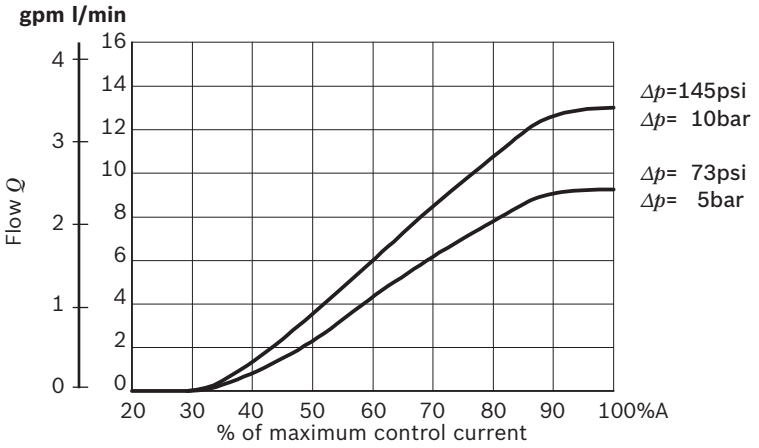

Ordering code S5: 17 l/min (4.50 gpm) with Δp 5 bar (73 psi) P>A,B.

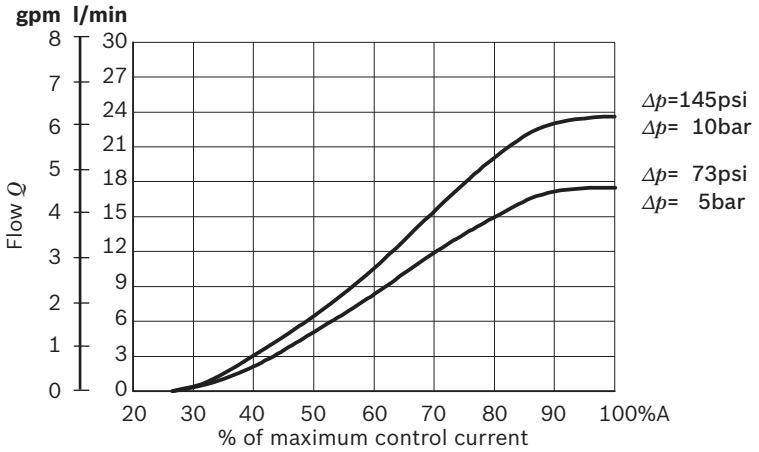

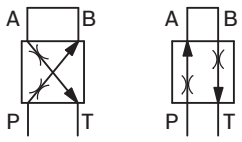

Δp= valve pressure differential (inlet pressure Pp minus load Pl and minus return pressure Pt).

External dimensions and fittings

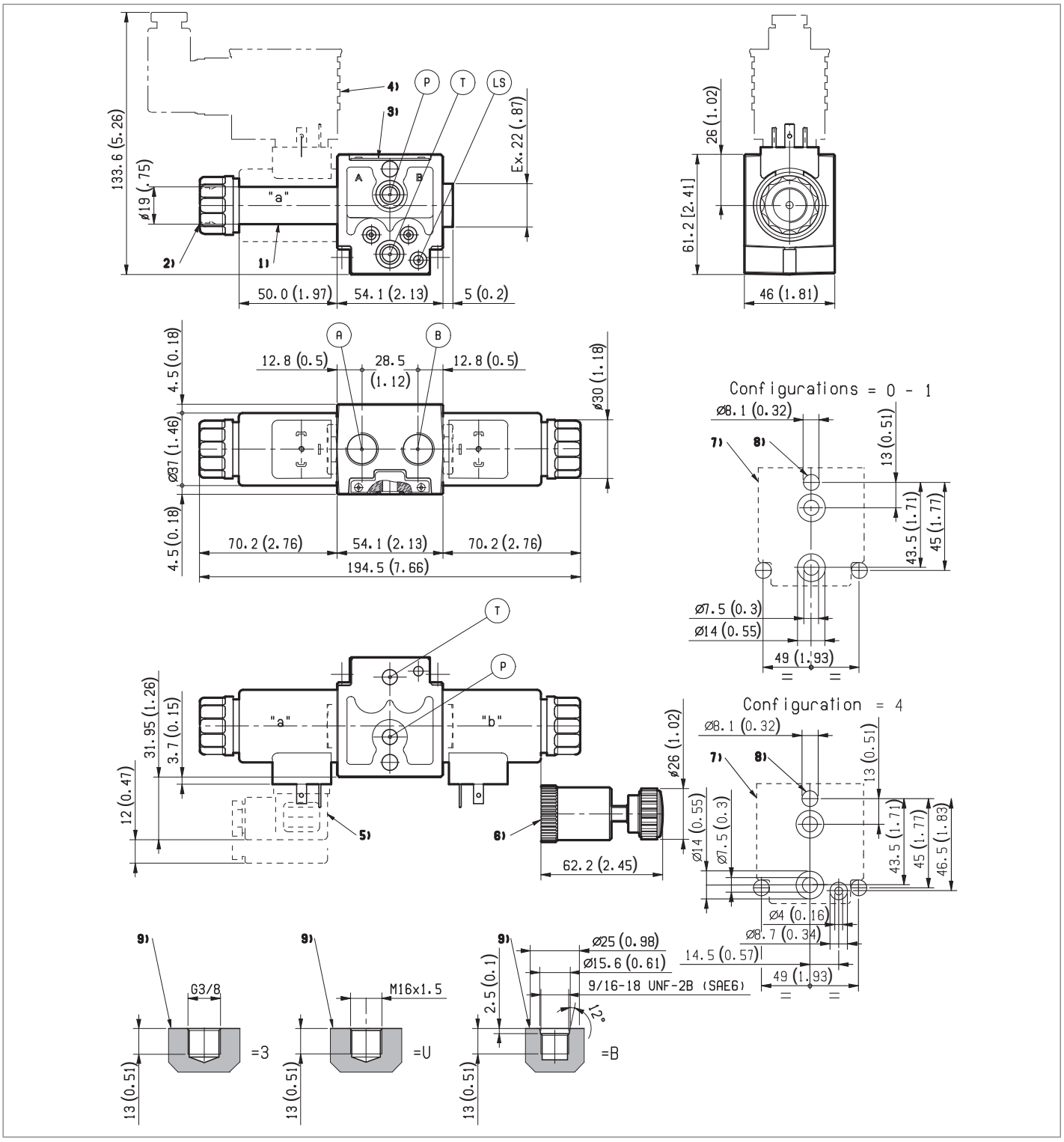

1 Solenoid tube Ø 19 mm (0.75 inch).
2 Ring nut for coil locking Ø 30 mm (1.18 In); torque 6–7 Nm (4.4 – 5.2 ft-lb).
3 Identification label.
4 Dimension with electronic feed regulator.
5 Clearance needed for connector removal.
6 Optional screw type manual override, EF type, for spool opening: it is screwed (torque 6-7 (4.4-5.2 ft-lb)) to the tube as replacement of the coil ring nut. Mat no. R933003848.
7 Flange specifications for coupling to ED intermediate elements.
8 For tie rod and tightening torque information see data sheet RE 18301-90.
9 A and B ports.

Electric connection

01 Protection class: IP 65 when connector with seal is properly screwed down.

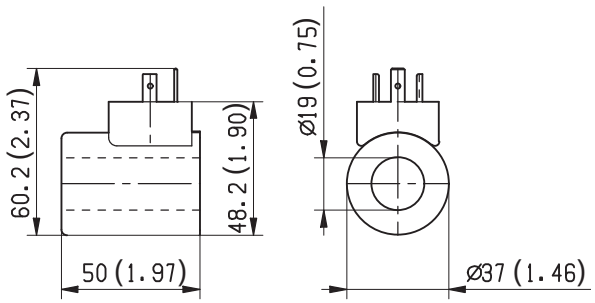

03 Protection class: IP 65 with female connector properly fitted (see drawing).

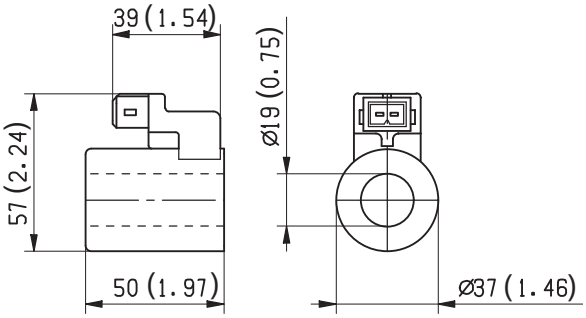

Electronic feed regulator

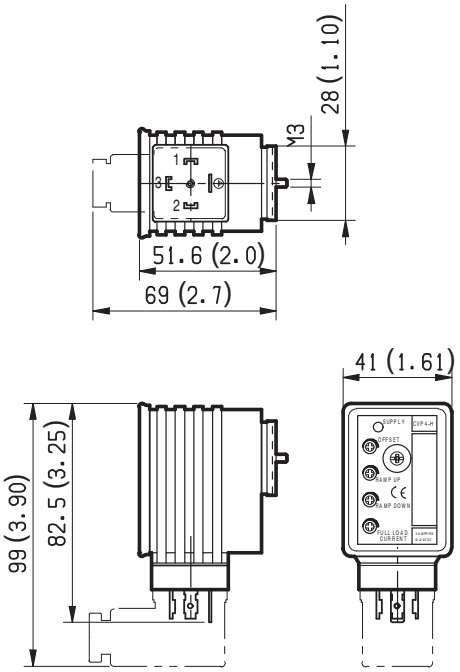

Supply: yellow LED, lit up with power ON.
Off Set: minimum current adjustment. Adjust solenoid current so that the desired minimum value is obtained. Clockwise rotation increases current.
Ramp up: Ramping up time adjustment.
Ramp down: Ramping down time adjustment.
For longer ramping times, turn potentiometers clockwise; for shorter ramping times, turn the potentiometers counter-clockwise.
Full load current: Maximum current adjustment. Adjust solenoid current so that the desired maximum value is obtained (up to 2A). Clockwise rotation increases current.
Frequency adjustment: it is possible to set the PWM frequency obtaining the desired control sensitivity. After removing the external plastic cover, turn the adjusting screw; clockwise rotation increases frequency from 100 to 500 Hz.

Electronic feed regulator	
Regulator ordering code	R933003290
Supply voltage	12-30 VDC
Control Signal	0-10 VDC
Max. output current	2 A
Minimum output current	0....0.6 A
Ramp adjustment up/down	0.1....10 s
PWM Frequency adjustment (pre-set 120 Hz)	100....500 Hz
Ambient operating temperature	-10....+60 °C *(14....+140 °F)*
Weight	0.12 kg *(26.4 lbs)*
Electromagnetic compatibility	EN50081-1/2EN61000-4-2/3/4/5/6
Potentiometer resistance	5....10 κ Ω

Modular directional valves

Directional valve elements, ED series

Designation	Description	Ports/Size	Code	Data sheet	Page
4/3 - 4/2 Directional valve elements with or without secondary relief valves, with or without LS connections.	ED1-Z	G 3/8, SAE6 / Size 6	L8_10_	18301-01	525
4/3 - 4/2 Directional valve elements with or without secondary relief valves, with or without LS connections	ED2-DZ	G 3/8, G 1/2, SAE6, SAE8 / Size 6	L8_11_	18301-02	535
4/3 - 4/2 Directional valve elements with soft-shift	ED2S-DZ	G 3/8 / Size 6	L8011_	18301-03	545
Directional valve elements with proportional control of Tank unloaded excess flow	ED4-PT	Size 6	L808003P_	18301-04	553
Directional valve elements with compensated proportional control of Tank unloaded excess flow	ED4-PTC	Size 6	L808003_	18301-05	563
4/3 - 4/2 Directional valve elements with proportional control and with or without LS connections	ED4-P	G 3/8, SAE6, G 1/2, SAE 8 / Size 6	L8_80_	18301-06	573
4/3 - Directional valve elements with proportional hydraulic control and with or without LS connections	ED-IP	G 3/8, SAE6, G 1/2, SAE8 / Size 6	L8_P5_	18301-07	583
4/3 - Directional valve elements with manual lever operated control and with or without LS connections	ED-LV	G 3/8, SAE 6, G 1/2, SAE8 / Size 6	L8_L1_	18301-08	589
Directional valve elements with proportional control of tank unloaded excess flow	ED4-PT1	Size 6	L808103P...	18301-13	597

4/3 - 4/2 Directional valve elements with or without secondary relief valves, with or without LS connections

L8_10... (ED1-Z)

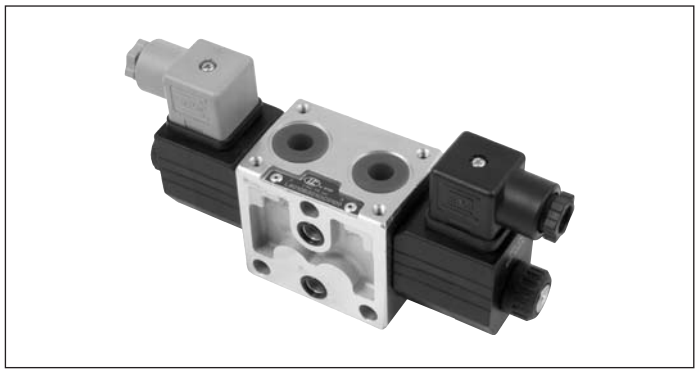

Size 6
Series 00
Maximum operating pressure 310 bar (4500 psi)
Maximum flow 30 l/min (7.9 gpm)
Port connections G 3/8 - SAE6

General specifications

Valve elements with solenoid operated directional spool.
Control spools operated by solenoids with removable coils.
In the de-energized condition, the control spool is held in the central position by return springs.
Wet pin tubes for DC coils, with push rod for mechanical override; nickel plated surface.
Coils can be rotated 360° around the tube; they can be energized by AC current through special connectors with rectifier (RAC).
Manual override (push-button or screw type) available as option.

Contents

Ordering details	2
Symbols	2
Functional description	4
Technical data	4
Characteristic curves	6
External dimensions and fittings	7
Electric connection	10

RF 1030 - 01/02 2016, Bosch Rexroth AG

Ordering details

● = Available – = Not available

01	02	03	04	05	06	07	08	09	10
L	**8**	**_**	**10**	**_ _ _ _**	**_ _**	**_ _**	**_**	**_**	**_ _**

Family

01	Directional Valve elements ED	**L**

Type

02	Size 6	**8**

Configuration

03	Standard	**0**
	With secondary valve on A[3]	**1**
	With secondary valve on B[3]	**2**
	With secondary valves on A and B	**3**
	With channels for Load Sensing	**4**

Coil type

04	C36	**10**

Spool variants[1]

05	4/3 operated on both sides a and b	**_ 2 _ _**
	4/2 operated on side a only	**_ 3 _ _**
	4/2 operated on side b only	**_ 4 _ _**

Voltage supply		**31**	**07**	**03**	**04**	**01**	**00**	
06	Without coil	–	–	–	–	–	●	**00**
	12V DC	●	●	●	●	●	–	**OB**
	13V DC	–	●	–	–	●	–	**AD**
	24V DC	●	●	●	●	●	–	**OC**
	27V DC	–	●	–	–	●	–	**AC**
	48V DC	–	–	●	–	●	–	**OD**
	110V DC	–	–	–	–	●	–	**OE**
	24V AC (21.5 DC)	–	–	–	–	●	–	**OV**
	110V AC (98 DC)	–	–	–	–	●	–	**OW**
	230V AC (207 DC)	–	–	–	–	●	–	**OZ**

Electric connections

07	Without coils	**00**
	With coils, without mating connector DIN EN 175301-803	**01** [5]
	With coils, with bi-directional diode, without mating connector vertical Amp-Junior	**03**
	With coils, with bi-directional diode, without mating connector horizontal Amp-Junior	**04**
	With coils, with bi-directional diode, without mating connector DT04-2P	**07**
	With coils and bipolar sheathed lead 350mm (13,8 in) long with bi-directional diode	**31**

Ports

08	G 3/8 DIN 3852	**0**
	9/16-18 UNF 2-B (SAE6)	**1**

Secondary valves setting

09	50-210 bar (725-3045 psi)	**0** [4]
	100-310 bar (1450-4500 psi)	**1**
	25-50 bar (362-725 psi)	**2**
	50-100 bar (725-1450 psi)	**3**

Options

10	No options	**No code**
	Lever type manual override [2]	**_ _**
	Push-button type manual override	**0P**
	Screw type manual override	**0F**

1) The required hydraulic symbol and spool variant can be chosen by consulting page 3.
2) Available only for A, B, E and F spool configurations. See page 9 for code details.
3) The secondary valves have a maximum flow capacity of 6 l/min (1.6 gpm).
4) Without secondary valves (versions L80__; L84__), the standard configuration corresponds to “0”.
5) For connectors ordering code see data sheet RE 18325-90.

Spool variants

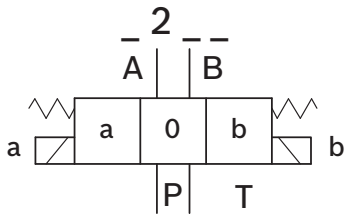

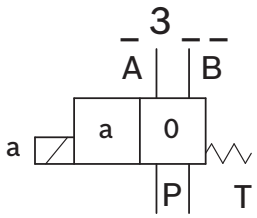

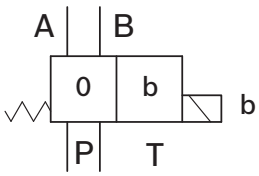

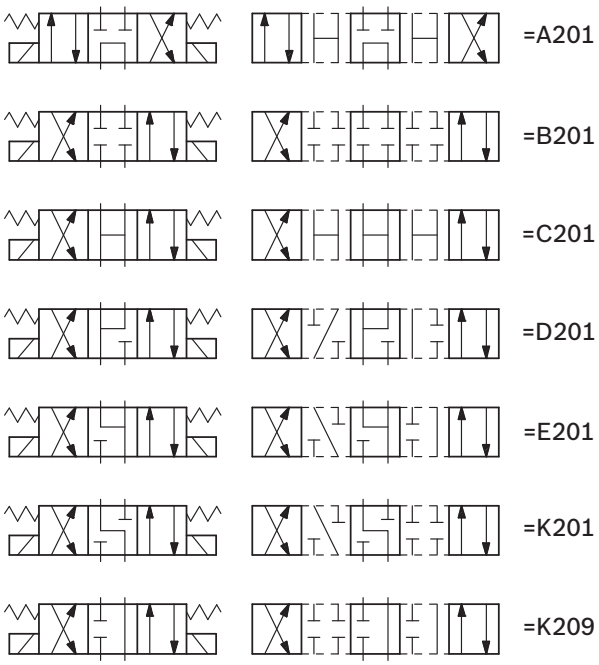

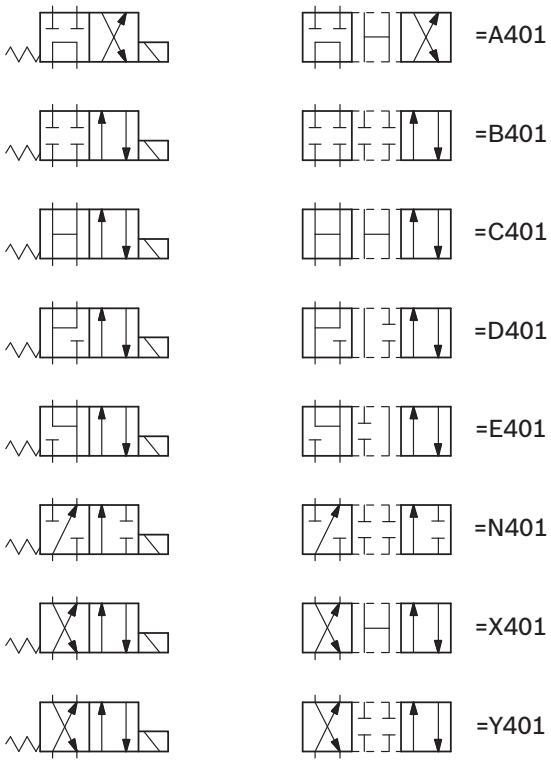

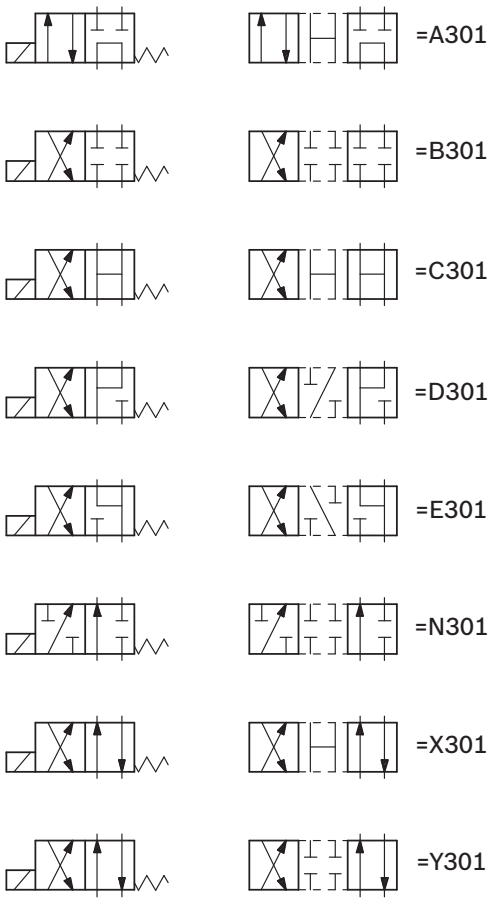

Functional description

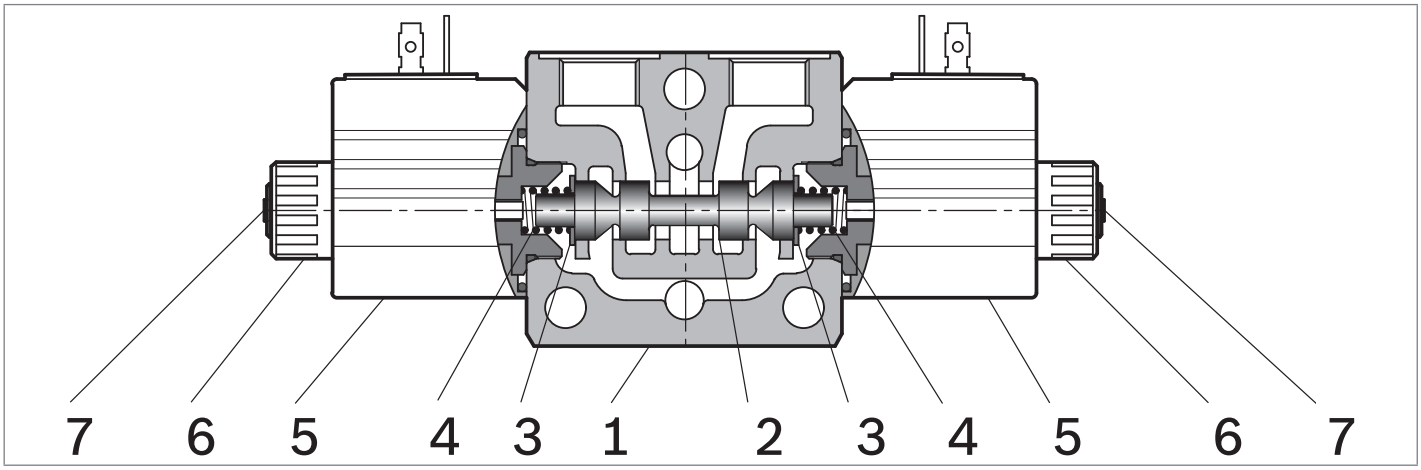

The sandwich plate design directional valve elements L8_10... are compact direct operated solenoid valves which control the start, the stop and the direction of the oil flow. These elements basically consist of a stackable housing (**1**) with a control spool (**2**), one or two solenoids (**5**), and one or two return springs (**4**).
When energized, the force of the solenoid (**5**) pushes the control spool (**2**) from its neutral-central position “0” to the required end position “a” or “b”, and the required flow from P to A (with B to T), or P to B (with A to T) is achieved.
Once the solenoid is de-energized, the return spring (**4**) pushes the spool thrust washer (**3**) back against the housing and the spool returns in its neutral-central position.
Each coil is fastened to the solenoid tube by a ring nut (**6**).
A pin (**7**) allows to push the spool (**2**) in emergency conditions, when the solenoid cannot be energized, like in case of voltage shortage.

Technical data

General		
Valve element with 2 solenoids	kg (lbs)	1.55 (3.42)
Valve element with 1 solenoid	kg (lbs)	1.25 (2.76)
Valve element with 2 solenoids, with lever type emergency	kg (lbs)	1.9 (4.2)
Valve element with 1 solenoid, with lever type emergency	kg (lbs)	1.6 (3.5)
Ambient Temperature	°C (°F)	–20....+50 (-4....+122) (NBR seals)
Hydraulic		
Maximum pressure at P, A and B ports	bar (psi)	310 (4500)
Maximum pressure at T	bar (psi)	250 (3625)
Max pressure, with lever type emergency at T	bar (psi)	200 (2900)
Maximum inlet flow	l/min (gpm)	30 (7.9)
Hydraulic fluid General properties: it must have physical lubricating and chemical properties suitable for use in hydraulic systems such as, for example:		Mineral oil based hydraulic fluids HL (DIN 51524 part 1). Mineral oil based hydraulic fluids HLP (DIN 51524 part 2). For use of environmentally acceptable fluids (vegetable or polyglycol base) please consult us.
Fluid Temperature	°C (°F)	–20....+80 (-4....+176) (NBR seals)
Permissible degree of fluid contamination		ISO 4572: $\beta_x \geq 75$ X=12...15 ISO 4406: class 20/18/15 NAS 1638: class 9
Viscosity range	mm^2/s	5....420

Electrical										
Voltage type		DC (AC only with RAC connection)								
Voltage tolerance (nominal voltage)	%	-10 .... +10								
Duty		Continuous, with ambient temperature ≤ 50°C (122°F)								
Coil wire temperature not to be exceeded	°C (°F)	150 (302)								
Insulation class		H								
Compliance with		Low Voltage Directive LVD 73/23/EC (2006/95/EC), 2004/108/EC								
Coil weight with connection EN 175301-803	kg (lbs)	0.215 (0.44)								
Voltage	V	12	13	24	27	48	110	24 +RAC (21,5)	110 +RAC (98)	230 +RAC (207)
Voltage type		DC	DC	DC	DC	DC	DC	DC	DC	DC
Power consumption	W	26	26	26	26	26	26	29	29	29
Current (nominal at 20 °C (68 °F))	A	2.15	2.00	1.10	1.00	0.54	0.27	1.20	0.29	0.14
Resistance (nominal at 20 °C (68 °F))	Ω	5.5	6.5	22	28	89	413	18	338	1430

Note
For applications with different specifications consult us

Code	Voltage [V]	Connector type	Coil description	Marking	Coil Mat no.
=OB 01	12 DC	EN 175301-803 (Ex. DIN 43650)	C3601 12DC	12 DC	R933000044
=OB 03	12 DC	AMP JUNIOR	C3603 12DC	12 DC	R933000047
=OB 04	12 DC	AMP JUNIOR Horizontal	C3604 12DC	12 DC	R933002913
=OB 07	12 DC	DEUTSCH DT 04-2P	C3607 12DC	12 DC	R933000048
=OB 31	12 DC	Cable 350 mm long	C3631 12DC	12 DC	R933000045
=AD 01	13 DC	EN 175301-803 (Ex. DIN 43650)	C3601 13DC	13 DC	R933000051
=AD 07	13 DC	DEUTSCH DT 04-2P	C3607 13DC	13 DC	R933000049
=OC 01	24 DC	EN 175301-803 (Ex. DIN 43650)	C3601 24DC	24 DC	R933000053
=OC 03	24 DC	AMP JUNIOR	C3603 24DC	24 DC	R933000057
=OC 04	24 DC	AMP JUNIOR Horizontal	C3604 24DC	24 DC	R933002914
=OC 07	24 DC	DEUTSCH DT 04-2P	C3607 24DC	24 DC	R933000058
=OC 31	24 DC	Cable 350 mm long	C3637 24DC	24 DC	R933000055
=AC 01	27 DC	EN 175301-803 (Ex. DIN 43650)	C3601 27DC	27 DC	R933000056
=AC 07	27 DC	DEUTSCH DT 04-2P	C3607 27DC	27 DC	R933000050
=OD 01	48 DC	EN 175301-803 (Ex. DIN 43650)	C3601 48DC	48 DC	R933000059
=OD 04	48 DC	AMP JUNIOR Horizontal	C3604 48DC	48 DC	R933002915
=OE 01	110 DC	EN 175301-803 (Ex. DIN 43650)	C3601 110DC	110 DC	R933000061
=OV 01	24 RAC	EN 175301-803 (Ex. DIN 43650)	C3601 21.5DC	21.5 DC	R933000054
=OW 01	110 RAC	EN 175301-803 (Ex. DIN 43650)	C3601 98DC	98 DC	R933000060
=OZ 01	230 RAC	EN 175301-803 (Ex. DIN 43650)	C3601 207DC	207 DC	R933000062

Characteristic curves

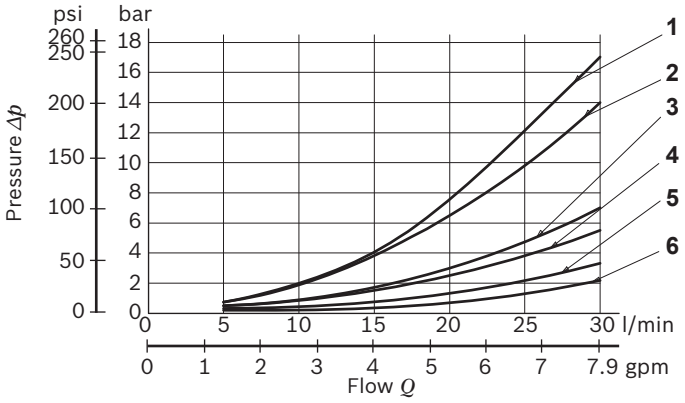

Spool Variant	Curve no.				
	P>T	P>A	P>B	A>T	B>T
A201, A301, A401	3	2	2	1	1
X301, X401		4	4	5	5
Y301, Y401		4	4	5	5
B201, B301, B401		5	5	5	5
C201, C301, C401	5	4	4	6	6
D201, D301, D401		5	5	4	4
E201, E301, E401		4	4	6	6
N301, N401		4	4		
K201, K209		4	4	4	4

Measured with hydraulic fluid ISO-VG32 at 45° ±5 °C (113° ±9 °F); ambient temperature 20 °C (68 °F).

Performance limits

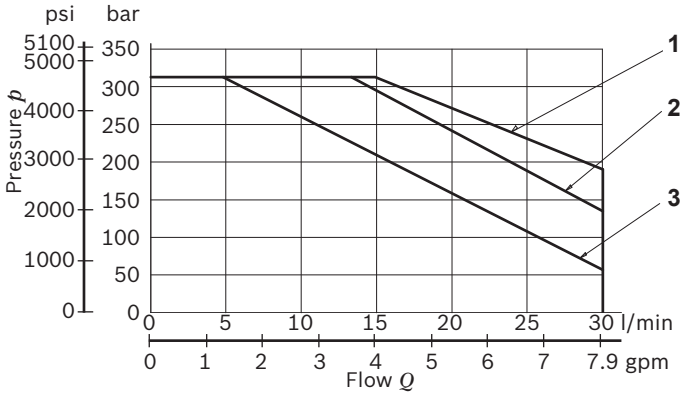

Spool Variant	Curve no.
A201-A301-A401-B201-B301-B401-Y401-X401-X301-Y301-C201-C301-C401-D201-D301-D401	1
K201-E201-E301-E401	2
N301, N401	3

The performance curves are measured with flow going across and coming back, like P>A and B>T. With “lever type” emergency control, the performance limits are slightly lower.

Minimum flow for efficiency of LS control

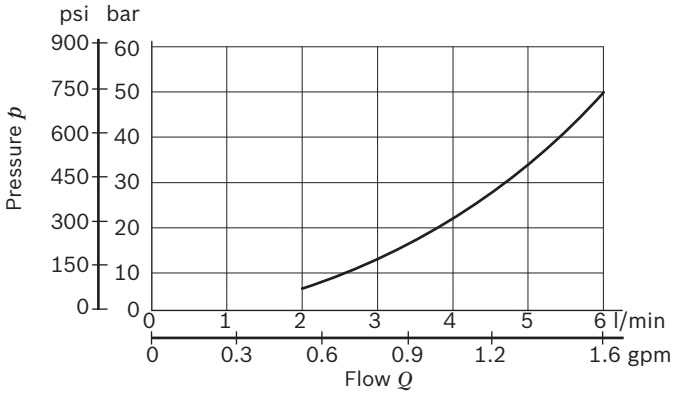

Lowest pressure setting curve for secondary valves

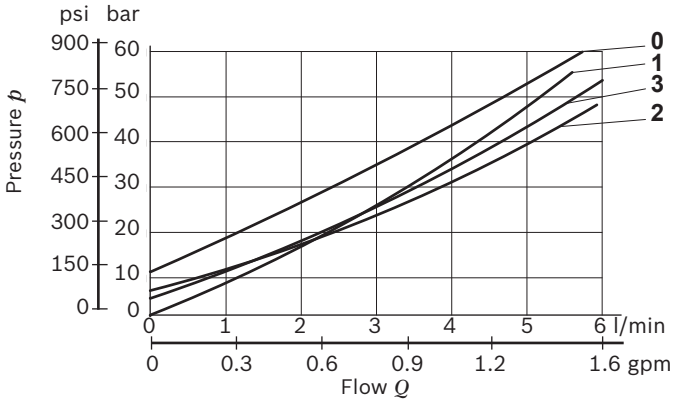

Secondary valve setting	Curve no.
50-210 bar (700-2950 psi)	0
100-310 bar (1400-4500 psi)	1
25-50 bar (350-700 psi)	2
50-100 bar (700-2950 psi)	3

External dimensions and fittings

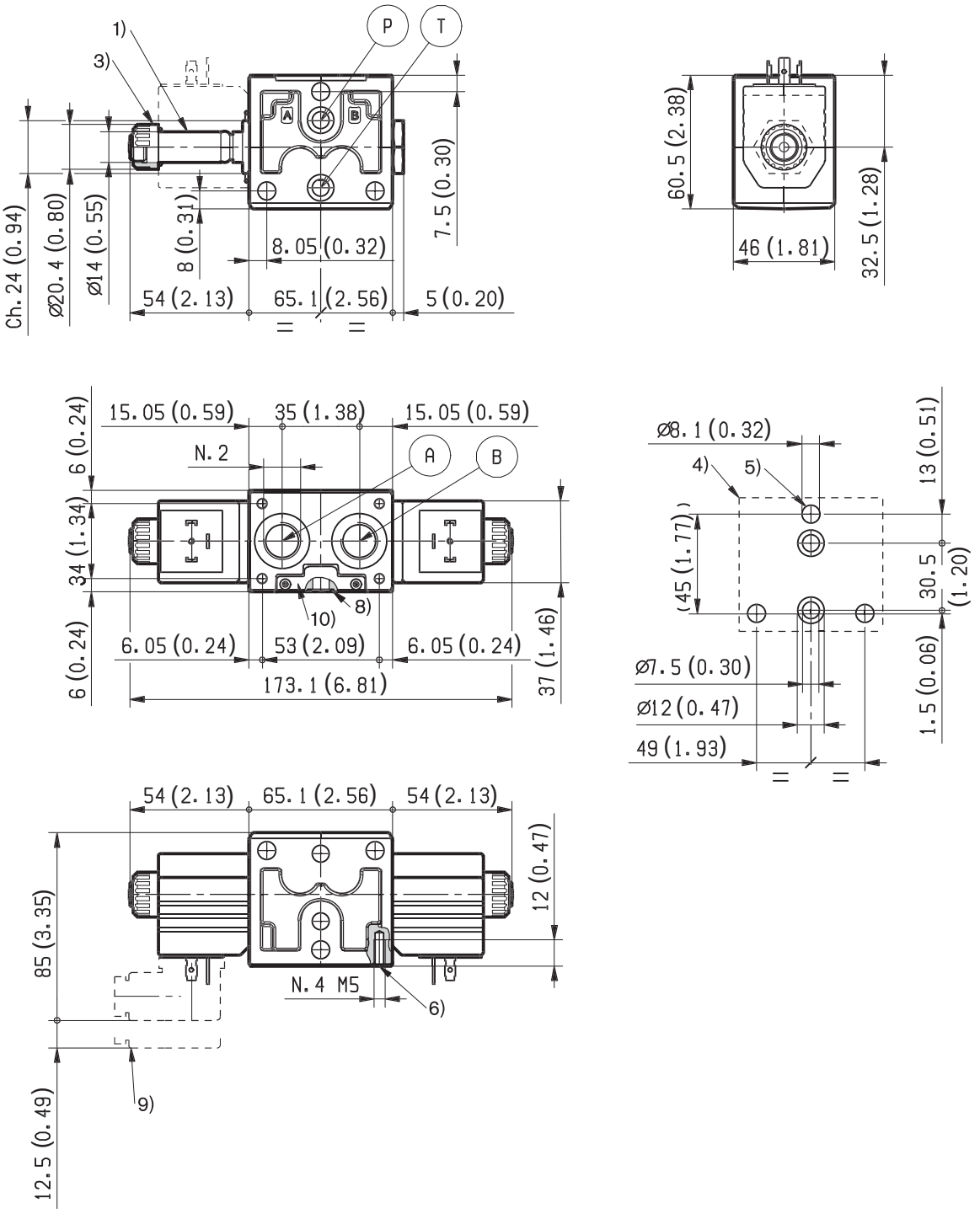

1 Solenoid tube Ø 14 mm (0.55 inch).
3 Ring nut for coil locking (Ø 24 mm); torque 3-4Nm (2.2-3 ft-lb).
4 Flange specifications for coupling to ED intermediate elements.
5 For tie rod and tightening torque information see data sheet RE 18301-90.
6 Four threaded holes M5 for fitting a secondary flangeable element. Bolts M5 with recommended strength class DIN 8.8: torque 5-6 Nm (3.6-4.4 ft-lb).
7 A and B ports.
8 O-Rings for P and T ports.
9 Clearance needed for connector removal.
10 Identification label.

Dimensions [mm (inches)]

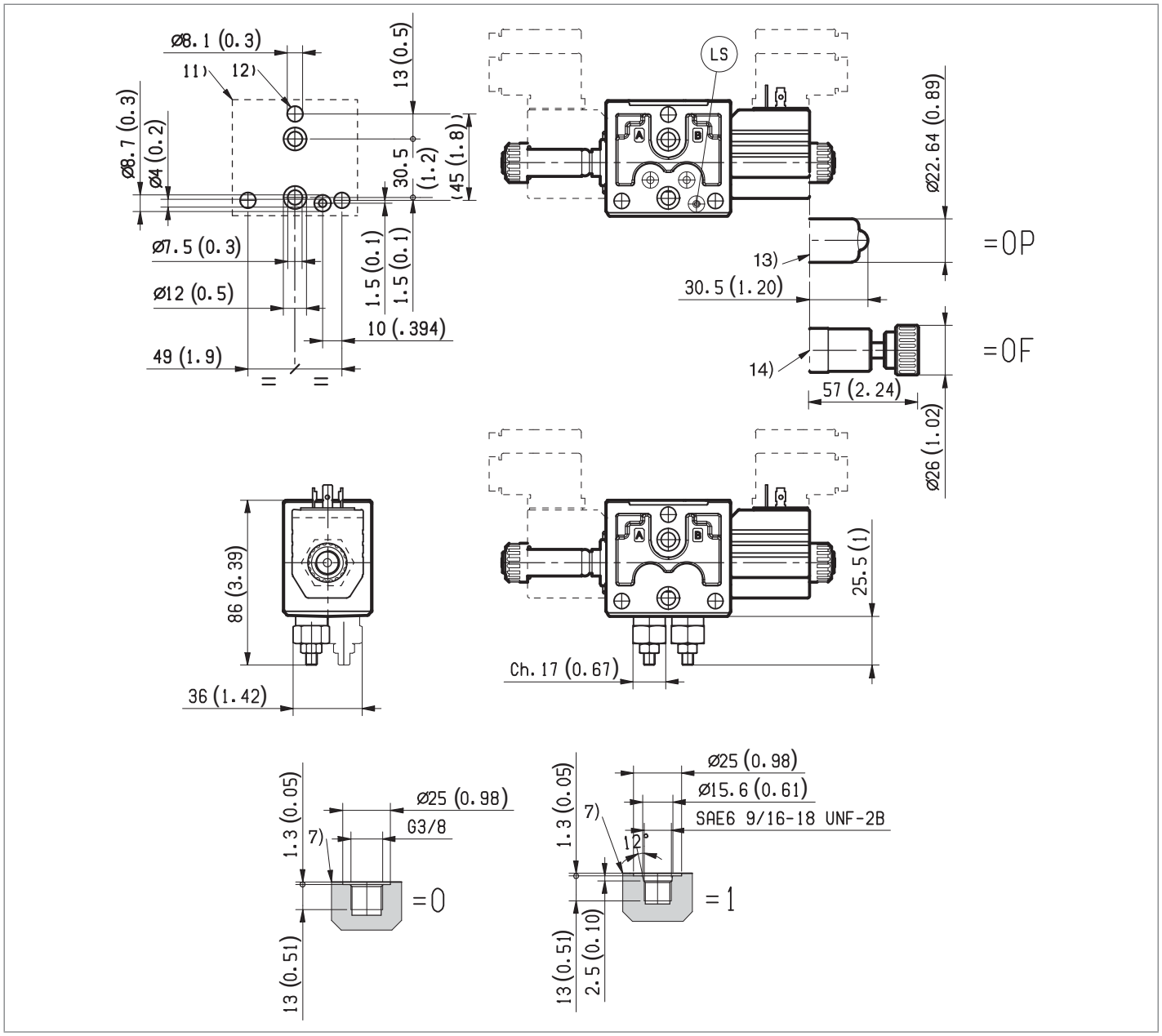

11 Flange specifications for coupling to ED intermediate elements.
12 For tie rod and tightening torque information see data sheet RE 18301-90.
13 Optional push-button manual override, 0P type, for spool opening: it is pressure stuck to the ring nut for coil locking. Mat no. R933000042.
14 Optional screw type manual override, 0F type, for spool opening: it is screwed (torque 6-7 (4.4-5.2 ft-lb)) to the tube as replacement of the coil ring nut. Mat no. R933000021..

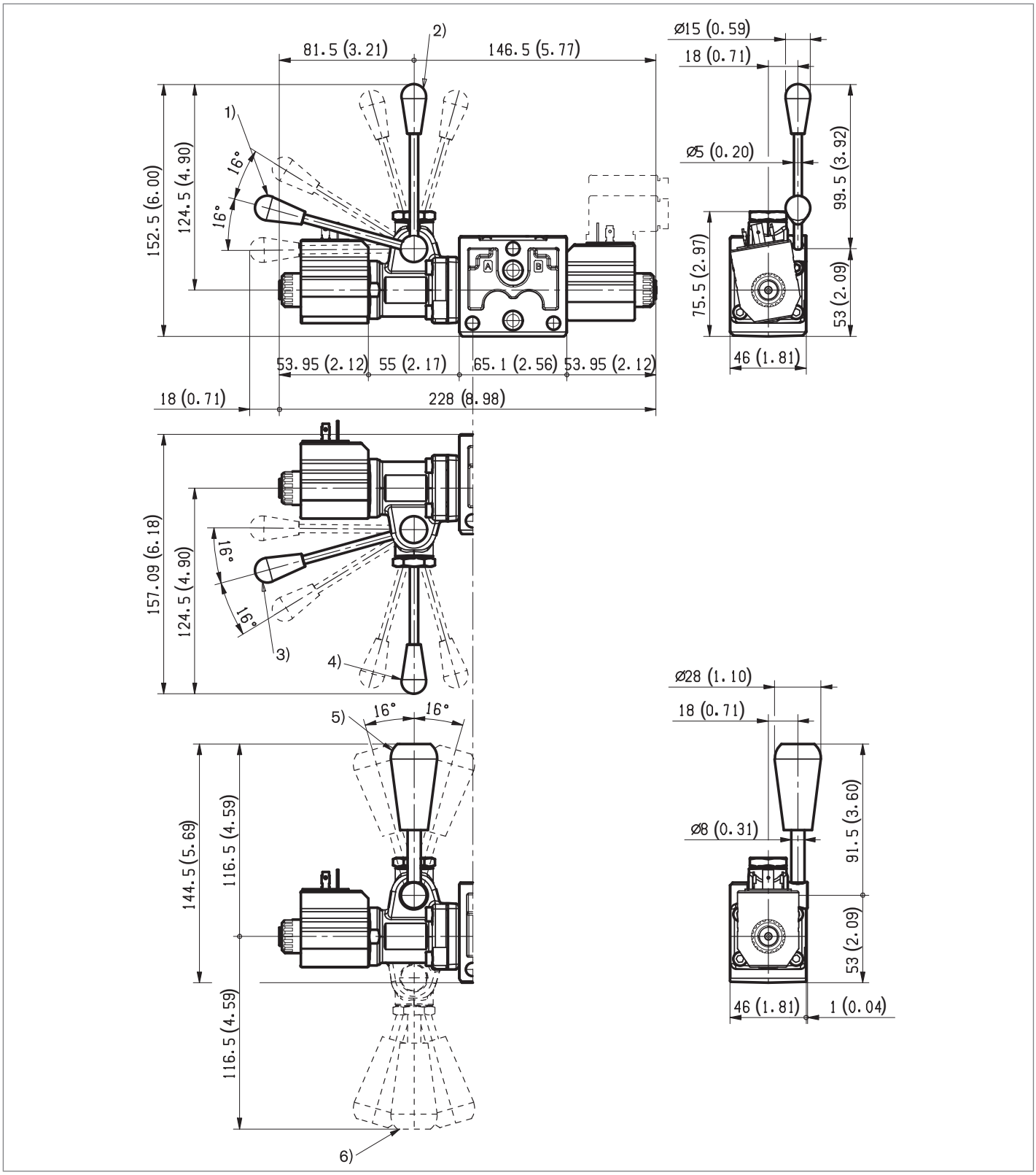

1 Ordering Details: HA (if fitted to side A) or HB (if fitted to side B)
2 Ordering Details: VA (if fitted to side A) or VB (if fitted to side B)
3 Ordering Details: H1 (if fitted to side A) or H9 (if fitted to side B)
4 Ordering Details: V1 (if fitted to side A) or V9 (if fitted to side B)
5 Ordering Details: XA (if fitted to side A) or XB (if fitted to side B)
6 Ordering Details: X1 (if fitted to side A) or X9 (if fitted to side B)

Electric connection

00

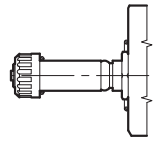

01

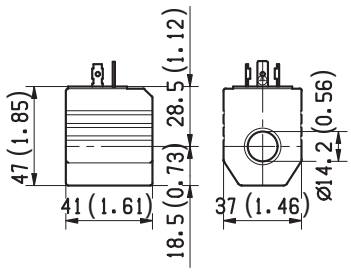

03 Protection class: IP 65 with female connector properly fitted (see drawing).

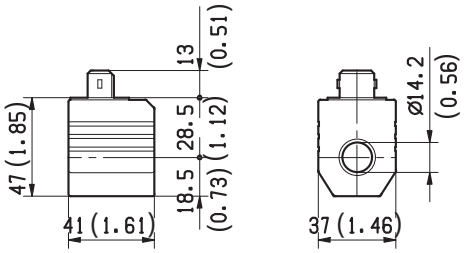

04 Protection class: IP 65 with female connector properly fitted (see drawing).

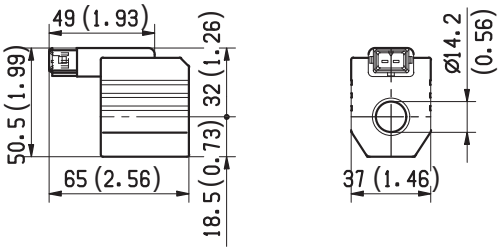

31

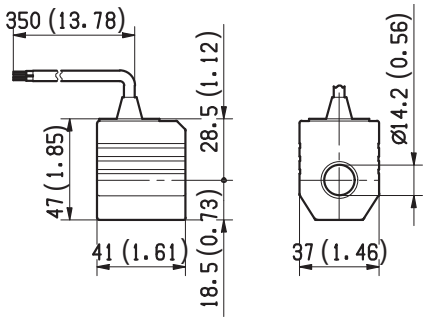

07 Protection class: IP 69 K with female connector properly fitted (see drawing).

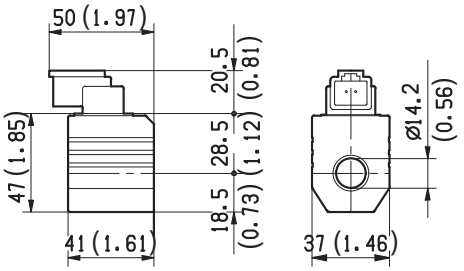

4/3 - 4/2 Directional valve elements with or without secondary relief valves, with or without LS connections

L8_11... (ED2-DZ)

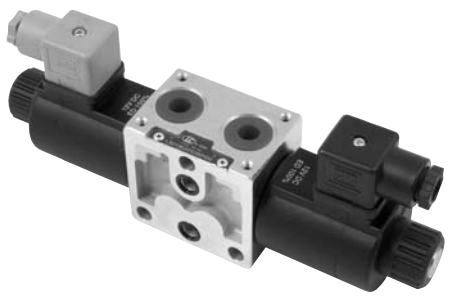

Size 6
Series 00
Maximum operating pressure 310 bar (4500 psi)
Maximum flow 50 l/min (13.2 gpm)
Port connections G 3/8 - SAE6 - G 1/2 - SAE8

General specifications

Valve elements with solenoid operated directional spool.
Control spools operated by solenoids with removable coils.
In the de-energized condition, the control spool is held in the central position by return springs.
Wet pin tubes for DC coils, with push rod for mechanical override; nickel plated surface.
Coils can be rotated 360° around the tube; they can be energized by AC current through special connectors with rectifier (RAC).
Manual override (push-button or screw type) available as option.

Contents

Ordering details	2
Symbols	2
Functional description	4
Technical data	4
Characteristic curves	6
External dimensions and fittings	7
Electric connection	10

RF 1030 - 02/02 2010, Bosch Rexroth AG

Ordering details

01	02	03	04	05	06	07	08	09	10
L	**8**	**_**	**11**	**_ _ _ _**	**_ _**	**_ _**	**_**	**_**	**_ _**

Family

01	Directional Valve elements ED	**L**

Type

02	Size 6	**8**

Configuration

03	Standard	**0**
	With secondary valve on A[3]	**1**
	With secondary valve on B[3]	**2**
	With sec. valves on A and B	**3**
	With channels for Load Sens.	**4**

Coil type

04	C45	**11**

Spool variants[1]

05	4/3 operated on both sides a and b	**_ 2 _ _**
	4/2 operated on side a only	**_ 3 _ _**
	4/2 operated on side b only	**_ 4 _ _**

Voltage supply		**07**	**03**	**01**	**00**	
06	Without coil	–	–	–	●	**00**
	12V DC	●	●	●	–	**OB**
	13V DC	●	●	●	–	**AD**
	24V DC	●	●	●	–	**OC**
	27V DC	●	●	●	–	**AC**
	48V DC	–	–	●	–	**OD**
	110V DC	–	–	●	–	**OE**
	24V AC (21.5 DC)	–	–	●	–	**OV**
	110V AC (98 DC)	–	–	●	–	**OW**
	230V AC (207 DC)	–	–	●	–	**OZ**

Electric connections

07	Without coils	**00**
	With coils, without mating connector DIN EN 175301-803	**01** [5]
	With coils, with bi-directional diode, without mating connector vertical Amp-Junior	**03**
	With coils, with bi-directional diode, without mating connector DT04-2P	**07**

Ports

08	G 3/8 DIN 3852	**0**
	9/16-18 UNF 2-B (SAE6)	**1**
	G 1/2 DIN 3852	**2**
	3/4-16 UNF 2-B (SAE8)	**3**

Secondary valves setting

09	50-210 bar (725-3045 psi)	**0** [4]
	100-310 bar (1450-4500 psi)	**1**
	25-50 bar (362-725 psi)	**2**
	50-100 bar (725-1450 psi)	**3**

Options

10	No options	**No code**
	Lever type manual override [2]	**_ _**
	Push-button type manual override	**0P**
	Screw type manual override	**0F**

● = Available – = Not available

Symbols

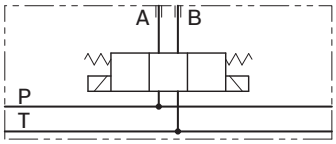

= 0

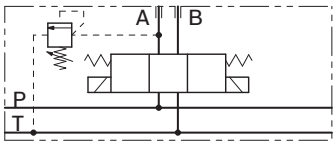

= 1

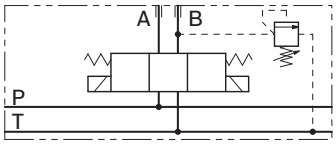

= 2

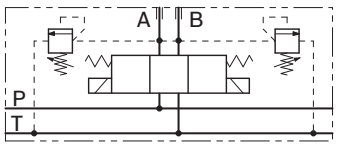

= 3

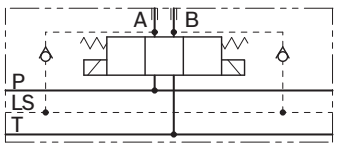

= 4

1) The required hydraulic symbol and spool variant can be chosen by consulting page 3.
2) Available only for A, B, E and F spool configurations. See page 9 for code details.
3) The secondary valves, with maximum flow capacity of 6 l/min (1.6 gpm), are available only for elements with port sizes G 3/8 and SAE 6.
4) Without secondary valves (versions L80__; L84__), the standard configuration corresponds to “0”.
5) For connectors ordering code see data sheet RE 18325-90.

Spool variants

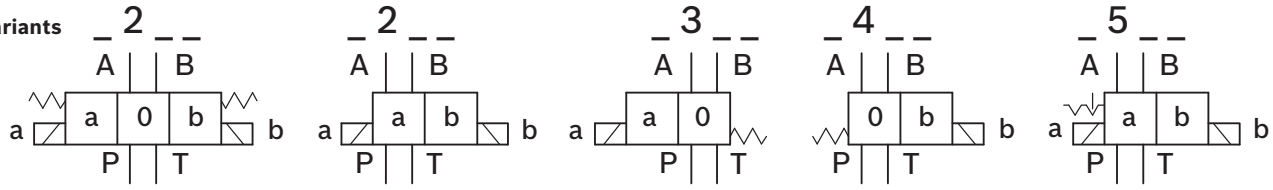

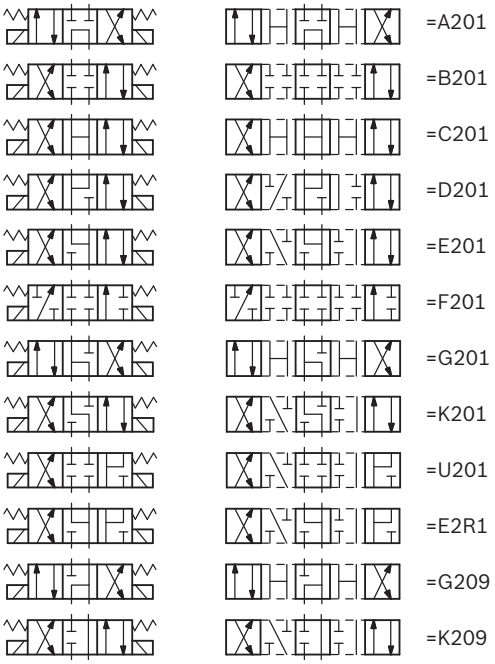
=A201
=B201
=C201
=D201
=E201
=F201
=G201
=K201
=U201
=E2R1
=G209
=K209

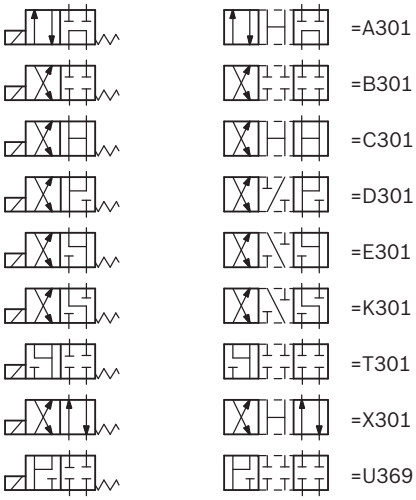
=A301
=B301
=C301
=D301
=E301
=K301
=T301
=X301
=U369

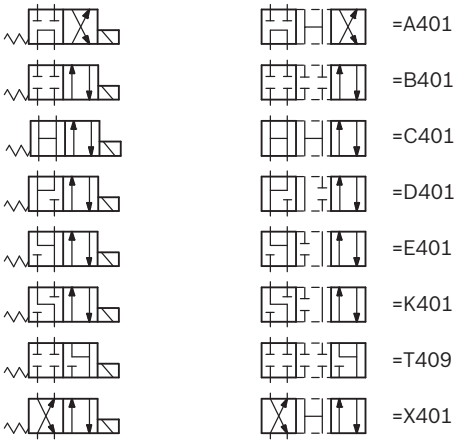
=A401
=B401
=C401
=D401
=E401
=K401
=T409
=X401

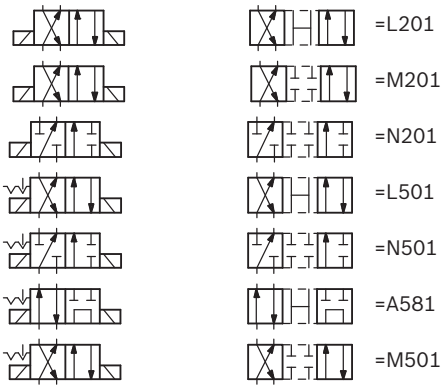
=L201
=M201
=N201
=L501
=N501
=A581
=M501

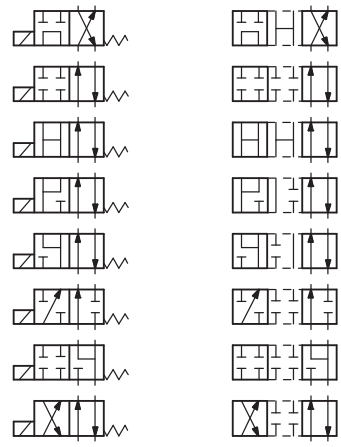
=A361
=B361
=C361
=D361
=E361
=N301
=T361
=Y301

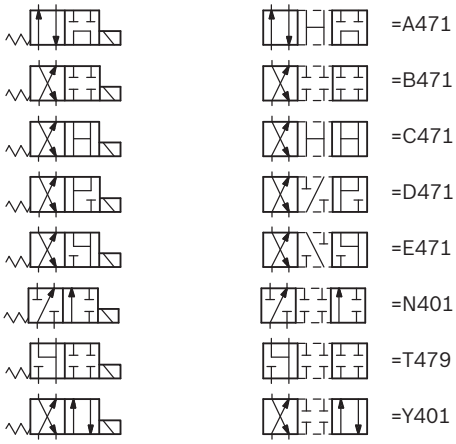
=A471
=B471
=C471
=D471
=E471
=N401
=T479
=Y401

Functional description

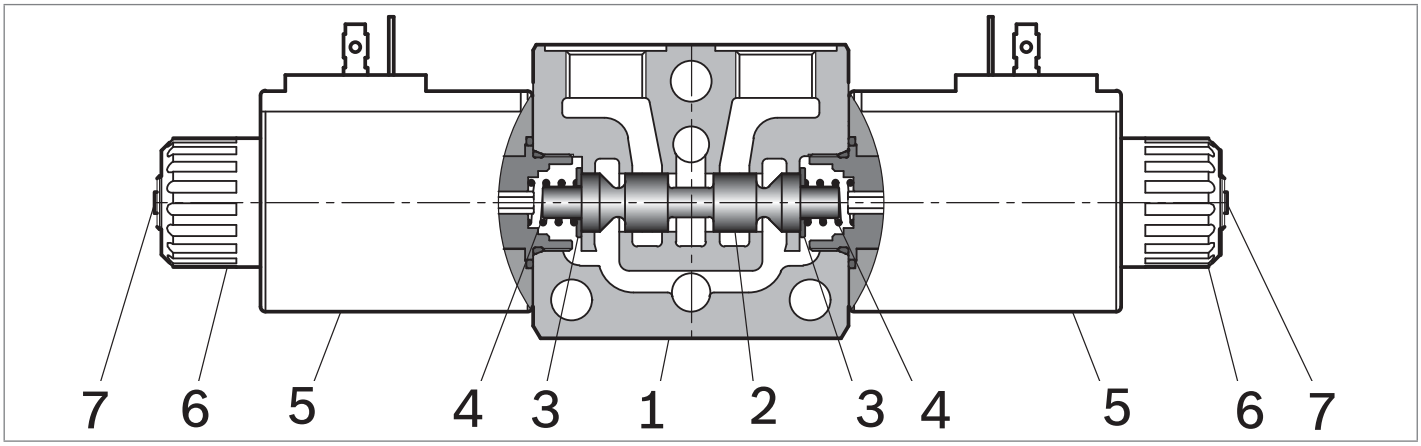

The sandwich plate design directional valve elements L8_11... are compact direct operated solenoid valves which control the start, the stop and the direction of the oil flow. These elements basically consist of a stackable housing (**1**) with a control spool (**2**), one or two solenoids (**5**), and one or two return springs (**4**).
When energized, the force of the solenoid (5) pushes the control spool (**2**) from its neutral-central position “0” to the required end position “a” or “b”, and the required flow from P to A (with **B** to **T**), or P to B (with **A** to **T**) is achieved.
Once the solenoid is de-energized, the return spring (**4**) pushes the spool thrust washer (**3**) back against the housing and the spool returns in its neutral-central position.
Each coil is fastened to the solenoid tube by a ring nut (**6**).
A pin (**7**) allows to push the spool (**2**) in emergency conditions, when the solenoid cannot be energized, like in case of voltage shortage.

Technical data

General		
Valve element with 2 solenoids	kg (lbs)	1.95 (4.3)
Valve element with 1 solenoid	kg (lbs)	1.45 (3.2)
Valve element with 2 solenoids, with lever type emergency	kg (lbs)	2.2 (4.85)
Valve element with 1 solenoid, with lever type emergency	kg (lbs)	1.7 (3.75)
Ambient Temperature	°C (°F)	–20....+50 (-4....+122) (NBR seals)
Hydraulic		
Maximum pressure at P, A and B ports	bar (psi)	310 (4500)
Maximum pressure at T	bar (psi)	250 (3625)
Max pressure, with lever type emergency at T	bar (psi)	200 (2900)
Maximum inlet flow	l/min (gpm)	50 (13.2)
Hydraulic fluid General properties: it must have physical lubricating and chemical properties suitable for use in hydraulic systems such as, for example:		Mineral oil based hydraulic fluids HL (DIN 51524 part 1). Mineral oil based hydraulic fluids HLP (DIN 51524 part 2). For use of environmentally acceptable fluids (vegetable or polyglycol base) please consult us.
Fluid Temperature	°C (°F)	–20....+80 (-4....+176) (NBR seals)
Permissible degree of fluid contamination		ISO 4572: $\beta_x \geq 75$ X=12...15 ISO 4406: class 20/18/15 NAS 1638: class 9
Viscosity range	mm^2/s	5....420

Electrical										
Voltage type		DC (AC only with RAC connection)								
Voltage tolerance (nominal voltage)	%	-10 .... +10								
Duty		Continuous, with ambient temperature ≤ 50°C (122°F)								
Coil wire temperature not to be exceeded	°C (°F)	150 (302)								
Insulation class		H								
Compliance with		Low Voltage Directive LVD 73/23/EC (2006/95/EC), 2004/108/EC								
Coil weight with connection EN 175301-803	kg (lbs)	0.335 (0.74)								
Voltage	V	12	13	24	27	48	110	24 +RAC (21,5)	110 +RAC (98)	230 +RAC (207)
Voltage type		DC	DC	DC	DC	DC	DC	DC	DC	DC
Power consumption	W	33	31	33	33	33	35	33	33	35
Current (nominal at 20 °C (68 °F))	A	2.8	2.3	1.4	1.2	0.7	0.32	1.6	0.34	0.16
Resistance (nominal at 20 °C (68 °F))	Ω	4.24	5.42	17	21.8	69.8	341.8	13.6	285	1229

Note
For applications with different specifications consult us

Code	Voltage [V]	Connector type	Coil description	Marking	Coil Mat no.
OB 01	12 DC	EN 175301-803 (Ex. DIN 43650)	C4501 12DC	12 DC	R933000026
OB 03	12 DC	AMP JUNIOR	C4503 12DC	12 DC	R933000027
OB 07	12 DC	DEUTSCH DT 04-2P	C4507 12DC	12 DC	R933000030
AD 01	13 DC	EN 175301-803 (Ex. DIN 43650)	C4501 13DC	13 DC	R933000028
AD 03	13 DC	AMP JUNIOR	C4503 13DC	13 DC	R933000029
AD 07	13 DC	DEUTSCH DT 04-2P	C4507 13DC	13 DC	R933000031
OC 01	24 DC	EN 175301-803 (Ex. DIN 43650)	C4501 24DC	24 DC	R933000034
OC 03	24 DC	AMP JUNIOR	C4503 24DC	24 DC	R933003630
OC 07	24 DC	DEUTSCH DT 04-2P	C4507 24DC	24 DC	R933000032
AC 01	27 DC	EN 175301-803 (Ex. DIN 43650)	C4501 27DC	27 DC	R933000035
AC 03	27 DC	AMP JUNIOR	C4503 27DC	27 DC	R933000036
AC 07	27 DC	DEUTSCH DT 04-2P	C4507 27DC	27 DC	R933000033
OD 01	48 DC	EN 175301-803 (Ex. DIN 43650)	C4501 48DC	48 DC	R933000037
OE 01	110 DC	EN 175301-803 (Ex. DIN 43650)	C4501 110DC	110 DC	R933000040
OV 01	24 RAC	EN 175301-803 (Ex. DIN 43650)	C4501 21.5DC	21.5 DC	R933000038
OW 01	110 RAC	EN 175301-803 (Ex. DIN 43650)	C4501 98DC	98 DC	R933000039
OZ 01	230 RAC	EN 175301-803 (Ex. DIN 43650)	C4501 207DC	207 DC	R933000041

Characteristic curves

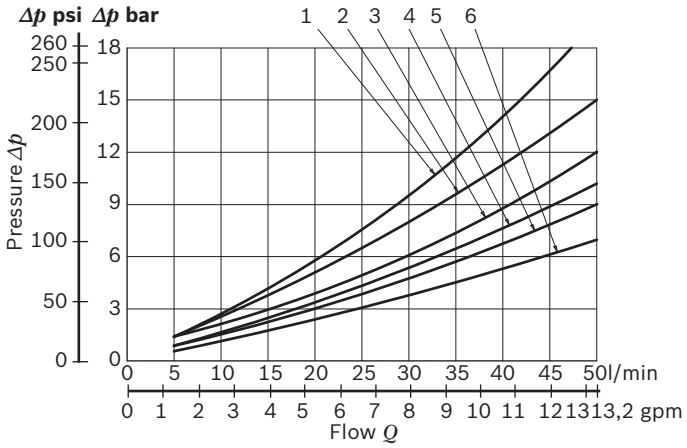

Spool Variant	Curve no.				
	P>T	P>A	P>B	A>T	B>T
A201-A301-A401-A401-A471-A361-G201-G209	2	1	1	1	1
B201-B301-B401-B471-B361-L201-M201-U201-L501-M501		4	4	4	4
C201-C301-C401-C471-C361	6	5	5	6	6
D201-D301-D471-D401-D361		6	6	5	5
E201-E301-E401-E471-E361-E2R1-T301-T409		5	5	6	6
K201-K209-K301-T361-K401-T479		5	5	3	3
X301-X401-Y301-Y401		4	4	4	4
N301-N201-N401-F201-U361-N501		4	4		

Measured with hydraulic fluid ISO-VG32 at 45° ±5 °C (113° ±9 °F); ambient temperature 20 °C (68 °F).

Performance limits

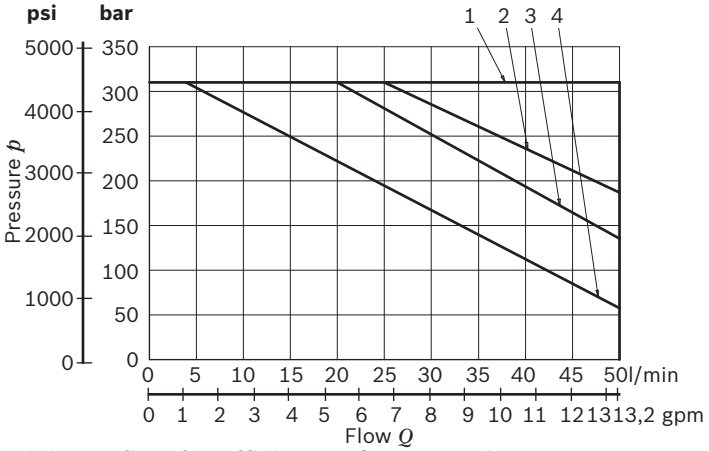

Spool Variant	Curve no.
A201-A301-A401-A471-A361- C201-C301-C401-C471-C361-G201-G209 - T301- T401-T479- T361	1
B201-B301-B401-B471-B361- D201-D301-D401-D471-D361 -K201-K209-K301-K401	2
X301-X401-Y301-Y401-M201-L201-U201-U369 -E201-E301-E401-E471-E361-E2R1	3
N301-N401-N201-N501-L501-M501-F201	4

The performance curves are measured with flow going across and coming back, like P>A and B>T. With “lever type” emergency control, the performance limits are slightly lower.

Minimum flow for efficiency of LS control

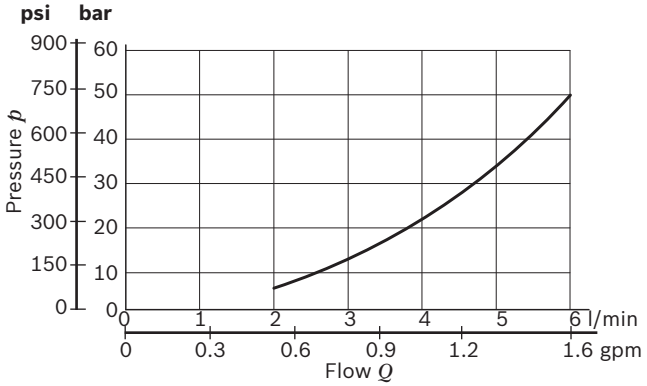

Lowest pressure setting curve for secondary valves

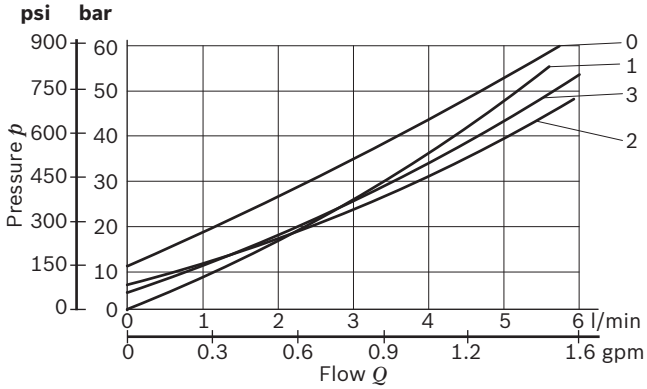

Secondary valve setting	Curve no.
50-210 bar (700-2950 psi)	0
100-310 bar (1400-4500 psi)	1
25-50 bar (350-700 psi)	2
50-100 bar (700-2950 psi)	3

External dimensions and fittings

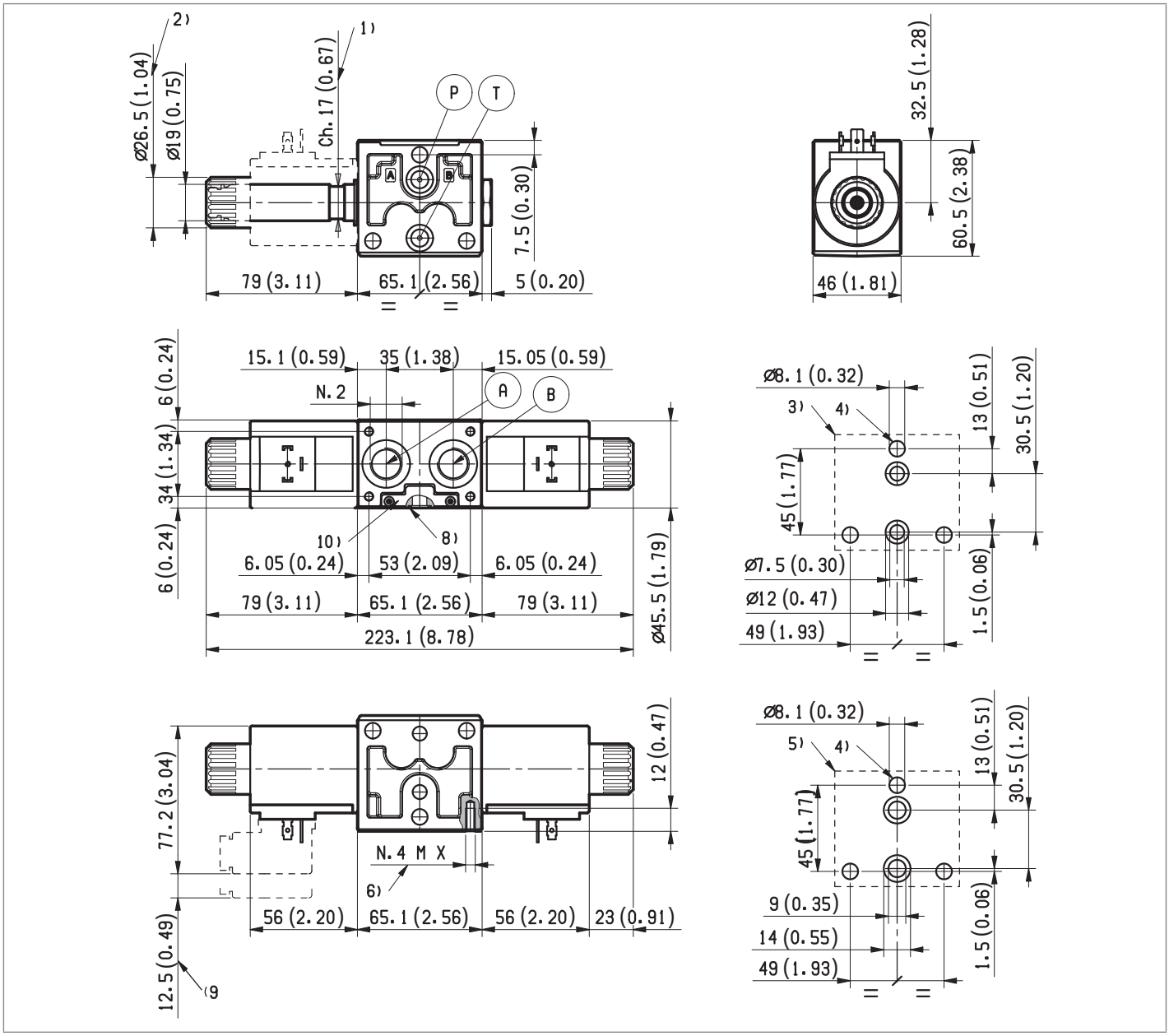

1 Solenoid tube Ø 19 mm (0.75 inch).
2 Ring nut for coil locking (Ø 26.5 mm); torque 3 – 4 Nm (2.2-3 ft-lb).
3 Flange specifications for coupling to ED intermediate elements with ports G 3/8 and SAE 6.
4 For tie rod and tightening torque information see data sheet RE 18301-90.
5 Flange specifications for coupling to ED intermediate elements with ports G 1/2 and SAE 8.
6 Four threaded holes M5 for fitting a secondary flangeable element (only for elements with ports G 3/8 and SAE 6). Bolts M5 with recommended strength class DIN 8.8: torque 5 – 6 Nm (3.6-4.4 ft-lb).
7 A and B ports.
8 O-Rings for P and T ports.
9 Clearance needed for connector removal.
10 Identification label.

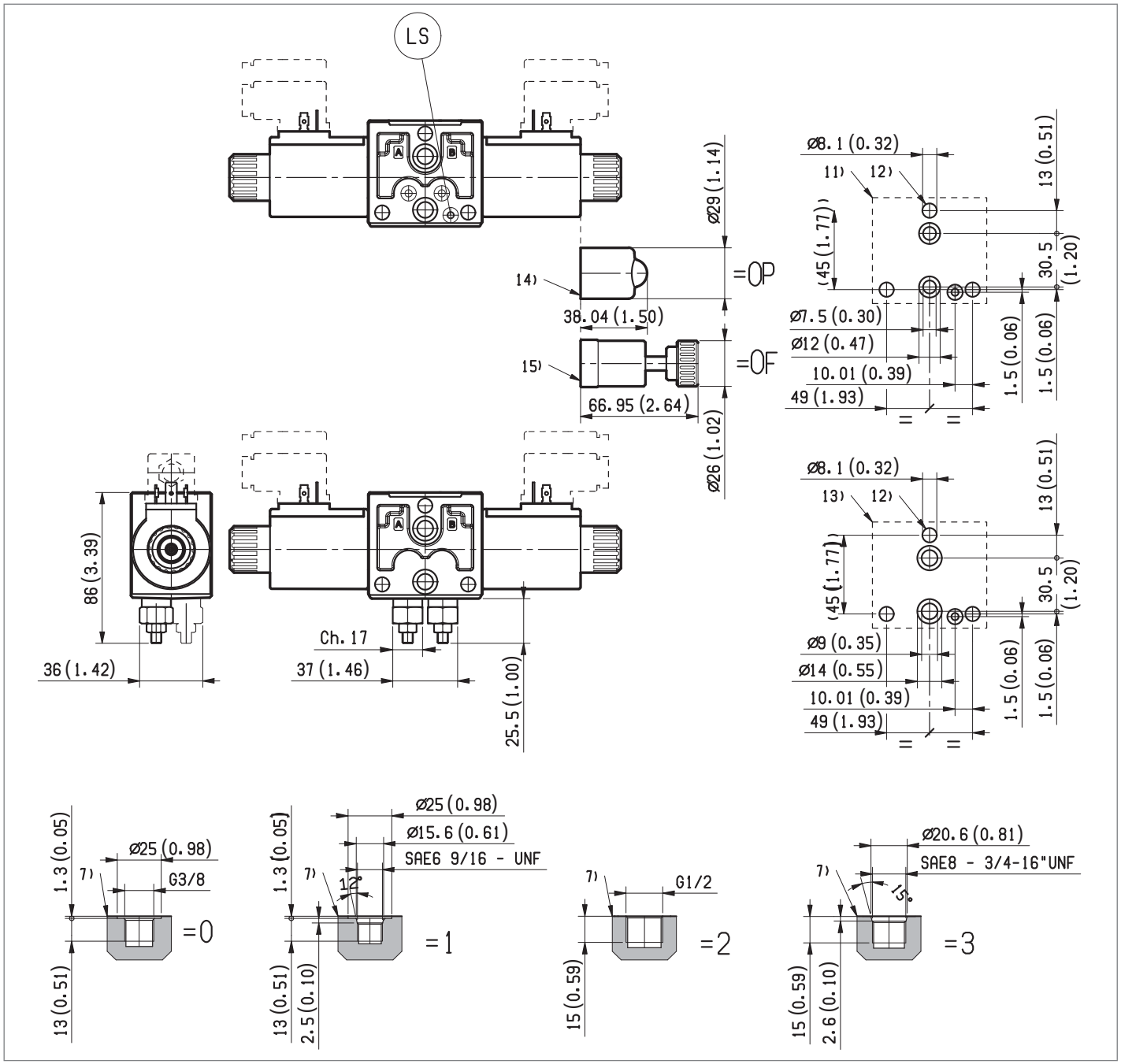

11 Flange specifications for coupling to the ED intermediate elements with LS channels (for port sizes G 3/8 and SAE6).

12 For tie rod and tightening torque information see data sheet RE 18301-90.

13 Flange specifications for coupling to the ED intermediate elements with LS channels (for port sizes G 1/2 and SAE 8).

14 Optional push-button manual override, 0P type, for spool opening: it is pressure stuck to the ring nut for coil locking. Mat no. R933000043.

15 Optional screw type manual override, 0F type, for spool opening: it is screwed (torque 6-7 (4.4-5.2 ft-lb)) to the tube as replacement of the coil ring nut. Mat no. R933007215.

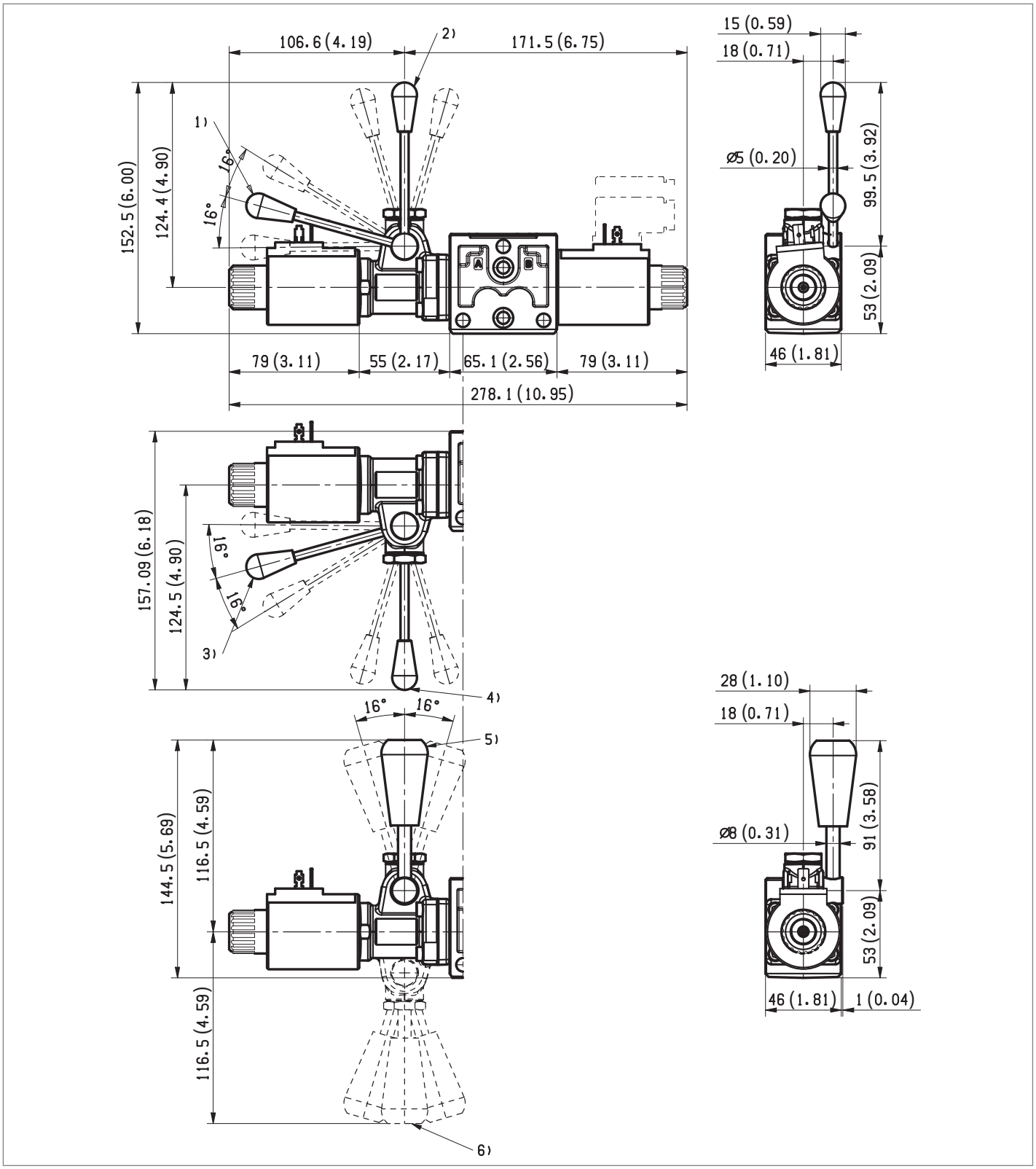

1 Ordering Details: HA (if fitted to side A) or HB (if fitted to side B).
2 Ordering Details: VA (if fitted to side A) or VB (if fitted to side B).
3 Ordering Details: H1 (if fitted to side A) or H9 (if fitted to side B).
4 Ordering Details: V1 (if fitted to side A) or V9 (if fitted to side B).
5 Ordering Details: XA (if fitted to side A) or XB (if fitted to side B).
6 Ordering Details: X1 (if fitted to side A) or X9 (if fitted to side B).

Electric connection

00

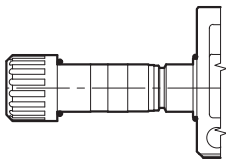

01

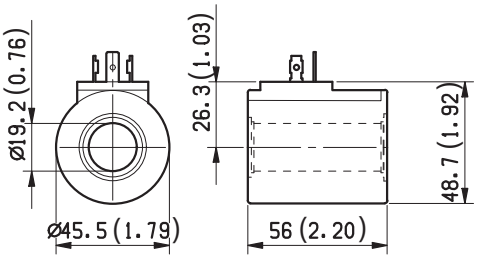

03 Protection class: IP 65 with female connector properly fitted (see drawing).

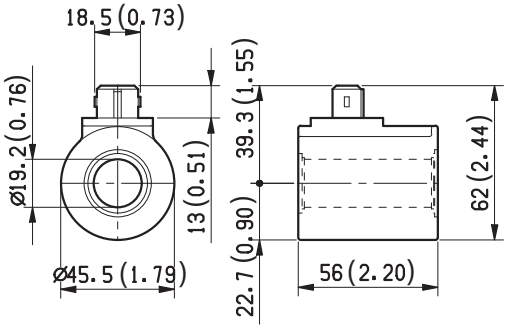

07 Protection class: IP 69 K with female connector properly fitted (see drawing).

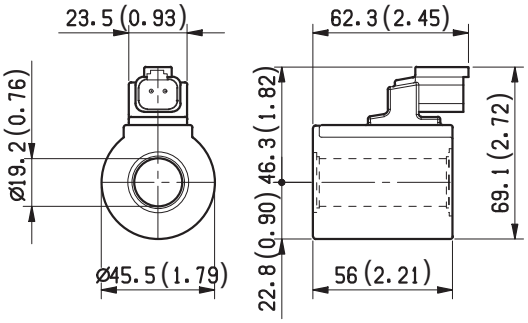

4/3 - 4/2 Directional valve elements with soft-shift

L8011... (ED2S-DZ)

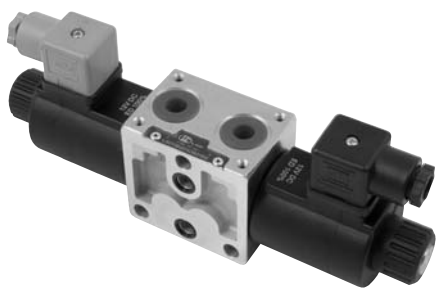

Size 6
Series 00
Maximum operating pressure 310 bar (4500 psi)
Maximum flow 50 l/min (13.2 gpm)
Port connections G 3/8

General specifications

Valve elements with solenoid operated directional spool.
Switching time adjustment by calibrated orifices.
Control spools operated by solenoids with removable coils.
In the de-energized condition, the control spool is held in the central position by return springs.
Wet pin tubes for DC coils, with push rod for mechanical override; nickel plated surface.
Coils can be rotated 360° around the tube; they can be energized by AC current through special connectors with rectifier (RAC).
Manual override (push-button or screw type) available as option.

Contents

Ordering details	2
Symbols	2
Functional description	3
Technical data	3
Characteristic curves	5
External dimensions and fittings	6
Electric connection	7

RF 1080 - 03/02 2010, Bosch Rexroth AG

Ordering details

01	02	03	04	05	06	07	08		09	10
L	**8**	**0**	**11**				**0**	**0**		

Family

01	Directional Valve elements ED	**L**

Type

02	Size 6	**8**

Configuration

03	Standard	**0**

Coil type

04	C45	**11**

Spool variants

05	4/3 operated on both sides a and b	**_ 2 _ _**
	4/2 operated on side a only	**_ 3 _ _**

Voltage supply		**07**	**03**	**01**	**00**	
06	Without coil	–	–	–	●	**00**
	12V DC	●	●	●	–	**OB**
	13V DC	●	●	●	–	**AD**
	24V DC	●	●	●	–	**OC**
	27V DC	●	●	●	–	**AC**
	48V DC	–	–	●	–	**OD**
	110V DC	–	–	●	–	**OE**
	24V AC (21.5 DC)	–	–	●	–	**OV**
	110V AC (98 DC)	–	–	●	–	**OW**
	230V AC (207 DC)	–	–	●	–	**OZ**

Electric connections

07	Without coils	**00**
	With coils, without mating connector DIN EN 175301-803	**01** [1)]
	With coils, with bi-directional diode, without mating connector vertical Amp-Junior	**03**
	With coils, with bi-directional diode, without mating connector DT04-2P	**07**

Ports

08	G 3/8 DIN 3852	**0**

Orefice Type

09	0.4 mm (0,016inch) hole	**E**
	0.5 mm (0,020inch) hole	**G**

Options

10	No options	**No code**
	Standard	**0**
	Push-button type manual override	**P**
	Screw type manual override	**F**

● = Available – = Not available

Symbols

_ 2 _ _

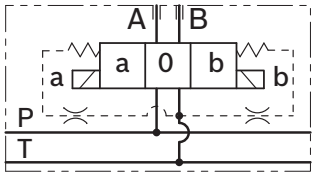

_ 3 _ _

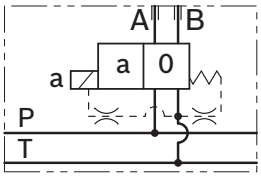

Spool variants

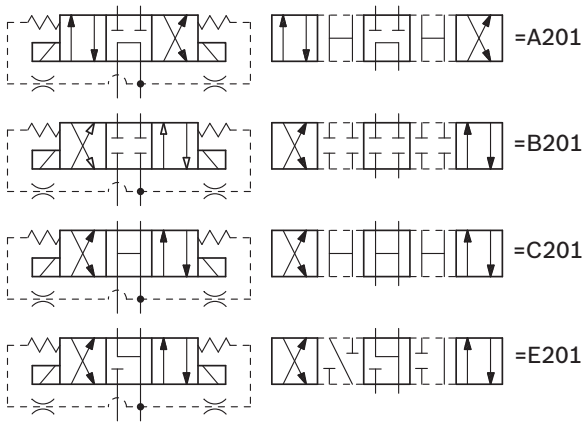

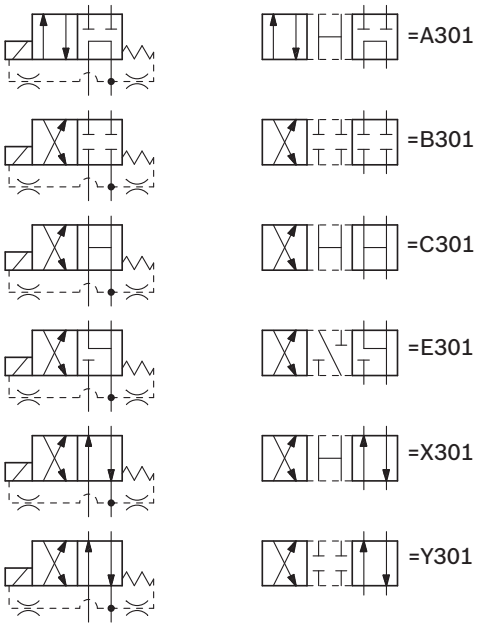

Installation note: in order to garantee the soft-shift function, it is reccomended to install in the „T“ line a check valve with the minimum cracking pressure of 1 bar (14,5 psi).

Bosch Rexroth AG RE 18301-03/02.2013

546

Functional description

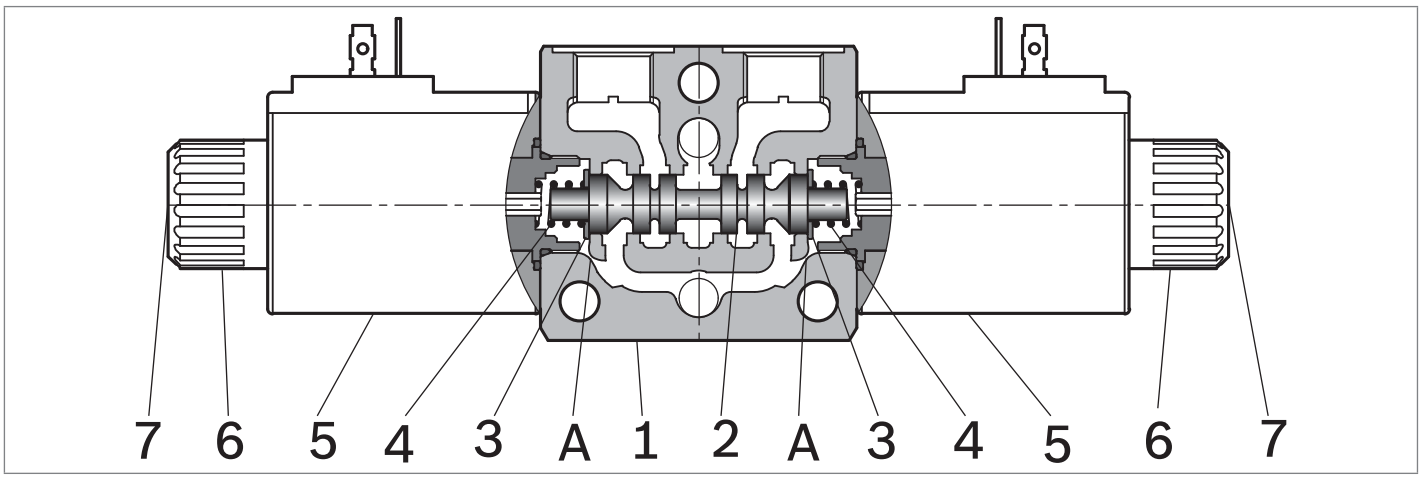

The sandwich plate design directional valve elements L8011... are compact direct operated solenoid valves which control the start, the stop and the direction of the oil flow, with the option to adjust the spool switching time. These elements basically consist of a stackable housing (**1**) with a control spool (**2**), one or two solenoids (**5**), and one or two return springs (**4**).
The spring chambers are connected to the tank port through orifices. When energized, the spool (**2**) travels and oil is pushed to tank from one of the spring chambers: if the cross section of the orifices changes, the switching time changes as well. Three orifice sizes are available: smaller orifice diameter results in longer switching time, even though the actual time is dependent upon pressure, flow and viscosity.
When energized, the force of the solenoid (**5**) pushes the control spool (**2**) from its neutral-central position to the required end position, and the required flow from P to A (with B to T), or P to B (with A to T) is achieved. Once the solenoid is de-energized, the return spring (**4**) pushes the spool thrust washer (**3**) back against the housing and the spool returns in its neutral-central position.
Each coil is fastened to the solenoid tube by a ring nut (**6**). A pin (**7**) allows to push the spool (**2**) in emergency conditions, when the solenoid cannot be energized, like in case of voltage shortage.

Technical data

General		
Valve element with 2 solenoids	kg (lbs)	1.95 (4.3)
Valve element with 1 solenoid	kg (lbs)	1.45 (3.2)
Ambient Temperature	°C (°F)	–20....+50 (-4....+122) (NBR seals)
Not Available with lever emergency		
Hydraulic		
Maximum pressure at P, A and B ports	bar (psi)	310 (4500)
Maximum pressure at T	bar (psi)	250 (3625)
Maximum inlet flow	l/min (gpm)	50 (13.2)
Hydraulic fluid General properties: it must have physical lubricating and chemical properties suitable for use in hydraulic systems such as, for example:		Mineral oil based hydraulic fluids HL (DIN 51524 part 1). Mineral oil based hydraulic fluids HLP (DIN 51524 part 2). For use of environmentally acceptable fluids (vegetable or polyglycol base) please consult us.
Fluid Temperature	°C (°F)	–20....+80 (-4....+176) (NBR seals)
Permissible degree of fluid contamination		ISO 4572: $\beta_x \geq 75$ X=12...15 ISO 4406: class 20/18/15 NAS 1638: class 9
Viscosity range	mm^2/s	5....420

Orifice sizes available in A position		Orifice type	Ø mm (inch)	Code
		E	0,4 (0,016)	18-0093
		G	0,5 (0,020)	18-0094

Electrical										
Voltage type		DC (AC only with RAC connection)								
Voltage tolerance (nominal voltage)	%	-10 .... +10								
Duty		Continuous, with ambient temperature ≤ 50°C (122°F)								
Switching time	ms	max 400, depending from orifice diameter								
Coil wire temperature not to be exceeded	°C (°F)	150 (302)								
Insulation class		H								
Compliance with		Low Voltage Directive LVD 73/23/EC (2006/95/EC), 2004/108/EC								
Coil weight with connection EN 175301-803	kg (lbs)	0.335 (0.74)								
Voltage	V	12	13	24	27	48	110	24 +RAC (21,5)	110 +RAC (98)	230 +RAC (207)
Voltage type		DC	DC	DC	DC	DC	DC	DC	DC	DC
Power consumption	W	33	31	33	33	33	35	33	33	35
Current (nominal at 20 °C (68 °F))	A	2.8	2.3	1.4	1.2	0.7	0.32	1.6	0.34	0.16
Resistance (nominal at 20 °C (68 °F))	Ω	4.24	5.42	17	21.8	69.8	341.8	13.6	285	1229

Note
For applications with different specifications consult us

Code	Voltage [V]	Connector type	Coil description	Marking	Coil Mat no.
OB 01	12 DC	EN 175301-803 (Ex. DIN 43650)	C4501 12DC	12 DC	R933000026
OB 03	12 DC	AMP JUNIOR	C4503 12DC	12 DC	R933000027
OB 07	12 DC	DEUTSCH DT 04-2P	C4507 12DC	12 DC	R933000030
AD 01	13 DC	EN 175301-803 (Ex. DIN 43650)	C4501 13DC	13 DC	R933000028
AD 03	13 DC	AMP JUNIOR	C4503 13DC	13 DC	R933000029
AD 07	13 DC	DEUTSCH DT 04-2P	C4507 13DC	13 DC	R933000031
OC 01	24 DC	EN 175301-803 (Ex. DIN 43650)	C4501 24DC	24 DC	R933000034
OC 03	24 DC	AMP JUNIOR	C4503 24DC	24 DC	R933003630
OC 07	24 DC	DEUTSCH DT 04-2P	C4507 24DC	24 DC	R933000032
AC 01	27 DC	EN 175301-803 (Ex. DIN 43650)	C4501 27DC	27 DC	R933000035
AC 03	27 DC	AMP JUNIOR	C4503 27DC	27 DC	R933000036
AC 07	27 DC	DEUTSCH DT 04-2P	C4507 27DC	27 DC	R933000033
OD 01	48 DC	EN 175301-803 (Ex. DIN 43650)	C4501 48DC	48 DC	R933000037
OE 01	110 DC	EN 175301-803 (Ex. DIN 43650)	C4501 110DC	110 DC	R933000040
OV 01	24 RAC	EN 175301-803 (Ex. DIN 43650)	C4501 21.5DC	21.5 DC	R933000038
OW 01	110 RAC	EN 175301-803 (Ex. DIN 43650)	C4501 98DC	98 DC	R933000039
OZ 01	230 RAC	EN 175301-803 (Ex. DIN 43650)	C4501 207DC	207 DC	R933000041

Characteristic curves

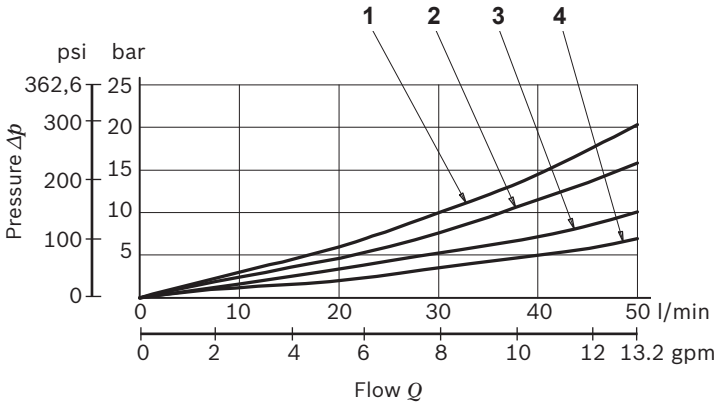

Spool Variant	Curve no.				
	P>T	P>A	P>B	A>T	B>T
A201, A301	2	1	1	1	1
B201, B301		3	3	3	3
C201, C301	4	3	3	4	4
E201, E301		3	3	4	4
X301, Y301		3	3	3	3

Measured with hydraulic fluid ISO-VG32 at 45° ±5 °C [113° ±9 °F]; ambient temperature 20 °C [68 °F].

Performance limits

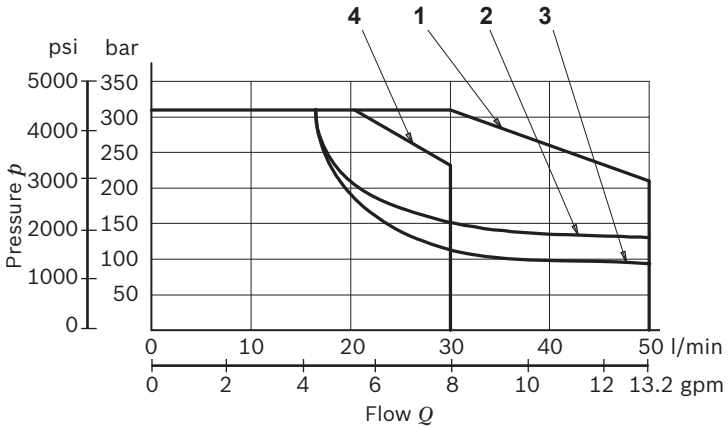

Spool Variant	Curve no.
A201, A301	1
B201, B301, C201, C301	2
E201, E301	3
X301, Y301	4

The performance curves are measured with flow going across and coming back, like P>A and B>T. With “lever type” emergency control, the performance limits are slightly lower.

External dimensions and fittings

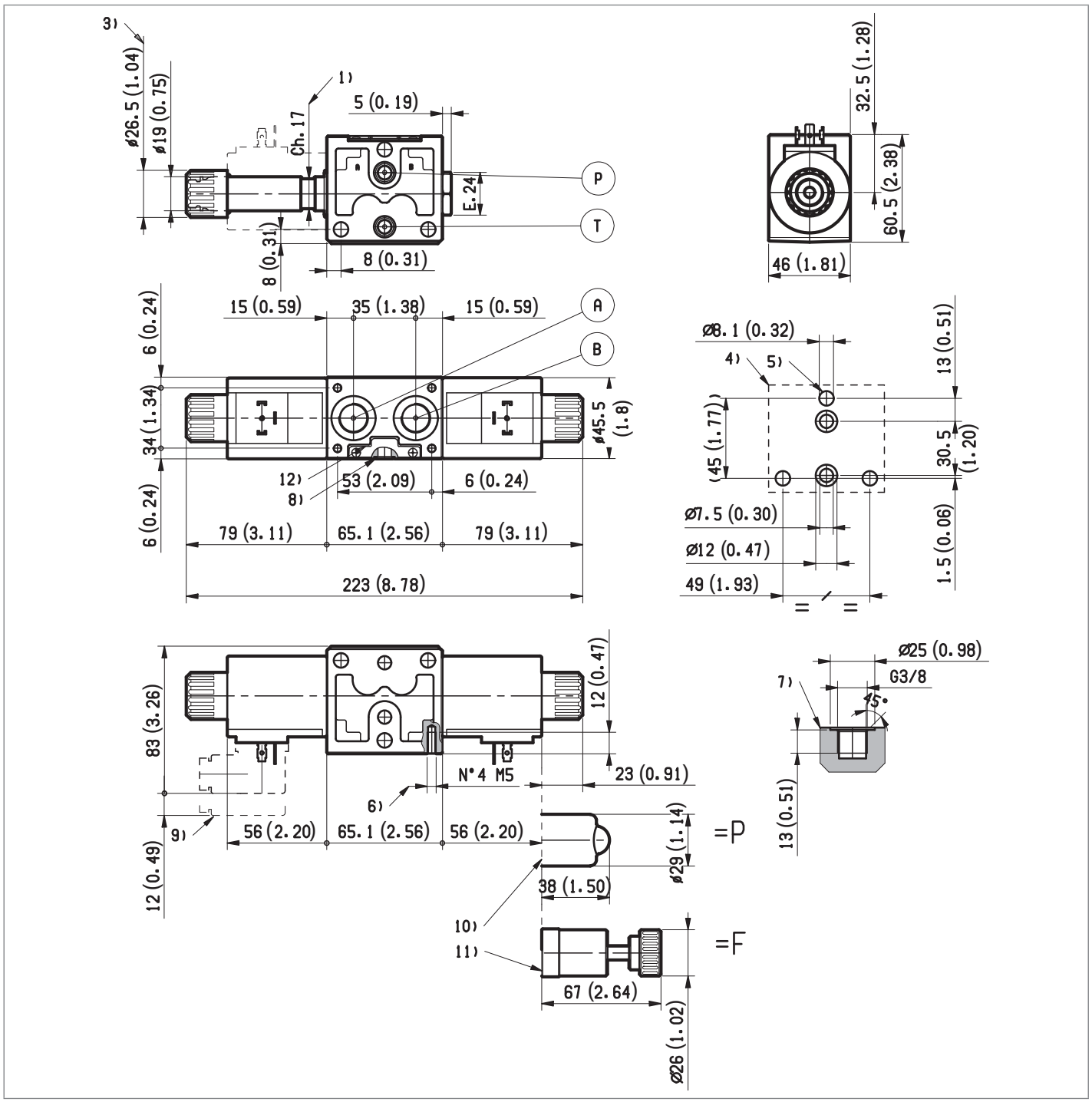

1 Solenoid tube Ø 19 mm (0.75 inch).
3 Ring nut for coil locking (Ø 26,5 mm); torque 5-6 Nm (3.7-4.4 ft-lb).
4 Flange specifications for coupling to ED intermediate elements.
5 For tie rod and tightening torque information see data sheet RE 18301-90.
6 Four threaded holes M5 for fitting a secondary flangeable element. Bolts M5 with recommended strength class DIN 8.8: torque 5-6 Nm (3.6-4.4 ft-lb).
7 A and B ports.
8 O-Rings for P and T ports.
9 Clearance needed for connector removal.
10 Optional push-button, P type, for emergency spool opening: it is pressure stuck to the ring nut for coil locking. Mat. Number R933000043.
11 Optional screw type emergency, F type, for spool opening: it is screwed (torque 6-7 Nm (4.4-5.2 ft-lb)) to the tube as replacement of the coil ring nut. Mat no. R933007215.
12 Identification label..

Electric connection

00

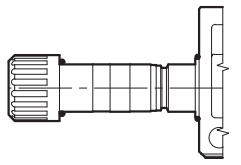

01

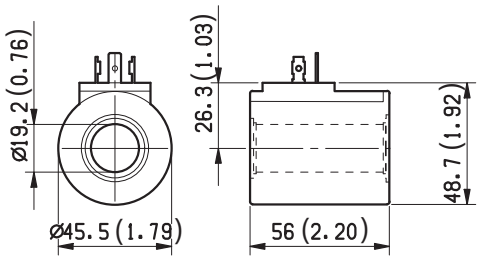

03 Protection class: IP 65 with female connector properly fitted (see drawing).

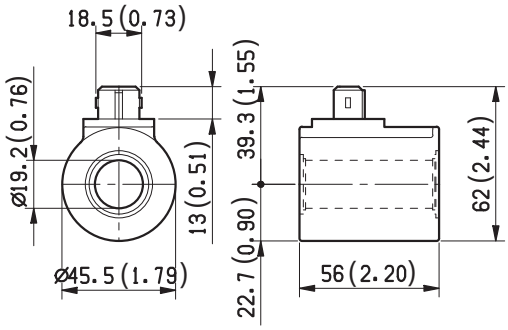

07 Protection class: IP 69 K with female connector properly fitted (see drawing).

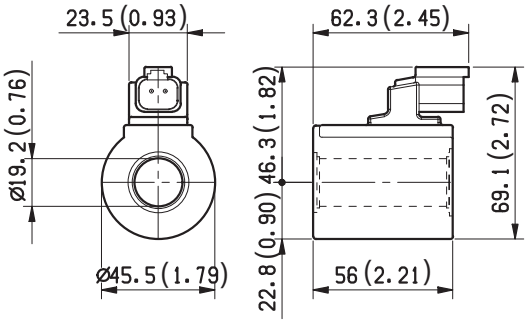

2

Directional valve elements with proportional control of Tank unloaded excess flow

L808003P... (ED4-PT)

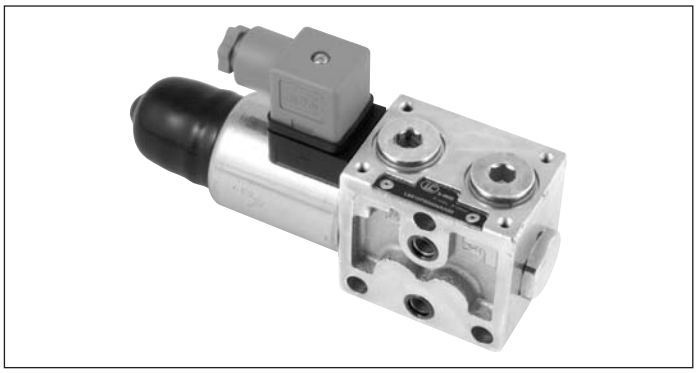

Size 6
Series 00
Maximum operating pressure 310 bar (4500 psi)
Maximum flow 28 l/min (7.4 gpm)

General specifications

Valve element with direct proportional control of spool.
Proportional, non pressure compensated, valve element for partial or total unloading to Tank of P flow.
Control spool operated by solenoids with removable coils.
In the de-energized condition, the control spool is held in normal position by return spring.
Wet pin proportional tubes for DC coils, with push rod for mechanical override; nickel plated surface.
Manual override (push-button, screw or lever type) available as option.

Contents

Ordering details	2
Symbols	2
Example of application	3
Functional description	3
Technical data	4
Characteristic curves	5
External dimensions and fittings	6
Electric connection	8
Electronic feed regulator	9

RF 1080 - 04/02 2016, Bosch Rexroth AG

Ordering details

01	02	03	04	05	06	07		08
L	**80**	**80**	**03P**				**00**	

Family

01	Directional Valve elements ED	**L**

Type

02	Size 6 proportional	**80**

Coil type

03	D15	**80**

Spool variants

04	2/2 normally open proportional P to T, controlled side a	**03P**

Nominal flow [1]

05	12 l/min (3.2 gpm)	**1**
	18 l/min (4.75 gpm)	**2**
	25 l/min (6.6 gpm)	**3**

Voltage supply		**07**	**03**	**01**	**00**	
06	Without coil	–	–	–	●	**00**
	12V DC	●	●	●	–	**OB**
	24V DC	●	●	●	–	**OC**

Electric connections

07	Without coils	**00**
	With coils, without mating connector DIN EN 175301-803	**01** [2]
	With coils, with bi-directional diode, without mating connector vertical Amp-Junior	**03**
	With coils, with bi-directional diode, without mating connector DT04-2P	**07**

Options

08	No options	**No code**
	Push-button type manual override	**0P**
	Screw type manual override	**0F**
	Lever type manual override [3]	**_ _**

● = Available – = Not available

Symbols

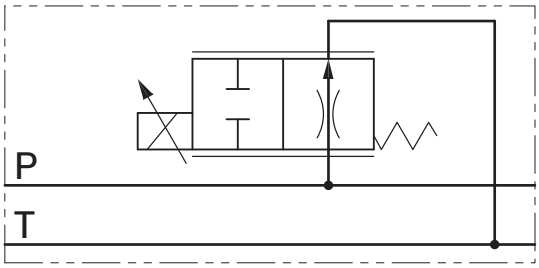

1) With ΔP (P > T) 10 bar (145 psi).
2) For connectors ordering code see data sheet RE 18325-90.
3) As lever type manual override a choice of options is available and each one implies a specific ordering code (refer to page 7).

Example of application

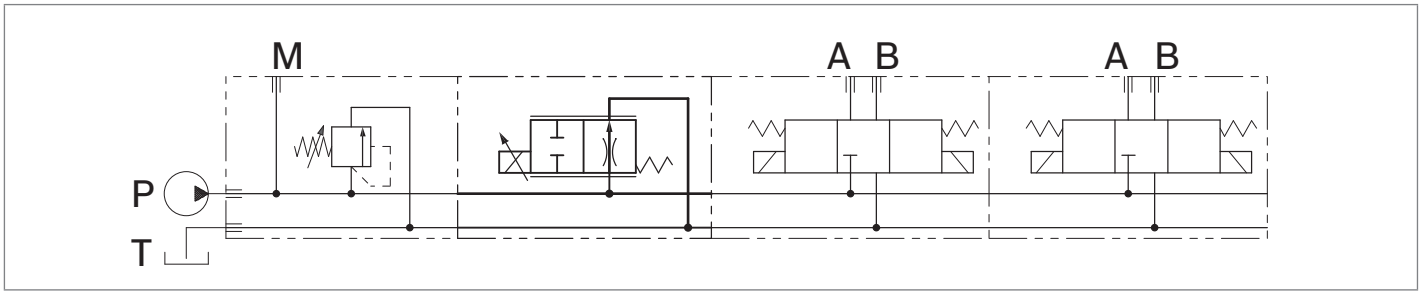

Functional description

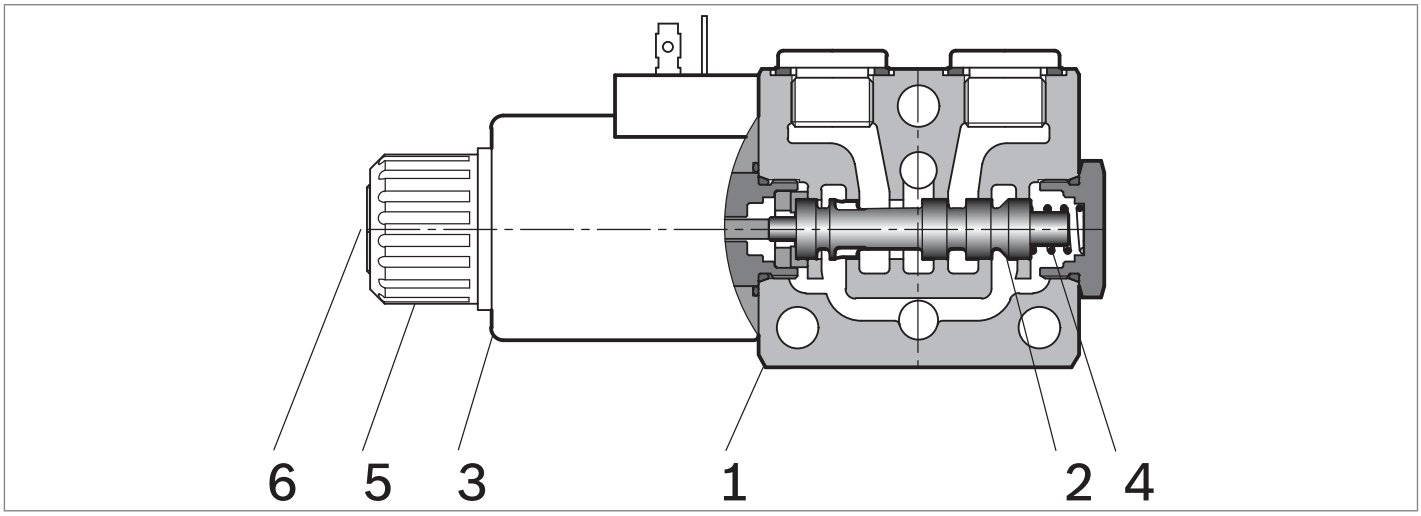

The sandwich plate design valve elements L808003P... are compact direct operated proportional solenoid valves which divert totally or partially the inlet P flow to Tank.
These elements basically consist of a stackable housing (**1**) with a control spool (**2**), one solenoid (**3**), and one return spring (**4**).
With the solenoid de-energized, the return spring (**4**) keeps the spool (**2**) in its rest position “0” and all the inlet P flow passes through the valve and is unloaded to Tank. When energized by the electronic feed regulator, the solenoid (**3**) displaces the control spool (**2**) from its rest position proportionally to the current received and proportionally restricts the flow area to Tank. A regulated, non pressure compensated, oil flow is diverted from P to T and the remaining amount of inlet flow in the P line remains available for the downstream operators.
The coil (**3**) is fastened to the solenoid tube by a ring nut (**5**).
A pin (**6**) allows to push the spool (**2**) in emergency conditions, when the solenoid cannot be energized, like in case of voltage shortage.

Technical data

General			
Valve element with 1 solenoid, pins EN175301-803		kg (lbs)	1.7 (3.75)
Ambient Temperature		°C (°F)	–20....+50 (-4....+122) (NBR seals)
Hydraulic			
Maximum pressure at P		bar (psi)	310 (4500)
Maximum inlet flow		l/min (gpm)	28 (7.4)
Hydraulic fluid General properties: it must have physical lubricating and chemical properties suitable for use in hydraulic systems such as, for example:			Mineral oil based hydraulic fluids HL (DIN 51524 part 1). Mineral oil based hydraulic fluids HLP (DIN 51524 part 2). For use of environmentally acceptable fluids (vegetable or polyglycol base) please consult us.
Fluid Temperature		°C (°F)	–20....+80 (-4....+176) (NBR seals)
Permissible degree of fluid contamination			ISO 4572: $\beta_x \geq 75$ X=10...12 ISO 4406: class 19/17/14 NAS 1638: class 8
Viscosity range		mm^2/s	20....380 (optimal 30....46)
Electrical			
Voltage type		PWM	120 Hz
Voltage tolerance (nominal voltage)		%	-10 .... +10
Duty			Continuous, with ambient temperature ≤ 50°C (122°F)
Coil wire temperature not to be exceeded		°C (°F)	150 (302)
Insulation class			H
Compliance with			Low Voltage Directive LVD 73/23/EC (2006/95/EC), 2004/108/EC
Coil weight		kg (lbs)	0.335 (0.732)
Voltage		V	12 24
Nominal 100% current		A	1.76 0.88
Coil resistance (nominal at 20°C (68°F))	- Cold value	Ω	4 16
	- Max. hot value	Ω	6.1 24.4

Note
For applications with different specifications consult us

Code	Voltage [V]	Connector type	Coil description	Marking	Coil Mat no.
OB 01	12 DC	EN 175301-803 (Ex. DIN 43650)	D15 01	12 DC	R933000092
OB 03	12 DC	AMP JUNIOR	D1530	12 DC	R933002877
OB 07	12 DC	DEUTSCH DT 04-2P	D15 07	12 DC	R933000094
OC 01	24 DC	EN 175301-803 (Ex. DIN 43650)	D15 01	24 DC	R933000093
OC 03	24 DC	AMP JUNIOR	D1530	24 DC	R933003515
OC 07	24 DC	DEUTSCH DT 04-2P	D15 07	24 DC	R933002798

Characteristic curves

P -> T, vs %A = Percentage of the maximum current supplied to the coil

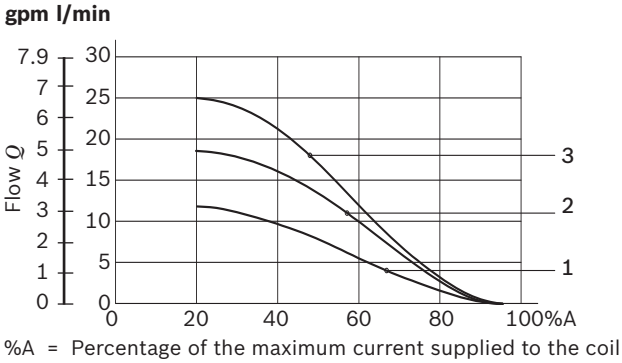

Curve no.	Nominal Flow With Δp (P > T) 10bar (145psi)	Max flow	Max pressure at P
1	12 l/min (3.17gpm)	14 l/min (3.7gpm)	310 bar (4500psi)
2	18 l/min (4.75gpm)	20 l/min (5.3gpm)	310 bar (4500psi)
3	25 l/min (6.6 gpm)	28 l/min (7.4gpm)	310 bar (4500psi)

Pressure Drop

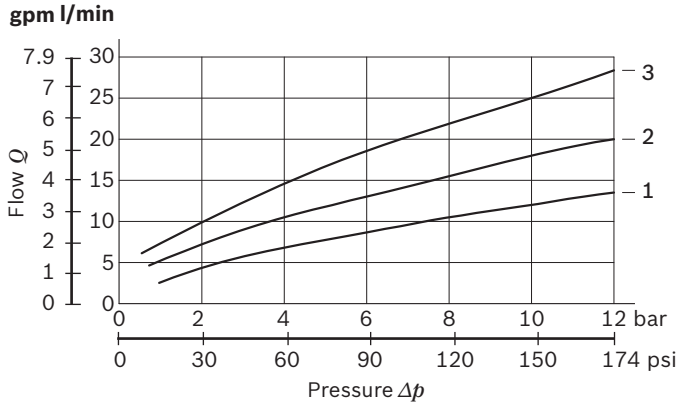

Curve no.	Nominal Flow With Δp (P > T) 10bar (145psi)	Max flow	Max pressure at P
1	12 l/min (3.17gpm)	14 l/min (3.7gpm)	310 bar (4500psi)
2	18 l/min (4.75gpm)	20 l/min (5.3gpm)	310 bar (4500psi)
3	25 l/min (6.6 gpm)	28 l/min (7.4gpm)	310 bar (4500psi)

2

External dimensions and fittings

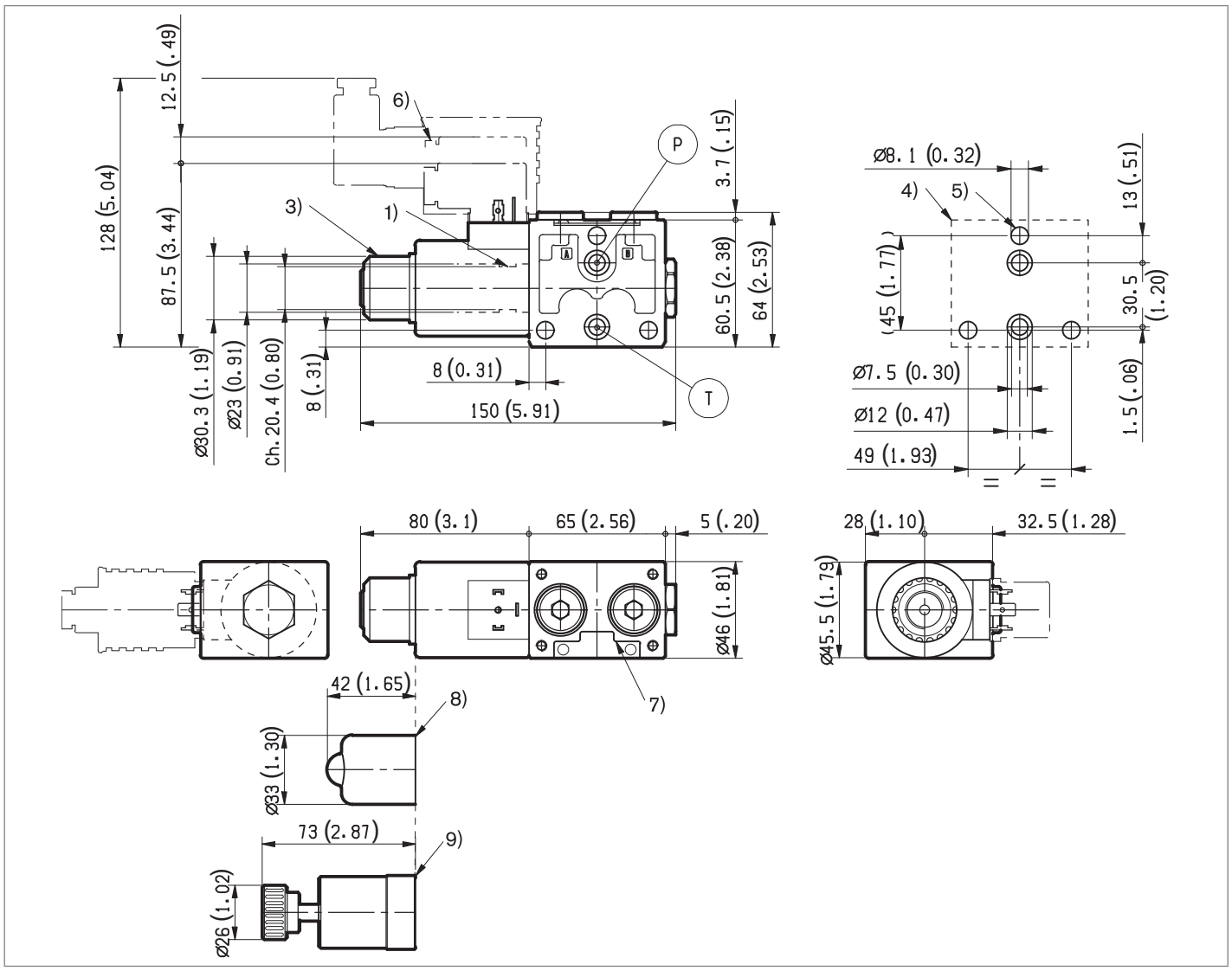

1 Solenoid tube Ø 23 (0.9 inch).
3 Ring nut for coil locking (Ø 30.3 mm (1.18 Inch));
torque 6–7 Nm (4.4 – 5.2 ft-lb).
4 Flange specifications for coupling to ED intermediate elements.
5 For tie rod and tightening torque information see data sheet RE 18301-90.
6 Clearance needed for connector removal.
7 Identification label.
8 Optional push-button manual override, 0P type, for spool opening:
it is pressure stuck to the ring nut for coil locking.
Mat no. R933003289.
9 Optional screw type manual override, 0F type, for spool opening:
it is screwed (torque 6-7 Nm (4.4-5.2 ft-lb)) to the tube as replacement of the coil ring nut. Mat no. R933003116.

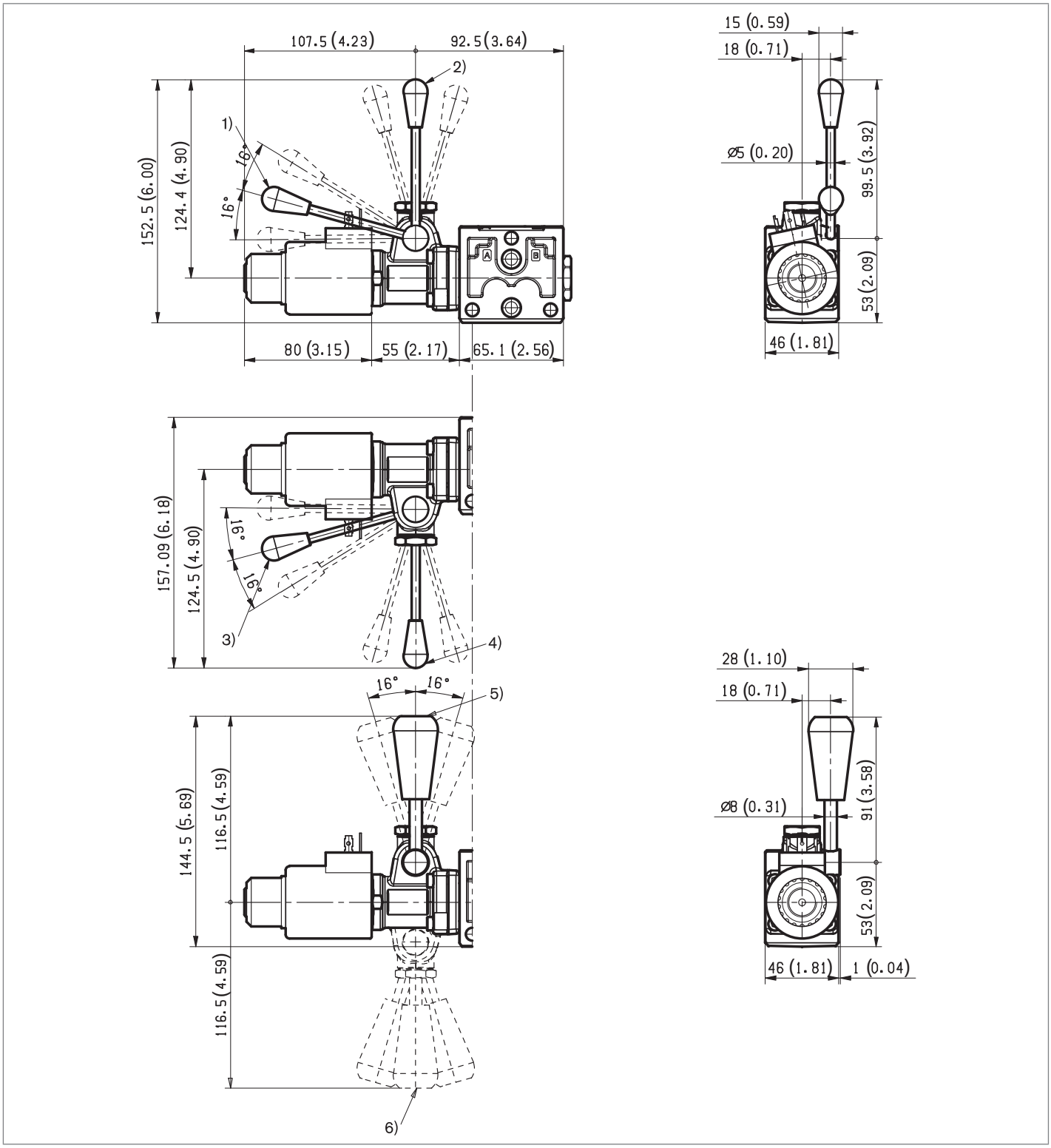

1 Ordering Details: HA (if fitted to side A) or HB (if fitted to side B)
2 Ordering Details: VA (if fitted to side A) or VB (if fitted to side B)
3 Ordering Details: H1 (if fitted to side A) or H9 (if fitted to side B)
4 Ordering Details: V1 (if fitted to side A) or V9 (if fitted to side B)
5 Ordering Details: XA (if fitted to side A) or XB (if fitted to side B)
6 Ordering Details: X1 (if fitted to side A) or X9 (if fitted to side B)

RE 1 1 3 0 . 0 4 / 0 2 . 2 0 1 2 Bosch Rexroth AG

Electric connection

01 Protection class: IP 65 when connector with seal is properly screwed down.

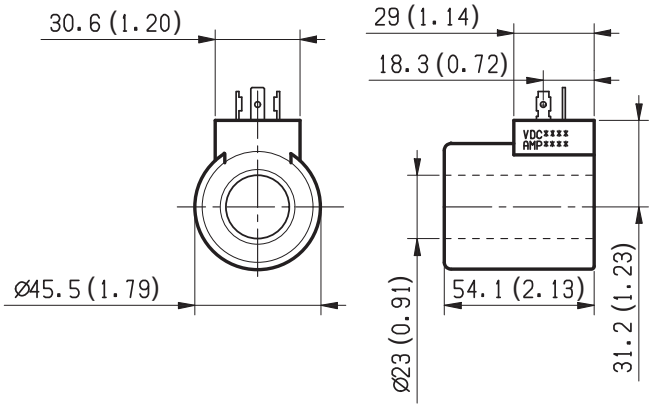

03 Protection class: IP 65 with female connector properly fitted (see drawing).

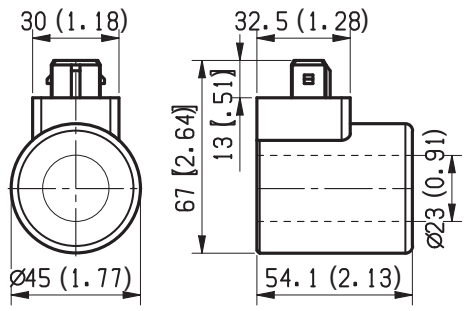

07 Protection class: IP 69 K with female connector properly fitted.

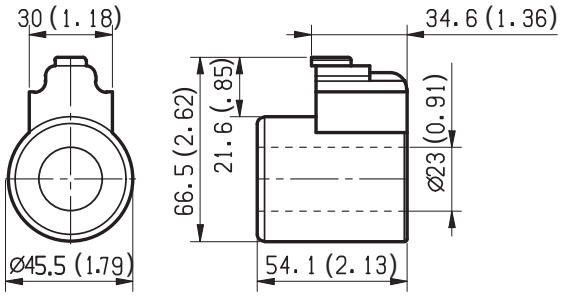

Electronic feed regulator

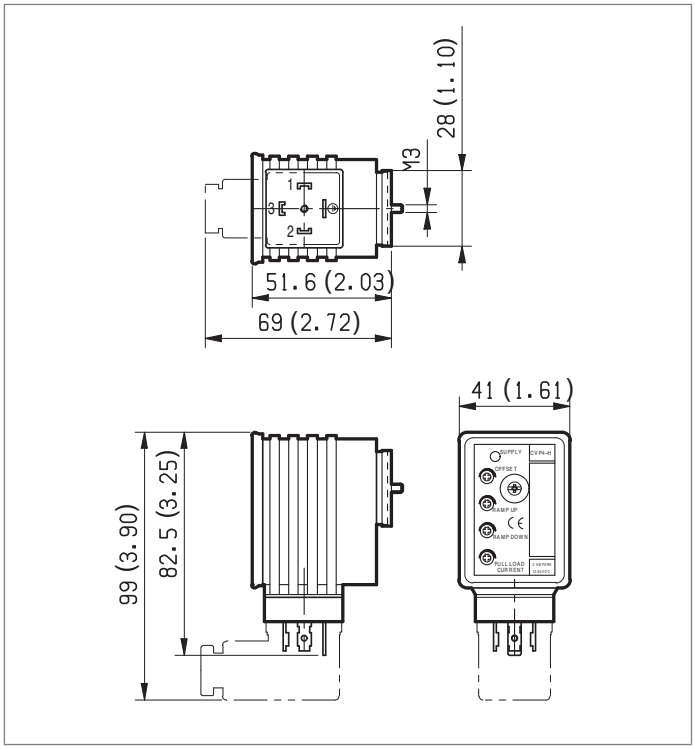

Supply: yellow LED, lit up with power ON.
Off Set: minimum current adjustment. Adjust solenoid current so that the desired minimum value is obtained. Clockwise rotation increases current.
Ramp up: Ramping up time adjustment.
Ramp down: Ramping down time adjustment.
For longer ramping times, turn potentiometers clockwise; for shorter ramping times, turn the potentiometers counter-clockwise.
Full load current: Maximum current adjustment. Adjust solenoid current so that the desired maximum value is obtained (up to 2A). Clockwise rotation increases current.
Frequency adjustment: it is possible to set the PWM frequency obtaining the desired control sensitivity. After removing the external plastic cover, turn the adjusting screw; clockwise rotation increases frequency from 100 to 500 Hz.

Electronic feed regulator	
Regulator ordering code	R933003290
Supply voltage	12-30 VDC
Control Signal	0-10 VDC
Max. output current	2 A
Minimum output current	0....0.6 A
Ramp adjustment up/down	0.1....10 s
PWM Frequency adjustment (pre-set 120 Hz)	100....500 Hz
Ambient operating temperature	-10....+60 °C *(14....+140 °F)*
Weight	0.12 kg *(26.4 lbs)*
Electromagnetic compatibility	EN50081-1/2EN61000-4-2/3/4/5/6
Potentiometer resistance	5....10 κ Ω

Directional valve elements with compensated proportional control of Tank unloaded excess flow

L808003C... (ED4-PTC)

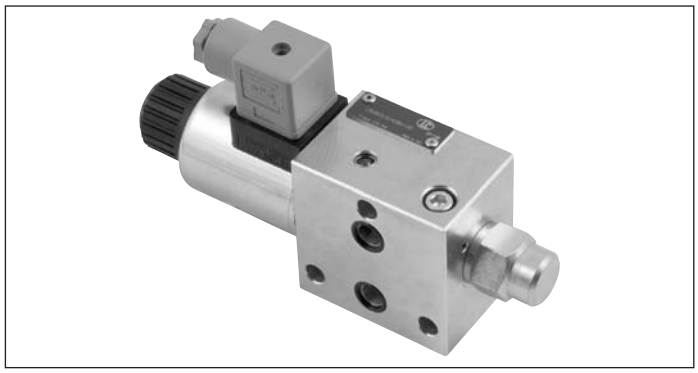

Size 6
Series 00
Maximum operating pressure 250 bar (3625 psi)
Maximum flow 40 l/min (10.6 gpm)

General specifications

Valve element with direct proportional pressure compensated control of inlet, P line, flow.
Three way pressure compensator included.
Wet pin proportional tube for removable DC coil.
In the de-energized condition, the control spool is held in normal position by return spring.
Solenoid tube with push rod for mechanical override; nickel plated surface.
Manual override (push-button, screw type) available as option.
Plug-in connectors available: EN 175301-803 (Was DIN 43650) and DT04-2P (Deutsch).

Contents

Ordering details	2
Symbols	2
Example of application	3
Functional description	3
Technical data	4
Characteristic curves	5
External dimensions and fittings	6
Electric connection	7
Electronic feed regulator	8

RF 1080 - 05/02 2010, Bosch Rexroth AG

Ordering details

01	02	03	04	05	06	07		08
L	**80**	**80**	**03**				**00**	

Family

01	Directional Valve elements ED	**L**

Type

02	Size 6 proportional	**80**

Coil type

03	D15	**80**

Spool variants

04	Proportional pressure compensated flow control	**03**

Nominal flow [1]

05	10 l/min (2.6 gpm)vw	**C2**
	20 l/min (5.3 gpm)	**C4**
	30 l/min (7.9 gpm)	**C6**
	40 l/min (10.6 gpm)	**C8**
	50 l/min (12.9 gpm)	**C9**

Voltage supply

		07	03	01	00	
06	Without coil	–	–	–	●	**00**
	12V DC	●	●	●	–	**OB**
	24V DC	●	●	●	–	**OC**

Electric connections

07	Without coils	**00**
	With coils, without mating connector DIN EN 175301-803	**01** [2]
	With coils, with bi-directional diode, without mating connector vertical Amp-Junior	**03**
	With coils, with bi-directional diode, without mating connector DT04-2P	**07**

Options

08	No options	**No code**
	Push-button type manual override	**0P**
	Screw type manual override	**0F**
	Lever type manual override [3]	**_ _**

● = Available – = Not available

Symbols

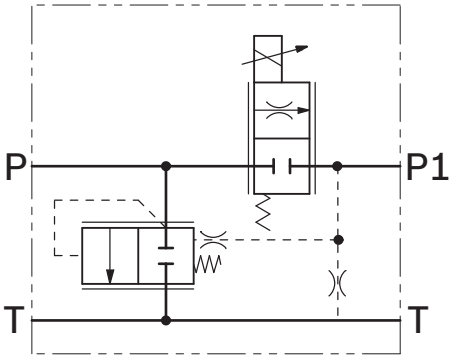

1) With ΔP (P > T) 10 bar (145 psi).
2) For connectors ordering code see data sheet RE 18325-90.
3) As lever type manual override a choice of options is available and each one implies a specific ordering code (refer to page 7).

Example of application

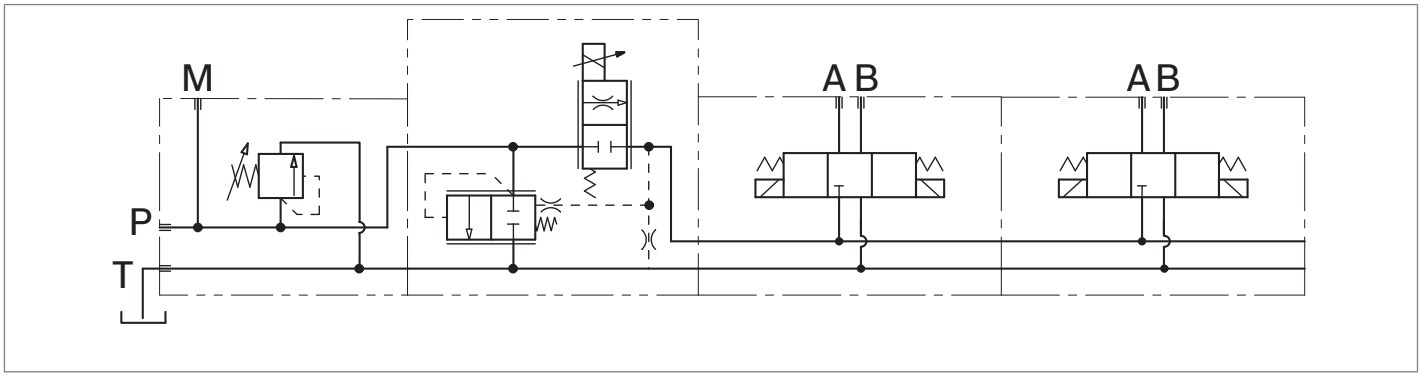

Functional description

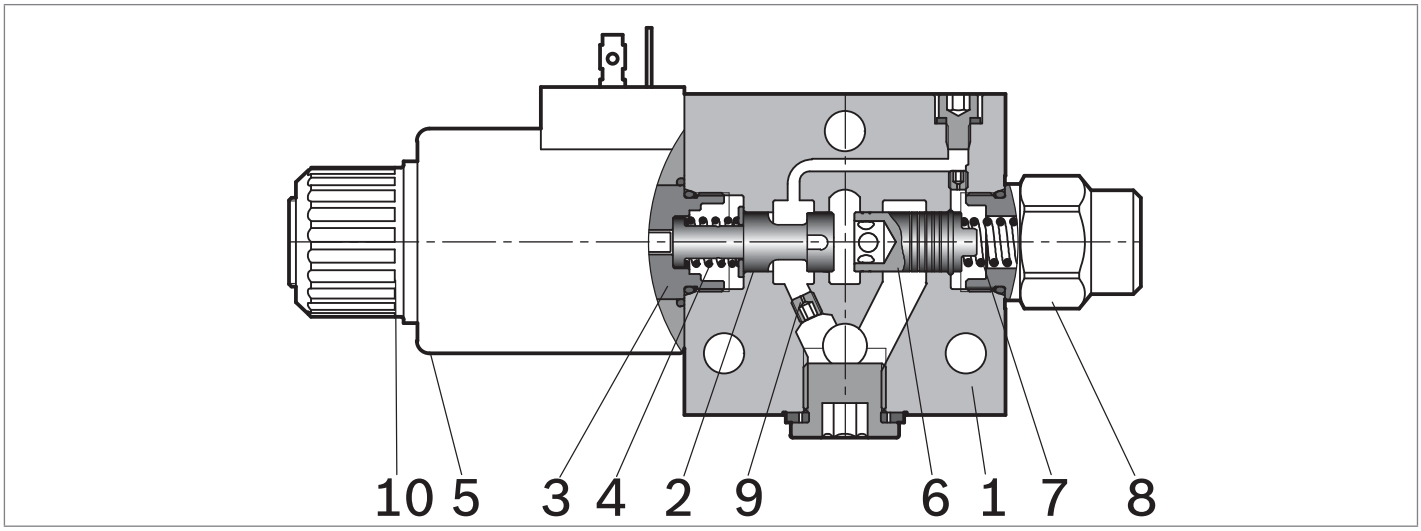

The sandwich plate design elements L808003C... are 3 way proportional pressure compensated direct solenoid operated valves. They control the inlet (P) flow and allow through (out of P1) only the flow required by the downstream operators; the excess oil, pressurized at working pressure, is diverted from the inlet P line to Tank.
The combination of the proportional regulator with the unloading compensator guarantees stable and constant flow, independently from the working pressure.
The proportional control is achieved by a wet pin proportional screwed-in tube, with removable coil which is energized by an external electronic feed regulator; the electronic regulator performs an “open loop” control of the current supplied to the coil.
These elements basically consist of a stackable housing (**1**) with a control spool (**2**), a solenoid (**3**), and one return spring (**4**); additionally there is a compensator (**6**), with a preset spring (**7**), a spring retainer plug (**8**) and a drain orifice (**9**). A coil (**5**) is held to the solenoid tube by the ring nut (**10**).
With the solenoid de-energized, the spool stays in the closed position; the pressure overcomes the compensator spring (**7**) and the inlet (P) oil is unloaded to Tank at the Δp value shown by the characteristic curve. Pressure at (P1) is drained to Tank through the orifice and drops to zero.
By energizing the solenoid (**3**) through the electronic feed regulator, the control spool (**2**) is displaced from its rest position proportionally to the current; the corresponding opening allows a pressure compensated flow to proceed to P1, while the excess flow is diverted to Tank.

With the solenoid (**3**) de-energized, the return spring (**4**) pushes the spool (**2**) to its rest position “0” fully closed. No flow goes to P1 and any residual pressure at P1 is drained through the orifice. The compensator (**6**) is pushed fully open all the oil is unloaded to Tank.

Technical data

General			
Valve element with 1 solenoid, pins EN175301-803		kg (lbs)	1.53 (3.37)
Ambient Temperature		°C (°F)	–20....+50 (-4....+122) (NBR seals)
Hydraulic			
Maximum pressure at P		bar (psi)	250 (3625)
Maximum flow rated at P1		l/min (gpm)	40 (10.6)
Maximum inlet flow		l/min (gpm)	50 (13.2)
Hydraulic fluid General properties: it must have physical lubricating and chemical properties suitable for use in hydraulic systems such as, for example:			Mineral oil based hydraulic fluids HL (DIN 51524 part 1). Mineral oil based hydraulic fluids HLP (DIN 51524 part 2). For use of environmentally acceptable fluids (vegetable or polyglycol base) please consult us.
Fluid Temperature		°C (°F)	–20....+80 (-4....+176) (NBR seals)
Permissible degree of fluid contamination			ISO 4572: $\beta_x \geq 75$ X=10...12 ISO 4406: class 19/17/14 NAS 1638: class 8
Viscosity range		mm^2/s	20....380 (optimal 30....46)
Electrical			
Voltage type		PWM	120 Hz
Voltage tolerance (nominal voltage)		%	-10 .... +10
Duty			Continuous, with ambient temperature ≤ 50°C (122°F)
Coil wire temperature not to be exceeded		°C (°F)	150 (302)
Insulation class			H
Compliance with			Low Voltage Directive LVD 73/23/EC (2006/95/EC), 2004/108/EC
Coil weight		kg (lbs)	0.335 (0.732)
Voltage		V	12 24
Nominal 100% current		A	1.76 0.88
Coil resistance (nominal at 20°C (68°F))	- Cold value	Ω	4 16
	- Max. hot value	Ω	6.1 24.4

Note
For applications with different specifications consult us

Code	Voltage [V]	Connector type	Coil description	Marking	Coil Mat no.
OB 01	12 DC	EN 175301-803 (Ex. DIN 43650)	D15 01	12 DC	R933000092
OB 03	12 DC	AMP JUNIOR	D1530	12 DC	R933002877
OB 07	12 DC	DEUTSCH DT 04-2P	D15 07	12 DC	R933000094
OC 01	24 DC	EN 175301-803 (Ex. DIN 43650)	D15 01	24 DC	R933000093
OC 03	24 DC	AMP JUNIOR	D1530	24 DC	R933003515
OC 07	24 DC	DEUTSCH DT 04-2P	D15 07	24 DC	R933002798

Characteristic curves

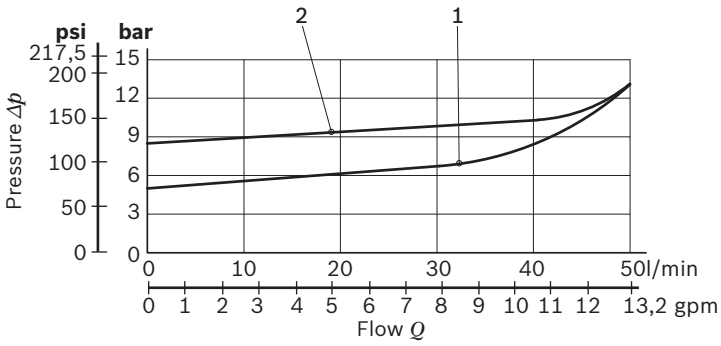

Curve no.	Nominal flow
1	C2 - C4 - C6
2	C8 - C9

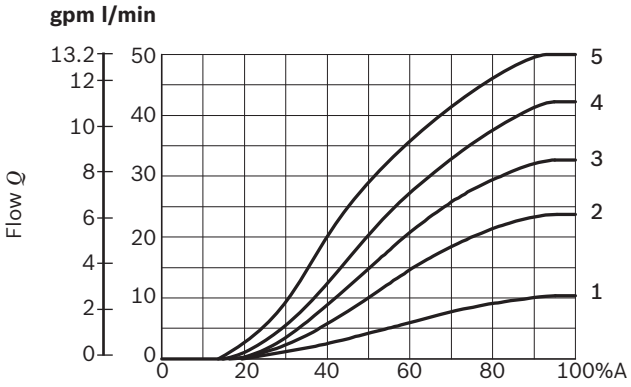

Curve no.	Nominal flow
1	C2
2	C4
3	C6
4	C8
5	C9

%A = Percentage of the maximum current supplied to the coil

Compensated flow curves

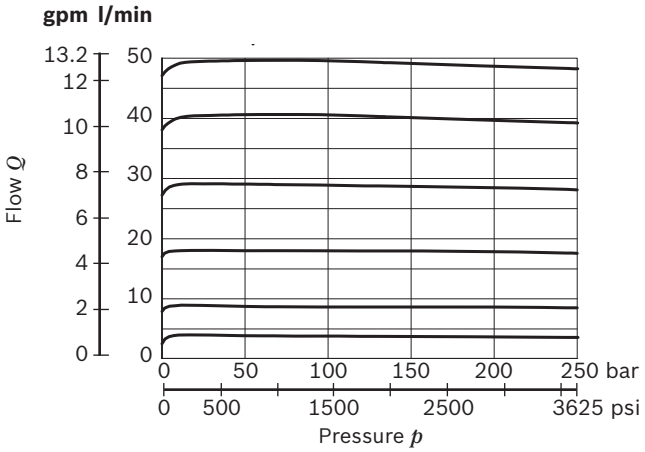

Drain to tank

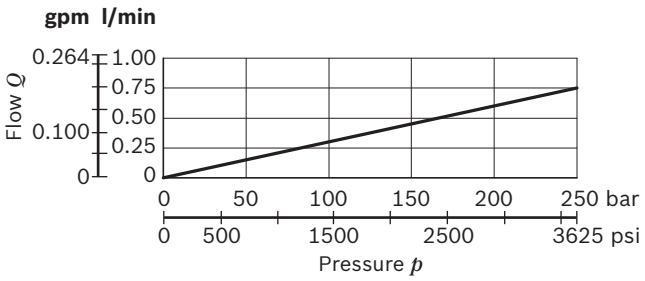

External dimensions and fittings

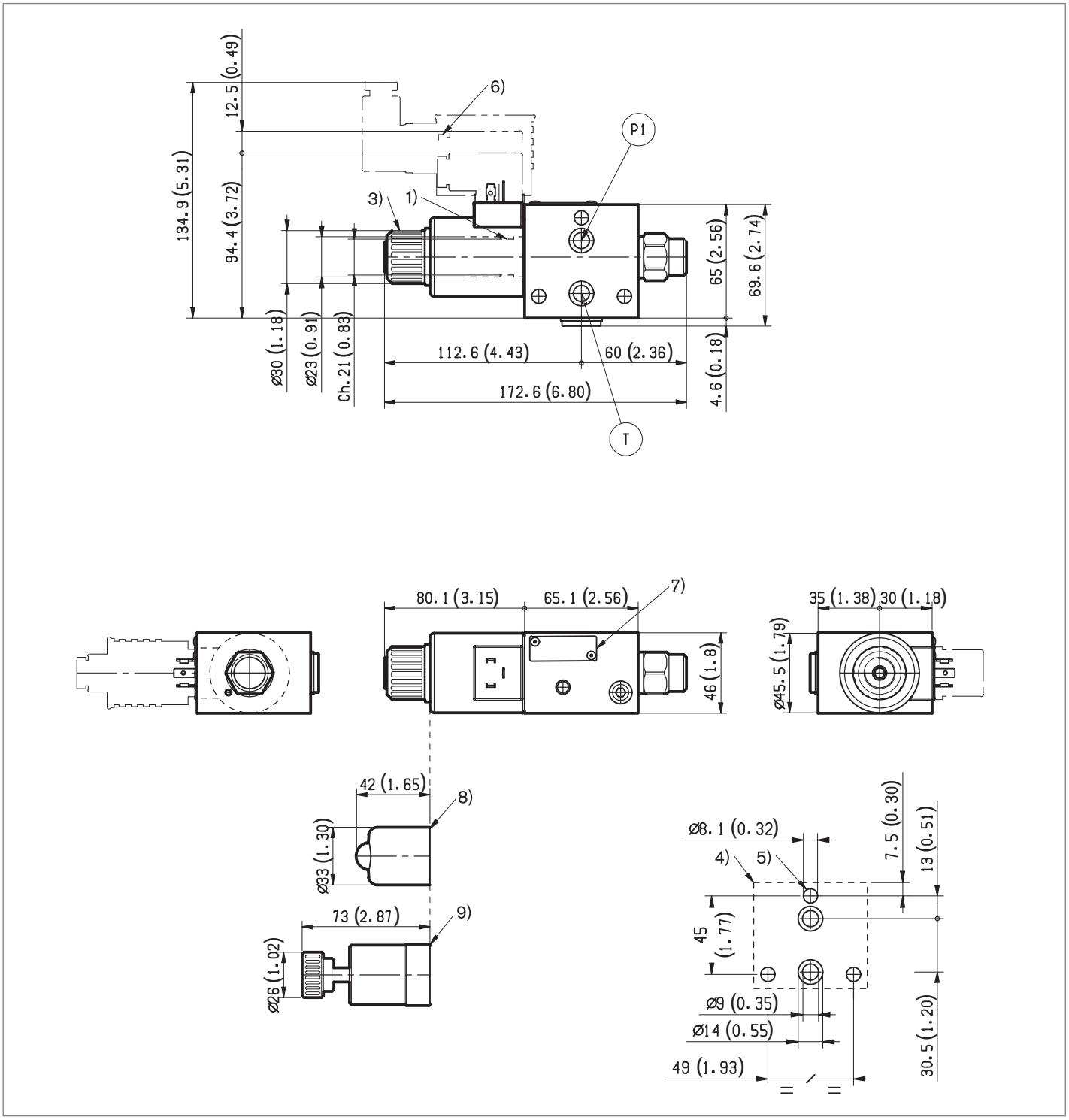

1 Solenoid tube Ø 23 (0.9 inch).
3 Ring nut for coil locking (Ø 30.3 mm (1.18 inch)); torque 6–7 Nm (4.4 – 5.2 ft-lb).
4 Flange specifications for coupling to ED intermediate elements.
5 For tie rod and tightening torque information see data sheet RE 18301-90.
6 Clearance needed for connector removal.
7 Identification label.
8 Optional push-button manual override, 0P type, for spool opening: it is pressure stuck to the ring nut for coil locking. Mat no. R933003289.
9 Optional screw type manual override, 0F type, for spool opening: it is screwed (torque 6-7 (4.4-5.2 ft-lb)) to the tube as replacement of the coil ring nut. Mat no. R933003116.

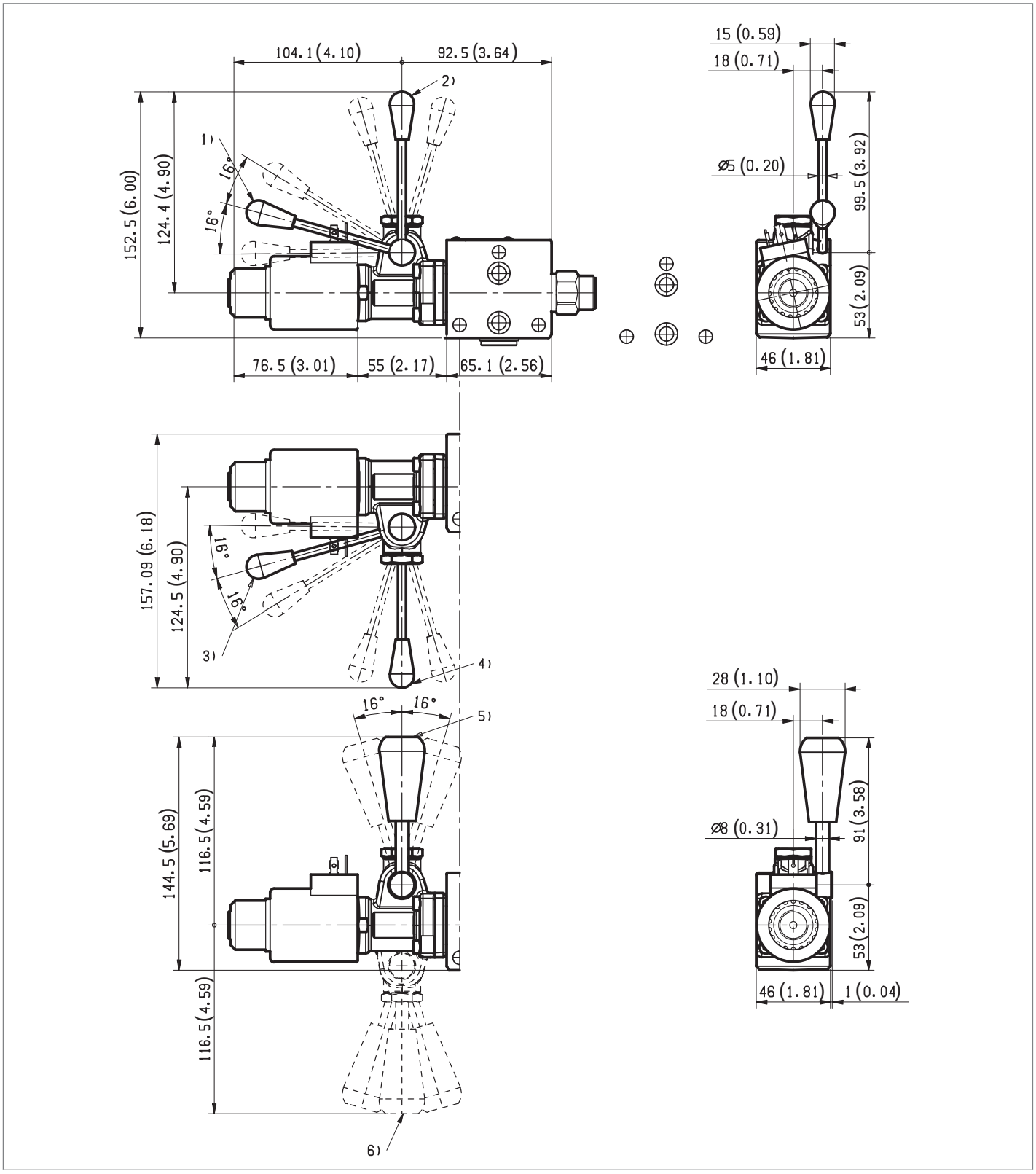

1 Ordering Details: HA (if fitted to side A) or HB (if fitted to side B)
2 Ordering Details: VA (if fitted to side A) or VB (if fitted to side B)
3 Ordering Details: H1 (if fitted to side A) or H9 (if fitted to side B)
4 Ordering Details: V1 (if fitted to side A) or V9 (if fitted to side B)
5 Ordering Details: XA (if fitted to side A) or XB (if fitted to side B)
6 Ordering Details: X1 (if fitted to side A) or X9 (if fitted to side B)

Electric connection

01 Protection class: IP 65 when connector with seal is properly screwed down.

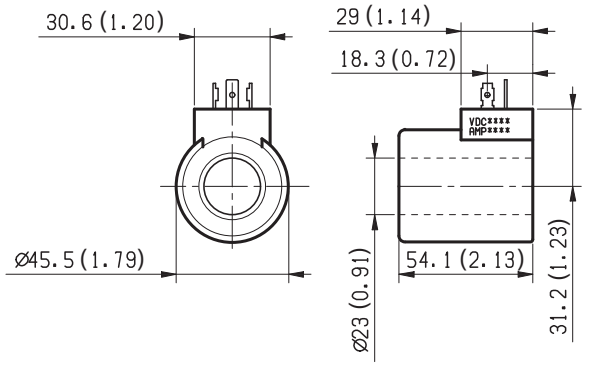

03 Protection class: IP 65 with female connector properly fitted (see drawing).

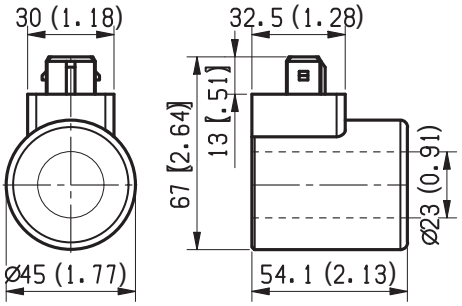

07 Protection class: IP 69 K with female connector properly fitted.

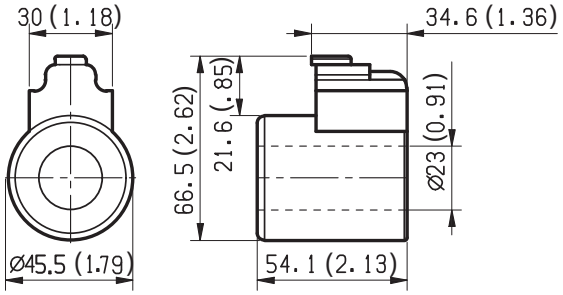

Electronic feed regulator

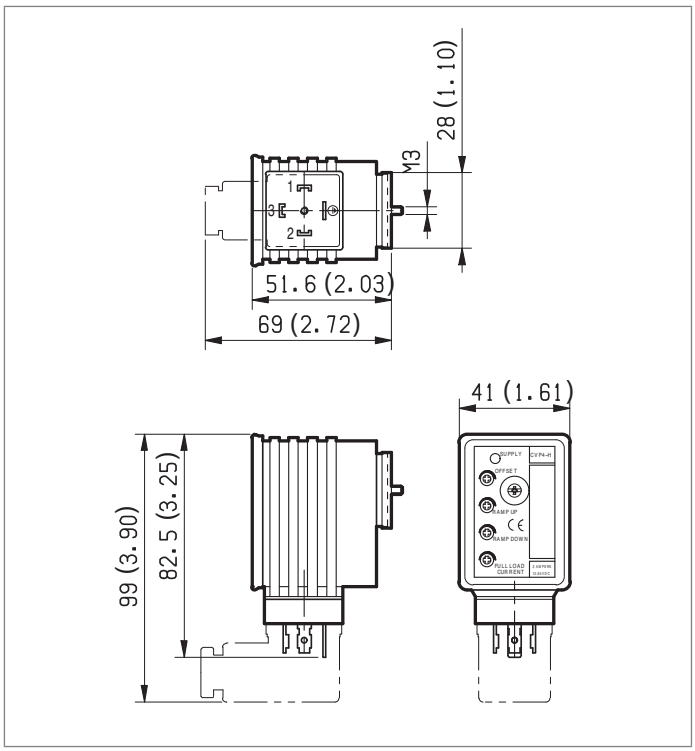

Supply: yellow LED, lit up with power ON.
Off Set: minimum current adjustment. Adjust solenoid current so that the desired minimum value is obtained. Clockwise rotation increases current.
Ramp up: Ramping up time adjustment.
Ramp down: Ramping down time adjustment.
For longer ramping times, turn potentiometers clockwise; for shorter ramping times, turn the potentiometers counter-clockwise.
Full load current: Maximum current adjustment. Adjust solenoid current so that the desired maximum value is obtained (up to 2A). Clockwise rotation increases current.
Frequency adjustment: it is possible to set the PWM frequency obtaining the desired control sensitivity. After removing the external plastic cover, turn the adjusting screw; clockwise rotation increases frequency from 100 to 500 Hz.

Electronic feed regulator	
Regulator ordering code	R933003290
Supply voltage	12-30 VDC
Control Signal	0-10 VDC
Max. output current	2 A
Minimum output current	0....0.6 A
Ramp adjustment up/down	0.1....10 s
PWM Frequency adjustment (pre-set 120 Hz)	100....500 Hz
Ambient operating temperature	-10....+60 °C *(14....+140 °F)*
Weight	0.12 kg *(26.4 lbs)*
Electromagnetic compatibility	EN50081-1/2EN61000-4-2/3/4/5/6
Potentiometer resistance	5....10 κ Ω

4/3 - 4/2 Directional valve elements with proportional control and with or without LS connections

L8_80... (ED4-P)

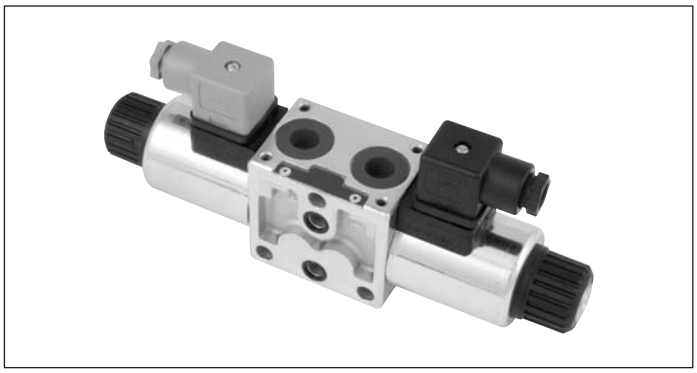

Size 6
Series 00
Maximum operating pressure 310 bar (4500 psi)
Maximum flow 40 l/min (10.5 gpm)
Port connections G 3/8 - G 1/2 - SAE6 - SAE8

General specifications

Valve element with direct proportional control of spool.
Control spool operated by solenoid with removable coils.
In the de-energized condition, the control spool is held in the central position by return springs.
Wet pin proportional tubes for DC coils, with push rod for mechanical override; nickel plated surface.
Manual override (push-button or screw type) available as option.
Plug-in connectors available: EN 175301-803 (Was DIN 43650) and DT04-2P (Deutsch).

Contents

Ordering details	2
Symbols	2
Functional description	3
Technical data	4
Characteristic curves	5
External dimensions and fittings	6
Electric connection	8
Electronic feed regulator	9

RF 1030 - 06/02 2010, Bosch Rexroth AG

Ordering details

01	02	03	04	05	06	07	08	09	10		11
L	**8**		**80**		**S**					**00**	

Family

01	Directional Valve elements ED	**L**

Type

02	Size 6 proportional	**8**

Configuration

03	Standard	**0**
	With Load Sensing control	**4**

Coil type

04	D15	**80**

Spool variants

05	4/3 operated both sides a and b; P – T closed in neutral	**B2**
	4/2 operated on side a only; P – T closed in neutral	**B3**
	4/2 operated on side b only; P – T closed in neutral	**B4**
	4/3 operated on both sides a and b; A and B to T in neutral	**E2**
	4/2 operated on side a only; A and B to T in neutral	**E3**
	4/2 operated on side b only; A and B to T in neutral	**E4**

Flow pattern

06	Both meter in and out	**S**
	Meter in	**I**

Nominal flow [1)]

07	10 l/min (2.64 gpm)	**2**
	20 l/min (5.28 gpm)	**4**
	30 l/min (7.9 gpm)	**6**

Voltage supply		**07**	**03**	**01**	**00**	
08	Without coil	–	–	–	●	**00**
	12V DC	●	●	●	–	**OB**
	24V DC	●	●	●	–	**OC**

Electric connections

09	Without coils	**00**
	With coils, without mating connector DIN EN 175301-803	**01** [2)]
	With coils, with bi-directional diode, without mating connector vertical Amp-Junior	**03**
	With coils, with bi-directional diode, without mating connector DT04-2P	**07**

Ports

10	G 3/8 DIN 3852	**0**
	9/16-18 UNF 2-B (SAE6)	**1**
	G 1/2 DIN 3852	**2**
	3/4-16 UNF 2-B (SAE8)	**3**

Options

11	No options	**No code**
	Push-button type manual override	**0P**
	Screw type manual override	**0F**
	Lever type manual override [3)]	**_ _**

● = Available – = Not available

1) With Δp (P > T) 10 bar (145 psi), corresponding approx. to Δp P>A,B 5 bar (73 psi).
2) For connectors ordering code see data sheet RE 18325-90.
3) Each different option for the type of manual override chosen implies a specific ordering code (refer to page 7).

Symbols

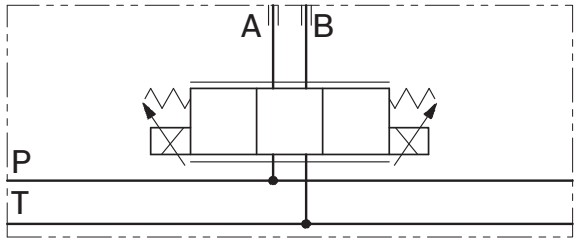

= 0

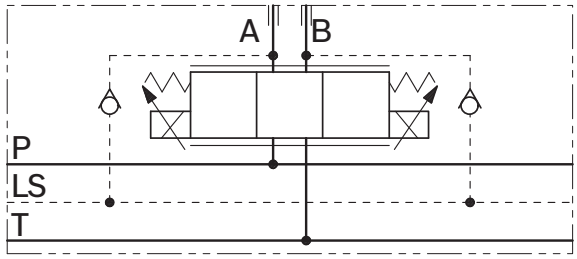

= 4

Spool variants

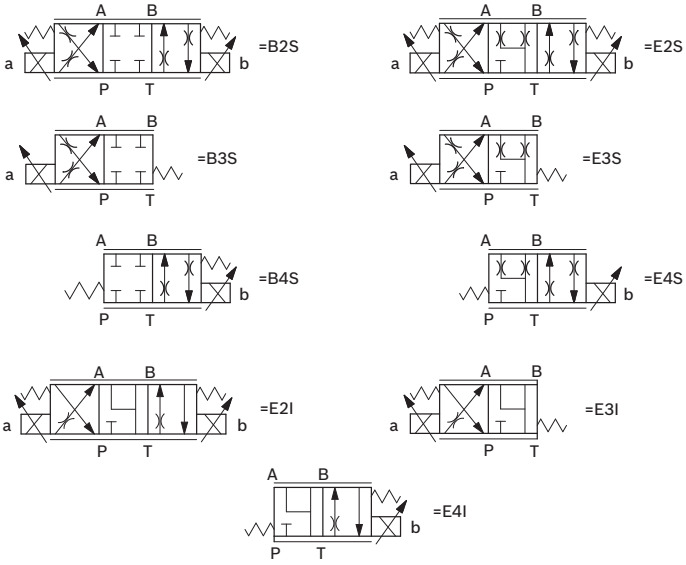

In neutal position, the valves cross section are as follows:
E_I ≥ 20% of nominal cross section.
E_S ≥ 2% of nominal cross section.

Functional description

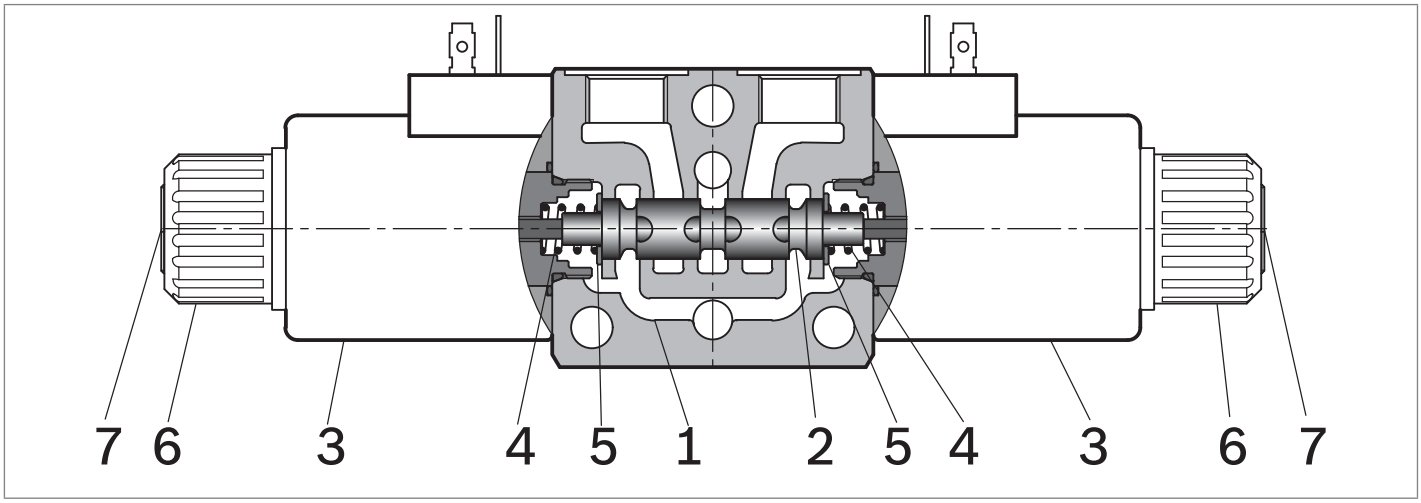

The sandwich plate design directional valve elements L8080... are compact direct operated proportional solenoid valves which control the start, the stop, the direction and the quantity of the oil flow. These elements basically consist of a stackable housing (**1**) with a control spool (**2**), one or two solenoids (**3**), and one or two return springs (**4**).
Energized by an electronic feed regulator, each solenoid (**3**) displaces the control spool (**2**) from its neutral-central position “0” proportionally to the current received; a regulated oil flow P to A, or P to B, is achieved. Once the solenoid is de-energized, the return spring (**4**) pushes the spool thrust washer (**5**) back against the housing and the spool returns in its neutral-central position.
Each coil (**3**) is fastened to the solenoid tube by a ring nut (**6**). A pin (**7**) allows to push the spool (**2**) in emergency conditions, when the solenoid cannot be energized, like in case of voltage shortage.

Technical data

General			
Valve element with 2 solenoids		kg (lbs)	2.20 (4.85)
Valve element with 1 solenoid		kg (lbs)	1.70 (3.75)
Ambient Temperature		°C (°F)	–20....+50 (-4....+122) (NBR seals)
Hydraulic			
Maximum pressure at P		bar (psi)	310 (4500)
Maximum pressure at T		bar (psi)	210 (3050)
Maximum inlet flow		l/min (gpm)	40 (10.5)
Nominal flow with DP P>T = 10 bar (145 psi)		l/min (gpm)	10, 20, 30, 40 (2.64, 5.28, 7.9, 10.5)
Hydraulic fluid General properties: it must have physical lubricating and chemical properties suitable for use in hydraulic systems such as, for example:			Mineral oil based hydraulic fluids HL (DIN 51524 part 1). Mineral oil based hydraulic fluids HLP (DIN 51524 part 2). For use of environmentally acceptable fluids (vegetable or polyglycol base) please consult us.
Fluid Temperature		°C (°F)	–20....+80 (-4....+176) (NBR seals)
Permissible degree of fluid contamination			ISO 4572: $\beta_x \geq 75$ X=10...12 ISO 4406: class 19/17/14 NAS 1638: class 8
Viscosity range		mm^2/s	20....380 (optimal 30....46)
Electrical			
Voltage type		PWM	120 Hz
Voltage tolerance (nominal voltage)		%	-10 .... +10
Duty			Continuous, with ambient temperature ≤ 50°C (122°F)
Coil wire temperature not to be exceeded		°C (°F)	150 (302)
Insulation class			H
Compliance with			Low Voltage Directive LVD 73/23/EC (2006/95/EC), 2004/108/EC
Coil weight		kg (lbs)	0.335 (0.739)
Voltage		V	12 24
Nominal 100% current		A	1.76 0.88
Coil resistance (nominal at 20°C (68°F))	- Cold value	Ω	4 16
	- Max. hot value	Ω	6.1 24.4
Electronic control			
Electronic feed regulators [1]			Upon request

1) An electronic, open loop type, regulator with plug-in pins EN 175301-803 is available and can be fitted onto the solenoid directly. For valve elements with two solenoids, two electronic regulators are needed (refer to page 9).

Note
For applications with different specifications consult us

Code	Voltage [V]	Connector type	Coil description	Marking	Coil Mat no.
=OB 01	12 DC	EN 175301-803 (Ex. DIN 43650)	D15 01	12 DC	R933000092
=OB 03	12 DC	AMP JUNIOR	D1530	12 DC	R933002877
=OB 07	12 DC	DEUTSCH DT 04-2P	D15 07	12 DC	R933000094
=OC 01	24 DC	EN 175301-803 (Ex. DIN 43650)	D15 01	24 DC	R933000093
=OC 03	24 DC	AMP JUNIOR	D1530	24 DC	R933003515
=OC 07	12 DC	DEUTSCH DT 04-2P	D15 07	12 DC	R933002798

Characteristic curves

Ordering code 2: 10 l/min (2.64 gpm) with Δp 10 bar (145 psi).

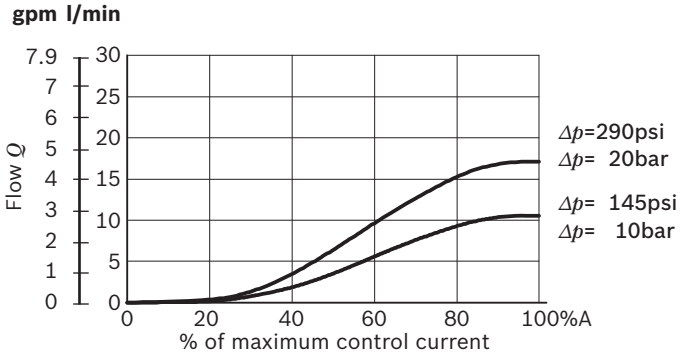

Ordering code 4: 20 l/min (5.28 gpm) with Δp 10 bar (145 psi)

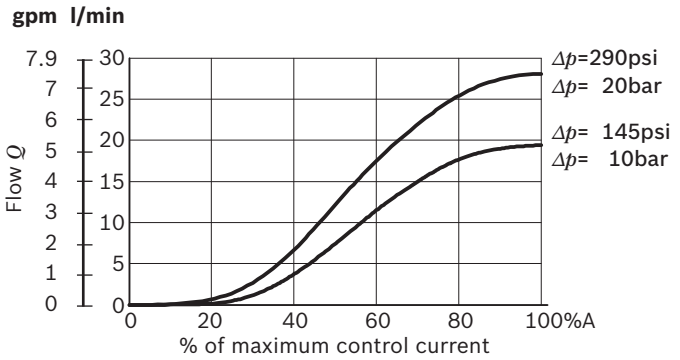

Ordering code 6: 30 l/min (7.92 gpm) with Δp 10 bar (145 psi)

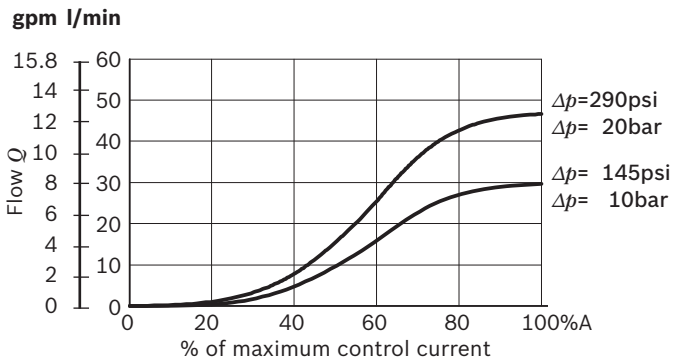

Δp= valve pressure differential (inlet pressure Pp minus load Pl and minus return pressure Pt).

External dimensions and fittings

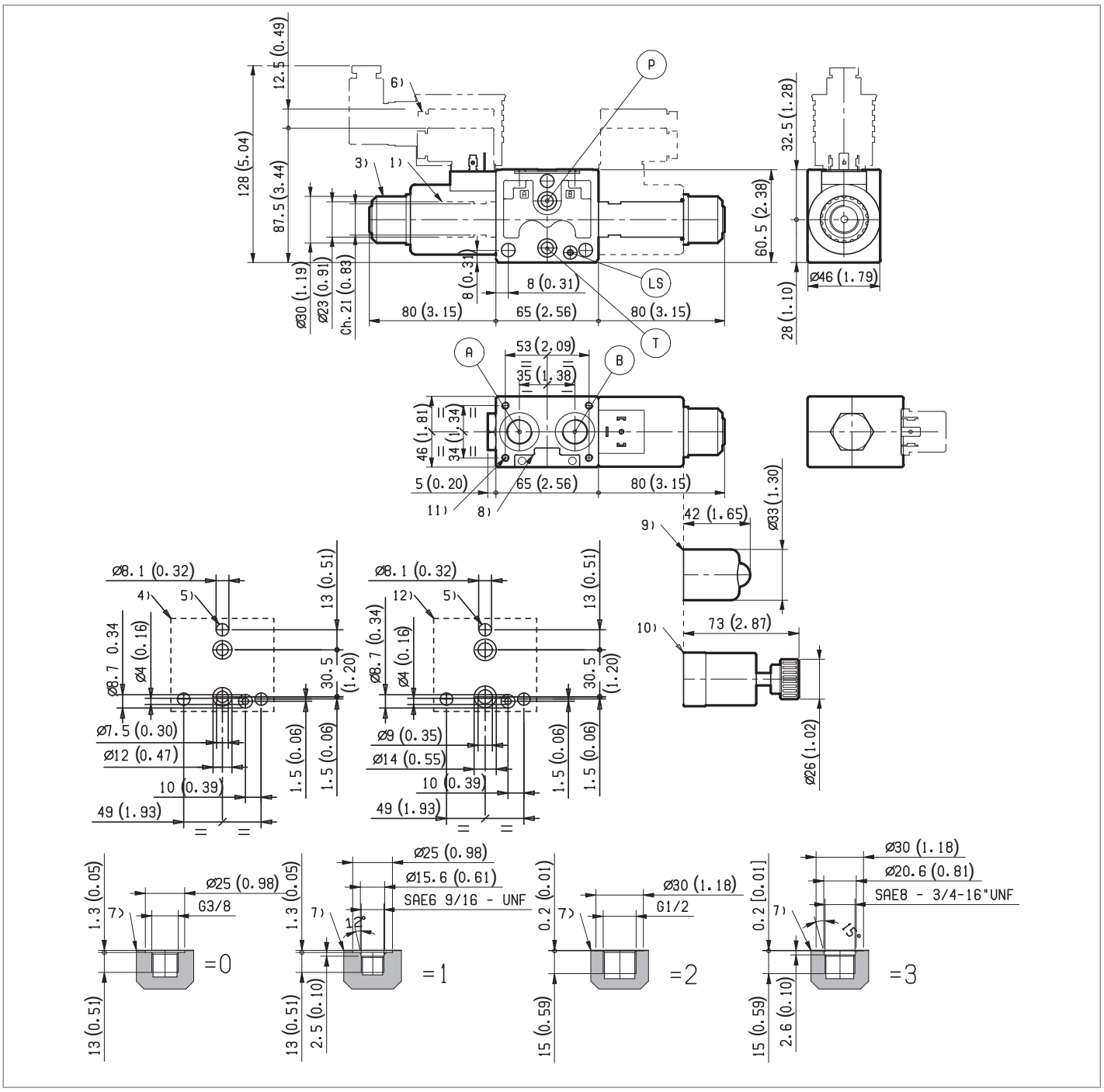

1 Solenoid tube Ø 23 mm (0.9 inch).
3 Ring nut for coil locking (Ø 30 mm);
torque 6 – 7 Nm (4.4 – 5.2 ft-lb).
4 Flange specifications for coupling to ED intermediate elements with ports G 3/8 and SAE 6.
5 For tie rod and tightening torque information see data sheet RE 18301-90.
6 Clearance needed for connector removal.
7 A and B ports.
8 Identification label.
9 Optional push-button manual override, EP type, for spool opening: it is pressure stuck to the ring nut for coil locking. Mat no. R933003289.
10 Optional screw type manual override, EF type, for spool opening: it is screwed (torque 6-7 (4.4-5.2 ft-lb)) to the tube as replacement of the coil ring nut. Mat no. R933003116.
11 Four threaded holes M5 for fitting a secondary flangeable element (only for elements with ports G 3/8 and SAE 6). Bolts M5 with recommended strength class DIN 8.8:
torque 5 – 6 Nm (3.6-4.4 ft-lb).
12 Flange specifications for coupling to ED intermediate elements with ports G 1/2 and SAE 8.

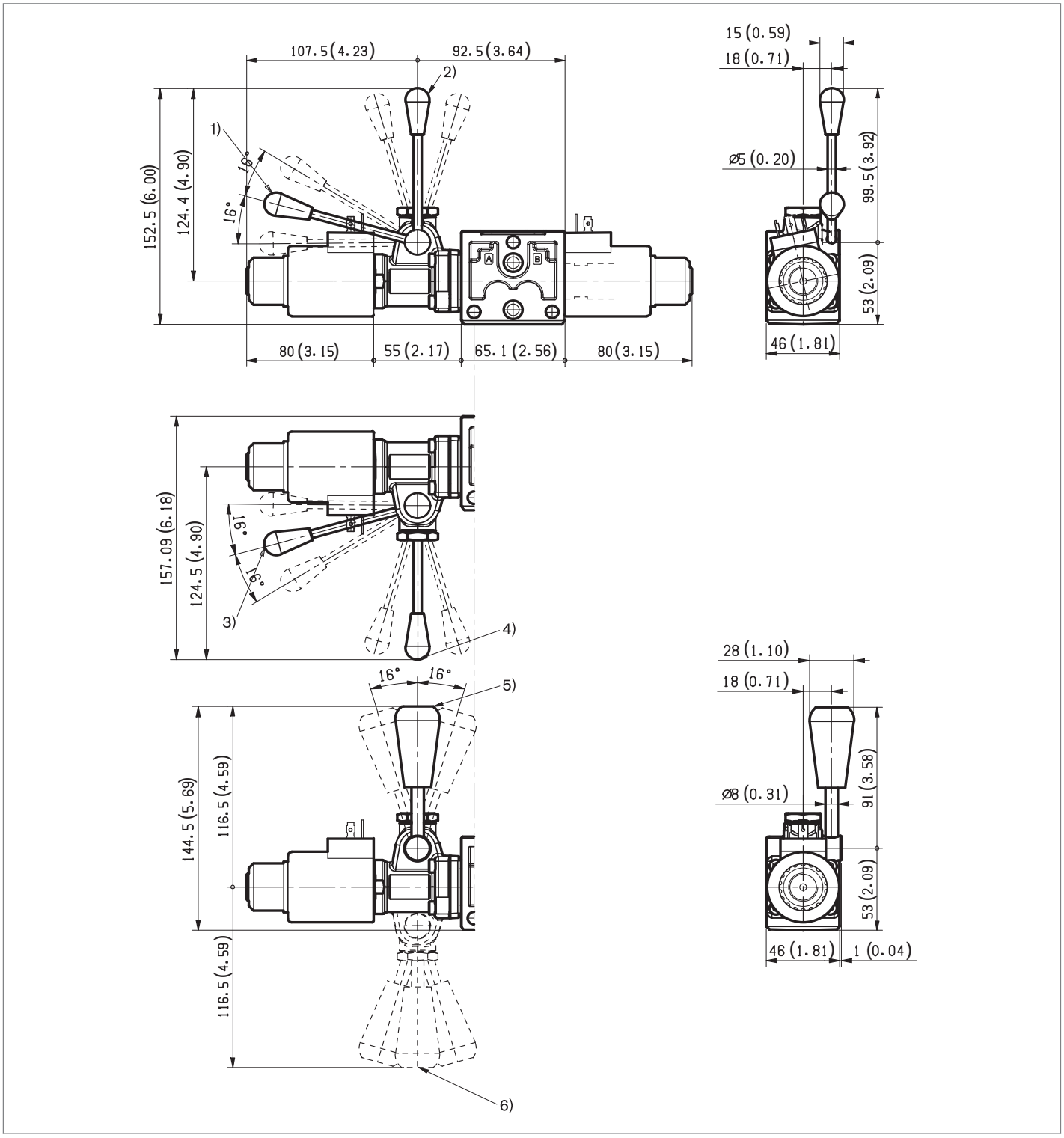

1 Ordering Details: HA (if fitted to side A) or HB (if fitted to side B)
2 Ordering Details: VA (if fitted to side A) or VB (if fitted to side B)
3 Ordering Details: H1 (if fitted to side A) or H9 (if fitted to side B)
4 Ordering Details: V1 (if fitted to side A) or V9 (if fitted to side B)
5 Ordering Details: XA (if fitted to side A) or XB (if fitted to side B)
6 Ordering Details: X1 (if fitted to side A) or X9 (if fitted to side B)

Dimensions [mm (inches)]

Electric connection

01 Protection class: IP 65 when connector with seal is properly screwed down.

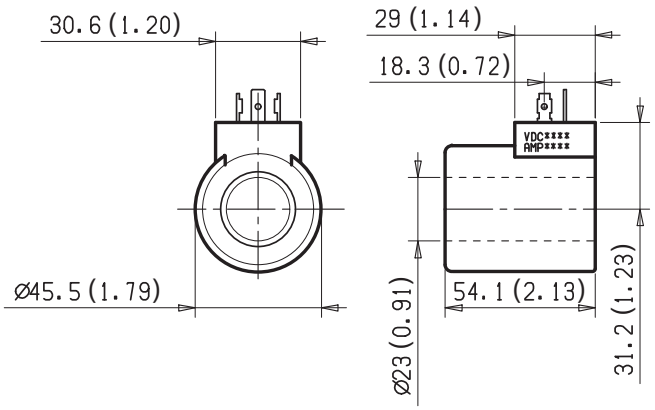

03 Protection class: IP 65 with female connector properly fitted (see drawing).

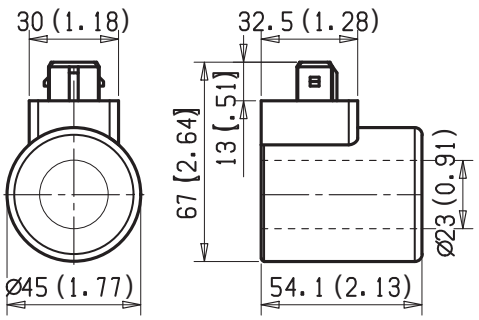

07 Protection class: IP 69 K with female connector properly fitted.

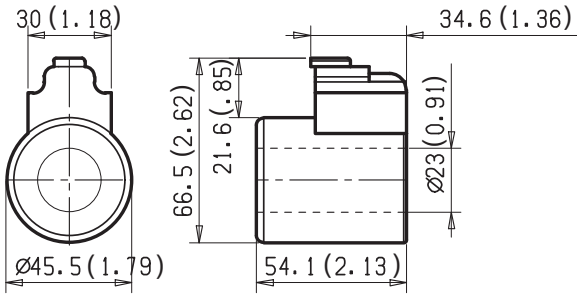

Electronic feed regulator

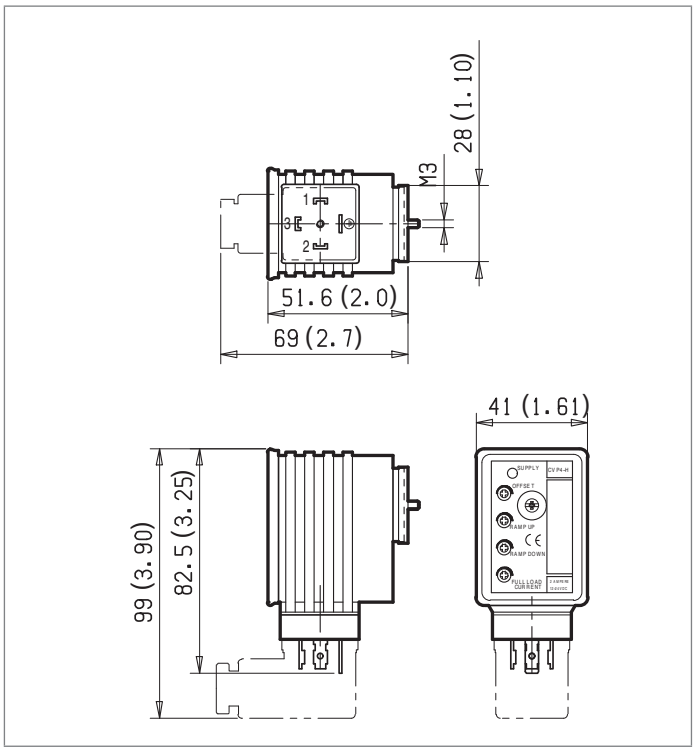

Supply: yellow LED, lit up with power ON.
Off Set: minimum current adjustment. Adjust solenoid current so that the desired minimum value is obtained. Clockwise rotation increases current.
Ramp up: Ramping up time adjustment.
Ramp down: Ramping down time adjustment.
For longer ramping times, turn potentiometers clockwise; for shorter ramping times, turn the potentiometers counter-clockwise.
Full load current: Maximum current adjustment. Adjust solenoid current so that the desired maximum value is obtained (up to 2A). Clockwise rotation increases current.
Frequency adjustment: it is possible to set the PWM frequency obtaining the desired control sensitivity. After removing the external plastic cover, turn the adjusting screw; clockwise rotation increases frequency from 100 to 500 Hz.

Electronic feed regulator	
Regulator ordering code	R933003290
Supply voltage	12-30 VDC
Control Signal	0-10 VDC
Max. output current	2 A
Minimum output current	0....0.6 A
Ramp adjustment up/down	0.1....10 s
PWM Frequency adjustment (pre-set 120 Hz)	100....500 Hz
Ambient operating temperature	-10....+60 °C *(14....+140 °F)*
Weight	0.12 kg *(26.4 lbs)*
Electromagnetic compatibility	EN50081-1/2EN61000-4-2/3/4/5/6
Protection class with connector and seal correctly fitted and properly screwed down.	IP 65 (DIN40050 part 9)
Potentiometer resistance	5....10 κ Ω

4/3 Directional valve elements with proportional control and with or without LS connections

L8_P5... (ED-IP)

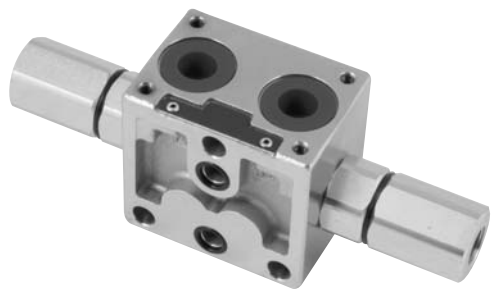

Size 6
Series 00
Maximum operating pressure 310 bar (4500 psi)
Maximum flow 45 l/min (11.9v gpm)
Port connections G 3/8 - G 1/2 - SAE6 - SAE8

General specifications

Valve element 4 ways, 3 positions.
Hydraulically direct operated spool.
Hydraulic operating element bolted on.
Hydraulic operating element available with inlet port: G1/4 DIN 3852; 9/16-18 UNF 2-B.
The control spool is held in the central position by return springs.

Contents

Ordering details	2
Symbols	2
Functional description	3
Technical data	3
Characteristic curves	4
External dimensions and fittings	5

RF 1080 - 07/02 2016, Bosch Rexroth AG

Ordering details

01	02	03	04	05	06	07	08		09	
L	**8**		**P5**				**00**	**00**		**0**

Family

01	Directional Valve elements ED	**L**

Type

02	Size 6 proportional	**8**

Configuration

03	Standard	**0**
	With Load Sensing control	**4**

Operation type

04	Direct hydraulic proportional	**P5**

Spool variants

05	4/3 operated both sides a and b; P – T closed in neutral	**B2**
	4/3 operated on both sides a and b; A and B to T in neutral	**E2**

Flow pattern

06	Both meter in and out	**S**
	Meter in	**I**

Nominal flow [1)]

07	10 l/min (2.64 gpm)	**2**
	20 l/min (5.28 gpm)	**4**
	30 l/min (7.9 gpm)	**6**

Hydraulic control pressure

08	10-21 bar (145-305 psi)	**00**

Ports

09	G 3/8 DIN 3852	**0**
	9/16-18 UNF 2-B (SAE6)	**1**
	G 1/2 DIN 3852	**2**
	3/4-16 UNF 2-B (SAE8)	**3**

1) With Δp (P > T) 10 bar (145 psi), corresponding approx. to Δp P>A,B 5 bar (73 psi).

Symbols

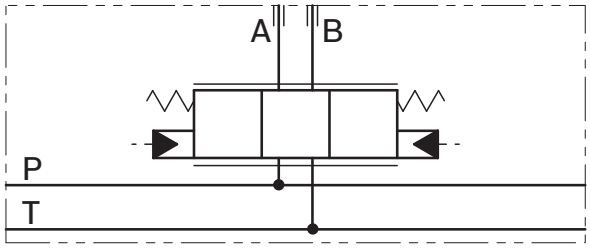

= 0

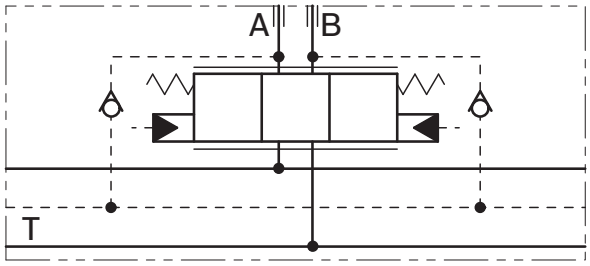

= 4

Spool variants

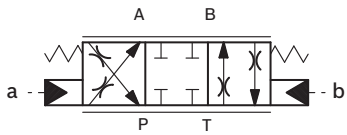

=B2S

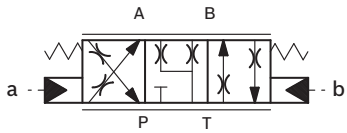

=E2S

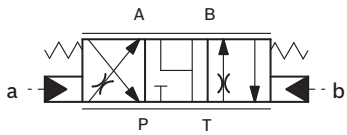

=E2I

In neutal position, the valves cross section are as follows:
E_I ≥ 20% of nominal cross section.
E_S ≥ 2% of nominal cross section.

Functional description

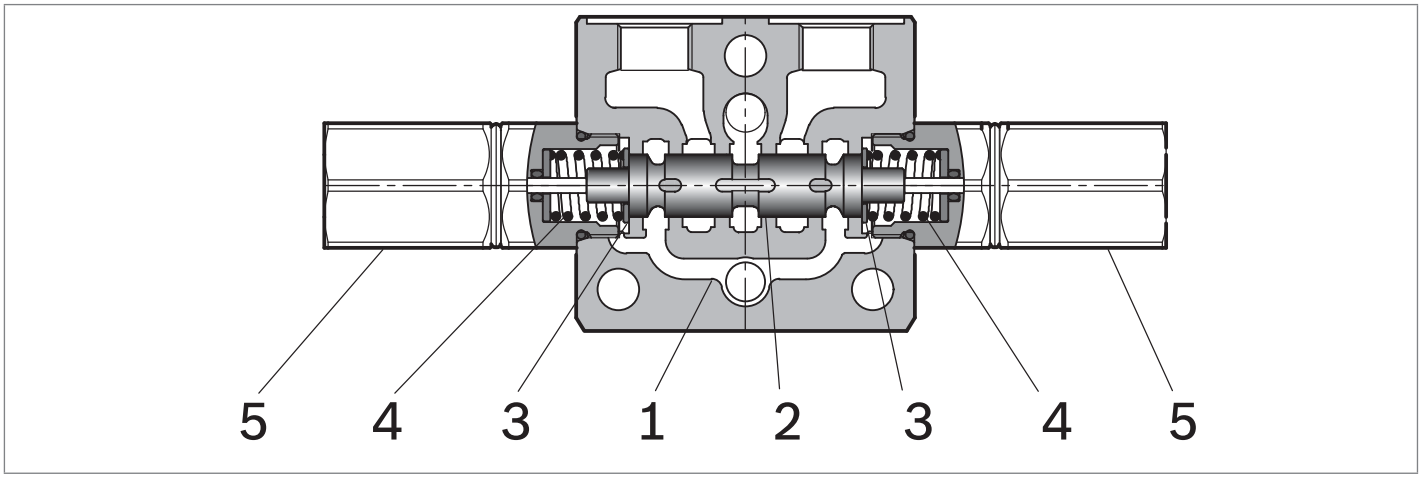

The sandwich plate design directional valve elements L8_ P5... are compact direct hydraulic operated valves which control the start, the stop and the direction of the oil flow. These elements basically consist of a stackable housing (**1**) with a control spool (**2**), two hydraulic operating blocks (**5**), and two return springs (**4**).

The hydraulic pressure in one of the blocks (**5**) pushes the control spool (**2**) from its neutral-central position “0” to the required end position “a” or “b”, and the required flow from P to A (with B to T), or P to B (with A to T) is achieved. When pressure is removed from either one of blocks (**5**), the return spring (4) pushes the spool thrust washer (**3**) back against the housing and the spool returns in its neutral-central position “0”.

Technical data

General		
Valve element with 2 hydraulic controls	kg (lbs)	1.23 (2.71)
Ambient Temperature	°C (°F)	–20....+50 (-4....+122) (NBR seals)
Hydraulic		
Maximum pressure at P, A and B ports	bar (psi)	310 (4500)
Maximum pressure at T to prevent damages	bar (psi)	100 (1450)
Reccomended maximum pressure at T during operation	bar (psi)	10 (145)
Max. pilot pressure	bar (psi)	35 (508)
Min. pilot pressure	bar (psi)	refer to page 4
Maximum inlet flow	l/min (gpm)	45 (11.9)
Hydraulic fluid General properties: it must have physical lubricating and chemical properties suitable for use in hydraulic systems such as, for example:		Mineral oil based hydraulic fluids HL (DIN 51524 part 1). Mineral oil based hydraulic fluids HLP (DIN 51524 part 2). For use of environmentally acceptable fluids (vegetable or polyglycol base) please consult us.
Fluid Temperature	°C (°F)	–20....+80 (-4....+176) (NBR seals)
Permissible degree of fluid contamination		ISO 4572: $\beta_x \geq 75$ X=10...12 ISO 4406: class 19/17/14 NAS 1638: class 8
Viscosity range	mm^2/s	20....380 (optimal 30....46)

Note
For applications with different specifications consult us

Characteristic curves

Ordering code S2: 10 l/min (2.64 gpm).

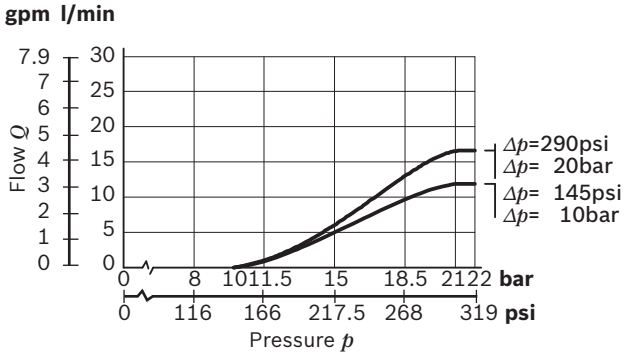

Ordering code S4: 20 l/min (5.28 gpm).

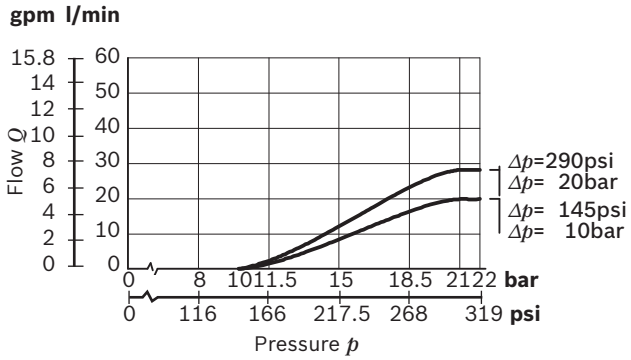

Ordering code S6: 30 l/min (7.92 gpm).

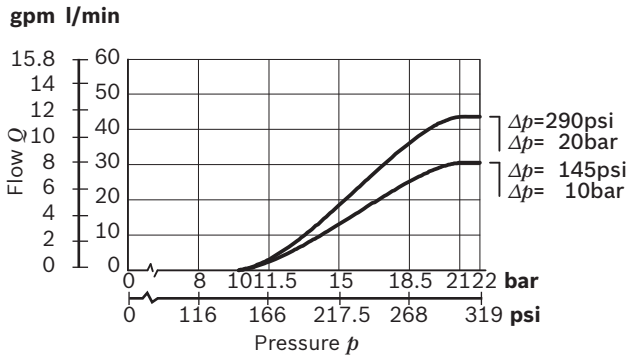

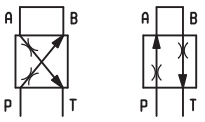

The performance curves are measured with flow going across and coming back, like P>A and B>T, with symmetrical flow areas and with back-pressure in T ≤ 10 bar (145 psi).

External dimensions and fittings

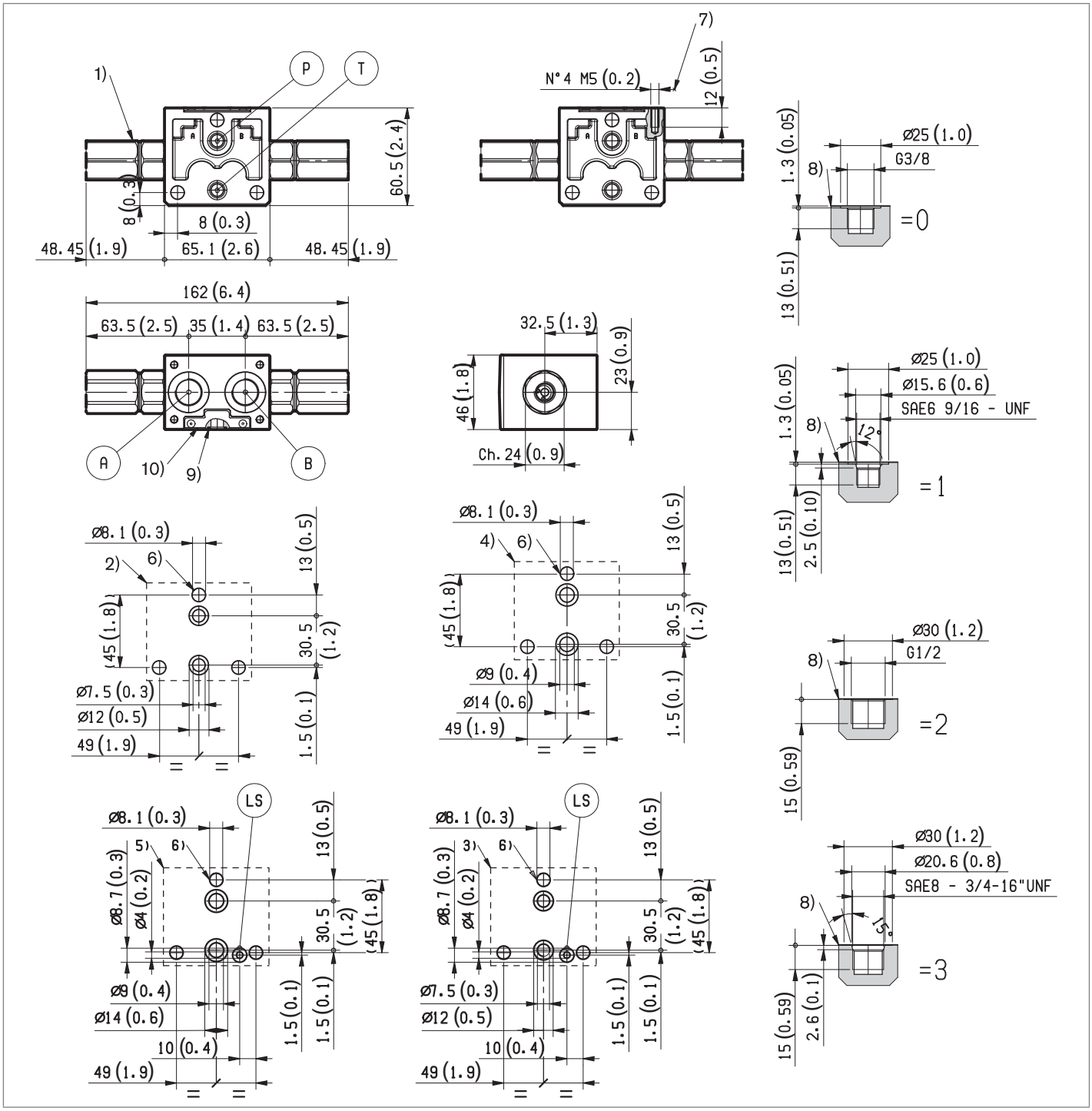

1 Hydraulic operating element available with inlet port: G1/4 DIN 3852; 9/16-18 UNF 2-B (SAE 6).
2 Flange specifications for coupling to ED intermediate elements with ports G 3/8 and SAE 6.
3 Flange specifications for coupling to ED intermediate elements with LS channels and with ports G 3/8 and SAE 6.
4 Flange specifications for coupling to ED intermediate elements with ports G 1/2 and SAE 8.
5 Flange specifications for coupling to ED intermediate elements with LS channels with and ports G 3/8 and SAE 6.
6 For tie rod and tightening torque information see data sheet RE 18301-90.
7 Four threaded holes M5 for fitting a secondary flangeable element (only for elements with ports G 3/8 and SAE 6).
For screws and tightening torques see data sheet RE 18301-90.
8 A and B ports.
9 O-Rings for P and T ports.
10 Identification label.

4/3 Directional valve elements with manual lever operated control and with or without LS connections

L8_L1... (ED-LV)

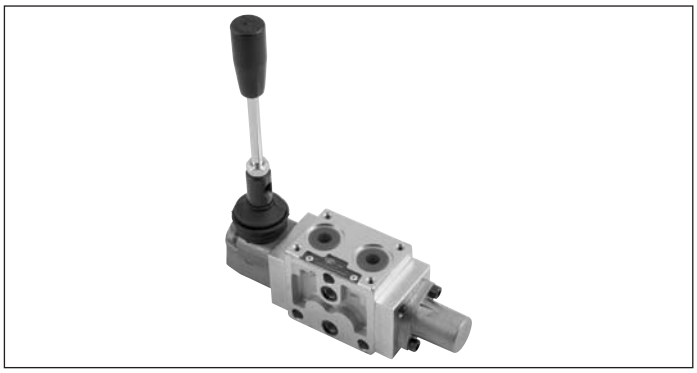

Size 6
Series 00
Maximum operating pressure 310 bar (4500 psi)
Maximum flow 60 l/min (15.8 gpm)
Port connections G 3/8 - G 1/2 - SAE8

General specifications

Valve elements 4 ways 3 positions.
Control spools manual operated by hand lever.
Control spool with return spring or mechanical detent for all three positions.

Contents

Ordering details	2
Functional description	3
Technical data	4
Characteristic curves	5
External dimensions and fittings	6

RF 1030 - 08/02 2010, Bosch Rexroth AG

Ordering details

01	02	03	04	05	06	07	08	09	10	
L	**8**		**L1**							**0**

Family

01	Directional Valve elements ED	**L**

Type

02	Size 6	**8**

Configuration

03	Standard	**0**
	With Load Sensing control	**4**

Operation type

04	Manual lever	**L1**

Spool variants

05	4/3 4 ways and 3 positions	**_2**

Flow pattern

06	Both meter in and out [1]	**S**

Nominal flow [2]

07	18 l/min (5.75 gpm)	**4** [3]
	40 l/min (10.6 gpm)	**8**

Side with the control lever

08	a side with handle aiming high (A and B direction)	**A0**
	a side with handle aiming low (opposite to A and B)	**A2**
	b side with handle aiming high (A and B direction)	**B0**
	b side with handle aiming low (opposite to A and B)	**B2**

Manual lever control

09	With return spring	**M1**
	With mechanical detent for all three positions	**F1**

Ports

10	G 3/8 DIN 3852	**0**
	G 1/2 DIN 3852	**2**
	3/4-16 UNF 2-B (SAE8)	**3**

Symbols

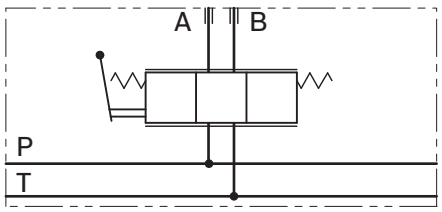

= 0

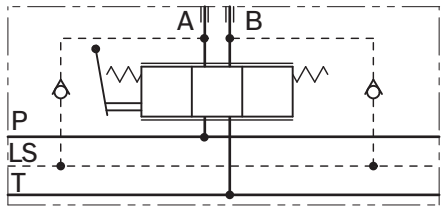

= 4

Spool variants

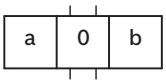

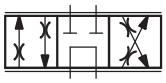

=A2S

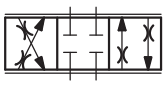

=B2S

=E2S4

E2S8

Side with the control lever

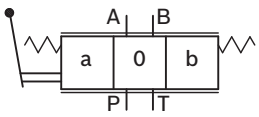

= _2S_A_M1_

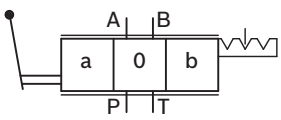

= _2S_A_F1_

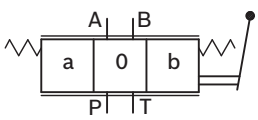

= _2S_B_M1_

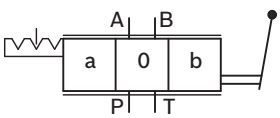

= _2S_B_F1_

1) Only meter in for E2S8 spool variant
2) With Δp (P > T) 10 bar (145 psi), corresponding approx. to Δp P>A,B 5 bar (73 psi).
3) Available only for B_, E_ spool variants.

Functional description

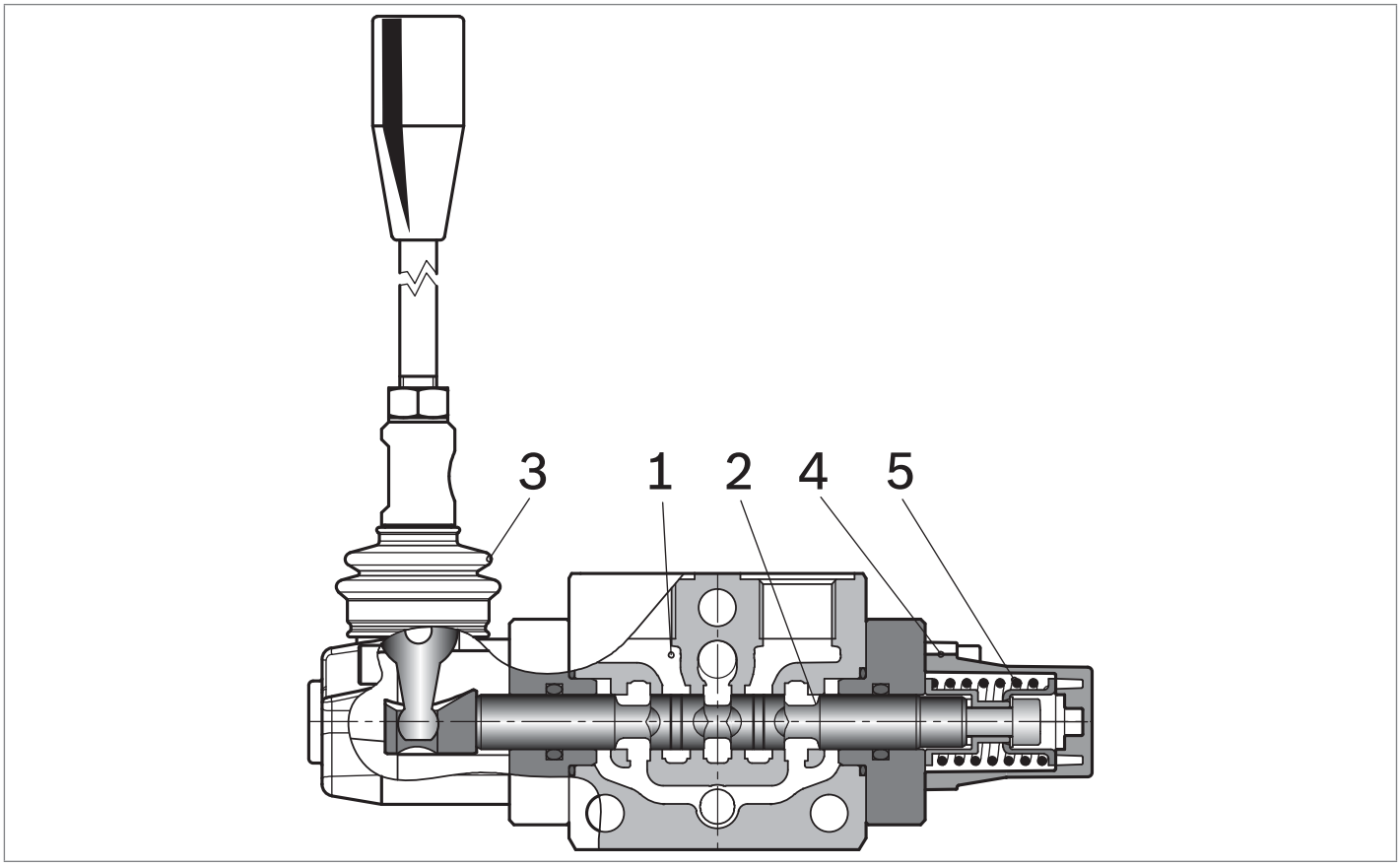

The sandwich plate design directional valve elements L8_1... are compact manual operated valves which control the start, the stop and the direction of the oil flow.
These elements basically consist of a stackable housing (**1**) with a control spool (**2**), a block with the control lever (**3**), and a spring housing (**4**) with a return spring (**5**).
The hand operated lever moves the control spool (**2**) from its neutral-central position “0” to the required position “a” or “b”, and the required flow from P to A (with B to T), or P to B (with A to T) is achieved.
Type L8_L1_2S_ __M100 is the valve version in which the return spring (**5**) brings the spool back to neutral-central position “0” when the manual lever is not operated.
The valve is available with a choice of spool variants (refer to page 2).
Type L8_L1_2S_ __F100 is the valve version with mechanical detent in which the control spool (**2**) stays in anyone of the 3 achieved positions “0”, “a” or “b” when the lever is left free. With this valve, the oil delivery can continue without any action on the lever.
Also this version is available with a choice of spool variants (refer to page 2).
Special types of control are available upon request.

Technical data

General		
Valve element weight	kg (lbs)	1.55 (3.42)
Mounting position	kg (lbs)	Unrestricted
Ambient Temperature	°C (°F)	–20....+50 (-4....+122) (NBR seals)
Hydraulic		
Maximum pressure at P, A and B ports	bar (psi)	310 (4500)
Maximum pressure at T	bar (psi)	160 (2320)
Maximum inlet flow	l/min (gpm)	60 (15.9)
Nominal flow with DP P>T = 10 bar (145 psi)	l/min (gpm)	10, 20, 30 (2.64, 5.28, 7.9)
Hydraulic fluid General properties: it must have physical lubricating and chemical properties suitable for use in hydraulic systems such as, for example:		Mineral oil based hydraulic fluids HL (DIN 51524 part 1). Mineral oil based hydraulic fluids HLP (DIN 51524 part 2). For use of environmentally acceptable fluids (vegetable or polyglycol base) please consult us.
Fluid Temperature	°C (°F)	–20....+80 (-4....+176) (NBR seals)
Permissible degree of fluid contamination		ISO 4572: $\beta_x \geq 75$ X=12...15 ISO 4406: class 20/15/15 NAS 1638: class 9
Viscosity range	mm^2/s	5....420

Note
For applications with different specifications consult us

Characteristic curves

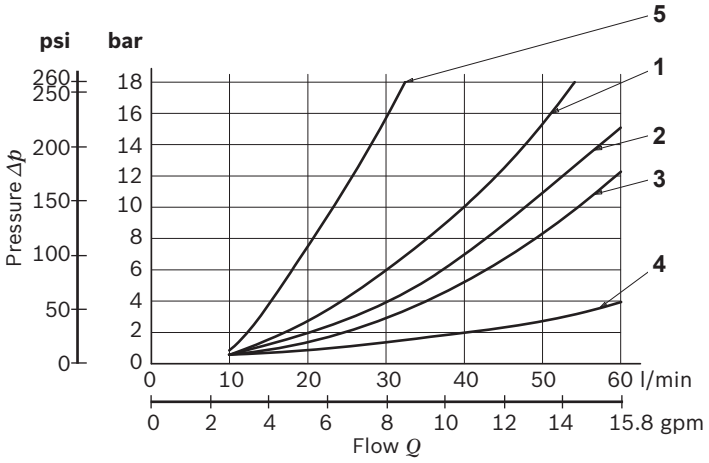

Spool Variant	Curve no.				
	P>A	P>B	A>T	B>T	P>T
B2S8, E2S8	2	2	4	4	-
A2S8	3	3	3	3	1
B2S4, E2S4	1	1	5	5	-

Measured with hydraulic fluid ISO-VG32 at 45° ±5 °C (113° ±9 °F); ambient temperature 20 °C (68 °F).

Performance limits

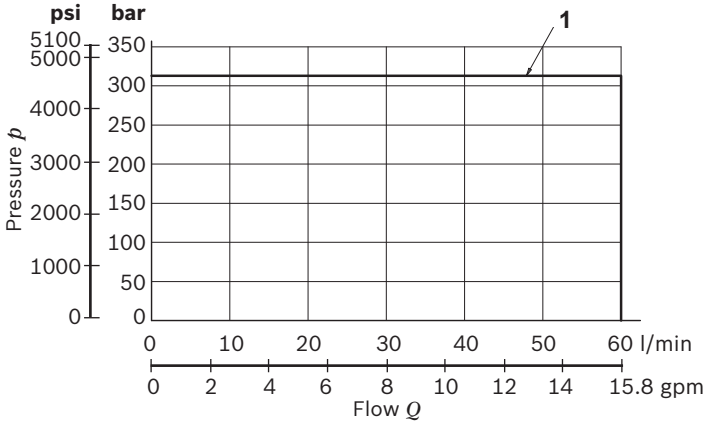

Spool Variant	Curve no.
A2S8, B2S8, E2S8, B2S4, E2S4	1

Minimum flow for efficiency of LS control

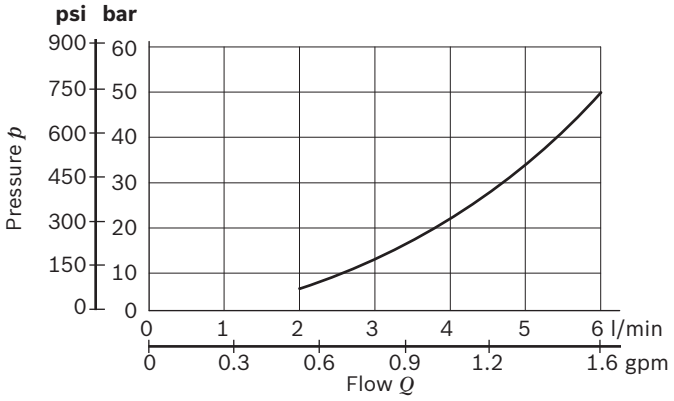

External dimensions and fittings

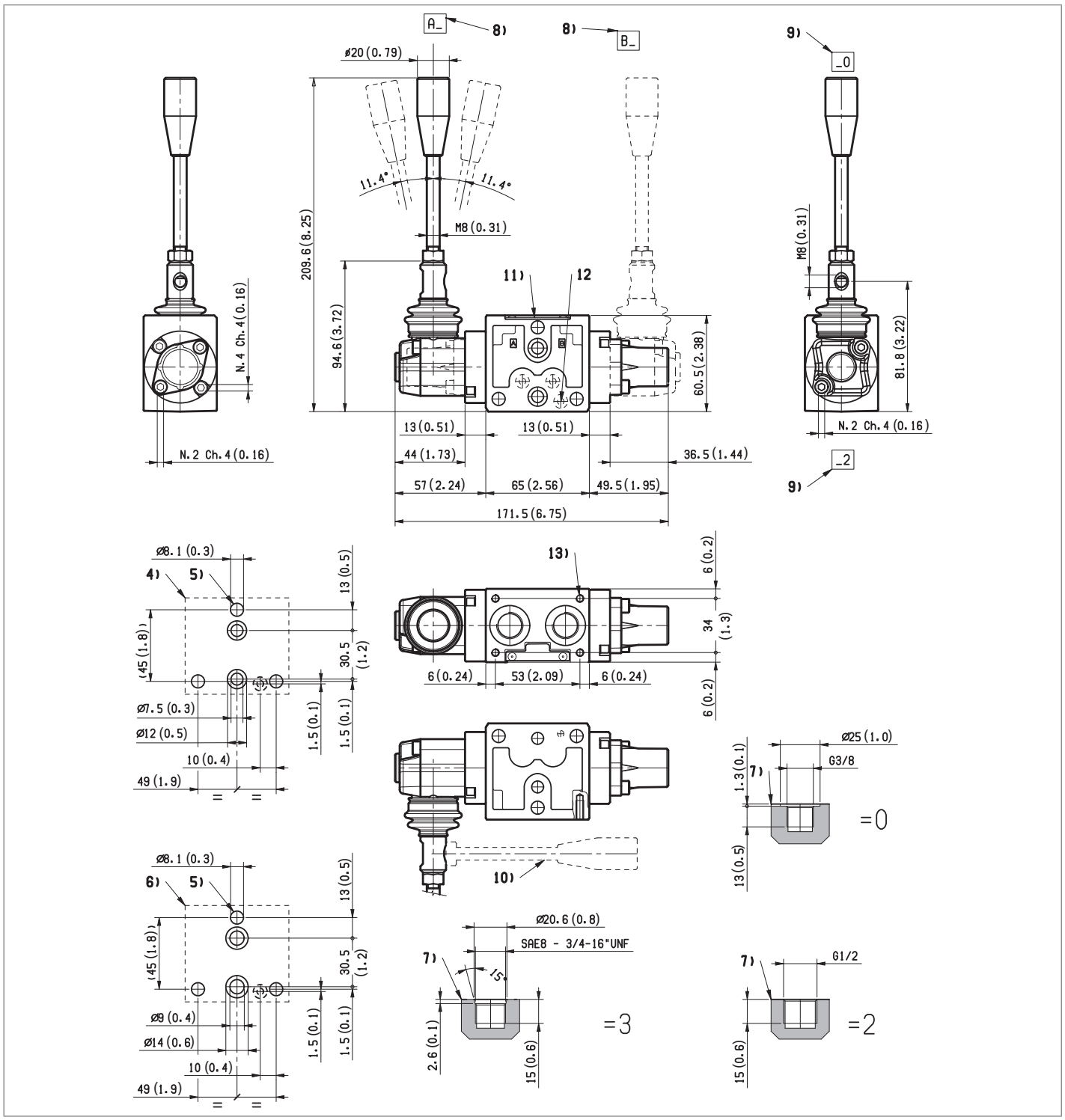

4 Flange specifications for coupling to ED intermediate elements with ports G 3/8.
5 For tie rod and tightening torque information see data sheet RE 18301-90.
6 Flange specifications for coupling to ED intermediate elements with ports G 1/2 (SAE 8).
7 A and B ports.
8 Side with the control lever (Standard is side A).
9 Hand lever orientation.
10 Hand lever orientation for packing and shipment.
11 Identification label.
12 LS channel (only for versions L84...).
13 Four threaded holes for fitting a secondary flangeable elements:
- M5 holes on versions with ports G 3/8.
- M6 holes on versions with ports SAE 8.
- Without when the ports is G 1/2.

Directional valve elements with proportional control of Tank unloaded excess flow

L808103P... (ED4-PT1)

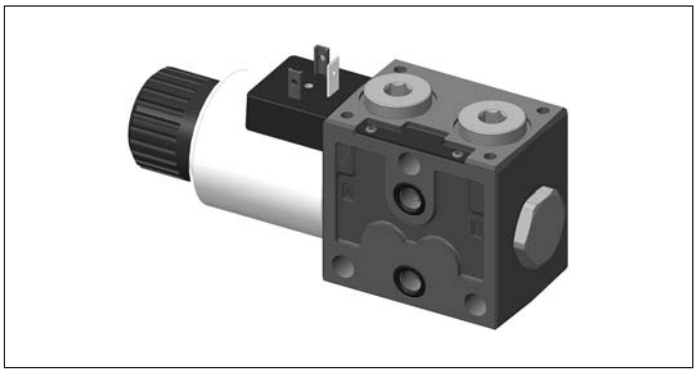

- Size 6
- Series 00
- Maximum operating pressure 310 bar (4500 psi)
- Maximum flow 35 l/min (9.2 gpm)

General specifications

- Valve element with direct proportional control of spool.
- Proportional, non pressure compensated, valve element for partial or total unloading to Tank of P flow.
- Control spool operated by solenoids with removable coils.
- In the de-energized condition, the control spool is held in normal position by return spring.
- Wet pin proportional tubes for DC coils, with push rod for mechanical override; nickel plated surface.
- Manual override (push-button, screw or lever type) available as option.

Contents

Ordering details	2
Symbols	2
Example of application	3
Functional description	3
Technical data	4
Characteristic curves	5
External dimensions and fittings	6
Electric connection	8
Electronic feed regulator	9

RF 1080 - 13/09 2010, Bosch Rexroth AG

Ordering details

01	02	03	04	05	06	07		08
L	**80**	**81**	**03P**				**00**	

Family

01	Directional Valve elements ED	**L**

Type

02	Size 6 proportional	**80**

Coil type

03	GP45	**81**

Spool variants

04	2/2 normally open proportional P to T, controlled side a	**03P**

Nominal flow [1]

05	12 l/min (3.2 gpm)	**1**
	18 l/min (4.75 gpm)	**2**
	25 l/min (6.6 gpm)	**3**
	35 l/min (9.2 gpm)	**4**

Voltage supply		**00**	**01**	**03**	**07**	
06	Without coil	●	–	–	–	**00**
	12V DC	–	●	●	●	**OB**
	24V DC	–	●	●	●	**OC**

Electric connections

07	Without coils	**00**
	With coils, without mating connector DIN EN 175301-803	**01** [2]
	With coils, without mating connector vertical Amp-Junior	**03**
	With coils, without mating connector DT04-2P	**07**

Options

08	No options	**No code**
	Push-button type manual override	**0P**
	Screw type manual override	**0F**
	Twist type manual override (180°)	**0T**
	Red push-button type manual override	**RP**
	Black push-button type manual override	**NP**
	Lever type manual override [3]	**_ _**

● = Available – = Not available

Symbols

▼ **Spool variants**

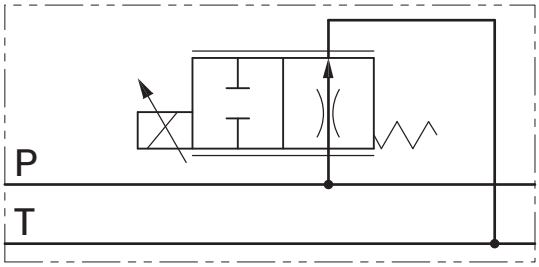

1) With ΔP (P > T) 10 bar (145 psi).
2) For connectors ordering code see data sheet RE 18325-90.
3) As lever type manual override a choice of options is available and each one implies a specific ordering code (refer to page 7).

Example of application

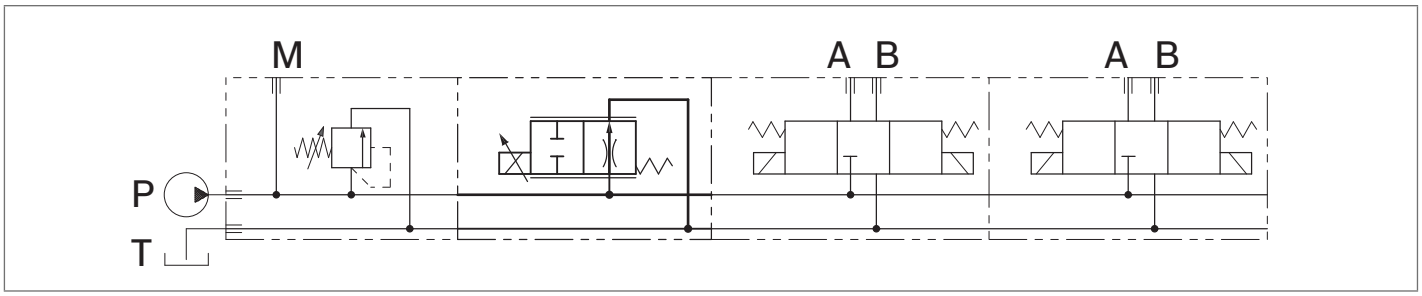

Functional description

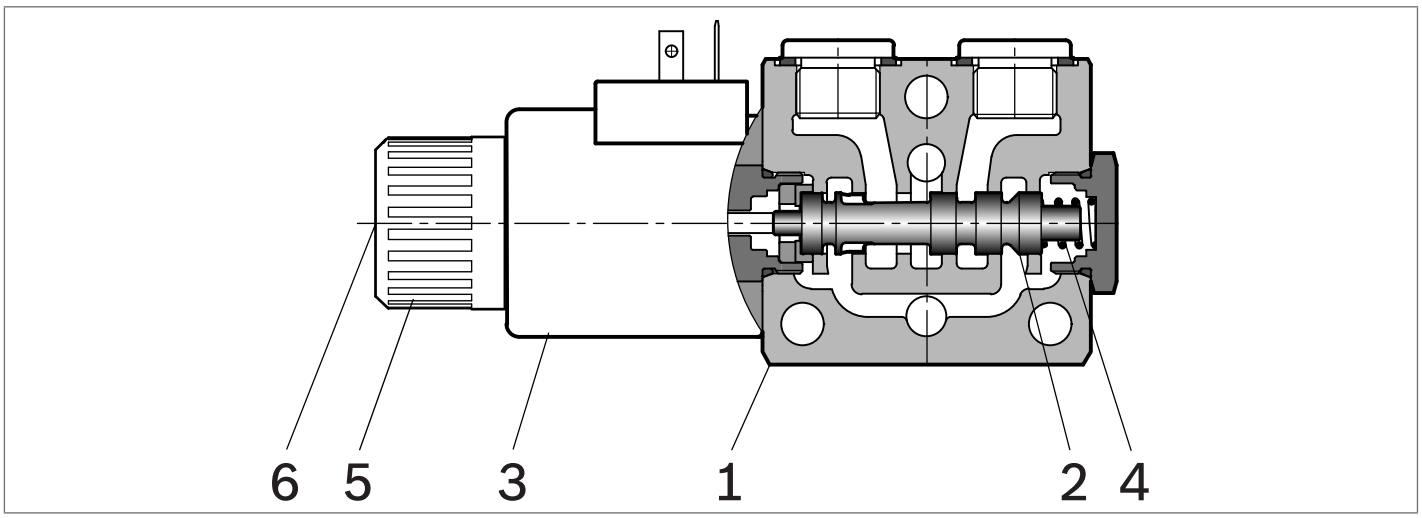

The sandwich plate design valve elements L808103P... are compact direct operated proportional solenoid valves which divert totally or partially the inlet P flow to Tank. These elements basically consist of a stackable housing (**1**) with a control spool (**2**), one solenoid (**3**), and one return spring (**4**).
With the solenoid de-energized, the return spring (**4**) keeps the spool (**2**) in its rest position “0” and all the inlet P flow passes through the valve and is unloaded to Tank. When energized by the electronic feed regulator, the solenoid (**3**) displaces the control spool (**2**) from its rest position proportionally to the current received and proportionally restricts the flow area to Tank. A regulated, non pressure compensated, oil flow is diverted from P to T and the remaining amount of inlet flow in the P line remains available for the downstream operators.
The coil (**3**) is fastened to the solenoid tube by a ring nut (**5**).
A pin (**6**) allows to push the spool (**2**) in emergency conditions, when the solenoid cannot be energized, like in case of voltage shortage.

Technical data

General		
Valve element with 1 solenoid, pins EN175301-803	kg (lbs)	1.7 (3.75)
Ambient Temperature	°C (°F)	–30....+90 (-22....+194) (NBR seals)
Hydraulic		
Maximum pressure at P	bar (psi)	310 (4500)
Maximum inlet flow	l/min (gpm)	35 (9.2)
Hydraulic fluid General properties: it must have physical lubricating and chemical properties suitable for use in hydraulic systems such as, for example:		Mineral oil based hydraulic fluids HL (DIN 51524 part 1). Mineral oil based hydraulic fluids HLP (DIN 51524 part 2). For use of environmentally acceptable fluids (vegetable or polyglycol base) please consult us.
Fluid Temperature	°C (°F)	–30....+100 (-22....+212) (NBR seals)
Permissible degree of fluid contamination		ISO 4572: $\beta_x \geq 75$ X=12...15 ISO 4406: class 20/18/15 NAS 1638: class 9
Viscosity range	mm^2/s	20....380 (optimal 30....46)
Electrical		
Voltage type	PWM	120 Hz
Voltage tolerance (nominal voltage)	%	-10 .... +10
Duty		Continuous, with ambient temperature ≤ 90°C (194°F)
Coil wire temperature not to be exceeded	°C (°F)	180 (356)
Insulation class		H
Compliance with		Low Voltage Directive LVD 73/23/EC (2006/95/EC), 2004/108/EC
Coil weight	kg (lbs)	0.335 (0.732)
Voltage	V	12 24
Nominal 100% current	A	1.8 1.2
Coil resistance - Cold value (nominal at 20°C (68°F))	Ω	3.3 7.2

Note
For applications with different specifications consult us

Code	Voltage [V]	Connector type	Coil description	Marking	Coil Mat no.
OB 01	12 DC	EN 175301-803 (Ex. DIN 43650)	GP45 01 - 45 K4	12 DC	R901022180
OB 03	12 DC	AMP JUNIOR	GP45 03 - 45 C4	12 DC	R901022680
OB 07	12 DC	DEUTSCH DT 04-2P	GP45 07 - 45 K40	12 DC	R901272648
OC 01	24 DC	EN 175301-803 (Ex. DIN 43650)	GP45 01 - 45 K4	24 DC	R901022174
OC 03	24 DC	AMP JUNIOR	GP45 03 - 45 C4	24 DC	R901022683
OC 07	24 DC	DEUTSCH DT 04-2P	GP45 07 - 45 K40	24 DC	R901272647

Characteristic curves

P -> T, vs %A = Percentage of the maximum current supplied to the coil

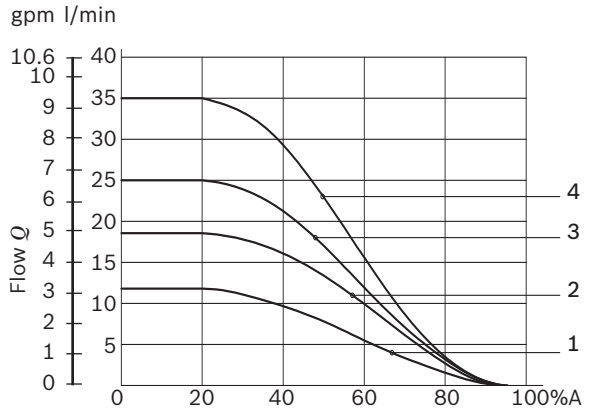

%A = Percentage of the maximum current supplied to the coil

Curve no.	Nominal Flow With Δp (P > T) 10bar (145psi)	Max flow	Max pressure at P
1	12 l/min (3.17gpm)	14 l/min (3.7gpm)	310 bar (4500psi)
2	18 l/min (4.75gpm)	20 l/min (5.3gpm)	310 bar (4500psi)
3	25 l/min (6.6 gpm)	28 l/min (7.4gpm)	310 bar (4500psi)
4	35 l/min (9.2 gpm)	40 l/min (10.57 gpm)	310 bar (4500psi)

2

Pressure Drop

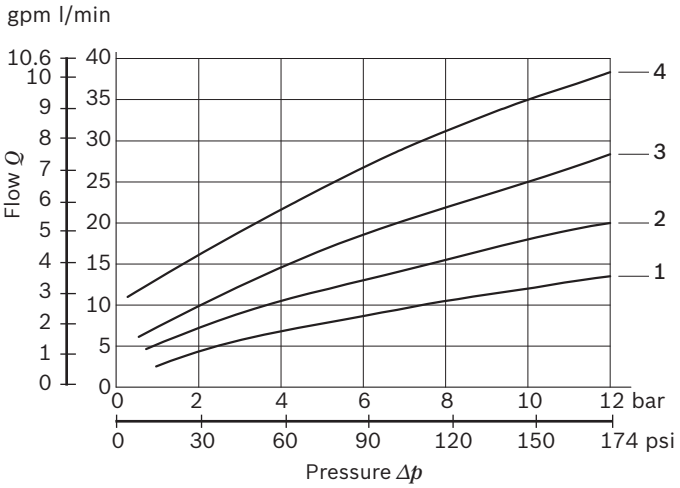

Curve no.	Nominal Flow With Δp (P > T) 10bar (145psi)	Max flow	Max pressure at P
1	12 l/min (3.17gpm)	14 l/min (3.7gpm)	310 bar (4500psi)
2	18 l/min (4.75gpm)	20 l/min (5.3gpm)	310 bar (4500psi)
3	25 l/min (6.6 gpm)	28 l/min (7.4gpm)	310 bar (4500psi)
4	35 l/min (9.2 gpm)	40 l/min (10.57 gpm)	310 bar (4500psi)

Measured with hydraulic fluid ISO-VG32 at 45° ±5 °C (113° ±9 °F); ambient temperature 20 °C (68 °F).

External dimensions and fittings

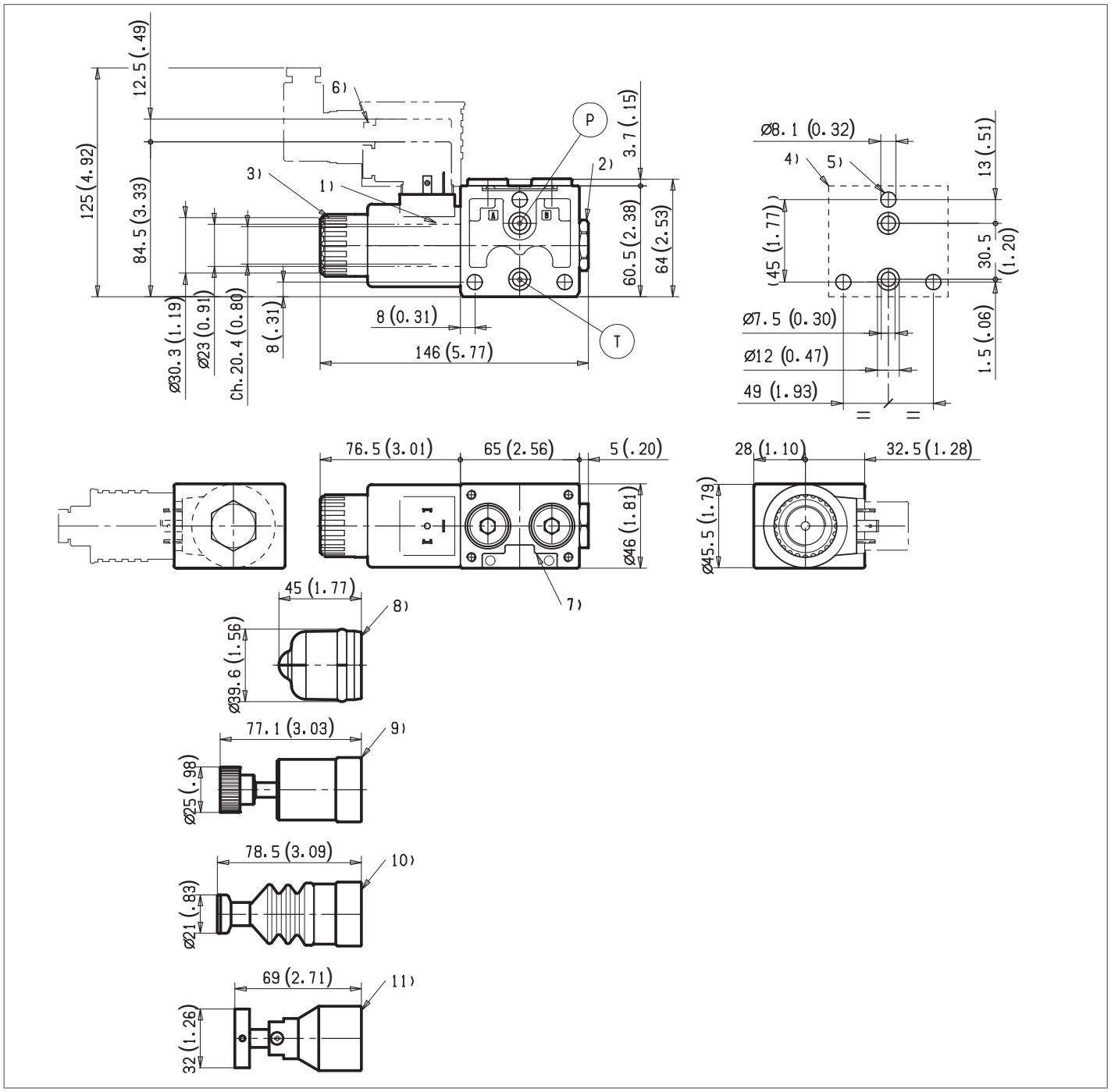

1 Solenoid tube Ø 23 (0.9 inch).
3 Ring nut for coil locking (Ø 30.3 mm (1.18 Inch)); torque 6–7 Nm (4.4 – 5.2 ft-lb).
4 Flange specifications for coupling to ED intermediate elements.
5 For tie rod and tightening torque information see data sheet RE 18301-90.
6 Clearance needed for connector removal.
7 Identification label.
8 Optional push-button manual override, 0P type, for spool opening: it is pressure stuck to the ring nut for coil locking. Mat no. R933003424.
9 Optional screw type manual override, 0F type, for spool opening: it is screwed (torque 6-7 Nm (4.4-5.2 ft-lb)) to the tube as replacement of the coil ring nut. Mat no. R930056486.
10 Optional push-button manual override NP (black) and RP (red) type, for spool opening. It is screwed (torque 6-7Nm (4.4-5.2 ft-lb) to the tube as replacement of the coil ring nut. Mat no. R930056488 (black) - R930056489 (red)
11 Optional twist type manual override, 0T type, for spool opening and locking in the energised position. It is screwed (torque 6-7Nm (4.4-5.2 ft-lb) to the tube as replacement of the coil ring nut. Mat no. R930056487

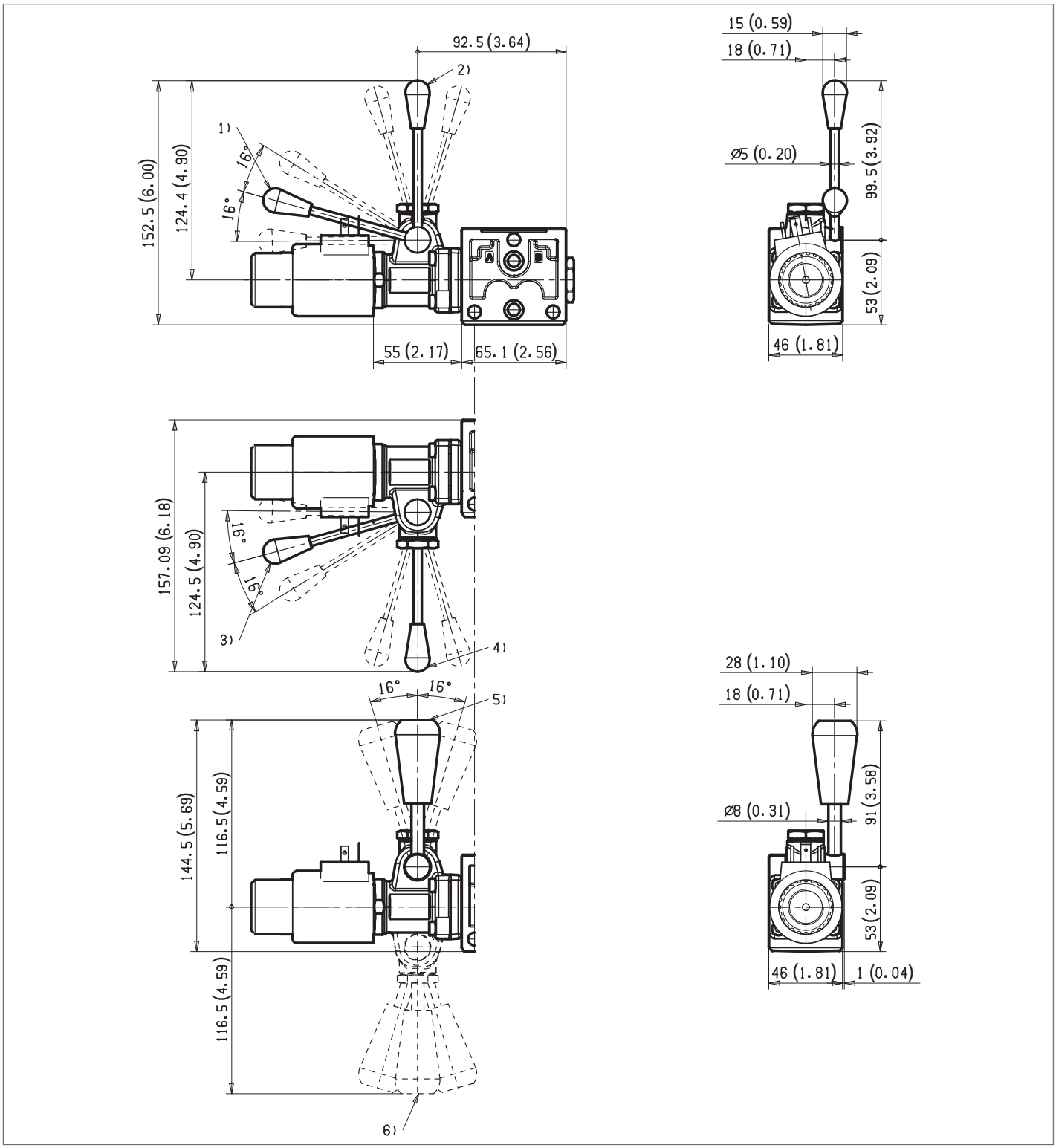

1 Ordering Details: HA (if fitted to side A) or HB (if fitted to side B)
2 Ordering Details: VA (if fitted to side A) or VB (if fitted to side B)
3 Ordering Details: H1 (if fitted to side A) or H9 (if fitted to side B)
4 Ordering Details: V1 (if fitted to side A) or V9 (if fitted to side B)
5 Ordering Details: XA (if fitted to side A) or XB (if fitted to side B)
6 Ordering Details: X1 (if fitted to side A) or X9 (if fitted to side B)

Electric connection

01 Protection class: IP 65 when connector with seal is properly screwed down.

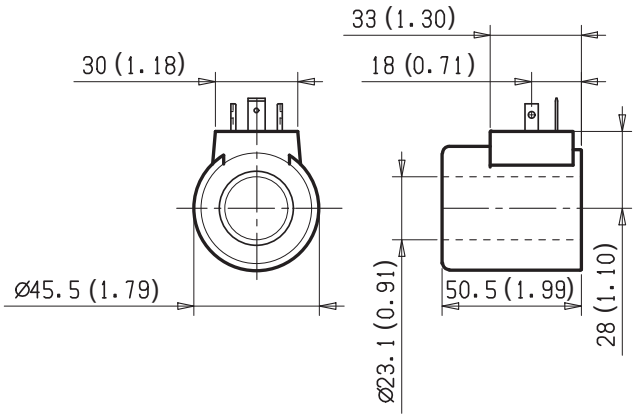

03 Protection class: IP 65 with female connector properly fitted (see drawing).

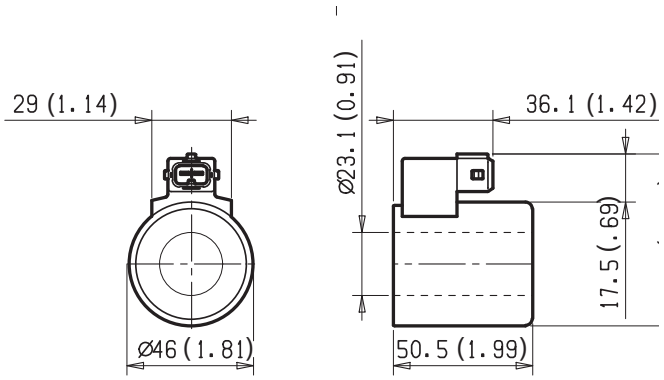

07 Protection class: IP 69 K with female connector properly fitted.

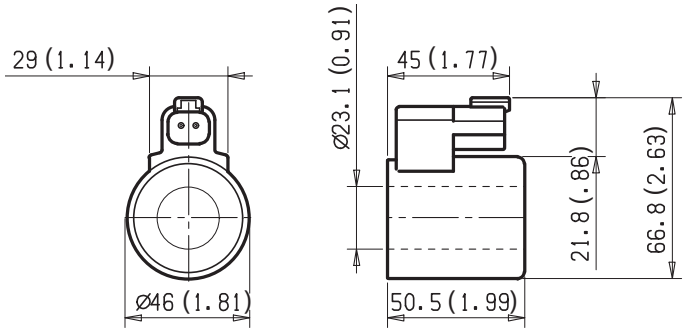

Electronic feed regulator

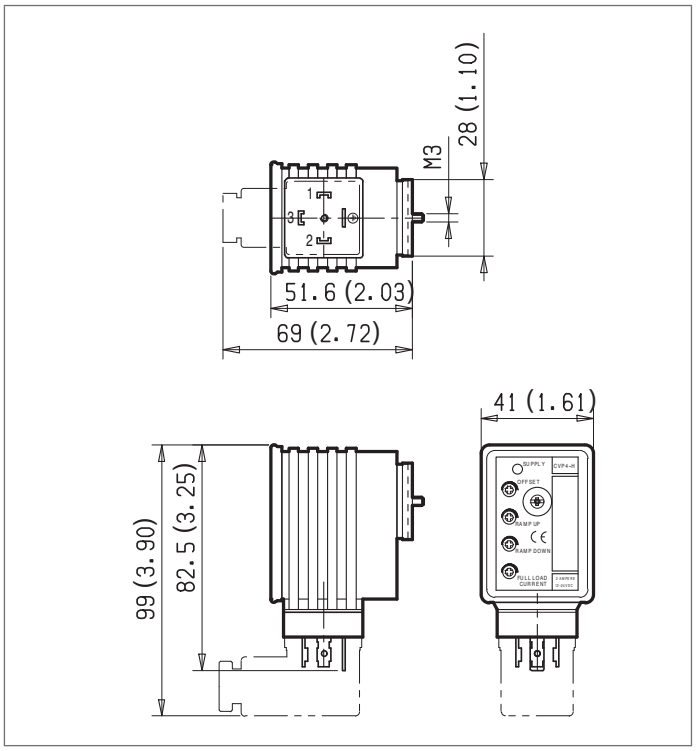

Supply: yellow LED, lit up with power ON.
Off Set: minimum current adjustment. Adjust solenoid current so that the desired minimum value is obtained. Clockwise rotation increases current.
Ramp up: Ramping up time adjustment.
Ramp down: Ramping down time adjustment.
For longer ramping times, turn potentiometers clockwise; for shorter ramping times, turn the potentiometers counter-clockwise.
Full load current: Maximum current adjustment. Adjust solenoid current so that the desired maximum value is obtained (up to 2A). Clockwise rotation increases current.
Frequency adjustment: it is possible to set the PWM frequency obtaining the desired control sensitivity. After removing the external plastic cover, turn the adjusting screw; clockwise rotation increases frequency from 100 to 500 Hz.

Electronic feed regulator	
Regulator ordering code	R933003290
Supply voltage	12-30 VDC
Control Signal	0-10 VDC
Max. output current	2 A
Minimum output current	0....0.6 A
Ramp adjustment up/down	0.1....10 s
PWM Frequency adjustment (pre-set 120 Hz)	100....500 Hz
Ambient operating temperature	-10....+60 °C *(14....+140 °F)*
Weight	0.12 kg *(26.4 lbs)*
Electromagnetic compatibility	EN50081-1/2EN61000-4-2/3/4/5/6
Potentiometer resistance	5....10 κ Ω

Modular directional valves

Directional valve elements, EDD series

Designation	Description	Ports/Size	Code	Data sheet	Page
4/3 - 4/2 Directional valve elements with or without secondary relief valves, and with or without LS connections	EDD-XZ	G 1/2 - SAE 10 / Size 8	D8_5_	18301-12	609

4/3 and 4/2 on-off directional valve elements with or without secondary relief valves and with or without LS connections

D8_5... (EDD-XZ)

Size 8
Series 00
Maximum pressure (pump side) 310 bar (4500 psi)
Maximum pressure (actuator side) 380 bar (5500 psi)
Maximum flow 80 l/min (21.1 gpm)
Port connections G 1/2 - SAE10 - Flangeable

General specifications

Valve elements with solenoid operated directional spool.
Control spools directly operated by solenoids with removable coils.
In the de-energized condition, the control spool is held in the central position by return springs.
Wet pin tubes for DC coils, with push rod for mechanical override; zinc plated surface.
Coils can be rotated 180° around the tube; they can be energized by AC current throught special connection with rectifier (RAC).
Manual override (push-button, screw type) available as option.
Different plug-in connectors available: see ordering details.

Contents

Ordering details	2
Functional description	4
Technical data	5
Characteristic curves	7
External dimensions and fittings	8
Electric connection	10

RF 1030 - 12/02 2010, Bosch Rexroth AG

Ordering details

01	02	03	04	05	06	07	08	09	10		11
D	**8**		**5**							**0**	

Family

01	Directional Valve elements EDD	**D**

Type

02	Size 8	**8**

Configuration

03	Standard	**0**
	With channels for Load Sens.	**4**

Coil type

04	C48	**5**

Spool variants[1)]

05	4/3 operated on both sides a and b	**_ 2 _ _**
	4/2 operated on side a only	**_ 3 _ _**
	4/2 operated on side b only	**_ 4 _ _**

Voltage supply

		31	07	03	01	00	
06	Without coil	–	–	–	–	–	**00**
	12V DC	●	●	●	●	–	**OB**
	13V DC	–	●	–	●	–	**AD**
	24V DC	●	●	●	●	–	**OC**
	27V DC	–	●	–	●	–	**AC**
	48V DC	–	–	–	●	–	**OD**
	24V AC (21.5 DC)	–	–	–	●	–	**OV**
	110V AC (98 DC)	–	–	–	●	–	**OW**
	230V AC (207 DC)	–	–	–	●	–	**OZ**

Electric connections

07	Without coils	**00**
	With coils, without mating connector DIN EN 175301-803	**01** [4)]
	With coils, with bi-directional diode, without mating connector vertical Amp-Junior	**03**
	With coils, with bi-directional diode, without mating connector DT04-2P	**07**
	With coils and bipolar sheathed lead 350mm (13,8 in) long	**31**

Ports

08	G 1/2 DIN 3852	**2**
	SAE 10	**D**
	Flangeable (A-B-T)	**M**

Secondary valve on A port [2)]

09	Without secondary valve	**0**
	Anti-cavitation function valve VUM	**1** [5)]
	Relief direct acting valve with anti-cavitation function VMA[3)] (for setting see table below)	**–**

Secondary valve on B port [2)]

10	Without secondary valve	**0**
	Anti-cavitation function valve VUM	**1** [5)]
	Relief direct acting valve with anti-cavitation function VMA[3)] (for setting see table below)	**–**

Options

11	No options	**No code**
	Push-button type manual override	**0P**
	Screw type manual override	**0F**

● = Available – = Not available

Symbols

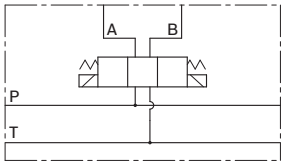

= 0

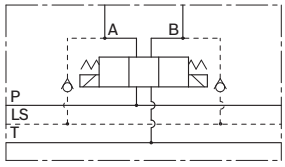

= 4

Secondary valves possible configurations

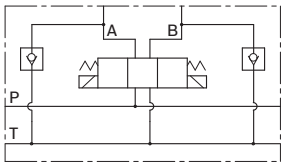

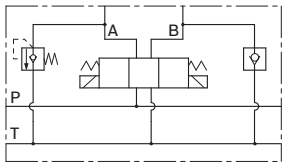

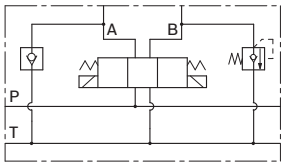

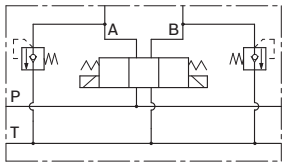

Flangeable version =M

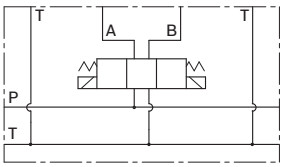

A	B	C	D	E	F	G	H	I	J	K	L
20 bar	30 bar	40 bar	50 bar	60 bar	70 bar	80 bar	90 bar	100 bar	110 bar	120 bar	130 bar
290 psi	435 psi	580 psi	725 psi	870 psi	1015 psi	1160 psi	1305 psi	1450 psi	1595 psi	1740 psi	1885 psi

M	N	O	P	Q	R	S	T	U	V	W	X
140 bar	150 bar	160 bar	170 bar	180 bar	190 bar	200 bar	210 bar	220 bar	230 bar	240 bar	250 bar
2030 psi	2175 psi	2320 psi	2465 psi	2611 psi	2756 psi	2901 psi	3046 psi	3191 psi	3336 psi	3481 psi	3626 psi

1) The required hydraulic symbol and spool variant can be chosen by consulting page 2.
2) The use of the secondary valve in one ports implies the use of secondary valve in both ports.
3) The relief direct acting valve have a maximum flow capacity of 30 l/min (7.93 gpm).
For the characteristic curves see data sheet RE18329-11.
4) For connectors ordering code see data sheet RE 18325-90.
5) For the Characteristic curves see data sheet RE18329-51.

Spool variant

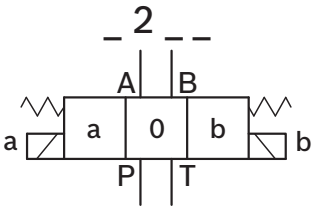

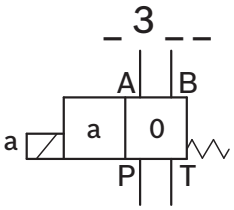

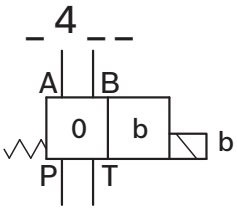

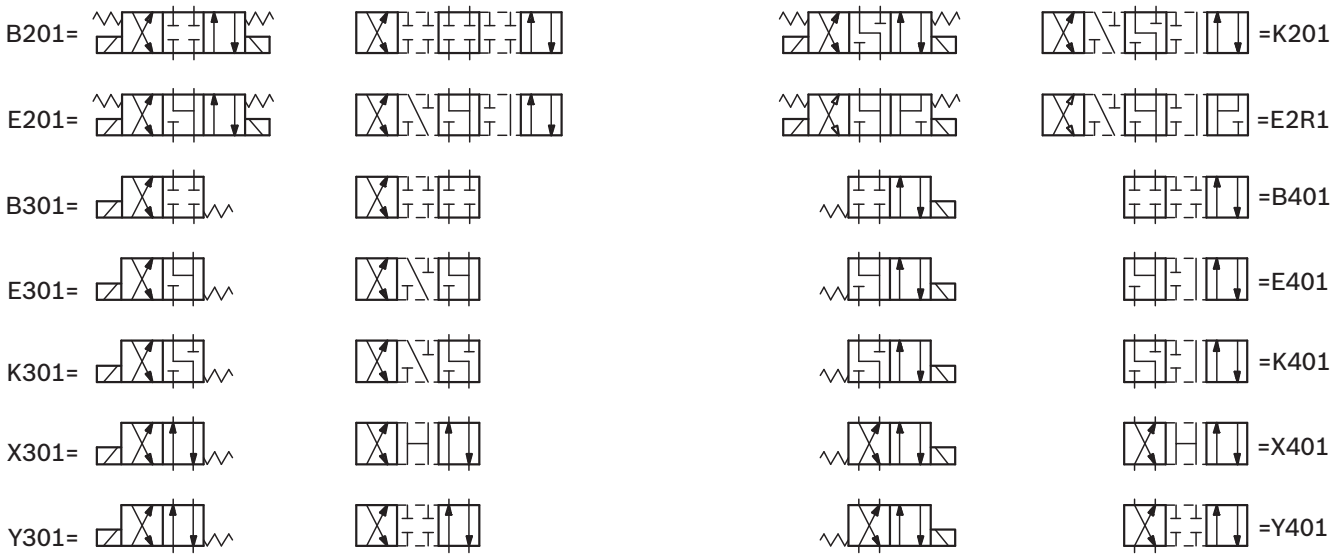

2

Functional description

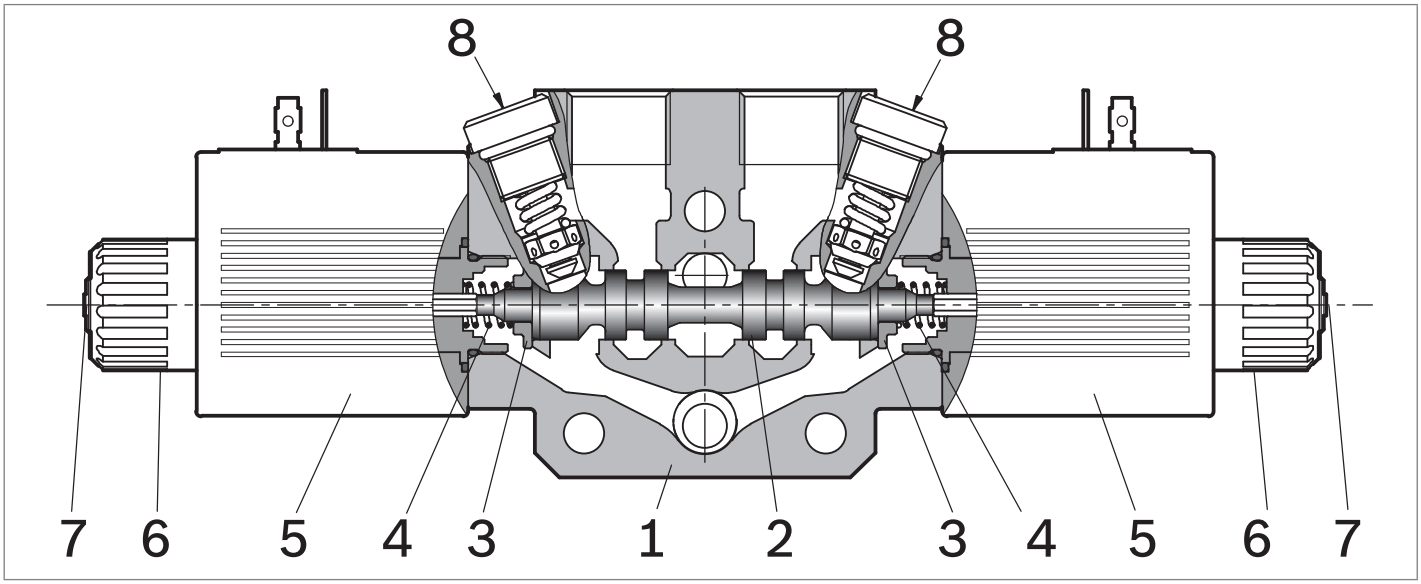

The sandwich plate design directional valve elements D8_5 are compact direct operated solenoid valves which control the start, the stop and the direction of the oil flow. These elements basically consist of a stackable housing (**1**) with a control spool (**2**), one or two solenoids (**5**), and one or two return springs (**4**). The spring chambre are connected to the tank port. When the coil is energized, the spool (**2**) travels and oil is pushed to tank from one of the spring chambers: if the cross section of the orifices changes, the switching time changes as well. Three orifice sizes are available: smaller orifice results in longer switching time, even though the actual time is dependent upon pressure, flow and viscosity.When energized, the force of the solenoid (**5**) pushes the control spool (**2**) from its neutral-central position to the required position, and the required flow from P to A (with B to T), or P to B (with A to T) is achieved. Once the solenoid is de-energized, the return spring (**4**) pushes the spool thrust washer (**3**) back against the housing and the spool returns in its neutral-central position. Each coil is fastened to the solenoid tube by a ring nut (**6**). A pin (**7**) allows to push the spool (**2**) in emergency conditions, when the solenoid cannot be energized, like in case of voltage shortage. The secondary cartridge valves are designed for quick response and stable pressure control (**8**); they also incorporate a reverse flow check for anti-cavitation.

Technical data

General									
Valve element with 2 solenoids	kg (lbs)	3.00 (6.61)							
Valve element with 1 solenoid	kg (lbs)	2.35 (5.18)							
Ambient Temperature	°C (°F)	–20....+50 (-4....+122) (NBR seals)							
Hydraulic									
Maximum pressure at P	bar (psi)	310 (4500)							
Maximum pressure at A and B ports	bar (psi)	380 (5500)							
Maximum pressure at T	bar (psi)	250 (3625)							
Maximum inlet flow	l/min (gpm)	80 (21.1)							
Hydraulic fluid General properties: it must have physical lubricating and chemical properties suitable for use in hydraulic systems such as, for example:		Mineral oil based hydraulic fluids HL (DIN 51524 part 1). Mineral oil based hydraulic fluids HLP (DIN 51524 part 2). For use of environmentally acceptable fluids (vegetable or polyglycol base) please consult us.							
Fluid Temperature	°C (°F)	–20....+80 (-4....+176) (NBR seals)							
Permissible degree of fluid contamination		ISO 4572: $\beta_x \geq 75$ X=12...15 ISO 4406: class 20/18/15 NAS 1638: class 9							
Viscosity range	mm^2/s	5....420							
Electrical									
Voltage type		DC (AC only with RAC connection)							
Voltage tolerance (nominal voltage)	%	-10 .... +10							
Duty		Continuous, with ambient temperature ≤ 50°C (122°F)							
Coil wire temperature not to be exceeded	°C (°F)	150 (302)							
Insulation class		H							
Compliance with		Low Voltage Directive LVD 73/23/EC (2006/95/EC), 2004/108/EC							
Coil weight with connection EN 175301-803	kg (lbs)	0.5 (1.1)							
Voltage	V	12	13	24	27	48	24 +RAC (21,5)	110 +RAC (98)	230 +RAC (207)
Voltage type		DC	DC	DC	DC	DC	AC	AC	AC
Power consumption	W	36	36	36	36	36	36	36	36
Nominal 100% current	A	3.00	2.77	1.53	1.32	0.75	1.70	0.37	0.17
Coil resistance (nominal at 20°C (68°F))	Ω	3.97	4.68	15.67	20.42	63.6	12.61	261	1163

Note
For applications with different specifications consult us

Code	Voltage [V]	Connector type	Coil description	Marking	Coil Mat no.
OB 01	12 DC	EN 175301-803 (Ex. DIN 43650)	C4801 12DC	12 DC	R933000063
OB 03	12 DC	AMP JUNIOR	C4803 12DC	12 DC	R933000065
OB 07	12 DC	DEUTSCH DT 04-2P	C4807 12DC	12 DC	R933000068
OB 31	12 DC	Cable 350 mm long	C4831 12DC	12 DC	R933000064
AD 01	13 DC	EN 175301-803 (Ex. DIN 43650)	C4801 13DC	13 DC	R933000069
AD 07	13 DC	DEUTSCH DT 04-2P	C4807 13DC	13 DC	R933000073
OC 01	24 DC	EN 175301-803 (Ex. DIN 43650)	C4801 24DC	24 DC	R933000076
OC 03	24 DC	AMP JUNIOR	C4803 24DC	24 DC	R933000071
OC 07	24 DC	DEUTSCH DT 04-2P	C4807 24DC	24 DC	R933000075
OC 31	24 DC	Cable 350 mm long	C4831 24DC	24 DC	R933000070
AC 01	27 DC	EN 175301-803 (Ex. DIN 43650)	C4801 27DC	27 DC	R933000077
AC 07	27 DC	DEUTSCH DT 04-2P	C4807 27DC	27 DC	R933000074
OD 01	48 DC	EN 175301-803 (Ex. DIN 43650)	C4801 48DC	48 DC	R933000078
OV 01	24 RAC	EN 175301-803 (Ex. DIN 43650)	C4801 21.5DC	21.5 DC	R933000079
OW 01	110 RAC	EN 175301-803 (Ex. DIN 43650)	C4801 98DC	98 DC	R933000080
OZ 01	230 RAC	EN 175301-803 (Ex. DIN 43650)	C4801 207DC	207 DC	R933000081

Characteristic curves

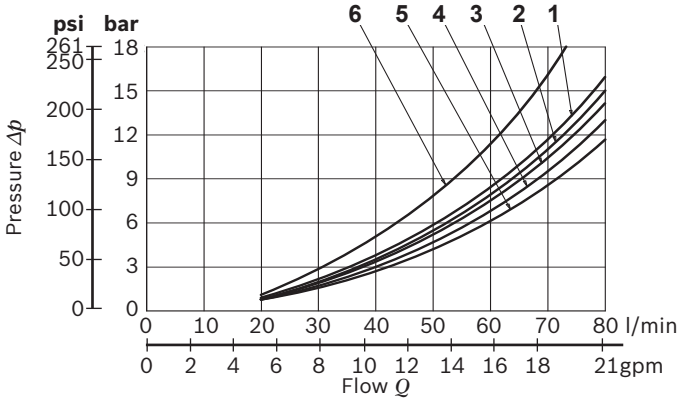

Spool Variant	Curve no.			
	P>A	P>B	A>T	B>T
B201 - B301 - B401	4	4	4	4
E201 - E301 - E401	3	3	5	5
K201 - K301 - K401	3	3	5	2
E2R1	3	6	5	-
X301 - X401	2	2	5	5
Y301 - Y401	2	2	1	1

Measured with hydraulic fluid ISO-VG32 at 45° ±5 °C (113° ±9 °F); ambient temperature 20 °C (68 °F).

Performance limits

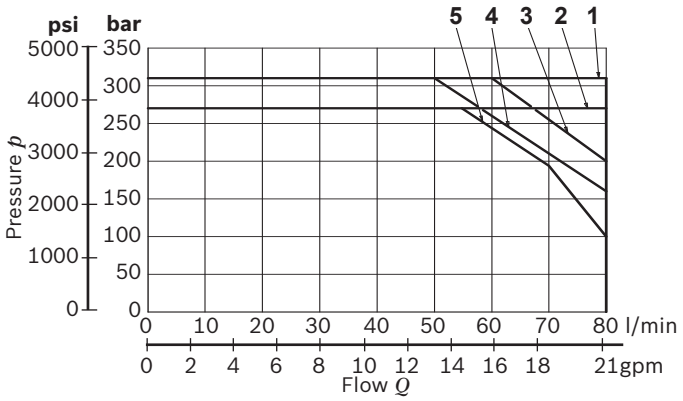

Spool Variant	Curve no.
B201 - B301 - B401	1
E201 - E301 - E401	4
K201 - K301 - K401	3
E2R1	3
X301 - X401	2
Y301 - Y401	5

The performance curves are measured with flow going across and coming back, like P>A and B>T, with symmetrical flow areas.
In case of special circuit connections, the performance limits can change.

External dimensions and fittings

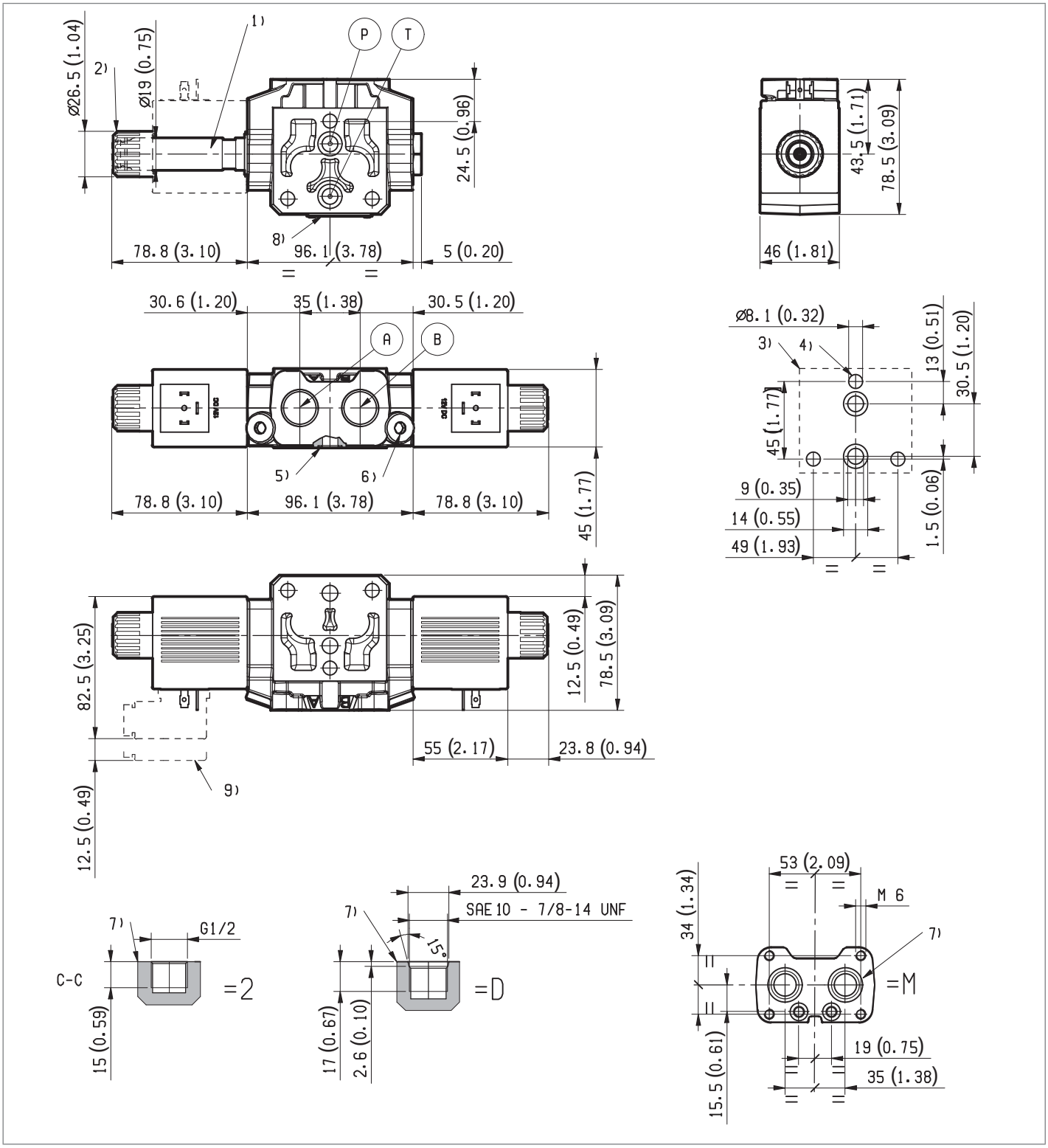

1 Solenoid tube Ø 19mm (0.75 inch).
2 Ring nut for coil locking (Ø 26,5mm); torque 5 Nm ± 10% (3.68 ± 10% ft-lb).
3 Flange specification for coupling to ED intermediate elements.
4 For tie rod and tightening torque information see data sheet RE 18301-90.
5 O-Rings for P and T ports.
6 Secondary Pressure relief valve, hex 6mm (0.236 inch), torque 25-30 Nm (19-22 ft-lb).
7 A and B ports.
8 Identification label.
9 Clearance needed for connection removal.

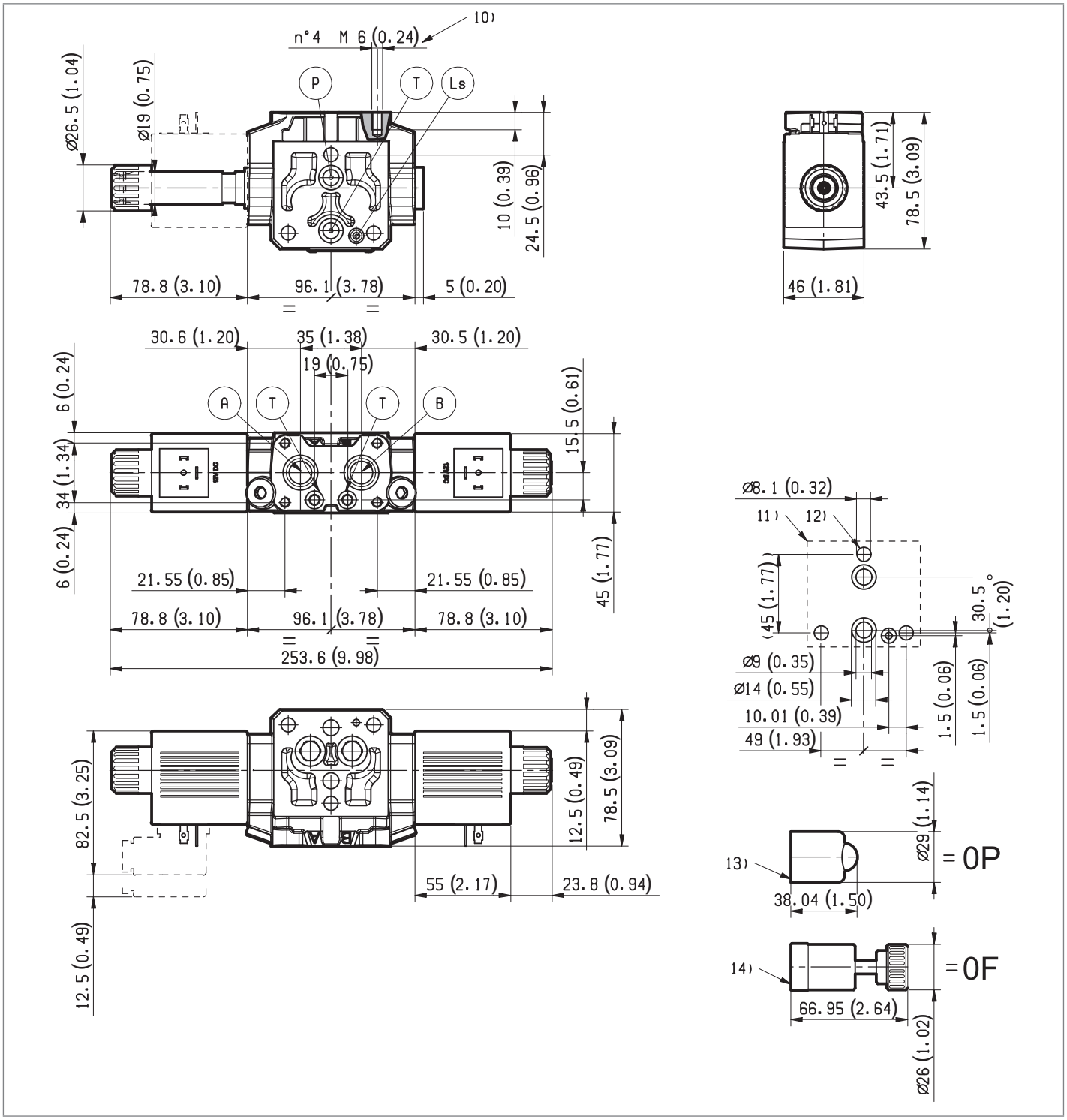

10 Four threaded M6 for fitting secondary flangeable elements. Bolts M6 with minimum recommended strength class DIN8.8. Torque 9-10 Nm (6.6-7.4 ft-lb).

11 Flange specification for coupling to the ED intermediate elements with LS channels.

12 For tie rod and tightening torque information see data sheet RE 18301-90.

13 Optional push-button manual override, 0P type, for spool opening: it is pressure stuck to the ring nut for coil locking. Mat no R933000043.

14 Optional screw manual override, 0F type, for spool opening: it is screwed (torque 6-7 Nm (4.4-5.2 ft-lb)) to the tube as replacement of the coils ring nut. Mat no. R933000022.

Electric connection

00

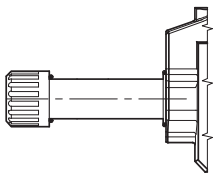

01

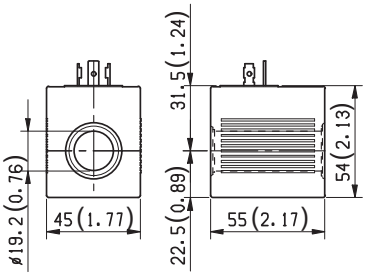

03 Protection class: IP 65 with female connector properly fitted (see drawing). With bi-directional diode

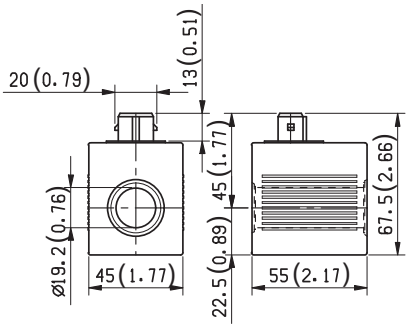

07 Protection class: IP 69 K with female connector properly fitted (see drawing). With bi-directional diode

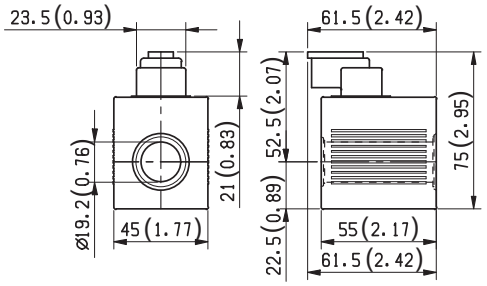

31 With bi-directional diode

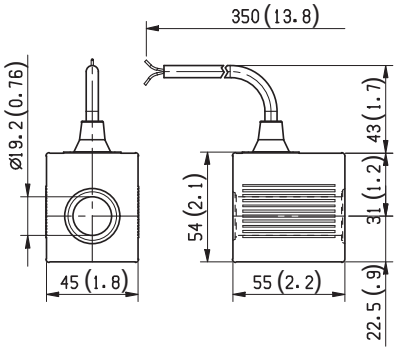

Modular directional valves

Directional valve elements, EDC series (LUDV concept)

Designation	Description	Ports/Size	Code	Data sheet	Page
4/3 and 4/2 Proportional directional valve elements with flow sharing control (LUDV concept)	EDC-P	G 3/8 - G 1/2 - SAE8 and Modular / Size 6	L8580_	18301-09	621
4/3 and 4/2 on-off directional valve elements with flow sharing control (LUDV concept)	EDC-Z	G 3/8 - SAE8 and Modular / Size 6	L8510_	18301-10	631
4/3 and 4/2 on-off directional valve elements with flow sharing control (LUDV concept)	EDC-DZ	G 1/2 - SAE 8 and Modular / Size 6	L8511_	18301-11	641
4/3 Proportional directional valve elements with proportional hydraulic control and flow sharing control (LUDV concept)	EDC-IP	G 3/8 - G 1/2 - SAE8 and Modular / Size 6	L85P5_	18301-14	651
4/3 Directional valve elements with manual lever operated control and with flow sharing control (LUDV concept)	EDC-LV	G 3/8 - G 1/2 - SAE8 and Modular / Size 6	L85L1_	18301-17	659

4/3 and 4/2 Proportional directional valve elements with flow sharing control (LUDV concept)
PATENT PENDING

L8580... (EDC-P)

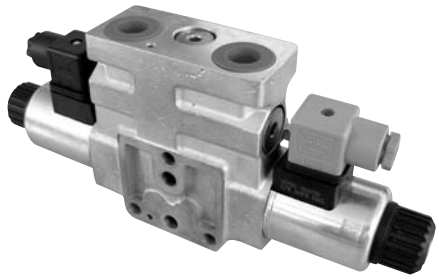

Size 6
Series 00
Maximum operating pressure 310 bar (4500 psi)
Maximum flow at 14 bar (203 psi) 50 l/min (13.2 gpm)
Maximum flow at 18 bar (261 psi) 58 l/min (15.3 gpm)
Ports connections planned G 3/8 - G 1/2 - SAE8 and Modular

General specifications

Valve element with direct proportional flow sharing control.
It can achieve the simultaneous activation of different actuators by distributing the available flow proportionally to the speeds selected by the operator.
All simultaneous movements go on at the same reciprocal speed also in case of flow shortage.
Each energized actuator receives a pressure compensated flow.
No shuttle valve fitted.
Wet pin proportional tubes for DC coils, with push rod for mechanical override; nickel plated surface.
Manual override (push-button, screw type or lever) available as option.
Different plug-in connectors available: see ordering details.

Contents

Ordering details	2
Symbols	3
Functional description	4
Technical data	5
Characteristic curves	6
External dimensions and fittings	8
Electric connection	10

RF 1580 - 09/02 2016, Bosch Rexroth AG

Ordering details

01	02	03	04	05	06	07	08	09		10
L	**8**	**5**	**80**						**0**	**_ _**

Family

01	Directional Valve elements ED	**L**

Type

02	Size 6 proportional	**8**

Configuration

03	Flow Sharing	**5**

Coil type

04	D15	**80**

Spool variants

05	4/3 operated both sides a and b; P, A, B, T closed in neutral	**B2**
	4/2 operated on side a only; P, A, B, T closed in neutral	**B3**
	4/2 operated on side b only; P, A, B, T closed in neutral	**B4**
	4/3 operated on both sides a and b; P closed; A and B to T in neutral	**E2**
	4/3 operated on side a only; P closed; A and B to T in neutral	**E3**
	4/3 operated on side b only; P closed; A and B to T in neutral	**E4**

Flow pattern & Nominal flow [1) - 4)]

06	Both meter in and out, A 4l/min(1.06gpm) - B 4l/min(1.06gpm)	**S0**
	Both meter in and out, A 8l/min(1.85gpm) - B 8l/min(1.85gpm)	**S1**
	Both meter in and out, A 12l/min(3.17gpm) - B 12l/min(3.17gpm)	**S2**
	Both meter in and out, A 16l/min(4.23gpm) - B 16l/min(4.23gpm)	**S3**
	Both meter in and out, A 25l/min(6.6gpm) - B 25l/min(6.6gpm)	**S4**
	Both meter in and out, A 40l/min(10.57gpm) - B 40l/min(10.57gpm)	**S8**
	Both meter in and out, A 50l/min(13.2gpm) - B 50l/min(13.2gpm)	**S9**
	Only meter in, A 8l/min(1.85gpm) - B 8l/min(1.85gpm) [2)]	**I 1**
	Only meter in, A 12l/min(3.17gpm) - B 12l/min(3.17gpm) [2)]	**I 2**
	Only meter in, A 25l/min(6.6gpm) - B 25l/min(6.6gpm) [2)]	**I 4**
	Only meter in, A 40l/min(10.57gpm) - B 40l/min(10.57gpm) [2)]	**I 8**
	Only meter in, A 50l/min(13.2gpm) - B 50l/min(13.2gpm) [2)]	**I 9**
	Both meter in and out, A 4l/min(1.06gpm) - B 8l/min(1.85gpm) [2)]	**01**
	Both meter in and out, A 8l/min(1.85gpm) - B 12l/min(3.17gpm) [2)]	**12**
	Both meter in and out, A 8l/min(1.85gpm) - B 16l/min(4.23gpm) [2)]	**13**
	Both meter in and out, A 12l/min(3.17gpm) - B 16l/min(4.23gpm) [2)]	**23**
	Both meter in and out, A 12l/min(3.17gpm) - B 25l/min(6.6gpm) [2)]	**24**
	Both meter in and out, A 16l/min(4.23gpm) - B 25l/min(6.6gpm) [2)]	**34**
	Both meter in and out, A 16l/min(4.23gpm) - B 40l/min(10.57gpm) [2)]	**38**
	Both meter in and out, A 25l/min(6.6gpm) - B 40l/min(10.57gpm) [2)]	**48**
	Both meter in and out, A 25l/min(6.6gpm) - B 50l/min(13.2gpm) [2)]	**49**
	Both meter in and out, A 40l/min(10.57gpm) - B 50l/min(13.2gpm) [2)]	**89**

Voltage supply

		07	03	01	00	
07	Without coil	–	–	–	●	**00**
	12V DC	●	●	●	–	**OB**
	24V DC	●	●	●	–	**OC**

Electric connections

08	Without coils	**00**
	With coils, without mating connector DIN EN 175301-803	**01** [6)]
	With coils, without mating connector vertical Amp-Junior	**03**
	With coils, without mating connector DT04-2P	**07**

Ports

09	G 3/8 DIN 3852	**0**
	G 1/2 DIN 3852	**2**
	3/4-16 UNF 2-B (SAE8)	**3**
		M [5)]

Options

10	Without manual override	**00**
	Push-button type manual override	**0P**
	Screw type manual override	**0F**
	Lever type manual override [3)]	**_ _**

● = Available – = Not available

1) The required hydraulic layout and spool variant can be chosen by consulting page 3.
2) Available only for E_ spool variant.
3) Each different option for the type of emergency chosen implies a specific ordering code (refer to page 8).
4) With Δp (P > A or P > B) 14 bar (203 psi).
5) See RE18301-45, RE18301-46, RE18301-47, for flangeable elements.
6) For connectors ordering code see data sheet RE 18325-90.

Symbols

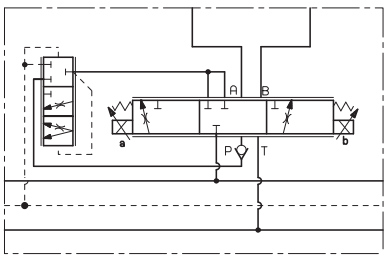

= 0
= 2
= 3

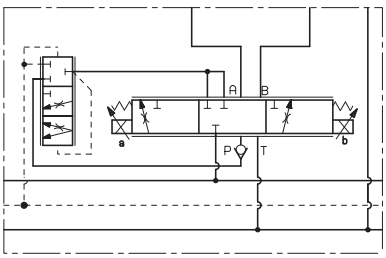

= M

Spool variant and Flow pattern

Both meter in and out

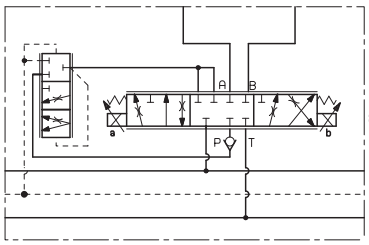

=B2

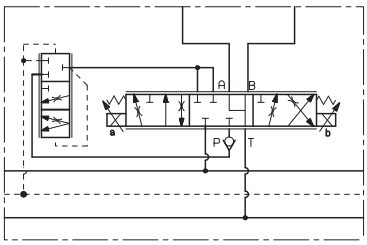

=E2

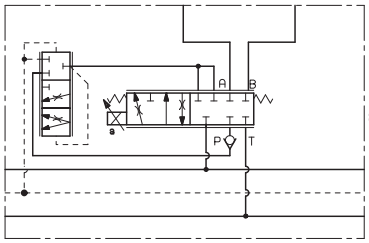

=B3

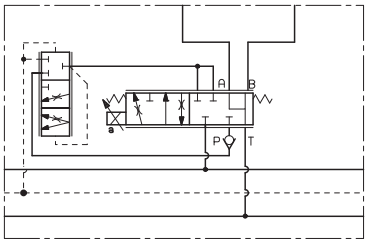

=E3

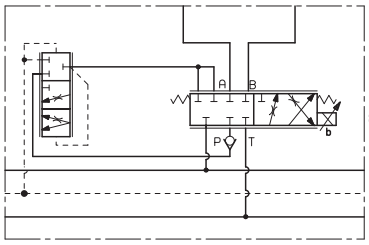

=B4

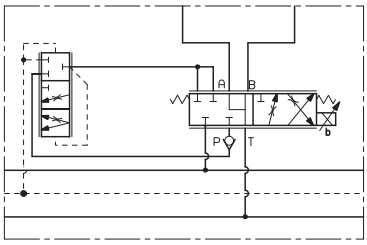

=E4

Only meter in

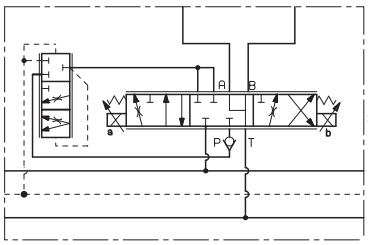

=E2I

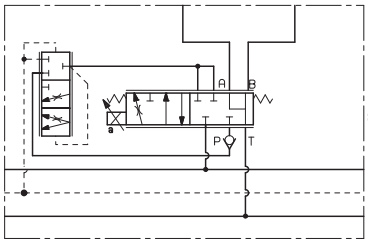

=E3I

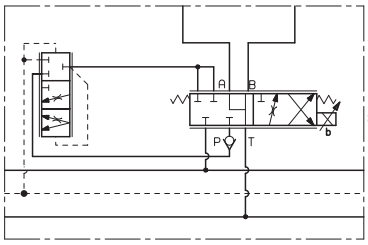

=E4I

2

Functional description

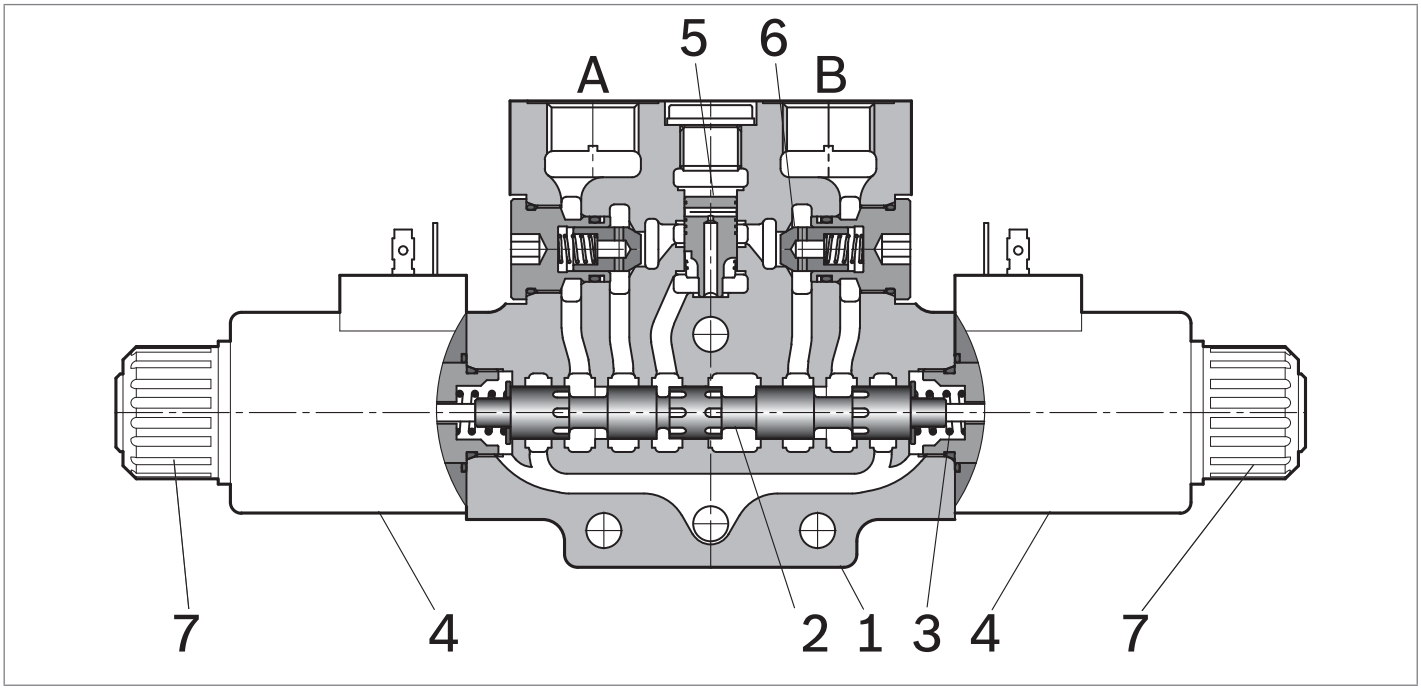

The sandwich plate design directional valve elements L8580... are compact direct operated pressure compensated proportional solenoid valves which control the start, the stop, the direction and the quantity of the oil flow, with a FLOW SHARING principle. These elements basically consist of a stackable housing (**1**) with a control spool, two solenoids (**4**), two return springs. Energized by an electronic feed regulator, each solenoid (**4**) displaces the control spool from its neutral-central position “0” proportionally to the current received. When the spool is shifted and the metering notch is open, flow delivery starts and is controlled by a 3 way pressure compensator followed by a check valve for each port A and B. The compensator, balanced by the LS pressure at the opposite end, lifts up and unloads a regulated flow which is sent to the A (or B) port through the relevant check valve; at the same time the opposite port allows oil return to tank.
LS pressure reaches the compensator “dead end” directly from the A or B port, while the check valves lock eventual pressure oscillations which could affect the compensator function.
When the solenoid is de-energized, the return spring pushes the spool thrust washer back against the housing and the spool returns in its neutral-central position.
Each coil (**4**) is fastened to the solenoid tube by the ring nut (**7**). A pin allows to push the spool under emergency conditions, when the solenoid cannot be energized, like in case of voltage shortage.

Technical data

General			
Valve element with 2 solenoids		kg (lbs)	3.95 (8.71)
Valve element with 1 solenoid		kg (lbs)	3.60 (7.91)
Ambient Temperature		°C (°F)	–20....+50 (-4....+122) (NBR seals)
Hydraulic			
Maximum pressure at P, A and B ports		bar (psi)	310 (4500)
Maximum pressure at T		bar (psi)	210 (3050)
Maximum pressure with lever emergency at T		bar (psi)	140 (2030)
Max. regulated flow at 14 bar (203 psi)		l/min (gpm)	50 (13.2)
Max. regulated flow at 18 bar (261 psi)		l/min (gpm)	58 (15.3)
Hydraulic fluid General properties: it must have physical lubricating and chemical properties suitable for use in hydraulic systems such as, for example:			Mineral oil based hydraulic fluids HL (DIN 51524 part 1). Mineral oil based hydraulic fluids HLP (DIN 51524 part 2). For use of environmentally acceptable fluids (vegetable or polyglycol base) please consult us.
Fluid Temperature		°C (°F)	–20....+80 (-4....+176) (NBR seals)
Permissible degree of fluid contamination			ISO 4572: $\beta_x \geq 75$ X=10...12 ISO 4406: class 19/17/14 NAS 1638: class 8
Viscosity range		mm^2/s	20....380 (optimal 30....46)
Electrical			
Voltage type		PWM	120 Hz
Voltage tolerance (nominal voltage)		%	-10 .... +10
Duty			Continuous, with ambient temperature ≤ 50°C (122°F)
Coil wire temperature not to be exceeded		°C (°F)	150 (302)
Insulation class			H
Compliance with			Low Voltage Directive LVD 73/23/EC (2006/95/EC), 2004/108/EC
Coil weight		kg (lbs)	0.335 (0.739)
Voltage		V	12 24
Nominal 100% current		A	1.76 0.88
Coil resistance (nominal at 20°C (68°F))	- Cold value	Ω	4 16
	- Max. hot value	Ω	6.1 24.4

Note
For applications with different specifications consult us

Code	Voltage [V]	Connector type	Coil description	Marking	Coil Mat no.
=OB 01	12 DC	EN 175301-803 (Ex. DIN 43650)	D15 01	12 DC	R933000092
=OB 03	12 DC	AMP JUNIOR	D1530	12 DC	R933002877
=OB 07	12 DC	DEUTSCH DT 04-2P	D15 07	12 DC	R933000094
=OC 01	24 DC	EN 175301-803 (Ex. DIN 43650)	D15 01	24 DC	R933000093
=OC 03	24 DC	AMP JUNIOR	D1530	24 DC	R933003515
=OC 07	24 DC	DEUTSCH DT 04-2P	D15 07	24 DC	R933002798

Characteristic curves

Characteristic curves Q=Q (I)

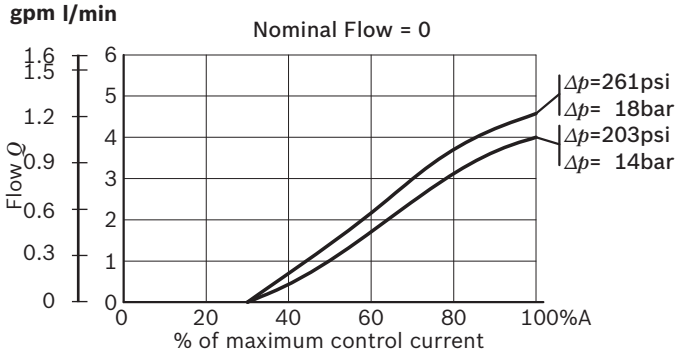

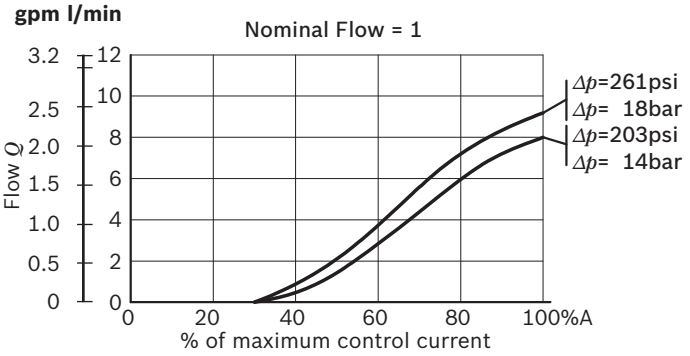

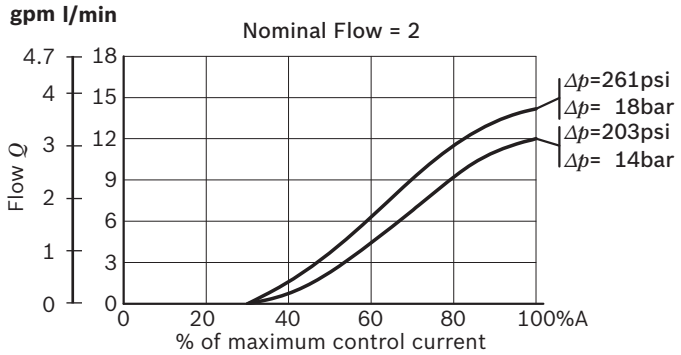

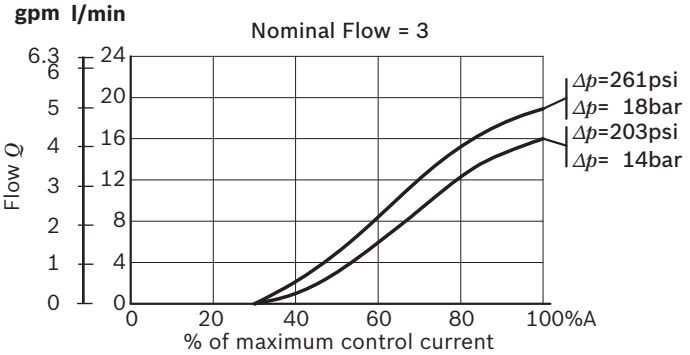

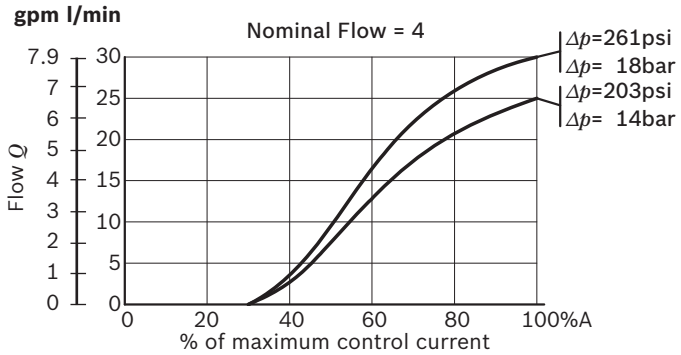

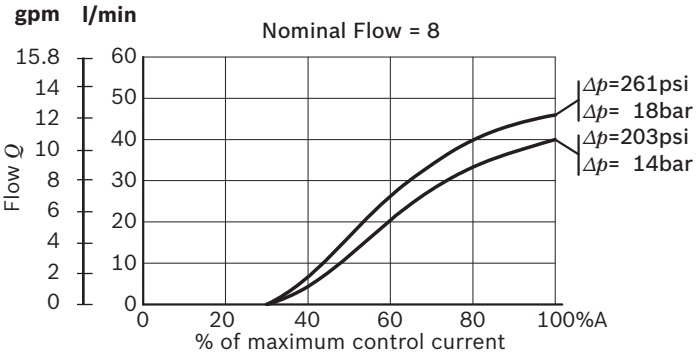

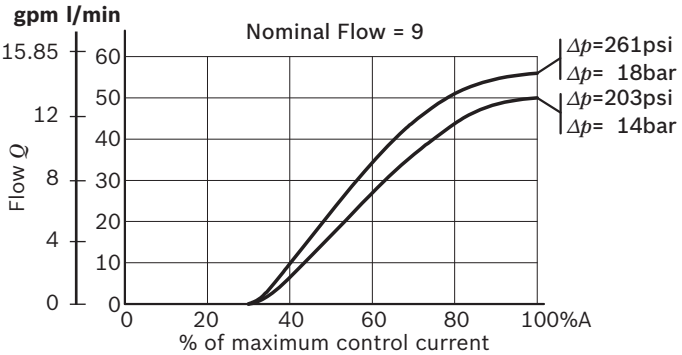

The curves refer to the spool fully open.
Measured with hydraulic fluid ISO-VG32 at 45° ±5 °C (113° ±9 °F); ambient temperature 20 °C (68 °F).

Nominal flow Qnom=Qnom (ΔP ls)

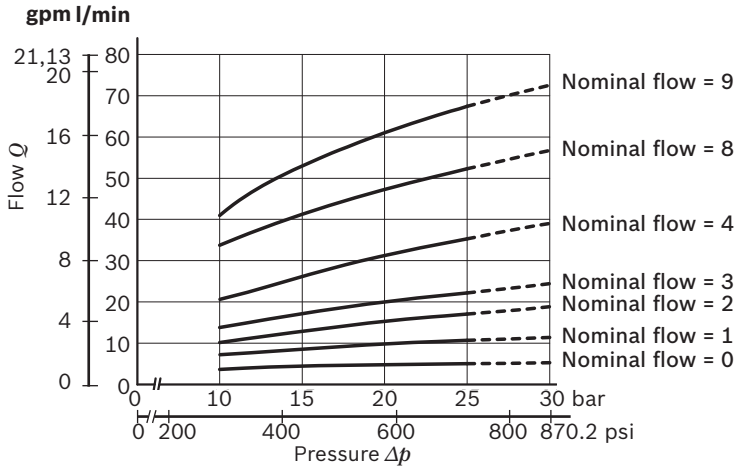

Pressure differential across the spool (ΔPls)

LS drain

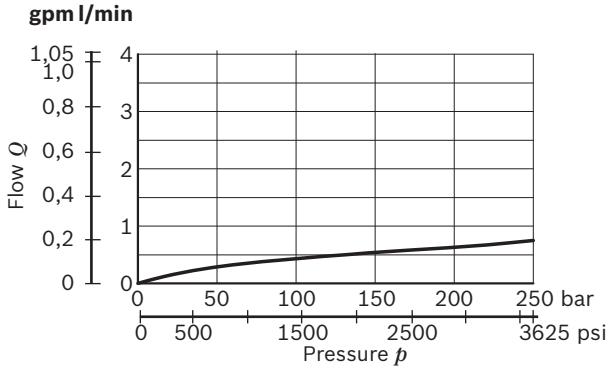

Pressure drop Δp = Δp(Q) (P_{IN}- P_{OUT}) to the next section

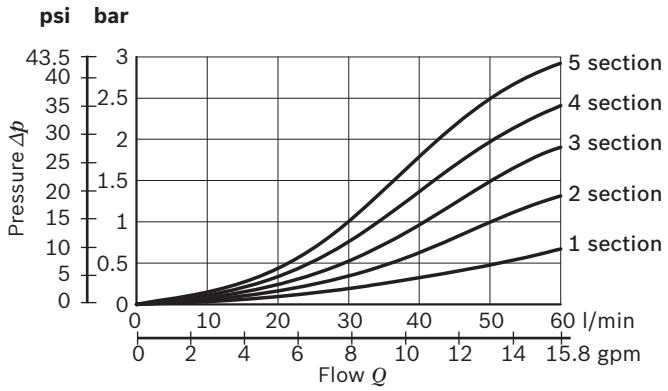

Pressure drop Δp = Δp(Q) with spool B2S9

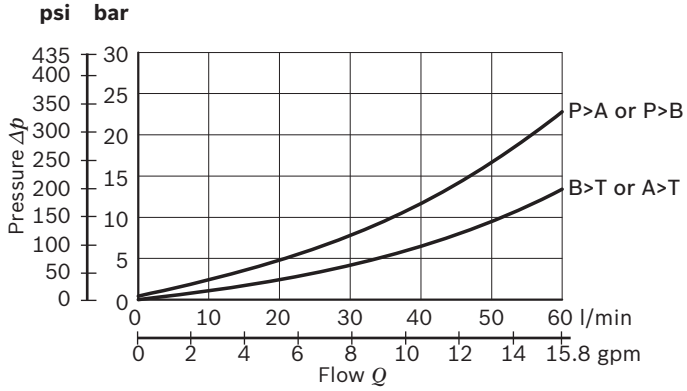

The curves refer to the spool fully open.
Measured with hydraulic fluid ISO-VG32 at 45° ±5 °C (113° ±9 °F); ambient temperature 20 °C (68 °F).

External dimensions and fittings

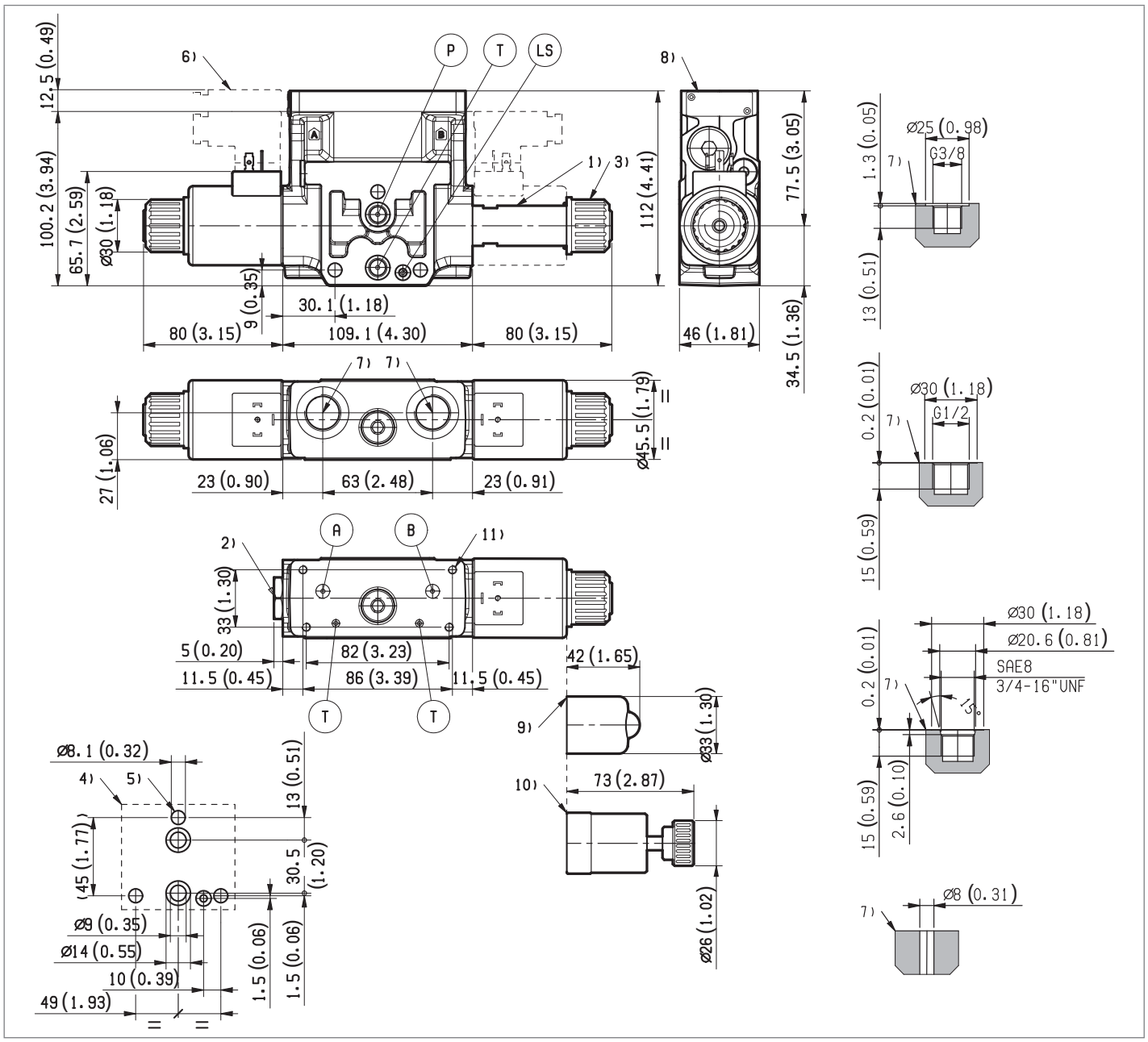

1 Solenoid tube Ø 23 mm (0.91 inch).
2 Plug for 2 positions versions (4/2).
3 Ring nut for coil locking (Ø 30.3 mm).
Torque 6 – 7 Nm (4.4 – 5.2 ft-lb).
4 Flange specifications for coupling to ED intermediate elements.
5 For tie rod and tightening torque information see data sheet RE 18301-90.
6 Clearance needed for connector removal.
7 A and B ports.
8 Identification label.
9 Optional push-button manual override, 0P type, for spool opening: it is pressure stuck to the ring nut for coil locking.
Mat no. R933003289.
10 Optional screw type manual override, 0F type, for spool opening: it is screwed (torque 6-7 Nm (4.4-5.2 ft-lb)) to the tube as replacement of the coil ring nut. Mat no. R933003116.
11 Four threaded holes M5 deepth 12mm (0.47 inch) for fitting a secondary flangeable element. Bolts M5 with recommended strength class DIN8.8: torque 5-6 Nm (3.6-4.4 ft-lb) (only for version with modular secondary valves).

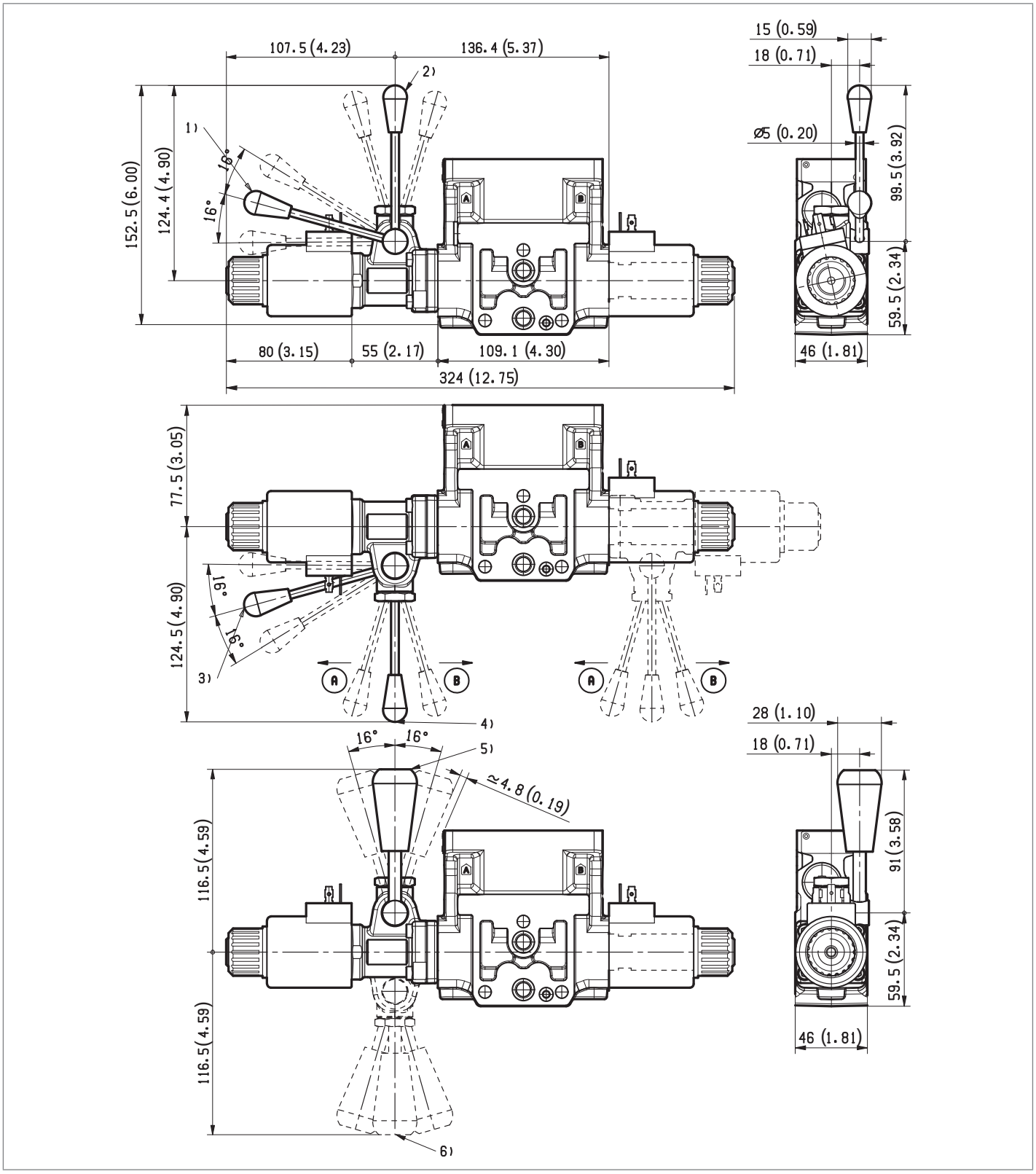

1 Ordering Details: HA (if fitted to side A) or HB (if fitted to side B)
2 Ordering Details: VA (if fitted to side A) or VB (if fitted to side B)
3 Ordering Details: H1 (if fitted to side A) or H9 (if fitted to side B)
4 Ordering Details: V1 (if fitted to side A) or V9 (if fitted to side B)
5 Ordering Details: XA (if fitted to side A) or XB (if fitted to side B)
6 Ordering Details: X1 (if fitted to side A) or X9 (if fitted to side B)

Dimensions [mm (inches)]

Electric connection

01 Protection class: IP 65 when connector with seal is properly screwed down.

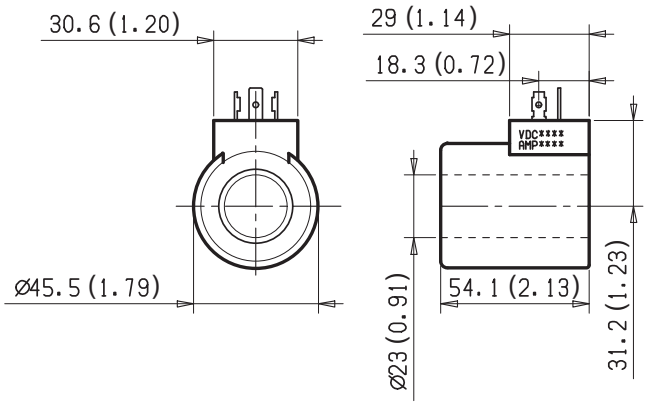

03 Protection class: IP 65 with female connector properly fitted (see drawing).

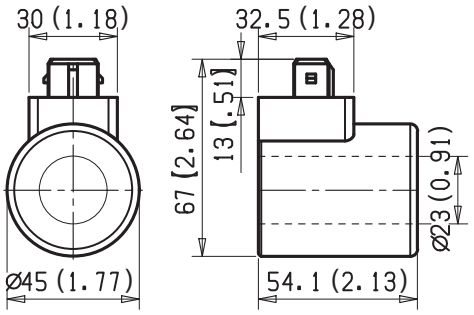

07 Protection class: IP 69 K with female connector properly fitted (see drawing).

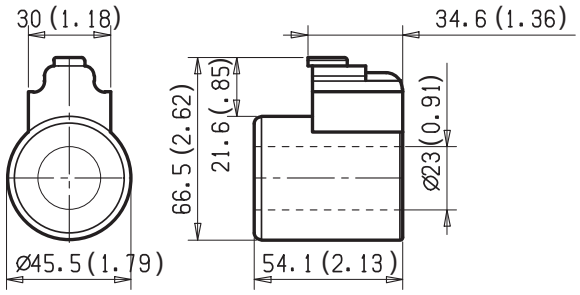

4/3 and 4/2 on-off directional valve elements with flow sharing control (LUDV concept)
PATENT PENDING

L8510... (EDC-Z)

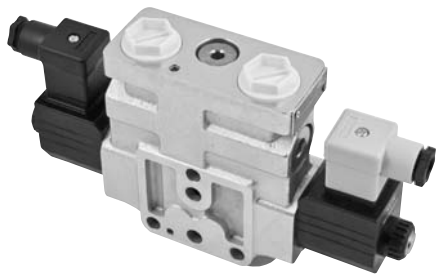

Size 6
Series 00
Maximum operating pressure 310 bar (4500 psi)
Maximum flow at 14 bar (203 psi) 23.5 l/min (6.2 gpm)
Maximum flow at 18 bar (261 psi) 26.5 l/min (7 gpm)
Ports connections G 3/8 - SAE8 and Modular

General specifications

Valve element with direct on-off flow sharing control.
It can achieve multiple simultaneous manoeuvres by distributing the available flow to each actuator selected by the operator, independently from the working pressure required.
All simultaneous movements go on at the same reduced speed in case of flow shortage.
Each energized actuator receives a pressure compensated flow.
No shuttle valve fitted.
Control spools directly operated by screwed-in solenoids with removable coils.
Wet pin tubes for DC coils, with push rod for mechanical override; nickel plated surface.
Manual override (push-button, screw type or lever) available as option.
Different plug-in connectors available: see ordering details.

Contents

Ordering details	2
Functional description	4
Technical data	5
Characteristic curves	7
External dimensions and fittings	8
Electric connection	10

RF 1630 - 10/02 2016, Bosch Rexroth AG

Ordering details

01	02	03	04	05	06	07	08	09		10
L	**8**	**5**	**10**						**0**	**_ _**

Family

01	Directional Valve elements ED	**L**

Type

02	Size 6 proportional	**8**

Configuration

03	Flow Sharing	**5**

Coil type

04	C36	**10**

Spool variants

05	4/3 operated both sides a and b; P, A, B, T closed in neutral	**B2**
	4/2 operated on side a only; P, A, B, T closed in neutral	**B3**
	4/2 operated on side b only; P, A, B, T closed in neutral	**B4**
	4/3 operated on both sides a and b; P closed; A and B to T in neutral	**E2**
	4/3 operated on side a only; P closed; A and B to T in neutral	**E3**
	4/3 operated on side b only; P closed; A and B to T in neutral	**E4**

Flow pattern & Nominal flow [1) - 4)]

06	Both meter in and out, A 3l/min(0.79gpm) - B 3l/min(0.79gpm)	**S0**
	Both meter in and out, A 6l/min(1.59gpm) - B 6l/min(1.59gpm)	**S1**
	Both meter in and out, A 9l/min(2.37gpm) - B 9l/min(2.37gpm)	**S2**
	Both meter in and out, A 13l/min(3.43gpm) - B 13l/min(3.43gpm)	**S3**
	Both meter in and out, A 23.5l/min(6.21gpm) - B 23.5l/min(6.21gpm)	**S4**
	Only meter in, A 6l/min(1.59gpm) - B 6l/min(1.59gpm) [2)]	**I 1**
	Only meter in, A 9l/min(2.37gpm) - B 9l/min(2.37gpm) [2)]	**I 2**
	Only meter in, A 23.5l/min(6.21gpm) - B 23.5l/min(6.21gpm) [2)]	**I 4**
	Both meter in and out, A 3l/min(0.79gpm) - B 6l/min(1.59gpm) [2)]	**01**
	Both meter in and out, A 6l/min(1.59gpm) - B 9l/min(2.37gpm) [2)]	**12**
	Both meter in and out, A 6l/min(1.59gpm) - B 13l/min(3.43gpm) [2)]	**13**
	Both meter in and out, A 9l/min(2.37gpm) - B 13l/min(3.23gpm) [2)]	**23**
	Both meter in and out, A 9l/min(2.37gpm) - B 23.5l/min(6.21gpm) [2)]	**24**
	Both meter in and out, A 13l/min(3.43gpm) - B 23.5l/min(6.21gpm) [2)]	**34**

Voltage supply		**31**	**07**	**04**	**03**	**01**	**00**	
07	Without coil	–	–	–	–	–	●	**00**
	12V DC	●	●	●	●	●	–	**OB**
	13V DC	–	●	–	–	●	–	**AD**
	24V DC	●	●	●	●	●	–	**OC**
	27V DC	–	●	–	–	●	–	**AC**
	48V DC	–	–	●	–	●	–	**OD**
	110V DC	–	–	–	–	●	–	**OE**
	24V DC (21.5 DC)	–	–	–	–	●	–	**OV**
	110V DC (98 DC)	–	–	–	–	●	–	**OW**
	230V DC (207 DC)	–	–	–	–	●	–	**OZ**

Electric connections

08	Without coils	**00**
	With coils, without mating connector DIN EN 175301-803	**01** [6)]
	With coils, with bi-directional diode, without mating connector vertical Amp-Junior	**03**
	With coils, with bi-directional diode, without mating connector horizontal Amp-Junior	**04**
	With coils, with bi-directional diode, without mating connector DT04-2P	**07**
	With coils and bipolar sheathed lead 350mm (13,8 inch) long	**31**

Ports

09	G 3/8 DIN 3852	**0**
	3/4-16 UNF 2-B (SAE8)	**3**
	Machined for interfacing to modular elements	**M** [5)]

Options

10	Without manual override	**00**
	Push-button type manual override	**0P**
	Screw type manual override	**0F**
	Lever type manual override [3)]	**_ _**

● = Available – = Not available

1) The required hydraulic layout and spool variant can be chosen by consulting page 3.
2) Available only for E_ spool variant.
3) Each different option for the type of emergency chosen implies a specific ordering code (refer to page 8).
4) With Δp (P > A or P > B) 14 bar (203 psi).
5) See RE18301-45, RE18301-46, RE18301-47, for flangeable elements.
6) For connectors ordering code see data sheet RE 18325-90.

Symbols

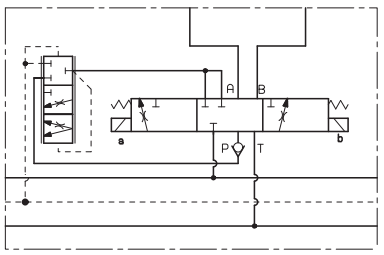

= 0
= 3

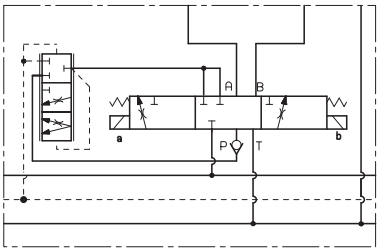

= M

Spool variant and Flow pattern

Both meter in and out

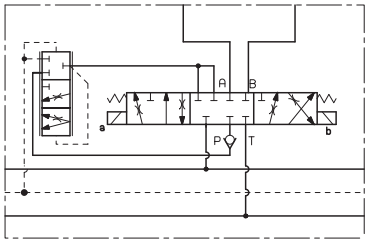

=B2

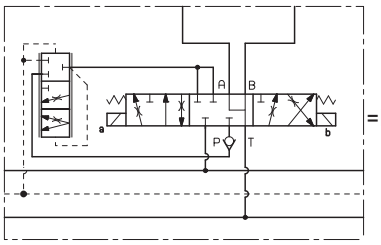

=E2

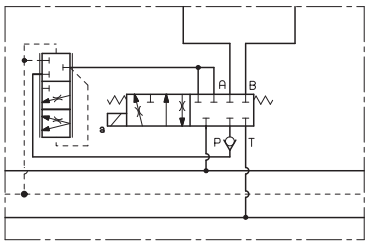

=B3

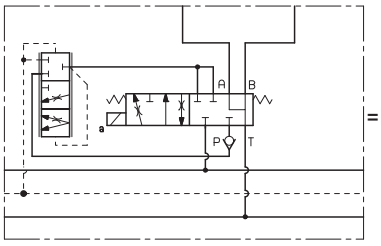

=E3

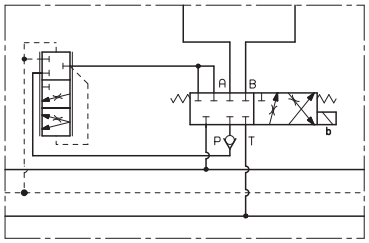

=B4

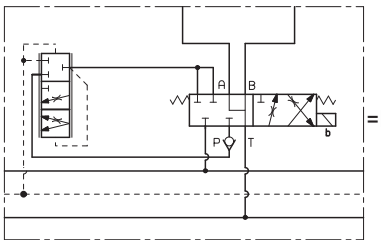

=E4

Only meter in

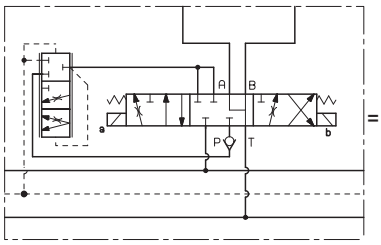

=E2I

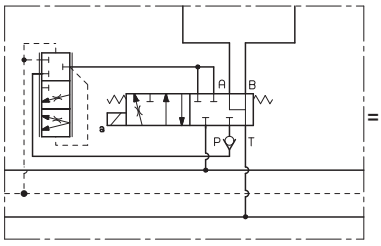

=E3I

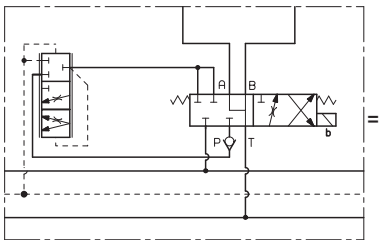

=E4I

2

Functional description

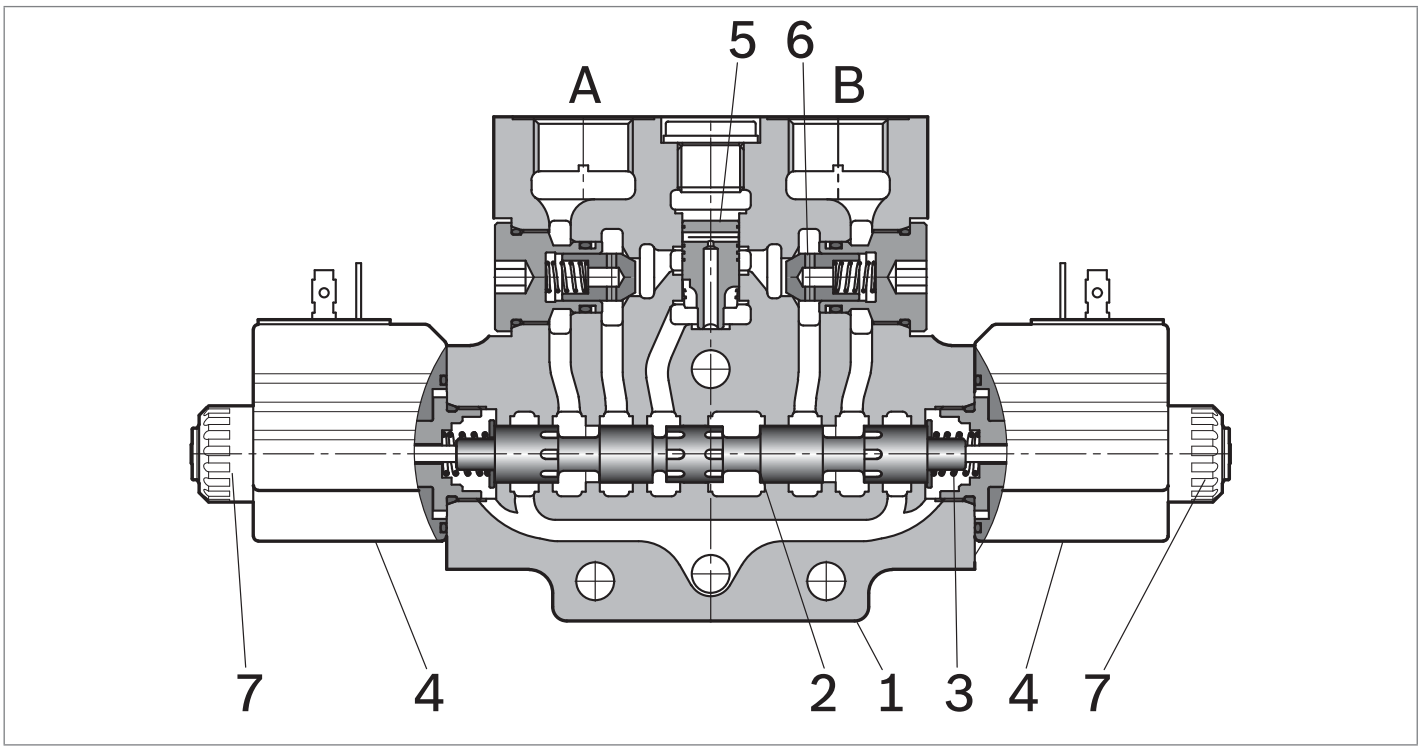

The sandwich plate design directional valve elements L8510... are compact direct operated pressure compensated solenoid valves which control the start, the stop, the direction and the quantity of the oil flow, with a FLOW SHARING principle. These elements basically consist of a stackable housing (**1**) with a control spool, two solenoids (**4**), two return springs. When energized, each solenoid (**4**) displaces the control spool from its neutral-central position “0” and the metering notches are open; flow is delivered to the 3 way pressure compensator followed by a check valve for each port A and B. The compensator, balanced by the LS pressure at the opposite end, lifts up and unloads a pressure compensated flow which is sent to the A (or B) port through the relevant check valve; at the same time the opposite port allows oil return to tank.

LS pressure reaches the compensator “dead end” directly from the A or B port, while the check valves lock eventual pressure oscillations which could affect the compensator function.

When the solenoid is de-energized, the return spring pushes the spool thrust washer back against the housing and the spool returns in its neutral-central position.

Each coil (**4**) is fastened to the solenoid tube by a ring nut (**7**). A pin allows to push the spool under emergency conditions, when the solenoid cannot be energized, like in case of voltage shortage.

Technical data

General										
Valve element with 2 solenoids	kg (lbs)	3.42 (7.54)								
Valve element with 1 solenoid	kg (lbs)	2.81 (6.19)								
Ambient Temperature	°C (°F)	–20....+50 (-4....+122) (NBR seals)								
Hydraulic										
Maximum pressure at P, A and B ports	bar (psi)	310 (4500)								
Maximum pressure at T	bar (psi)	210 (3050)								
Maximum pressure with lever emergency at T	bar (psi)	140 (2030)								
Max. regulated flow at 14 bar (203 psi)	l/min (gpm)	23,5 (6.2)								
Max. regulated flow at 18 bar (261 psi)	l/min (gpm)	26.5 (7)								
Hydraulic fluid General properties: it must have physical lubricating and chemical properties suitable for use in hydraulic systems such as, for example:		Mineral oil based hydraulic fluids HL (DIN 51524 part 1). Mineral oil based hydraulic fluids HLP (DIN 51524 part 2). For use of environmentally acceptable fluids (vegetable or polyglycol base) please consult us.								
Fluid Temperature	°C (°F)	–20....+80 (-4....+176) (NBR seals)								
Permissible degree of fluid contamination		ISO 4572: $\beta_x \geq 75$ X=12...15 ISO 4406: class 20/18/15 NAS 1638: class 9								
Viscosity range	mm^2/s	5....420								
Electrical										
Voltage type		DC (AC only with RAC connection)								
Voltage tolerance (nominal voltage)	%	-10 .... +10								
Duty		Continuous, with ambient temperature ≤ 50°C (122°F)								
Coil wire temperature not to be exceeded	°C (°F)	150 (302)								
Insulation class		H								
Compliance with		Low Voltage Directive LVD 73/23/EC (2006/95/EC), 2004/108/EC								
Coil weight	kg (lbs)	0.215 (0.44)								
Voltage	V	12	13	24	27	48	110	24 +RAC (21,5)	110 +RAC (98)	230 +RAC (207)
Voltage type		DC	DC	DC	DC	DC	DC	AC	AC	AC
Power consumption	W	26	26	26	26	26	26	29	29	29
Nominal 100% current	A	2.15	2.00	1.10	1.10	0.54	0.27	1.20	0.29	0.14
Coil resistance (nominal at 20°C (68°F))	Ω	5.5	6.5	22	28	89	413	18	338	1430

Note
For applications with different specifications consult us

Code	Voltage [V]	Connector type	Coil de
OB 01	12 DC	EN 175301-803 (Ex. DIN 43650)	C3601
OB 03	12 DC	AMP JUNIOR	C3603

OB 04	12 DC	AMP JUNIOR Horizontal	C3604 12DC	12 DC	R933002913
OB 07	12 DC	DEUTSCH DT 04-2P	C3607 12DC	12 DC	R933000048
OB 31	12 DC	Cable 350 mm long	C3631 12DC	12 DC	R933000045
AD 01	13 DC	EN 175301-803 (Ex. DIN 43650)	C3601 13DC	13 DC	R933000051
AD 07	13 DC	DEUTSCH DT 04-2P	C3607 13DC	13 DC	R933000049
OC 01	24 DC	EN 175301-803 (Ex. DIN 43650)	C3601 24DC	24 DC	R933000053
OC 03	24 DC	AMP JUNIOR	C3603 24DC	24 DC	R933000057
OC 04	24 DC	AMP JUNIOR Horizontal	C3604 24DC	24 DC	R933002914
OC 07	24 DC	DEUTSCH DT 04-2P	C3607 24DC	24 DC	R933000058
OC 31	24 DC	Cable 350 mm long	C3637 24DC	24 DC	R933000055
AC 01	27 DC	EN 175301-803 (Ex. DIN 43650)	C3601 27DC	27 DC	R933000056
AC 07	27 DC	DEUTSCH DT 04-2P	C3607 27DC	27 DC	R933000050
OD 01	48 DC	EN 175301-803 (Ex. DIN 43650)	C3601 48DC	48 DC	R933000059
OD 04	48 DC	AMP JUNIOR Horizontal	C3604 48DC	48 DC	R933002915
OE 01	110 DC	EN 175301-803 (Ex. DIN 43650)	C3601 110DC	110 DC	R933000061
OV 01	24 RAC	EN 175301-803 (Ex. DIN 43650)	C3601 21.5DC	21.5 DC	R933000054
OW 01	110 RAC	EN 175301-803 (Ex. DIN 43650)	C3601 98DC	98 DC	R933000060
OZ 01	230 RAC	EN 175301-803 (Ex. DIN 43650)	C3601 207DC	207 DC	R933000062

Characteristic curves

Nominal flow Qnom=Qnom (ΔP ls)

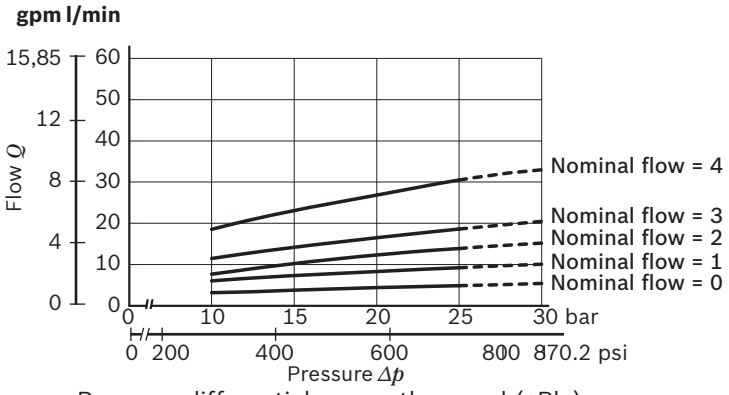

Pressure differential across the spool (ΔPls)

Performances limits

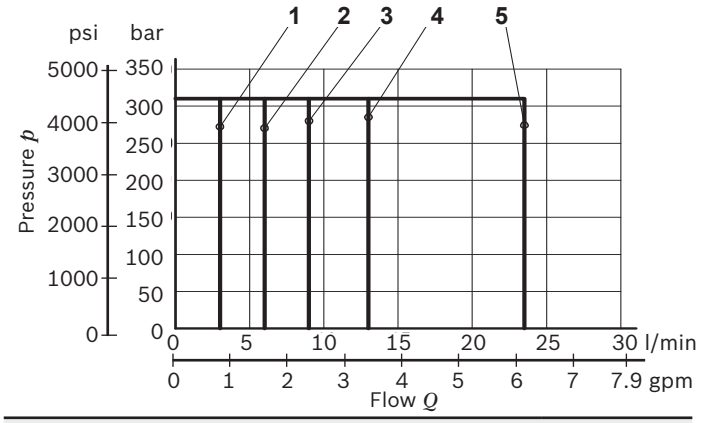

Spool Variant	Curve no.
B2S0, E2S0, B3S0, E3S0, B4S0, E4S0, B2I0, E2I0, B3I0, E3I0, B4I0, E4I0	1
B2S1, E2S1, B3S1, E3S1, B4S1, E4S1, B2I1, E2I1, B3I1, E3I1, B4I1, E4I1	2
B2S2, E2S2, B3S2, E3S2, B4S2, E4S2, B2I2, E2I2, B3I2, E3I2, B4I2, E4I2	3
B2S3, E2S3, B3S3, E3S3, B4S3, E4S3, B2I3, E2I3, B3I3, E3I3, B4I3, E4I3	4
B2S4, E2S4, B3S4, E3S4, B4S4, E4S4, B2I4, E2I4, B3I4, E3I4, B4I4, E4I4	5

The performance curves are measured with flow going across and coming back, like P>A and B>T. With “lever type” emergency control, the performance limits are slightly lower.

LS drain

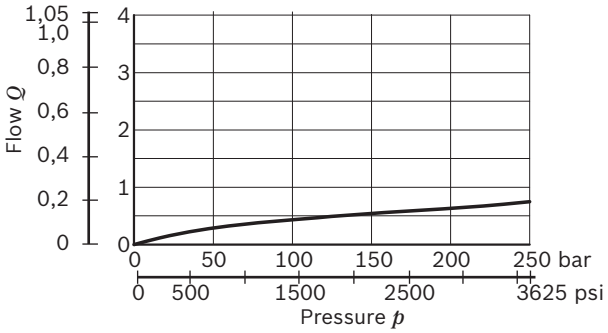

Version: pressure drop Δp = Δp(Q) (P_{IN}- P_{OUT}) to the next section

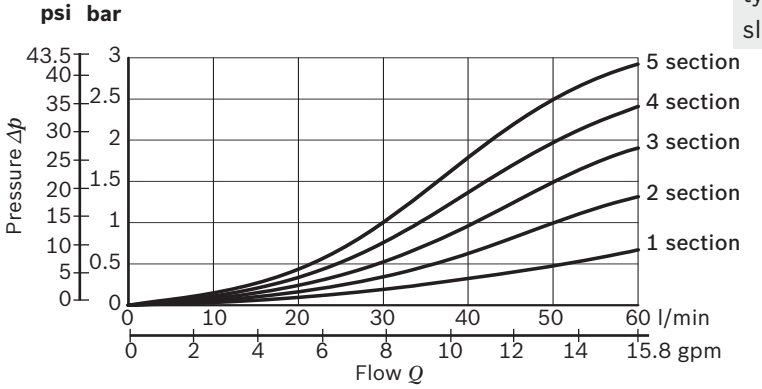

Pressure drop Δp = Δp(Q) with spool B2S4

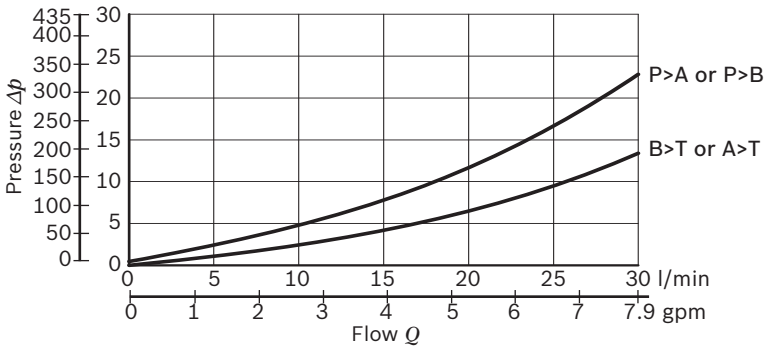

External dimensions and fittings

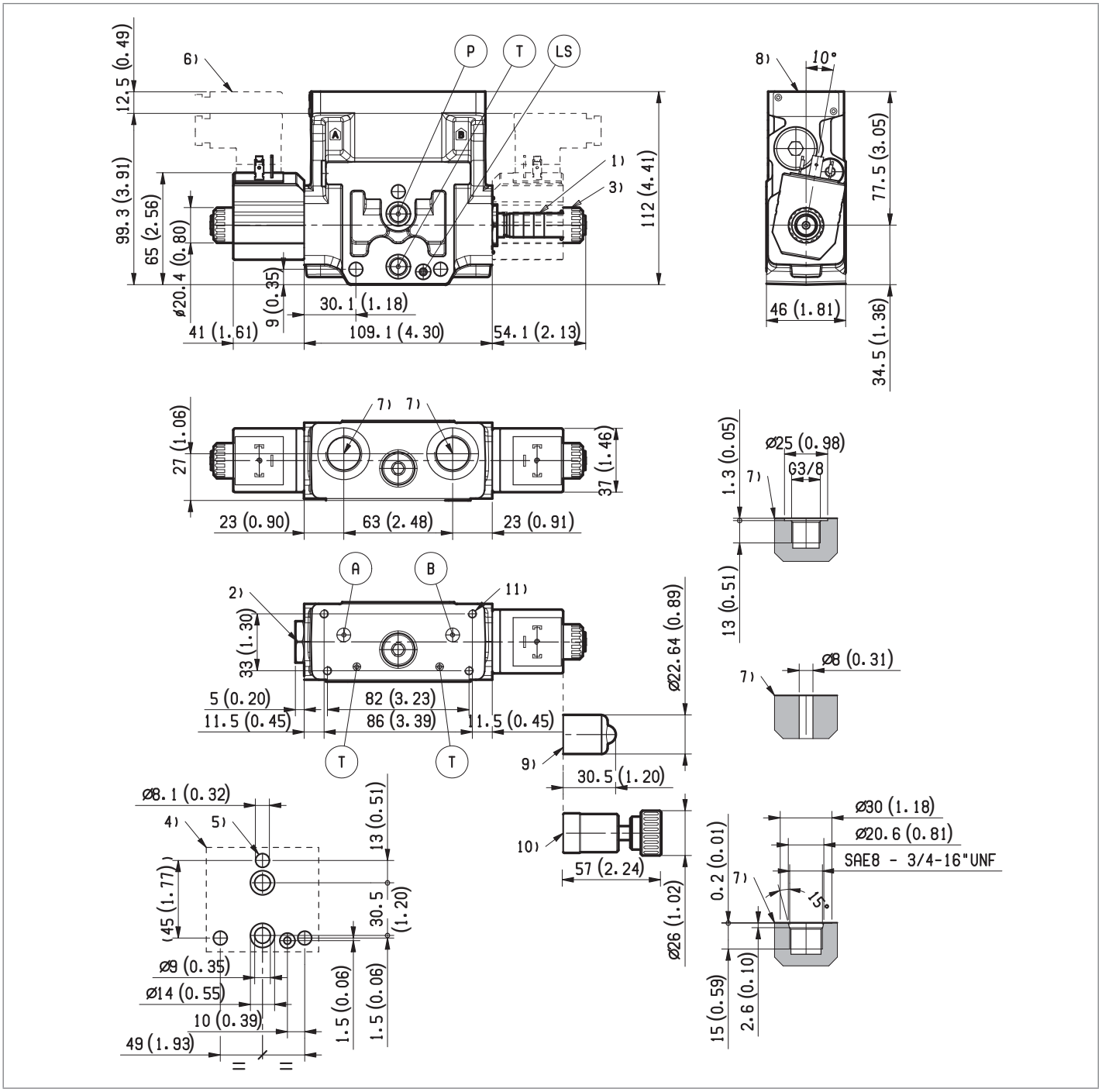

1 Solenoid tube Ø 14 mm (0.55 inch).
2 Plug for 2 positions versions (4/2).
3 Ring nut for coil locking (Ø 20.4 mm).
Torque 5-6Nm (3.6-4 4 ft-lb).
4 Flange specifications for coupling to ED intermediate elements.
5 For tie rod and tightening torque information see data sheet RE 18301-90.
6 Clearance needed for connector removal.
7 A and B ports.
8 Identification label.
9 Optional push-button manual override, 0P type, for spool opening: it is pressure stuck to the ring nut for coil locking.Mat no. R933000042.
10 Optional screw type manual override, 0F type, for spool opening: it is screwed (torque 6-7 Nm (4.4-5.2 ft-lb)) to the tube as replacement of the coil ring nut. Mat no. R933000021.
11 Four threaded holes M5 deepth 12mm (0.47 inch) for fitting a secondary flangeable element. Bolts M5 with recommended strength class DIN8.8: torque 5-6 Nm (3.6-4.4 ft-lb) (only for version with modular secondary valves).

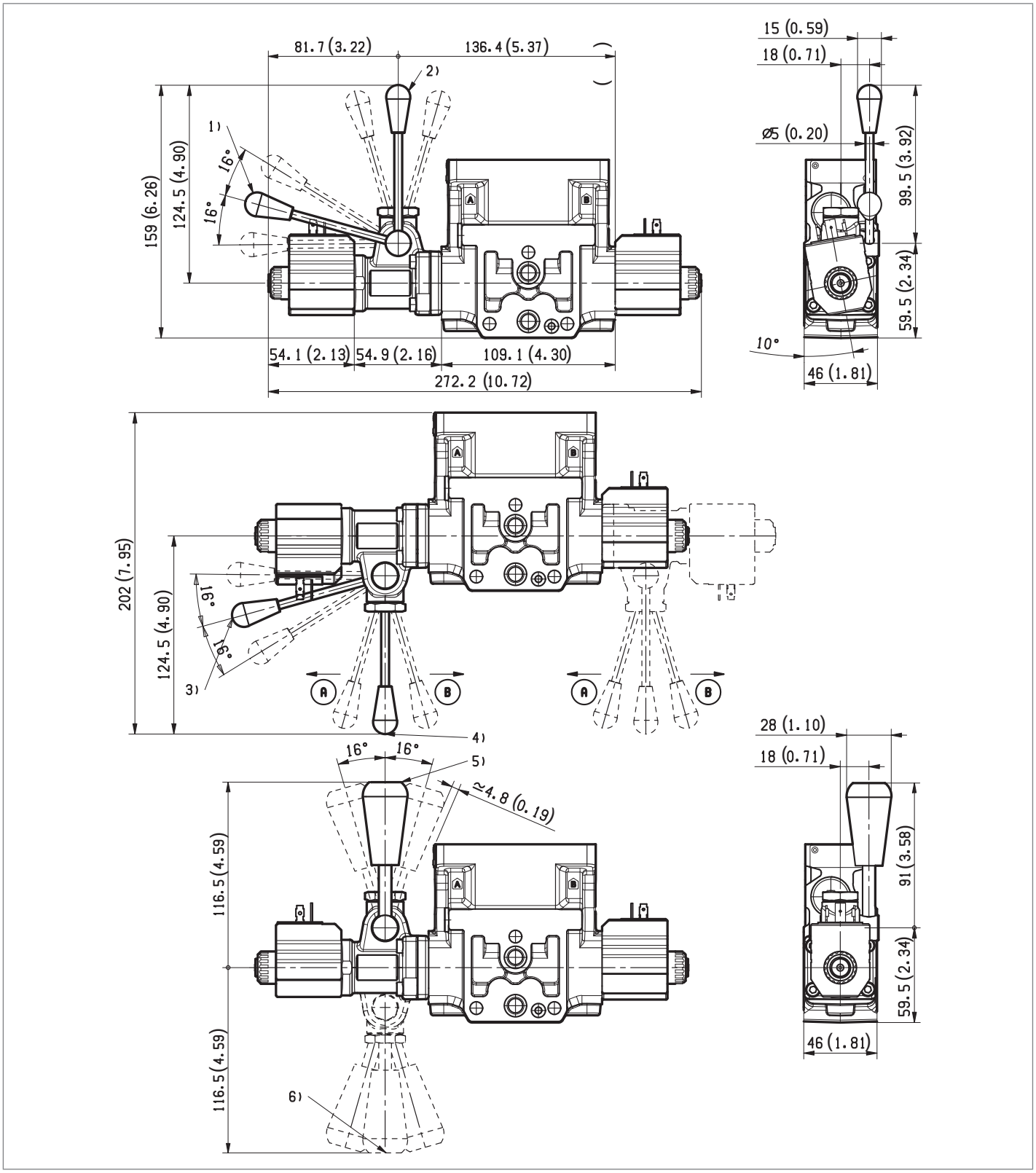

1 Ordering Details: HA (if fitted to side A) or HB (if fitted to side B)
2 Ordering Details: VA (if fitted to side A) or VB (if fitted to side B)
3 Ordering Details: H1 (if fitted to side A) or H9 (if fitted to side B)
4 Ordering Details: V1 (if fitted to side A) or V9 (if fitted to side B)
5 Ordering Details: XA (if fitted to side A) or XB (if fitted to side B)
6 Ordering Details: X1 (if fitted to side A) or X9 (if fitted to side B)

Dimensions [mm (inches)]

Electric connection

00

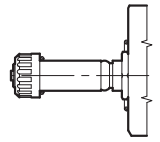

01

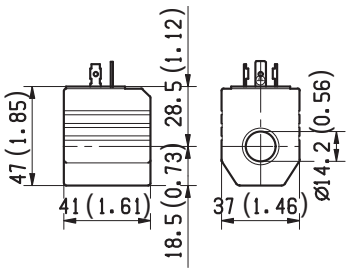

03 Protection class: IP 65 with female connector properly fitted (see drawing).

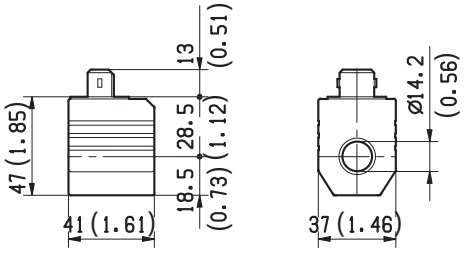

04 Protection class: IP 65 with female connector properly fitted (see drawing).

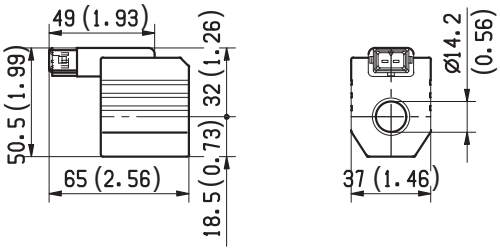

31

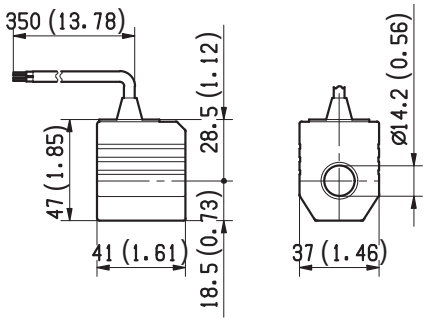

07 Protection class: IP 69 K with female connector properly fitted (see drawing).

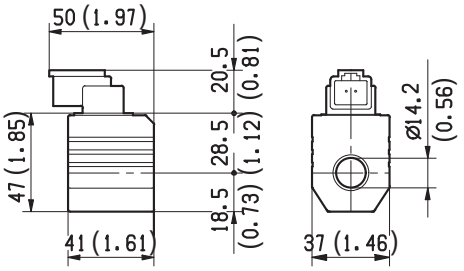

4/3 and 4/2 on-off directional valve elements with flow sharing control (LUDV concept)

L8511... (EDC-DZ)

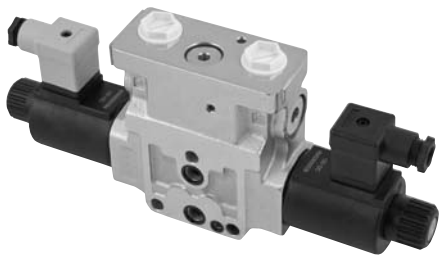

Size 6
Series 00
Maximum operating pressure 310 bar (4500 psi)
Maximum flow at 14 bar (206psi) 48 l/min (12.7 gpm)
Maximum flow at 18 bar (261psi) 54 l/min (15.3 gpm)
Ports connections G 1/2 - SAE8 and Modular

General specifications

Valve element with direct on-off flow sharing control.
It can achieve multiple simultaneous manoeuvres by distributing the available flow to each actuator selected by the operator, independently from the working pressure required.
All simultaneous movements go on at the same reduced speed in case of flow shortage.
Each energized actuator receives a pressure compensated flow.
No shuttle valve fitted.
Control spools directly operated by screwed-in solenoids with extractable coils.
Wet pin tubes for DC coils, with push rod for mechanical override; nickel plated surface.
Manual override (push-button, screw type or lever) available upon request.
Different plug-in connectors available: see ordering details.

Contents

Ordering details	2
Functional description	4
Technical data	5
Characteristic curves	7
External dimensions and fittings	8
Electric connection	10

RF 1080 - 11/02 2016, Bosch Rexroth AG

Ordering details

01	02	03	04	05	06	07	08	09	10
L	**8**	**5**	**11**					**0**	**_ _**

Family

01	Directional Valve elements ED	**L**

Type

02	Size 6 proportional	**8**

Configuration

03	Flow Sharing	**5**

Coil type

04	C45	**11**

Spool variants [1)]

05	4/3 operated both sides a and b; P, A, B, T closed in neutral	**B2**
	4/2 operated on side a only; P, A, B, T closed in neutral	**B3**
	4/2 operated on side b only; P, A, B, T closed in neutral	**B4**
	4/3 operated on both sides a and b; P closed; A and B to T in neutral	**E2**
	4/3 operated on side a only; P closed; A and B to T in neutral	**E3**
	4/3 operated on side b only; P closed; A and B to T in neutral	**E4**

Flow pattern & Nominal flow [1) - 2)]

06	Both meter in and out, A 35l/min(9.25gpm) - B 35l/min(9.25gpm)	**S8**
	Both meter in and out, A 48l/min(12.7gpm) - B 48l/min(12.7gpm)	**S9**
	Only meter in, A 35l/min(9.25gpm) - B 35l/min(9.25gpm) [5)]	**I 8**
	Only meter in, A 48l/min(12.7gpm) - B 48l/min(12.7gpm) [5)]	**I 9**
	Both meter in and out, A 15l/min(3.9gpm) - B 35l/min(9.25gpm) [5)]	**38**
	Both meter in and out, A 24l/min(6.3gpm) - B 35l/min(9.25gpm) [5)]	**48**
	Both meter in and out, A 24l/min(6.3gpm) - B 48l/min(12.7gpm) [5)]	**49**
	Both meter in and out, A 35l/min(9.25gpm) - B 48l/min(12.7gpm) [5)]	**89**

Voltage supply		**07**	**03**	**01**	**00**	
07	Without coil	–	–	–	●	**00**
	12V DC	●	●	●	–	**OB**
	13V DC	●	●	●	–	**AD**
	24V DC	●	●	●	–	**OC**
	27V DC	●	●	●	–	**AC**
	48V DC	–	–	●	–	**OD**
	110V DC	–	–	●	–	**OE**
	24V DC (21.5 DC)	–	–	●	–	**OV**
	110V DC (98 DC)	–	–	●	–	**OW**
	230V DC (207 DC)	–	–	●	–	**OZ**

Electric connections

08	Without coils	**00**
	With coils, without mating connector DIN EN 175301-803	**01** [6)]
	With coils, with bi-directional diode, without mating connector vertical Amp-Junior	**03**
	With coils, with bi-directional diode, without mating connector DT04-2P	**07**

Ports

09	G 1/2 DIN 3852	**2**
	3/4-16 UNF 2-B (SAE8)	**3**
	Machined for interfacing to modular elements	**M** [4)]

Options

10	Without manual override	**00**
	Push-button type manual override	**0P**
	Screw type manual override	**0F**
	Lever type manual override [3)]	**_ _**

● = Available – = Not available

1) The required hydraulic layout and spool variant can be chosen by consulting page 3.
2) With ΔP (P>A or P>B) 14 bar (203 psi).
3) Each different option for the type of emergency chosen implies a specific ordering code (refer to page 9).
4) See RE18301-45, RE18301-46, RE18301-47, for flangeable elements.
5) Available only for E_spool variant.
6) For connectors ordering code see data sheet RE 18325-90.

Symbols

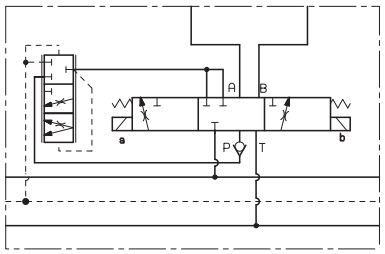

= 2
= 3

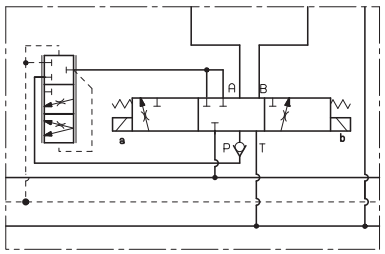

= M

Spool variant and Flow pattern

Both meter in and out

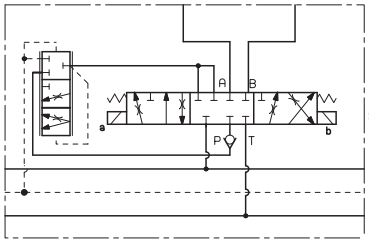

=B2

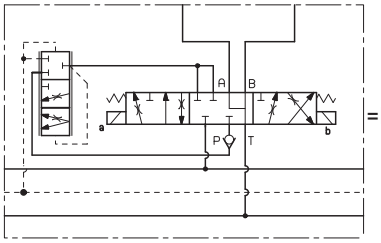

=E2

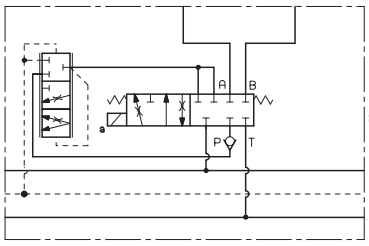

=B3

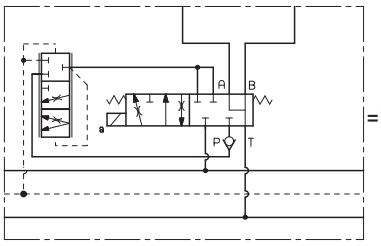

=E3

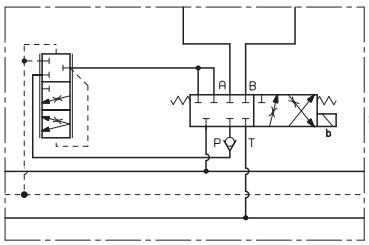

=B4

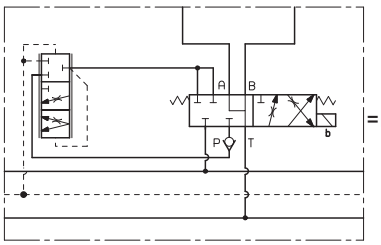

=E4

Only meter in

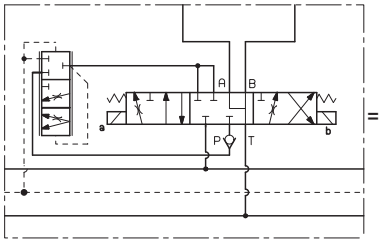

=E2I

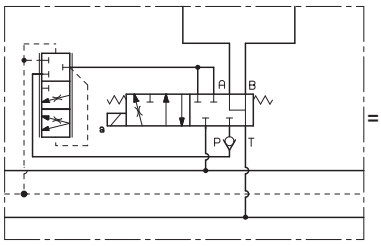

=E3I

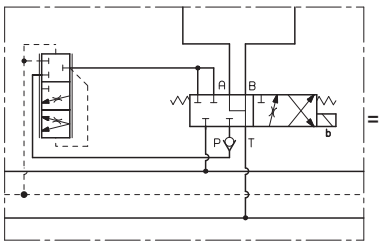

=E4I

2

RF 1080 | 11/02 2016 | Bosch Rexroth AG

643

Functional description

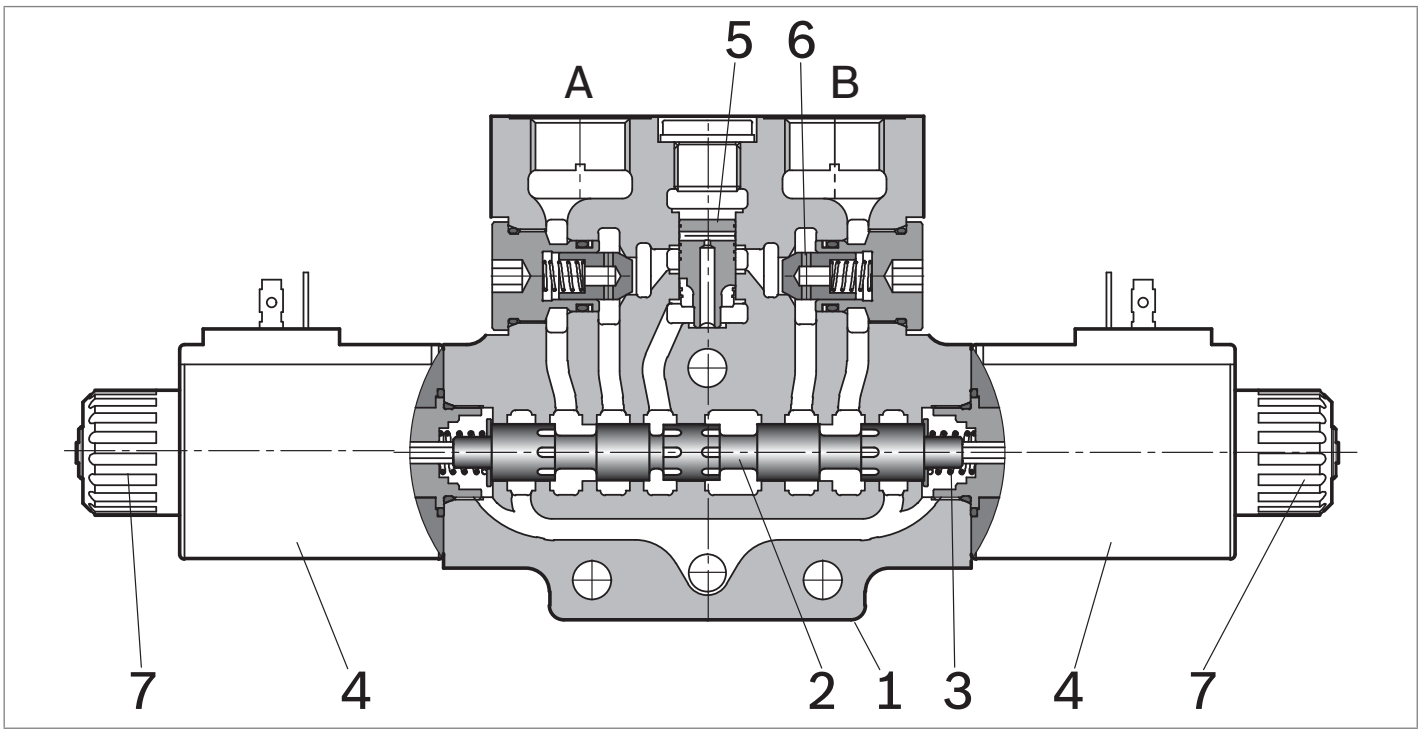

The sandwich plate design directional valve elements L8511... are compact direct operated pressure compensated solenoid valves which control the start, the stop, the direction and the quantity of the oil flow, with a FLOW SHARING principle. These elements basically consist of a stackable housing (**1**) with a control spool, two solenoids (**4**), two return springs. When energized, each solenoid (**4**) displaces the control spool from its neutral-central position “0” and the metering notches are open; flow is delivered to the 3 way pressure compensator followed by a check valve for each port A and B. The compensator, balanced by the LS pressure at the opposite end, lifts up and unloads a pressure compensated flow which is sent to the A (or B) port through the relevant check valve; at the same time the opposite port allows oil return to tank.

LS pressure reaches the compensator “dead end” directly from the A or B port, while the check valves lock eventual pressure oscillations which could affect the compensator function.

When the solenoid is de-energized, the return spring pushes the spool thrust washer back against the housing and the spool returns in its neutral-central position.

Each coil (**4**) is fastened to the solenoid tube by a ring nut (**7**). A pin allows to push the spool under emergency conditions, when the solenoid cannot be energized, like in case of voltage shortage.

Technical data

General										
Valve element with 2 solenoids	kg (lbs)	3.82 (8.42)								
Valve element with 1 solenoid	kg (lbs)	3.00 (6.61)								
Valve element with 2 solenoids and lever type emergency	kg (lbs)	4.1 (9.00)								
Valve element with 1 solenoid and lever type emergency	kg (lbs)	3.25 (7.16)								
Ambient Temperature	°C (°F)	–20....+50 (-4....+122) (NBR seals)								
Hydraulic										
Maximum pressure at P, A and B ports	bar (psi)	310 (4500)								
Maximum pressure at T	bar (psi)	210 (3050)								
Maximum pressure with lever emergency at T	bar (psi)	140 (2030)								
Maximum flow	l/min (gpm)	48 (12.7)								
Hydraulic fluid General properties: it must have physical lubricating and chemical properties suitable for use in hydraulic systems such as, for example:		Mineral oil based hydraulic fluids HL (DIN 51524 part 1). Mineral oil based hydraulic fluids HLP (DIN 51524 part 2). For use of environmentally acceptable fluids (vegetable or polyglycol base) please consult us.								
Fluid Temperature	°C (°F)	–20....+80 (-4....+176) (NBR seals)								
Permissible degree of fluid contamination		ISO 4572: $\beta_x \geq 75$ X=12...15 ISO 4406: class 20/18/15 NAS 1638: class 9								
Viscosity range	mm^2/s	5....420								
Electrical										
Voltage type	PWM	DC (AC only with RAC connection)								
Voltage tolerance (nominal voltage)	%	-10 .... +10								
Duty		Continuous, with ambient temperature ≤ 50°C (122°F)								
Coil wire temperature not to be exceeded	°C (°F)	150 (302)								
Insulation class		H								
Compliance with		Low Voltage Directive LVD 73/23/EC (2006/95/EC), 2004/108/EC								
Coil weight with connection EN 175301-803	kg (lbs)	0.335 (0.74)								
Voltage	V	12	13	24	27	48	110	24 +RAC (21,5)	110 +RAC (98)	230 +RAC (207)
Voltage type		DC	DC	DC	DC	DC	DC	AC	AC	AC
Power consumption	W	33	31	33	33	33	35	33	33	35
Nominal 100% current	A	2.8	2.30	1.40	1.20	0.7	0.32	1.60	0.34	0.16
Coil resistance (nominal at 20°C (68°F))	Ω	4.24	5.42	17	21.8	69.8	341.8	13.6	285	1229

Note
For applications with different specifications consult us

RF 1830 | 11/02 2016 Bosch Rexroth AG

645

Code	Voltage [V]	Connector type	Coil description	Marking	Coil Mat no.
OB 01	12 DC	EN 175301-803 (Ex. DIN 43650)	C4501 12DC	12 DC	R933000026
OB 03	12 DC	AMP JUNIOR	C4503 12DC	12 DC	R933000027
OB 07	12 DC	DEUTSCH DT 04-2P	C4507 12DC	12 DC	R933000030
AD 01	13 DC	EN 175301-803 (Ex. DIN 43650)	C4501 13DC	13 DC	R933000028
AD 03	13 DC	AMP JUNIOR	C4503 13DC	13 DC	R933000029
AD 07	13 DC	DEUTSCH DT 04-2P	C4507 13DC	13 DC	R933000031
OC 01	24 DC	EN 175301-803 (Ex. DIN 43650)	C4501 24DC	24 DC	R933000034
OC 03	24 DC	AMP JUNIOR	C4503 24DC	24 DC	R933003630
OC 07	24 DC	DEUTSCH DT 04-2P	C4507 24DC	24 DC	R933000032
AC 01	27 DC	EN 175301-803 (Ex. DIN 43650)	C4501 27DC	27 DC	R933000035
AC 03	27 DC	AMP JUNIOR	C4503 27DC	27 DC	R933000036
AC 07	27 DC	DEUTSCH DT 04-2P	C4507 27DC	27 DC	R933000033
OD 01	48 DC	EN 175301-803 (Ex. DIN 43650)	C4501 48DC	48 DC	R933000037
OE 01	110 DC	EN 175301-803 (Ex. DIN 43650)	C4501 110DC	110 DC	R933000040
OV 01	24 RAC	EN 175301-803 (Ex. DIN 43650)	C4501 21.5DC	21.5 DC	R933000038
OW 01	110 RAC	EN 175301-803 (Ex. DIN 43650)	C4501 98DC	98 DC	R933000039
OZ 01	230 RAC	EN 175301-803 (Ex. DIN 43650)	C4501 207DC	207 DC	R933000041

Characteristic curves

Nominal flow Qnom=Qnom (ΔP ls)

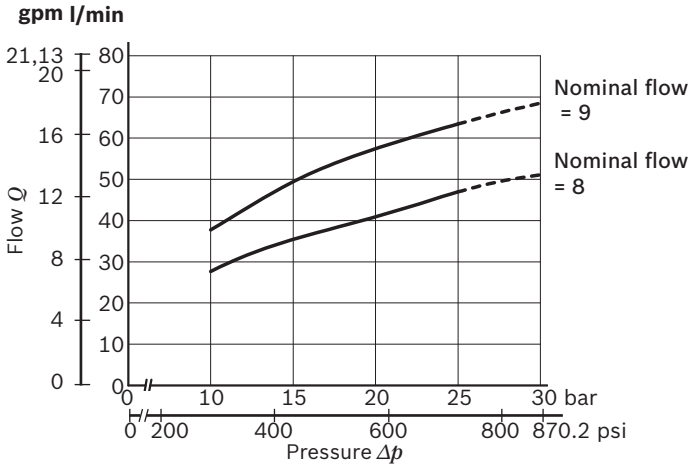

Pressure differential across the spool (ΔPls)

Performances limits

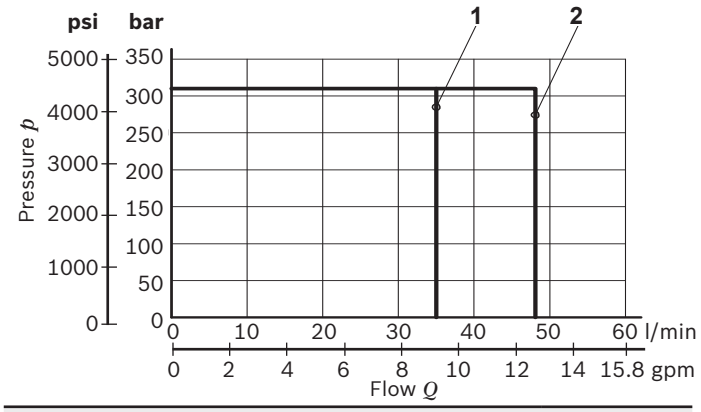

Spool Variant	Curve no.
B2S8, E2S8, B3S8, E3S8, B4S8, E4S8, B2I8, E2I8, B3I8, E3I8, B4I8, E4I8	1
B2S9, E2S9, B3S9, E3S9, B4S9, E4S9, B2I9, E2I9, B3I9, E3I9, B4I9, E4I9	2

The performance curves are measured with flow going across and coming back, like P>A and B>T. With “lever type” emergency control, the performance limits are slightly lower.

LS drain
gpm l/min

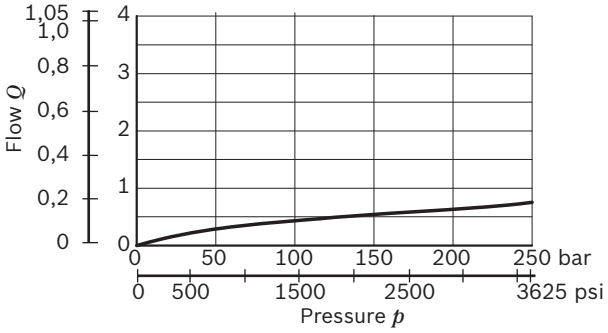

Version: pressure drop Δp = Δp(Q) (P_{IN}- P_{OUT}) to the next section

psi bar

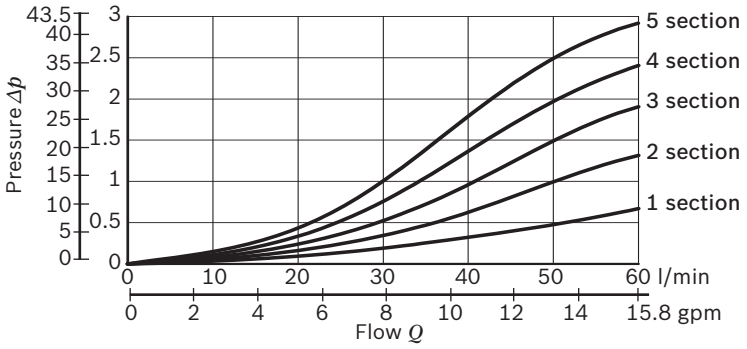

External dimensions and fittings

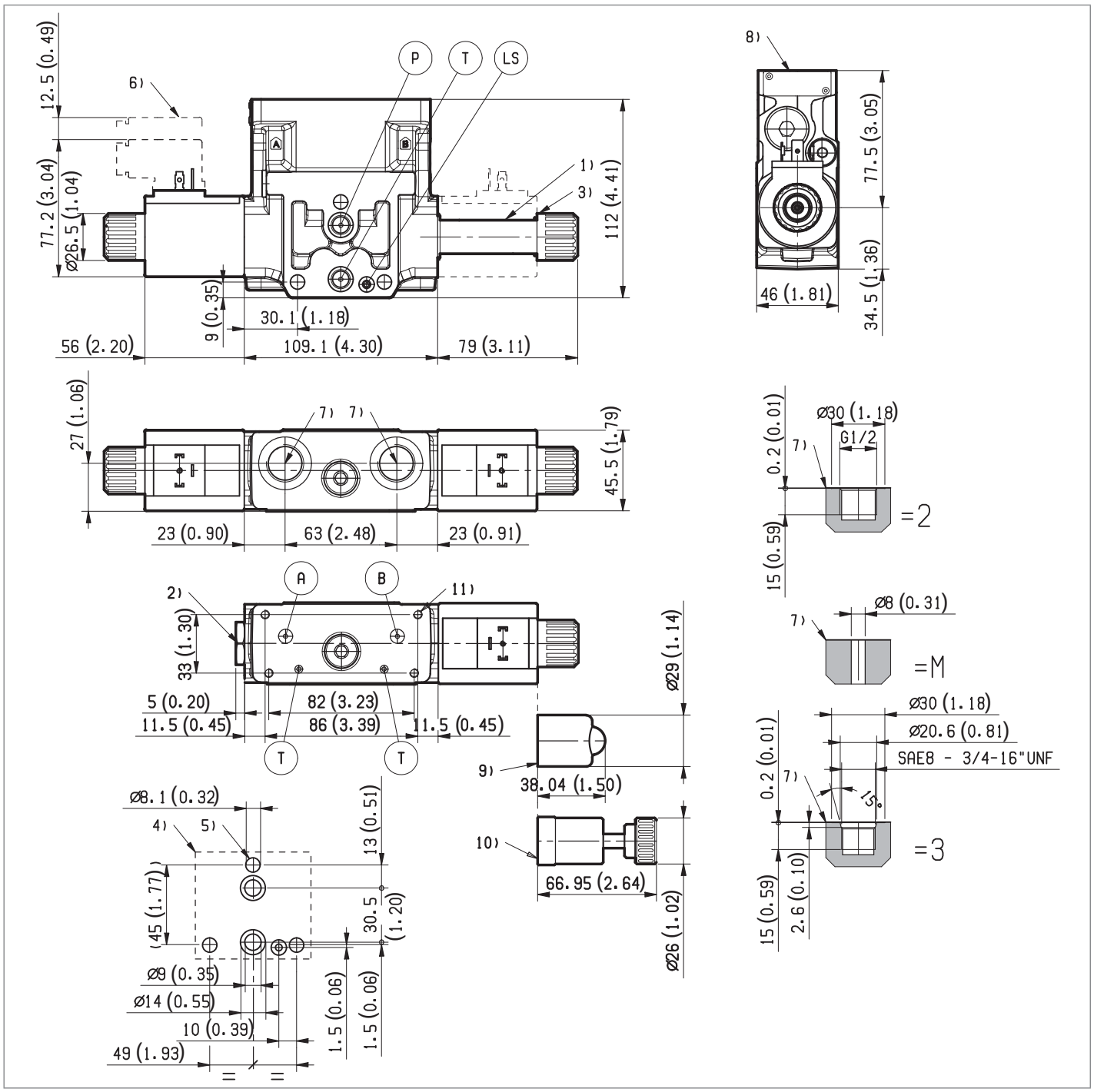

1 Solenoid tube Ø19mm (0.75 inch).
2 Plug for 2position version (4/2).
3 Ring nut for coil locking (Ø26.5mm).
Torque 6-7 Nm (4.4-5.2 ft-lb).
4 Flange specifications for coupling to ED intermediate elements.
5 For tie road and tightening torque information see data sheet RE 18301-90.
6 Clearance needed for connector removal.
7 A and B ports.
8 Identification label.
9 Optional push-button manual override, 0P type, for spool opening: it is pressure stuck to the ring nut for coil locking.
Mat no. R933000043.
10 Optional screw type manual override, 0F type, for spool opening: it is screwed (torque 6-7 Nm (4.4-5.2ft-lb) to the tube as replacement of the coil ring nut. Mat no. R933007215.
11 Four threaded holes M5 deepth 12mm (0.47 inch) for fitting a secondary flangeable element. Bolts M5 with recommended strength class DIN8.8: torque 5-6 Nm (3.6-4.4 ft-lb) (only for version with modular secondary valves).

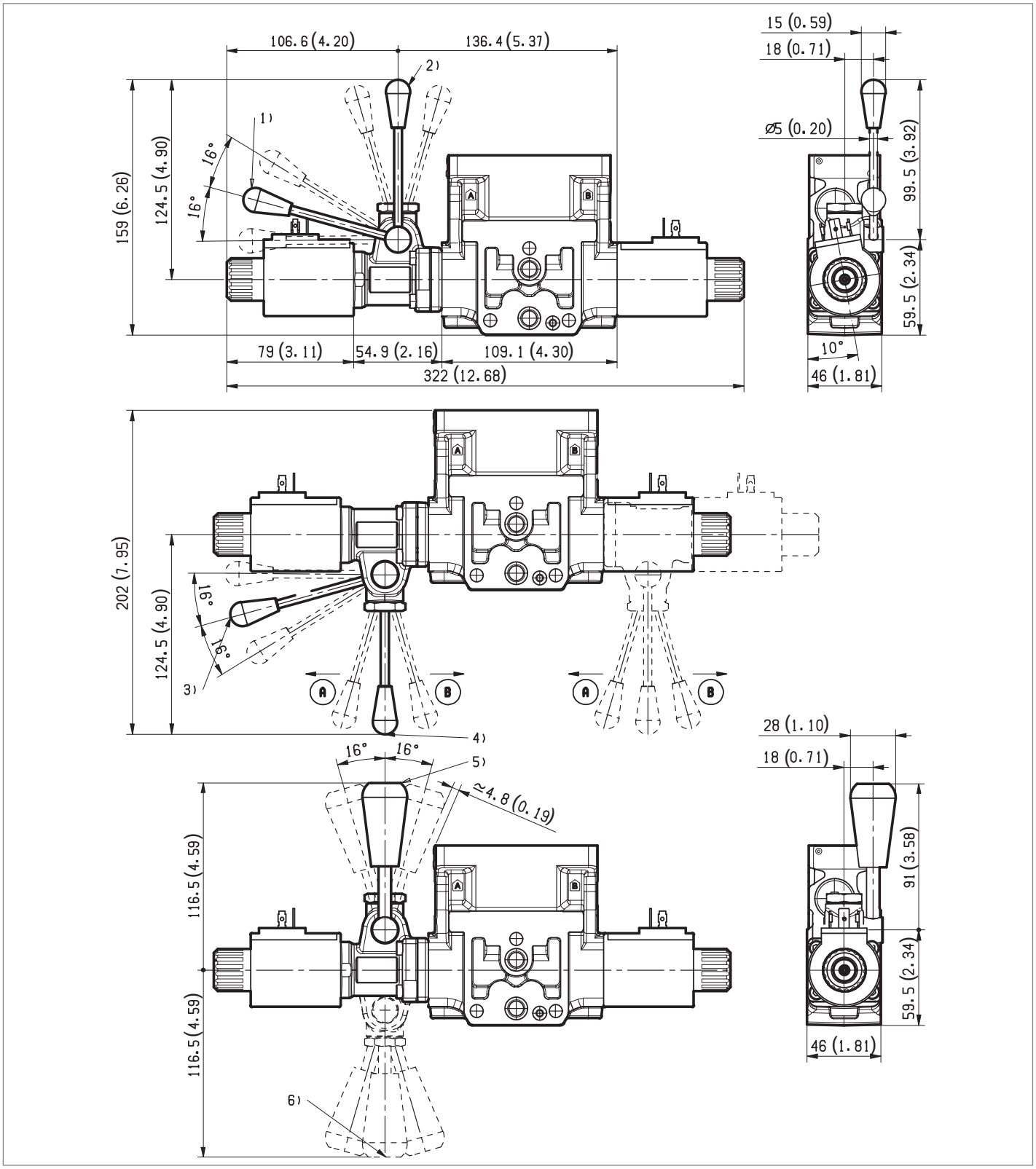

1 Ordering Details: HA (if fitted to side A) or HB (if fitted to side B)
2 Ordering Details: VA (if fitted to side A) or VB (if fitted to side B)
3 Ordering Details: H1 (if fitted to side A) or H9 (if fitted to side B)
4 Ordering Details: V1 (if fitted to side A) or V9 (if fitted to side B)
5 Ordering Details: XA (if fitted to side A) or XB (if fitted to side B)
6 Ordering Details: X1 (if fitted to side A) or X9 (if fitted to side B)

Dimensions [mm (inches)]

Electric connection

00

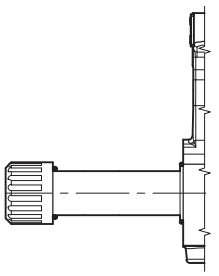

01

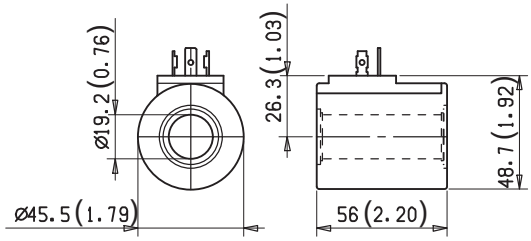

03 Protection class: IP 65 with female connector properly fitted (see drawing).

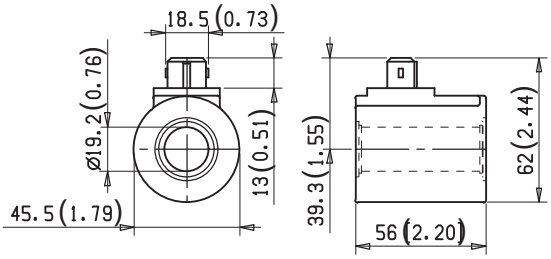

07 Protection class: IP 69 K with female connector properly fitted (see drawing).

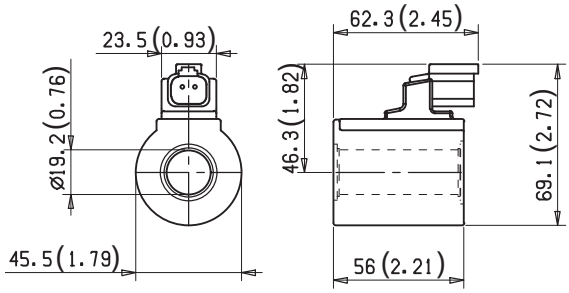

4/3 Proportional directional valve elements with proportional hydraulic control and flow sharing control (LUDV concept)

PATENT PENDING

L85P5... (EDC-IP)

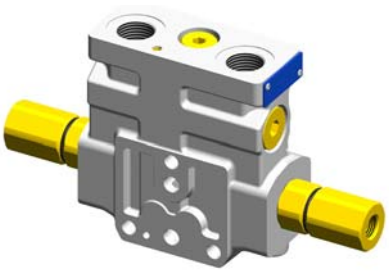

Size 6
Series 00
Maximum operating pressure 310 bar (4500 psi)
Maximum flow at 14 bar (203 psi) 50 l/min (13.2 gpm)
Maximum flow at 18 bar (261 psi) 58 l/min (15.3 gpm)
Ports connections planned G 3/8 - G 1/2 - SAE8 and Modular

General specifications

Valve element with direct proportional flow sharing control.
It can achieve the simultaneous activation of different actuators by distributing the available flow proportionally to the speeds selected by the operator.
All simultaneous movements go on at the same reciprocal speed also in case of flow shortage.
Hydraulically direct operated spool.
Hydraulic operating element bolted on.
Hydraulic operating element available with inlet port: G1/4 DIN3852; 9/16-18 UNF 2-B.
The control spool is held in the central position by return springs.

Contents

Ordering details	2
Functional description	4
Technical data	5
Characteristic curves	6
External dimensions and fittings	8

RF 1580 - 14/04 2016, Bosch Rexroth AG

Ordering details

01	02	03	04	05	06	07				
L	**8**	**5**	**P5**			**00**	**00**		**0**	**00**

Family

01	Directional Valve elements ED	**L**

Type

02	Size 6 proportional	**8**

Configuration

03	Flow Sharing	**5**

Operation type

04	Direct hydraulic proportional	**P5**

Spool variants

05	4/3 operated on both sides a and b; P, A, B, T closed in neutral	**B2**
	4/3 operated on both sides a and b; P closed; A and B to T in neutral	**E2**

Flow pattern & Nominal flow [1) · 3)]

06	Both meter in and out, A 4l/min(1,06gpm) - B 4l/min(1,06gpm)	**S0**
	Both meter in and out, A 8l/min(1,85gpm) - B 8l/min(1,85gpm)	**S1**
	Both meter in and out, A 12l/min(3,17gpm) - B 12l/min(3,17gpm)	**S2**
	Both meter in and out, A 16l/min(4,23gpm) - B 16l/min(4,23gpm)	**S3**
	Both meter in and out, A 25l/min(6,6gpm) - B 25l/min(6,6gpm)	**S4**
	Both meter in and out, A 40l/min(10,57gpm) - B 40l/min(10,57gpm)	**S8**
	Both meter in and out, A 50l/min(13,2gpm) - B 50l/min(13,2gpm)	**S9**
	Only meter in, A 8l/min(1,85gpm) - B 8l/min(1,85gpm)	**I1**
	Only meter in, A 12l/min(3,17gpm) - B 12l/min(3,17gpm)	**I2**
	Only meter in, A 25l/min(6,6gpm) - B 25l/min(6,6gpm)	**I4**
	Only meter in, A 40l/min(10,57gpm) - B 40l/min(10,57gpm)	**I8**
	Only meter in, A 50l/min(13,2gpm) - B 50l/min(13,2gpm)	**I9**
	Both meter in and out, A 4l/min(1,06gpm) - B 8l/min(1,85gpm)	**01**
	Both meter in and out, A 8l/min(1,85gpm) - B 12l/min(3,17gpm)	**12**
	Both meter in and out, A 8l/min(1,85gpm) - B 16l/min(4,23gpm)	**13**
	Both meter in and out, A 12l/min(3,17gpm) - B 16l/min(4,23gpm)	**23**
	Both meter in and out, A 12l/min(3,17gpm) - B 25l/min(6,6gpm)	**24**
	Both meter in and out, A 16l/min(4,23gpm) - B 25l/min(6,6gpm)	**34**
	Both meter in and out, A 16l/min(4,23gpm) - B 40l/min(10,57gpm)	**38**
	Both meter in and out, A 25l/min(6,6gpm) - B 40l/min(10,57gpm)	**48**
	Both meter in and out, A 25l/min(6,6gpm) - B 50l/min(13,2gpm)	**49**
	Both meter in and out, A 40l/min(10,57gpm) - B 50l/min(13,2gpm)	**89**

Ports

07	G 3/8 DIN 3852	**0**
	G 1/2 DIN 3852	**2**
	3/4-16 UNF 2-B (SAE8)	**3**
	Machined to interface modular elements	**M [2)]**

1) The required hydraulic layout and spool variant can be chosen by consulting page 3.
2) See RE18301-45, RE18301-46, RE18301-47, for flangeable elements.
3) With Δp (P > A or P > B) 14 bar (203 psi).

Symbols

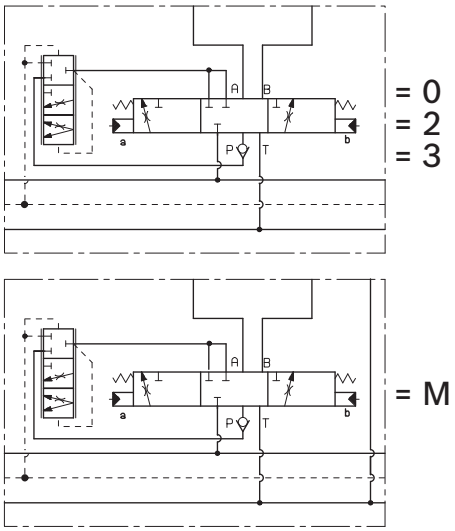

Spool variant and Flow pattern

Both meter in and out

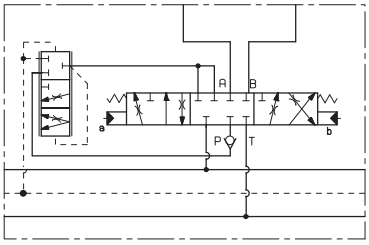

=B2

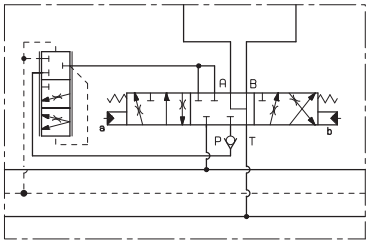

=E2

Only meter in

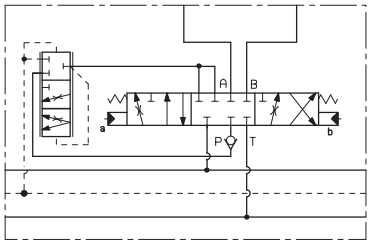

=B2I

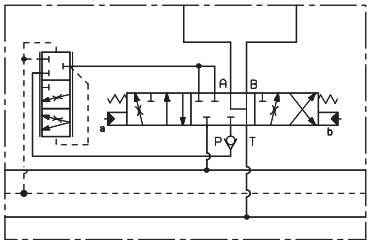

=E2I

Functional description

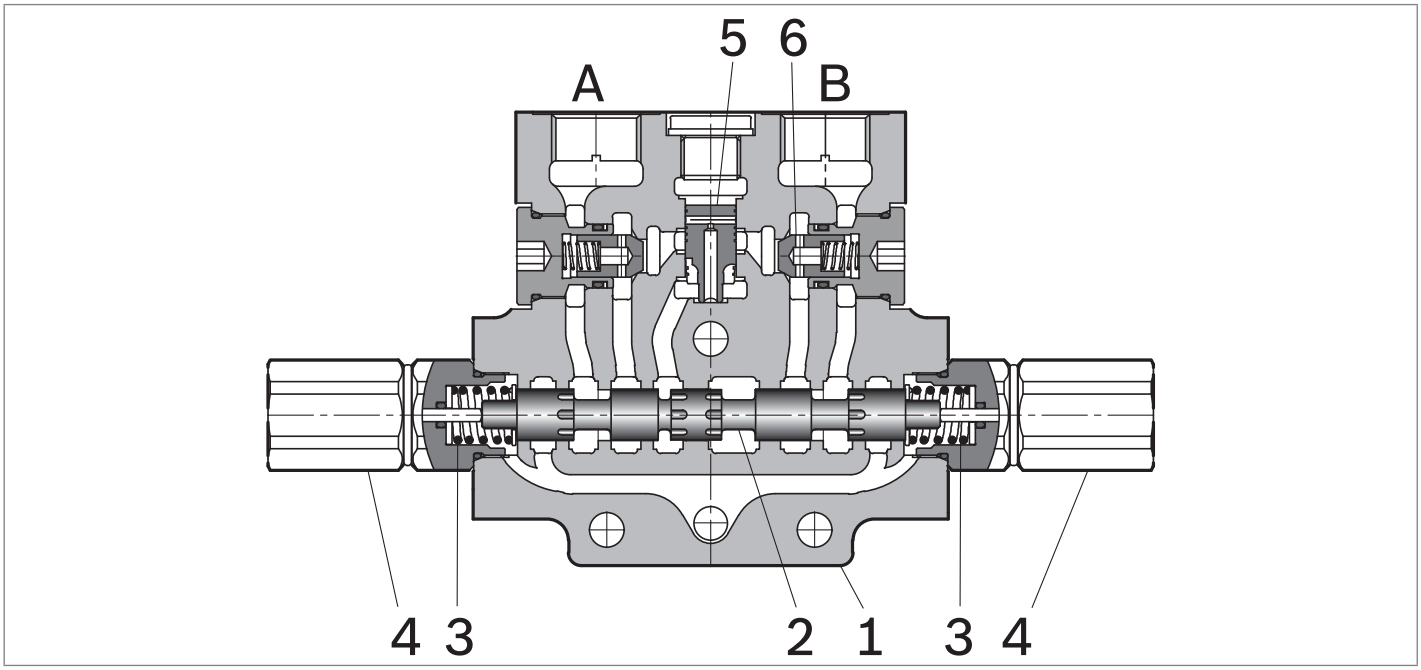

The sandwich plate design directional valve elements L85P5... are compact direct hydraulic operated pressure compensated proportional valves which control the start, the stop, the direction and the quantity of the oil flow, with FLOW SHARING principle. These elements basically consist of a stackable housing (**1**) with a control spool (**2**), two hydraulic operating blocks (**4**), and two return spring return (**3**).
The hydraulic pressure in one of the blocks (**4**) pushes the control spool (**2**) from its neutral-central position "0" to the required end position "a" or "b". When the spool is shifted and the metering notch is open, flow delivery starts and is controlled by a 3 way pressure compensator followed by a check valve for each port A and B.

The compensator, balanced by the LS pressure at the opposite end, lifts up and unloads a regulated flow which is sent to the A (or B) port through the relevant check valve; at the same time the opposite port allows oil return to tank. LS pressure reaches the compensator “dead end” directly from the A or B port, while the check valves lock eventual pressure oscillations which could affect the compensator function.
When the pressure decrease in one of the block (**4**), the return spring (**3**) pushes the spool thrust washer back against the housing and the spool returns in its neutral-central position.

Technical data

General		
Valve element with 2 hydraulic controls	kg (lbs)	3.05 (6.72)
Ambient Temperature	°C (°F)	–20....+50 (-4....+122) (NBR seals)
Hydraulic		
Maximum pressure at P, A and B ports	bar (psi)	310 (4500)
Maximum pressure at T to prevent damages	bar (psi)	100 (1450)
Reccomended maximum pressure at T during operation	bar (psi)	10 (145)
Max. pilot pressure	bar (psi)	35 (508)
Min. pilot pressure		refer to page 6
Max. regulated flow at 14 bar (203 psi)	l/min (gpm)	50 (13.2)
Max. regulated flow at 18 bar (261 psi)	l/min (gpm)	58 (15.3)
E-schemes flow pattern symmetrical closed pass in the neutral position (connection from A to T and B to T)		Approx. 2% of the nominal cross-section
Hydraulic fluid General properties: it must have physical lubricating and chemical properties suitable for use in hydraulic systems such as, for example:		Mineral oil based hydraulic fluids HL (DIN 51524 part 1). Mineral oil based hydraulic fluids HLP (DIN 51524 part 2). For use of environmentally acceptable fluids (vegetable or polyglycol base) please consult us.
Fluid Temperature	°C (°F)	–20....+80 (-4....+176) (NBR seals)
Permissible degree of fluid contamination		ISO 4572: $\beta_x \geq 75$ X=10...12 ISO 4406: class 19/17/14 NAS 1638: class 8
Viscosity range	mm^2/s	20....380 (optimal 30....46)

Note
For applications with different specifications consult us

Characteristic curves

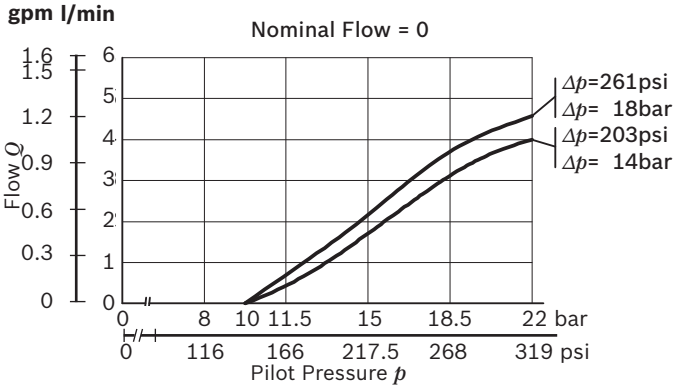

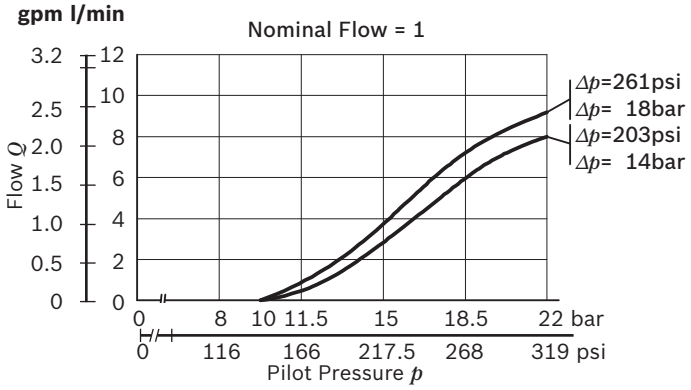

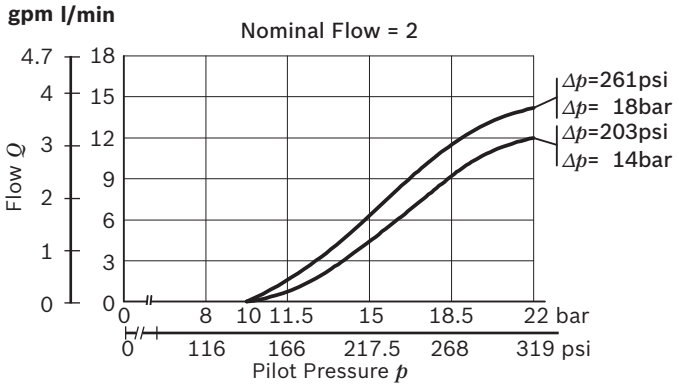

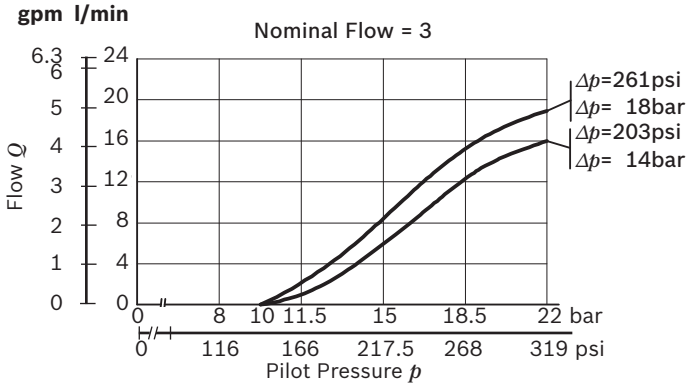

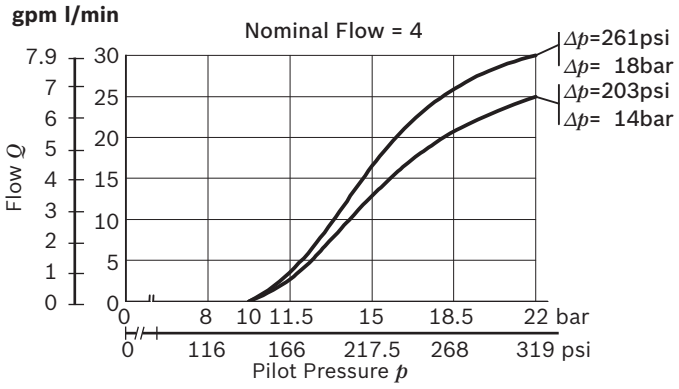

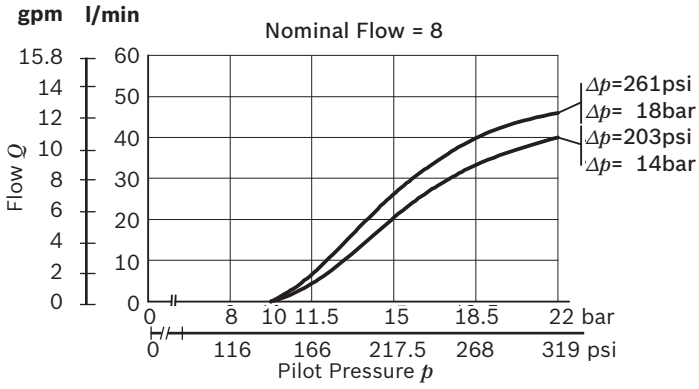

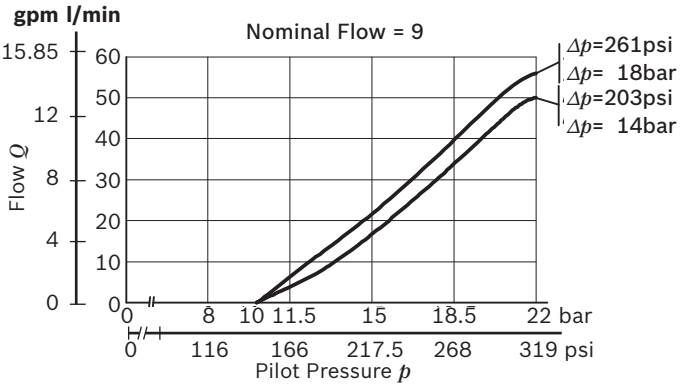

The curves refer to the spool fully open.
Measured with hydraulic fluid ISO-VG32 at 45° ±5 °C (113° ±9 °F); ambient temperature 20 °C (68 °F).

Nominal flow Qnom=Qnom (ΔP ls)

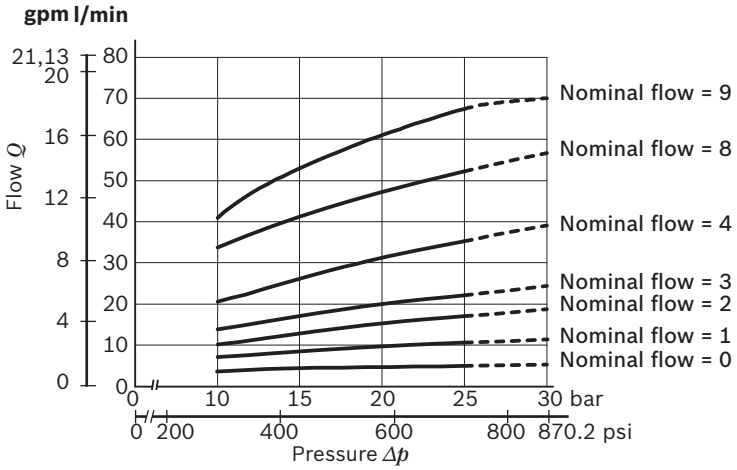

Pressure differential across the spool (ΔPls)

LS drain

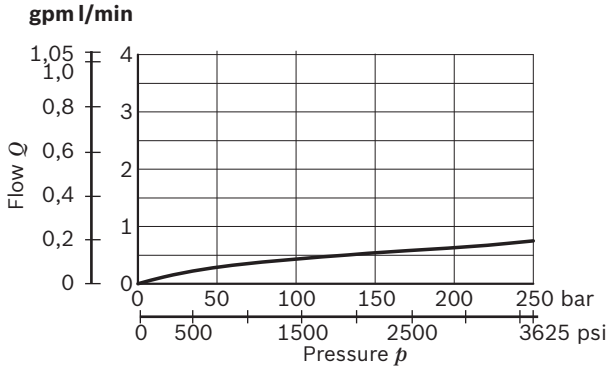

Pressure drop Δp = Δp(Q) (P_{IN}- P_{OUT}) to the next section

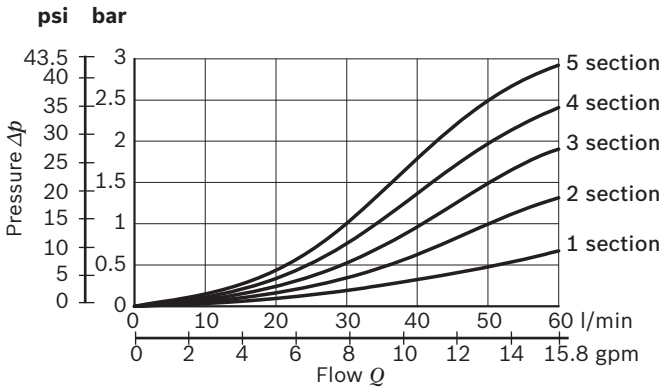

Pressure drop Δp = Δp(Q) with spool B2S9

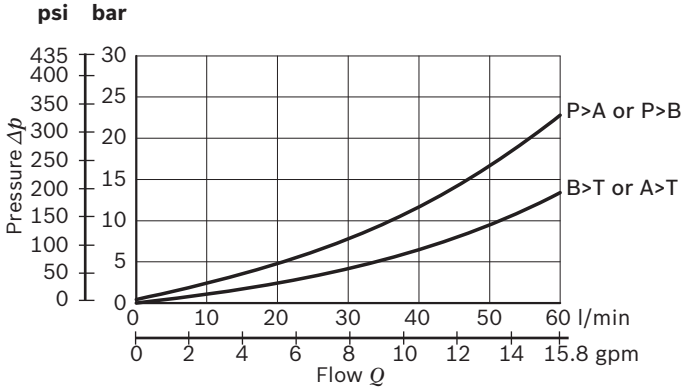

The curves refer to the spool fully open.
Measured with hydraulic fluid ISO-VG32 at 45° ±5 °C (113° ±9 °F); ambient temperature 20 °C (68 °F).

External dimensions and fittings

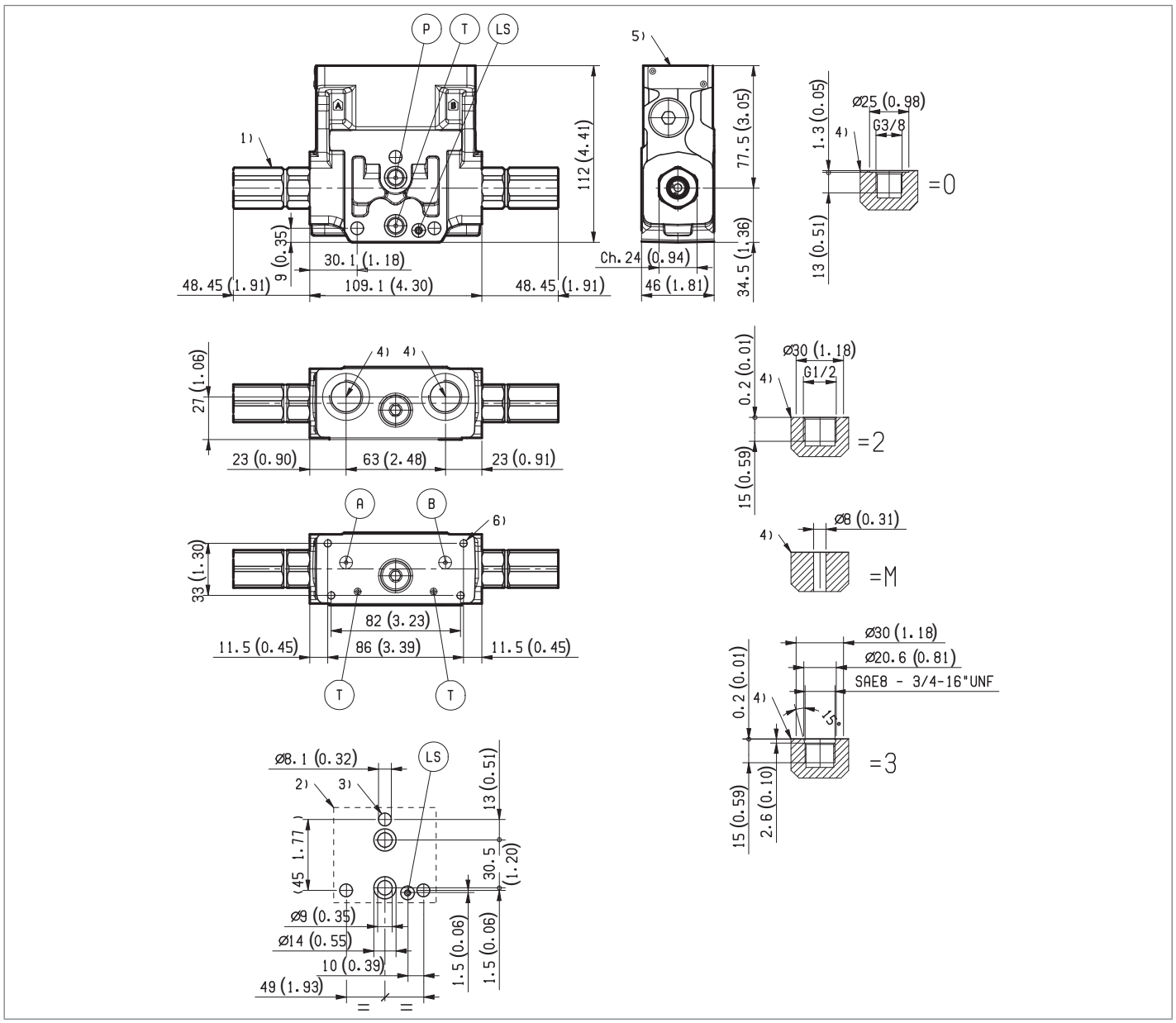

1 Hydraulic operating element available with inlet port: G1/4 DIN3852; 9/16-18 UNF 2-B (SAE6)
2 Flange specifications for coupling to ED intermediate elements.
3 For tie rod and tightening torque information see data sheet RE 18301-90
4 A and B ports.
5 Identification label.
6 Four threaded holes M5 deepth 12mm [0.47 inch] for fitting a secondary flangeable element. Bolts M5 with recommended strength class DIN8.8: torque 5-6 Nm[3.6-4.4 ft-lb] (only for version with modular secondary valves).

4/3 Directional valve elements with manual lever operated control with flow sharing control (LUDV concept)

L85L1...(EDC-LV)

Size 6
Series 00
Maximum operating pressure on "P" 350 bar (5076 psi)
Maximum peak pressure "A-B" 380 bar (5511 psi)
Maximum flow at 14 bar (203 psi) 70l/min(18.49gpm)
Maximum flow at 18 bar (261 psi) 78l/min(20.6gpm)
Ports connections planned G 3/8 - G 1/2 - SAE8 and Modular

General specifications

Valve element with direct proportional flow sharing control.
It can achieve the simultaneous activation of different actuators by distributing the available flow proportionally to the speeds selected by the operator.
All simultaneous movements go on at the same reciprocal speed also in case of flow shortage.
No shuttle valve fitted.
Control spools manual operated by hand lever.
Control spool with return for all three positions.

Contents

Ordering details	2
Functional description	3
Technical data	4
Characteristic curves	5
External dimensions and fittings	6

RE 1 30 . 17/ 02 2012 Bosch Rexroth AG

Ordering details

01	02	03	04	05	06	07	08	09	
L	**8**	**5**	**L1**						**00**

Family

01	Directional Valve elements ED	**L**

Type

02	Size 6	**8**

Configuration

03	Flow Sharing	**5**

Operation type

04	Manual lever	**L1**

Spool variants

05	4/3 operated on both sides a and b; P,A,B,T colsed in neutral	**B2**
	4/3 operated on both sides a and b; P closed; A and B and T in neutral	**E2**

Flow pattern & Nominal Flow [1)]

06	Both meter in and out, A 25 l/min (6,6gpm) - B 25 l/min (6,6gpm)	**S4**
	Both meter in and out, A 70 l/min (18,49gpm) - B 70 l/min (18,49gpm)	**SZ**

Side with the control lever

07	a side with handle aiming high (A and B direction)	**A0**
	a side with handle aiming low (opposite to A and B)	**A2**
	b side with handle aiming high (A and B direction)	**B0**
	b side with handle aiming low (opposite to A and B)	**B2**

Manual lever control

08	With return spring	**M1**

Ports

09	G 3/8 DIN 3852	**0**
	G 1/2 DIN 3852	**2**
	3/4-16 UNF 2-B (SAE8)	**3**
	Machined for interfacing to modular elements	**M** [2)]

Symbols

Configuration

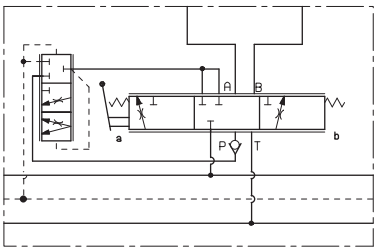

= 0
= 2
= 3

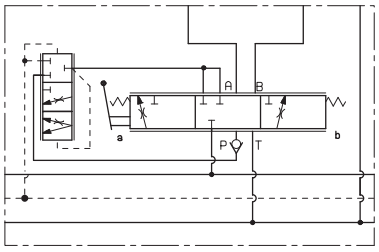

= M

Spool variants - Both meter in and out

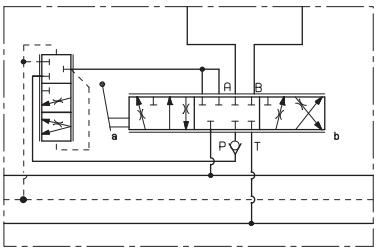

= B2

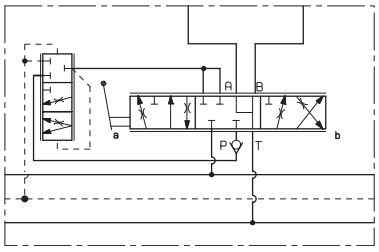

= E2

Side with the control lever

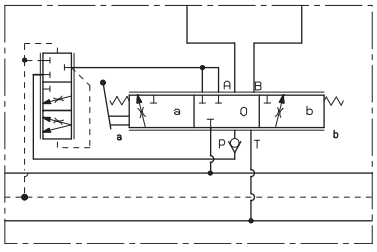

= A_M1

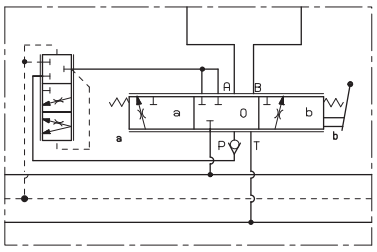

= B_M1

1) With Δp (P>A or P>B) 14 bar (203bar).
2) See RE18301-45, RE18301-46, RE18301-47, for flangeable elements.

Functional description

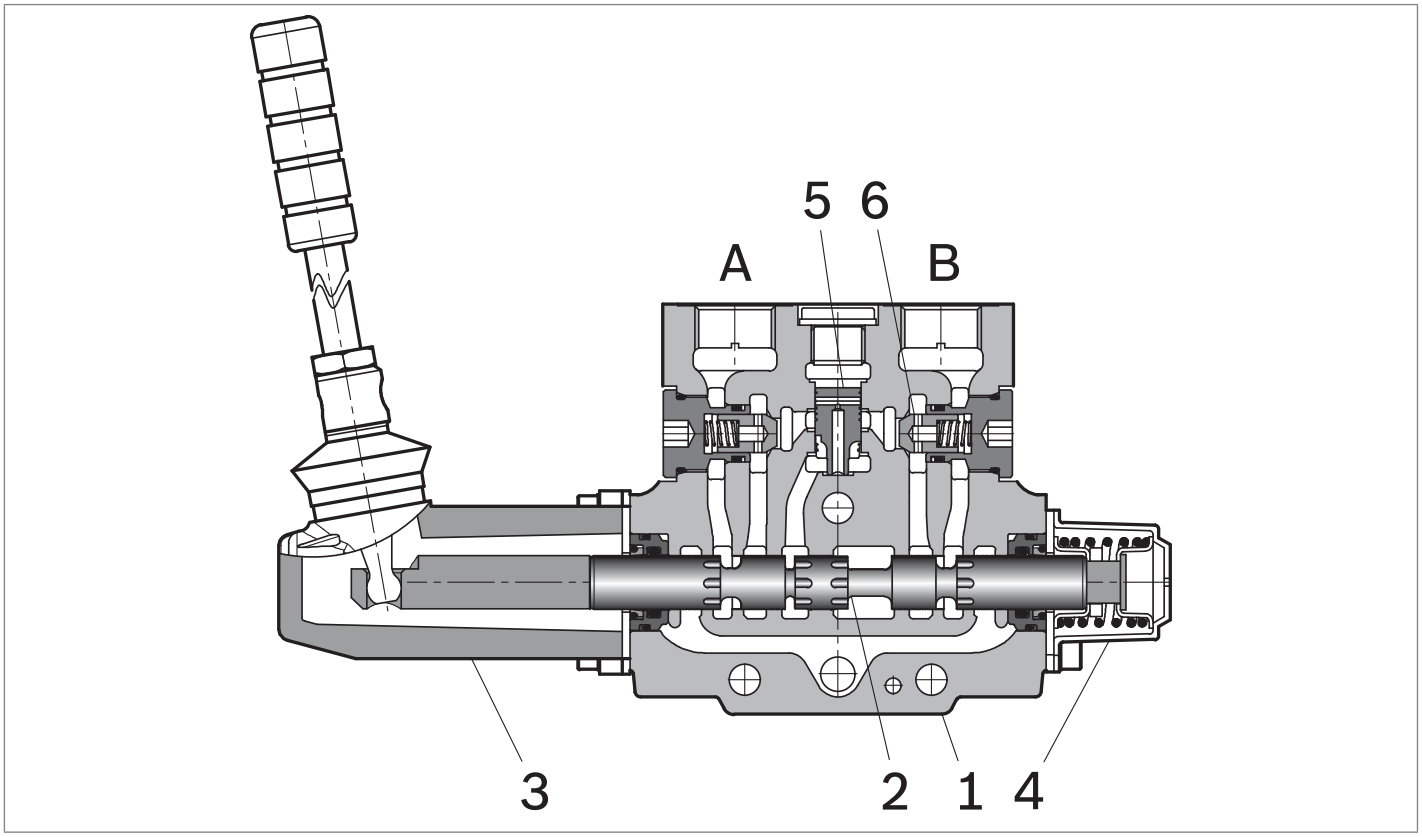

The sandwich plate design directional valve elements L85L1... are compact direct operated pressure compensated manual operated valves which control the start, the stop, the direction and the quantity of the flow, with a FLOW SHARING principle.
These elements basically consist of a stackable housing (**1**) with the control spool (**2**), a block with the control lever (**3**), and a spring housing (**4**) with a return spring.
When the hand operated lever moves the control spool (**2**) from its neutral-central position "0" and the metering notches are open; flow is delivered to the 3 way pressure compensator (**5**) followed by a check valve (**6**) for each port A or B.

The compensator, balanced by the LS pressure at the opposite and, lifts up and unloads a pressure compensated flow which is sent to the A (or B) port through the relevant check valve; at the same time the opposite port allows oil return to tank.
LS pressure reaches the compensator "dead end" directly from the A or B port, while the check valves lock eventual pressure oscillations which could affect the compensator function.
Type L85L1_2___M1_000 is the valve version in which the spring return brings the spool back to neutral-central position "0"when the manual lever is not operated.

Technical data

General		
Valve element weight	kg (lbs)	3.5 (7.72)
Mounting position	kg (lbs)	Unrestricted
Ambient Temperature	°C (°F)	-30....+80 (-22...176) (NBR seals)
Hydraulic		
Maximum pressure at P, A and B ports	bar (psi)	350 (5076)
Maximum pressure at T	bar (psi)	20 (290)
Maximum flow at 14 l/min (203psi)	l/min (gpm)	70 (18.49)
Maximum flow at 18 l/min (261psi)	l/min (gpm)	78 (20.6)
Hydraulic fluid General properties: it must have physical lubricating and chemical properties suitable for use in hydraulic systems such as, for example:		Mineral oil based hydraulic fluids HL (DIN 51524 part 1). Mineral oil based hydraulic fluids HLP (DIN 51524 part 2). For use of environmentally acceptable fluids (vegetable or polyglycol base) please consult us.
Fluid Temperature	°C (°F)	-30....+100 (-22...212) (NBR seals)
Permissible degree of fluid contamination		ISO 4572: $\beta_x \geq 75$ X=12...15 ISO 4406: class 20/15/15 NAS 1638: class 9
Viscosity range	mm^2/s	5....420

Note
For applications with different specifications consult us

Characteristic curves

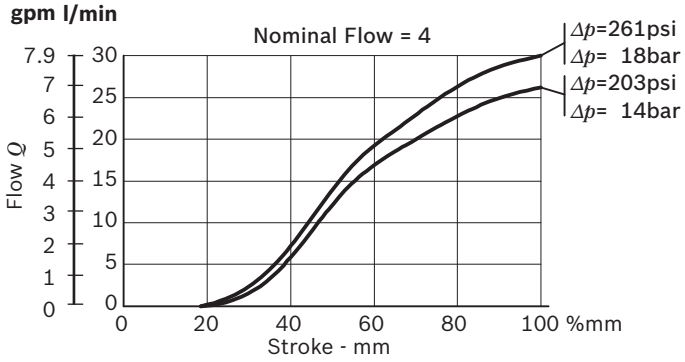

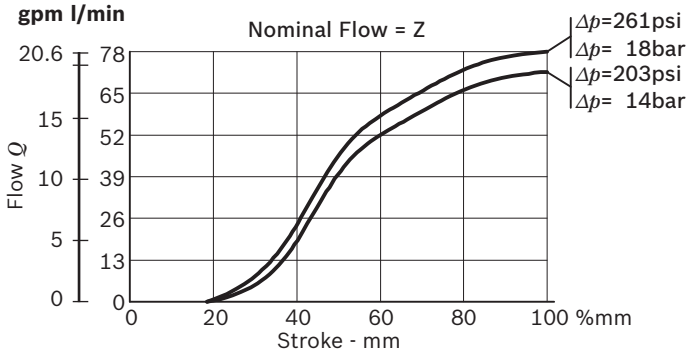

Nominal flow Qnom=Qnom (ΔP ls)

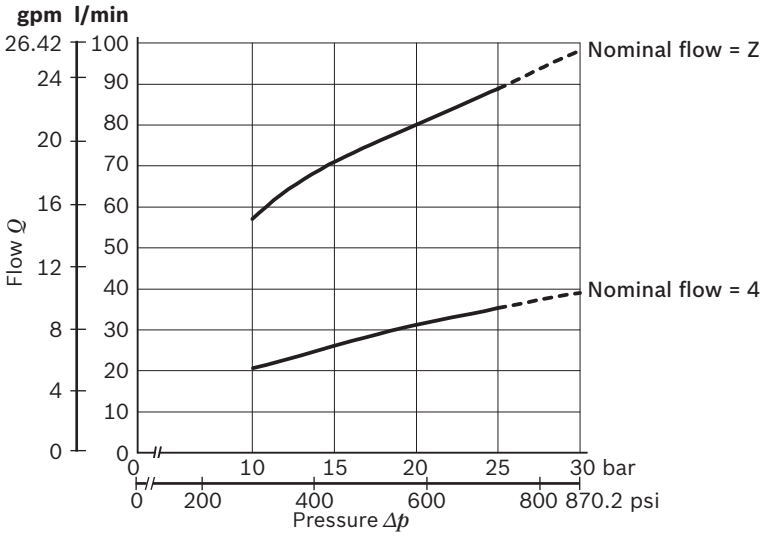

Pressure differential across the spool (ΔPls)

LS drain

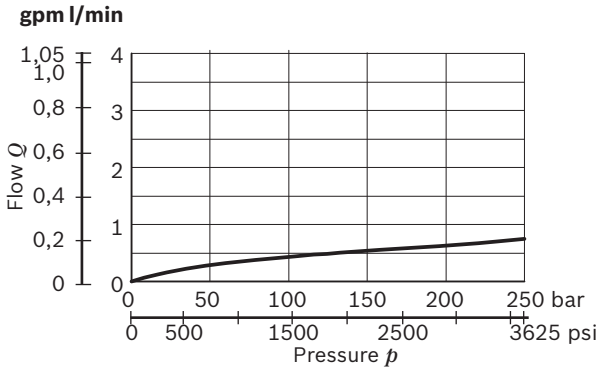

Pressure drop Δp = Δp(Q) (P_{IN}- P_{OUT}) to the next section

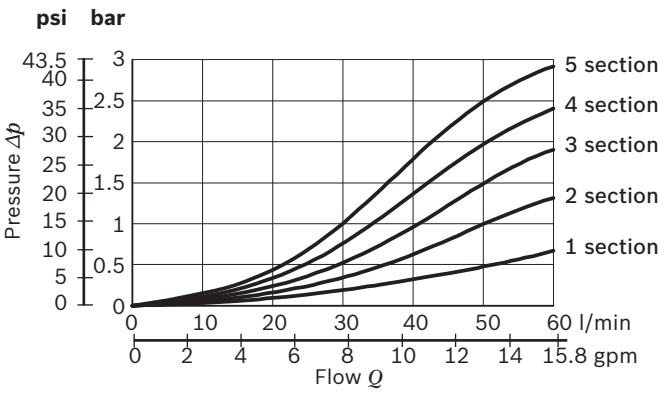

Pressure drop Δp = Δp(Q) with spool B2SZ

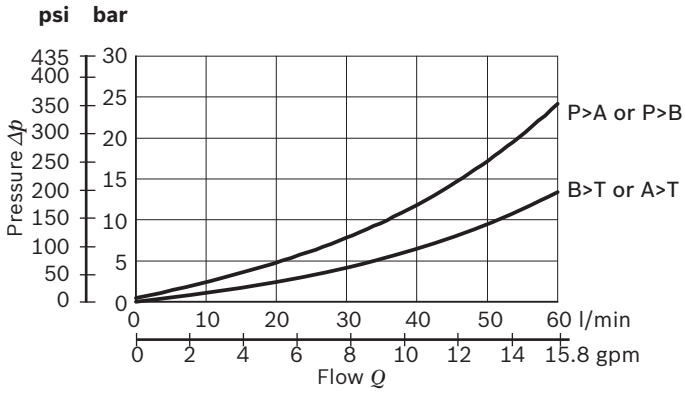

The curves refer to the spool fully open.
Measured with hydraulic fluid ISO-VG32 at 45° ±5 °C (113° ±9 °F); ambient temperature 20 °C (68 °F).
The curves refer to the spool fully open.

External dimensions and fittings

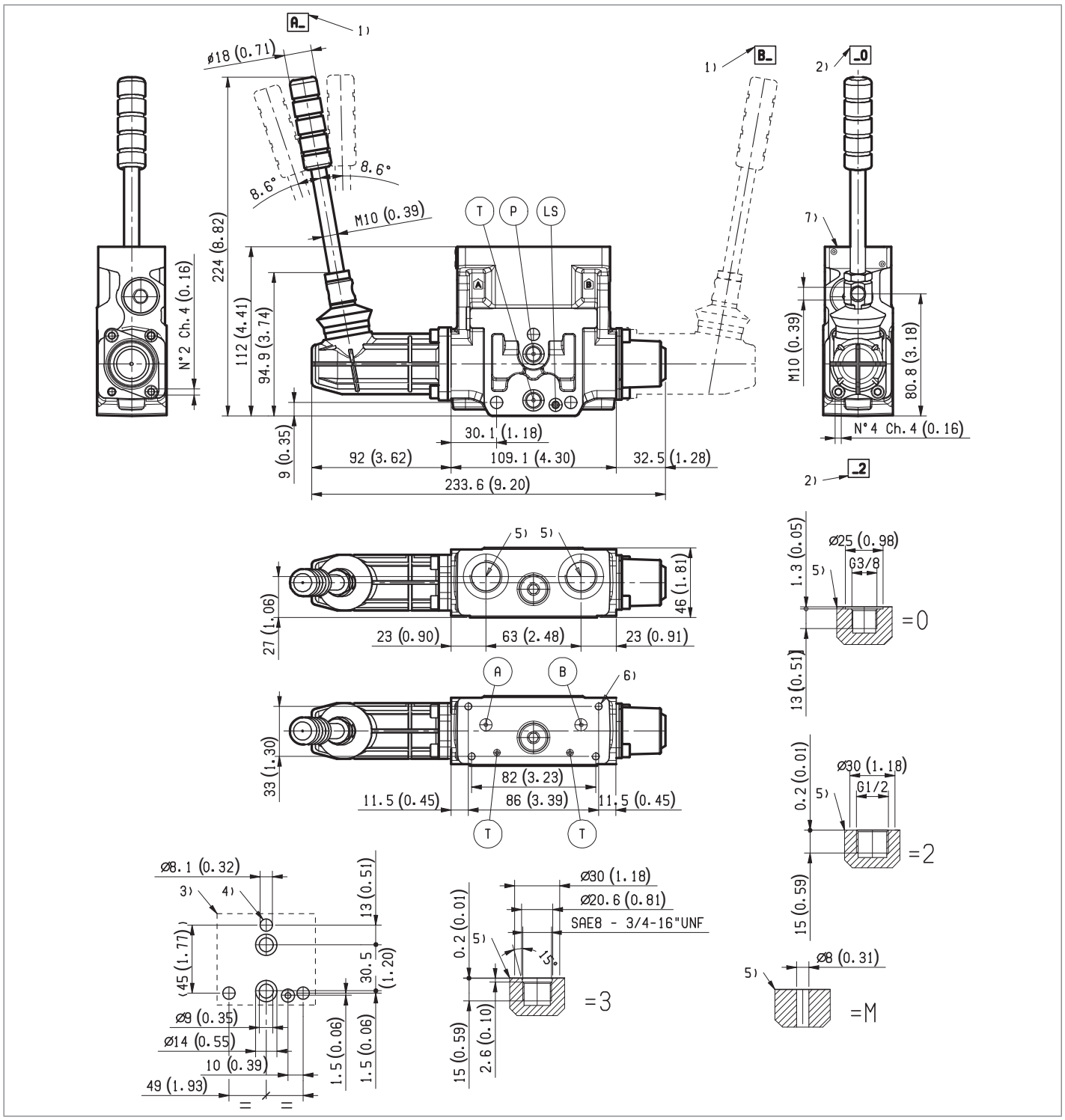

1 Side with the control lever (standard is side A).
2 Hand lever orientation.
3 Flange specifications for coupling to ED intermediate elements.
4 For tie rod and tightening torque information see data sheet RE18301-90
5 A and B ports.
6 Four threaded holes M5 deepth 12mm(0.47inch) for fitting a secondary flangeable element. Bolts M5 with reccomended strenght class DIN8.8: toque 5-6Nm(3.6-4.4ft-lb)(only for version with modular secondary valves).
7 Identification label.

RE 1 30 17/02 2012 Bosch Rexroth AG

Modular directional valves
Intermediate elements

Designation	Description	Size	Code	Data sheet	Page
Intermediate elements with check valves for emergency pump	TI-00	Size 6	TI-00_	18301-25	669
Intermediate elements with pressure reducer, and relieving	TI-03	Size 6	TI-03_	18301-26	673
Intermediate elements with flow regulator on P line	TI-04	Size 6	TI-04_	18301-27	677
Intermediate elements with 2 way compensator, and with LS connections	TI-C2	Size 6	TI-C2_	18301-28	683
Intermediate elements with double acting hand pump	EPM-DE-18	Size 6		18301-30	687

Intermediate elements with check valves for emergency pump

TI-00-__-

Description

The intermediate elements TI-00-__- are designed to be fitted between two directional valve elements. They are available with check valve in (P) line, or in (T) line , or in both (P) and (T) line.
With the check valve on (P) line, they are normally fitted to allow free flow from (P) to (P1) and prevent reverse flow from (P1) to (P).
With the check valve on (T) line, they are normally fitted to allow free flow from (T1) to (T), and to prevent reverse flow (T) to (T1).

Technical data

General		
Weight TI-00-PT-..	kg (lbs)	0.54 (1.19)
Weight TI-00-0P-..	kg (lbs)	0.52 (1.15)
Weight TI-00-0T-..	kg (lbs)	0.52 (1.15)
Ambient Temperature	°C (°F)	–20....+50 (-4....+122) (NBR seals)
Hydraulic		
Maximum pressure	bar (psi)	250 (3625)
Maximum inlet flow	l/min (gpm)	50 (13.2)
Hydraulic fluid General properties: it must have physical lubricating and chemical properties suitable for use in hydraulic systems such as, for example:		Mineral oil based hydraulic fluids HL (DIN 51524 part 1). Mineral oil based hydraulic fluids HLP (DIN 51524 part 2). For use of environmentally acceptable fluids (vegetable or polyglycol base) please consult us.
Fluid Temperature	°C (°F)	–20....+80 (-4....+176) (NBR)
Permissible degree of fluid contamination		ISO 4572: $\beta_x \geq 75$ X=12...15 ISO 4406: class 20/18/15 NAS 1638: class 9
Viscosity range	mm^2/s	5....420

Pressure drop through the check valves P>P1 and T1>T

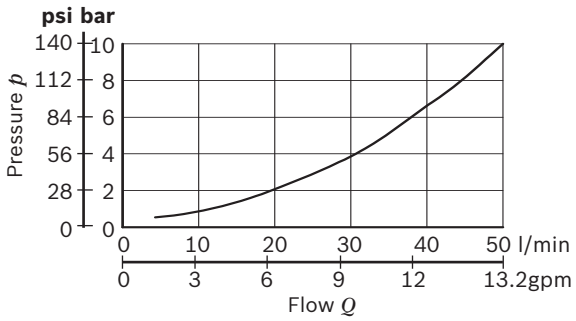

Note
For applications with different specifications consult us

RF 1030 - 25/02.2016, Bosch Rexroth AG
669

Ordering details

01		02		03		04		05
TI	**-**	**00**	**-**		**-**	**01**	**-**	**AL**

Family

01	Intermediate Elements	**TI**

Configuration

02	With checking valves for emergency pump	**00**

Check valve position

03	On pressure line P	**0P**
	On tank line T	**0T**
	On both lines P and T	**PT**

Cracking pressure

04	1 bar (14,5 psi)	**01**

Material

05	Aluminium	**AL**

Symbols

TI-00-PT

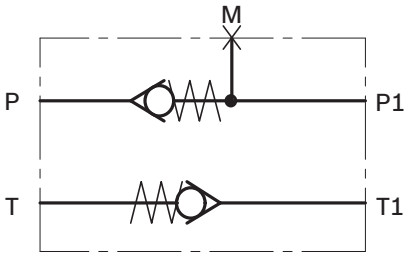

TI-00-0P

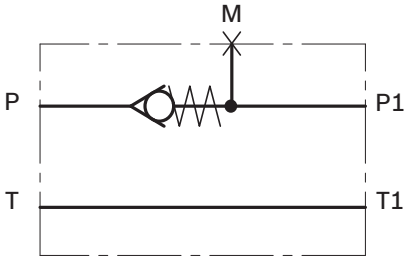

TI-00-0T

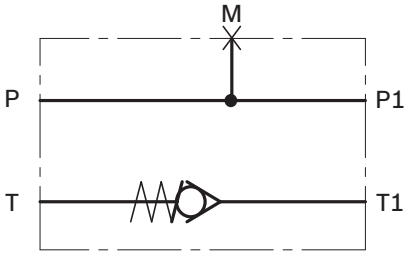

External dimensions and fittings

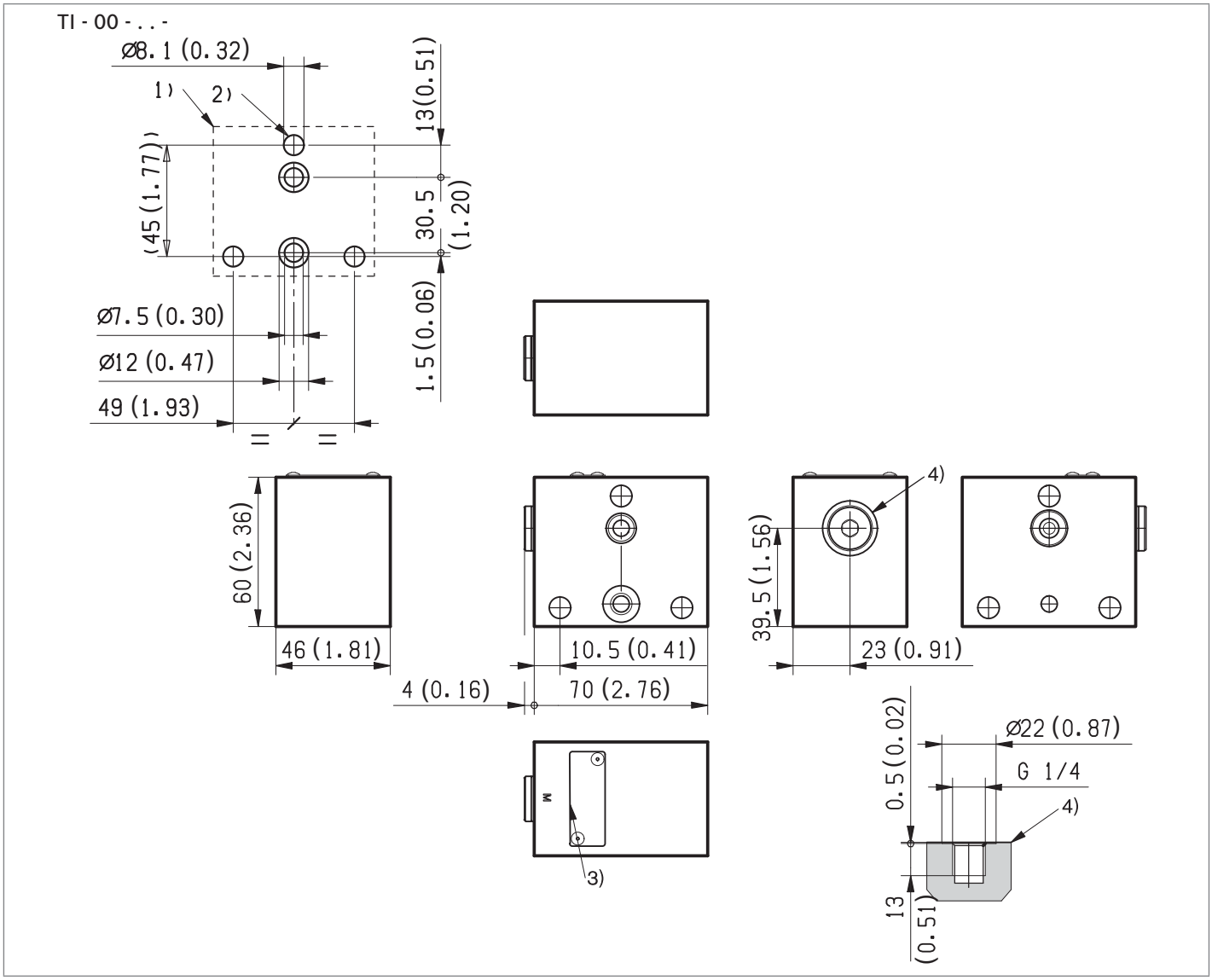

1 Flange specifications for coupling to ED intermediate elements.
2 For tie rod and tightening torque information see data sheet RE 18301-90.
3 Identification label.
4 Test point for pressure gauge connection (plugged).

Dimensions [mm (inches)]

Intermediate elements with pressure reducer, and relieving

TI-03-__-

Description

The intermediate elements TI-03-__- are designed to be fitted between two directional valve elements. They have a pressure reducing and relieving cartridge which supplies a flow with constant reduced pressure to the downstream operators.

The same cartridge relieves to Tank directly any excessive pressure surge in the downstream line.

These elements basically consist of a stackable aluminium housing, with a VRPX-10A type pressure reducing cartridge.

Technical data

General			
Weight Intermediate element without cartridge TI-03-00-00-AL		kg (lbs)	0.42 (0.93)
Weight Intermediate element with cartridge TI-03-00-_ _-AL		kg (lbs)	0.62 (1.37)
Ambient Temperature	°C (°F)	–20....+50 (-4....+122) (NBR seals)	
Hydraulic			
Maximum pressure	bar (psi)	250 (3625)	
Maximum inlet flow	l/min (gpm)	50 (13.2)	
Hydraulic fluid General properties: it must have physical lubricating and chemical properties suitable for use in hydraulic systems such as, for example:		Mineral oil based hydraulic fluids HL (DIN 51524 part 1). Mineral oil based hydraulic fluids HLP (DIN 51524 part 2). For use of environmentally acceptable fluids (vegetable or polyglycol base) please consult us.	
Fluid Temperature	°C (°F)	–20....+80 (-4....+176) (NBR)	
Permissible degree of fluid contamination		ISO 4572: $\beta_x \geq 75$ X=10...12 ISO 4406: class 19/17/14 NAS 1638: class 8	
Viscosity range	mm^2/s	5....420	

Note

For applications with different specifications consult us

Ordering details

01		02				03		04
TI	**-**	**03**	**-**	**00**	**-**		**-**	**AL**

Family

01	Intermediate Elements	**TI**

Configuration

02	with pressure reducer, and relieving	**03**

Pressure reducing valve range

03	35-140bar (500-2000 psi)	**V1**
	70-250bar (1000-3625 psi)	**V2**

Material

04	Aluminium	**AL**

Symbols

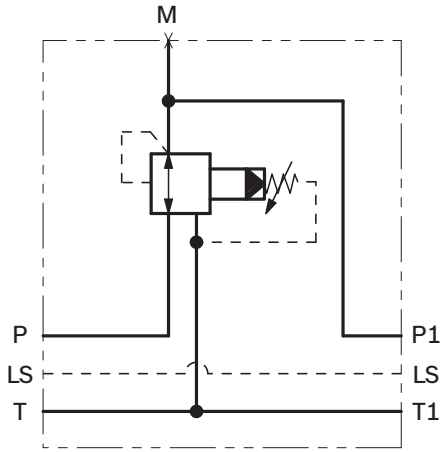

External dimensions and fittings

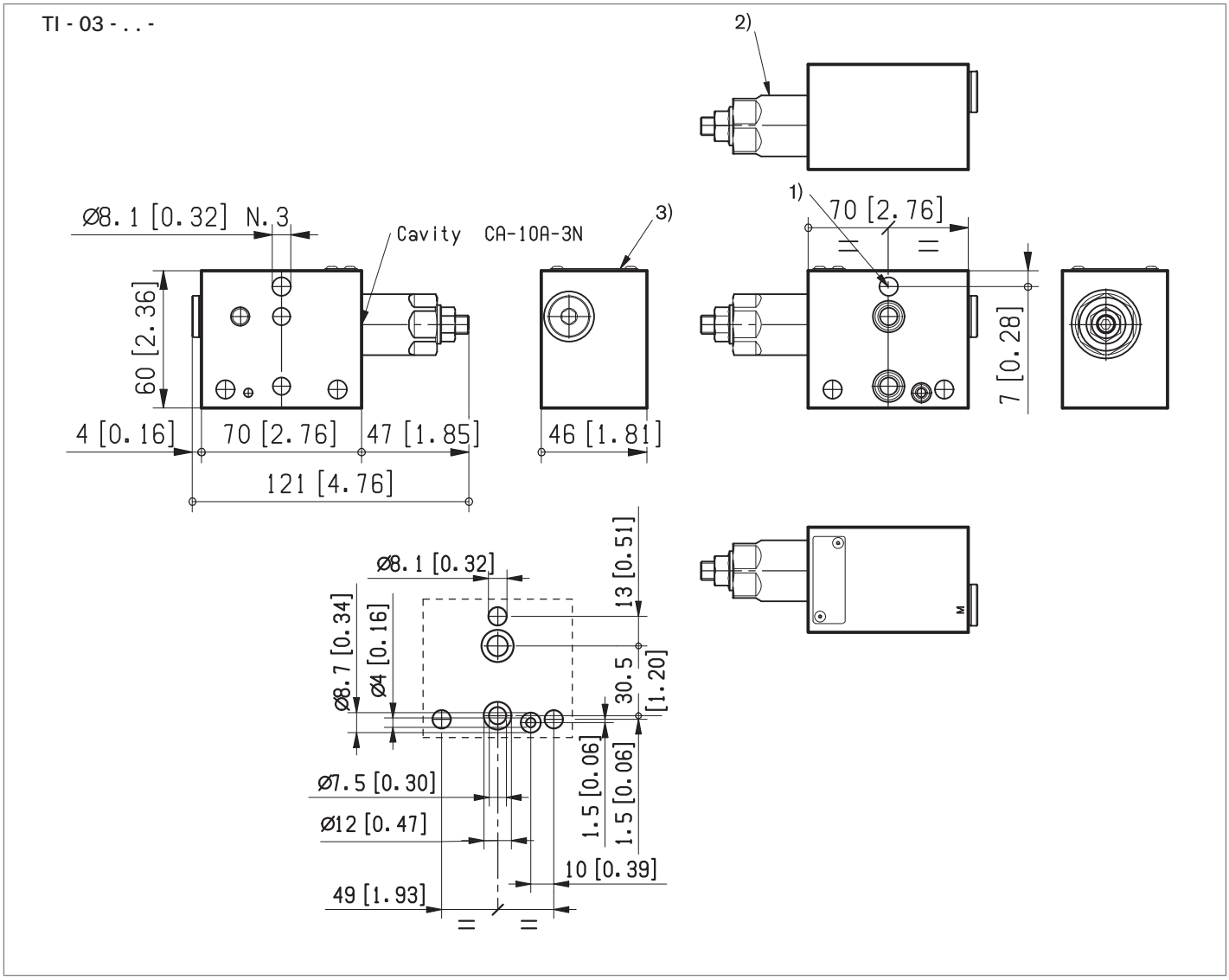

1 For tie rod and tightening torque information see data sheet RE 18301-90.
2 Pressure reducing and relieving cartridge VRPX.
3 Identification label.
4 Test point for pressure gauge connection.

Intermediate elements with flow regulator on P line

TI-04-__-

Description

The intermediate elements TI-04-__- are designed to be fitted between two directional valve elements. Different hydraulic layout can be choice with different ordering codes.

Material: the body is made of black anodized Aluminium (AL), or of yellow Zinc plated (Cr+3) Cast Iron (CI).

Technical data

General				
Weight TI-04-00-AL		kg (lbs)	0.74	(1.63)
Weight TI-04-01-AL		kg (lbs)	0.84	(1.85)
Weight TI-04-02-AL-..-..		kg (lbs)	1.08	(2.38)
Weight TI-04-00-CI		kg (lbs)	1.10	(2.42)
Weight TI-04-03-CI		kg (lbs)	1.33	(2.93)
Ambient Temperature	°C (°F)	–20....+50 (-4....+122) (NBR seals)		
Hydraulic				
Maximum inlet flow	l/min (gpm)	50 (13.2)		
Maximum pressure TI-Aluminium	bar (psi)	250 (3625)		
Maximum pressure TI-Cast Iron	bar (psi)	310 (4495)		
Hydraulic fluid General properties: it must have physical lubricating and chemical properties suitable for use in hydraulic systems such as, for example:		Mineral oil based hydraulic fluids HL (DIN 51524 part 1). Mineral oil based hydraulic fluids HLP (DIN 51524 part 2). For use of environmentally acceptable fluids (vegetable or polyglycol base) please consult us.		
Fluid Temperature	°C (°F)	–20....+80 (-4....+176) (NBR)		
Permissible degree of fluid contamination		ISO 4572: $\beta_x \geq 75$ X=10...12 ISO 4406: class 19/17/14 NAS 1638: class 8		
Viscosity range	mm^2/s	5....420		

Note

For applications with different specifications consult us

Ordering details

TI0401AL (with mechanical cartrige valve, not pressure compensated)

01			02			03
TI	**-**	**04**	**-**		**-**	**AL**

Family

01	Intermediate Elements	**TI**

Configuration

02	without cartridge valve	**00**
	with mechanical cartridge valve, not pressure compensated 0-40l/min (0-10.57gpm)	**01**

Material and Cavity

03	Alluminium CA08A2N	**AL**

TI0402AL (with on off electrical cartridge valve, normally closed)

01			02		03		04		05
TI	**-**	**04**	**-**		**-**	**AL**	**-**		**-**	

Family

01	Intermediate Elements	**TI**

Configuration

02	without cartridge valve	**00**
	with electrical cartridge valve, normally closed 0-40l/min (0-10.57gpm)	**02**

Material and Cavity

03	Alluminium CA08A2N	**AL**

Cartridge voltage supply

04	No cartdrige (omit)	**__**
	12V DC	**OB**
	24V DC	**OC**

Electric connections

05	No cartdrige (omit)	**__**
	With coils, without mating connector DIN EN 175301-803	**01**
	With coils, with bi-directional diode, without mating connector vertical Amp-Junior	**03**
	With coils, without mating mating connector DT04-2P	**07**

TI0403CI (with mechanical cartrige valve, pressure compensater)

01			02			03
TI	**-**	**04**	**-**		**-**	**CI**

Family

01	Intermediate Elements	**TI**

Configuration

02	without cartridge valve	**00**
	with mechanical cartrige valve, pressure compensated 0.2-30l/min (0.05-7.92gpm)	**03**

Material and Cavity

03	Cast Iron CA08A2N	**CI**

Symbols

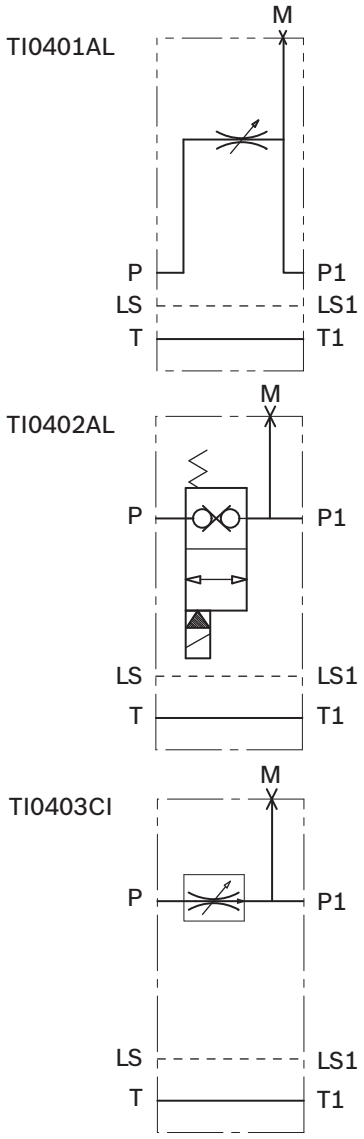

External dimensions and fittings

TI0401AL (with mechanical cartrige valve, not pressure compensated)

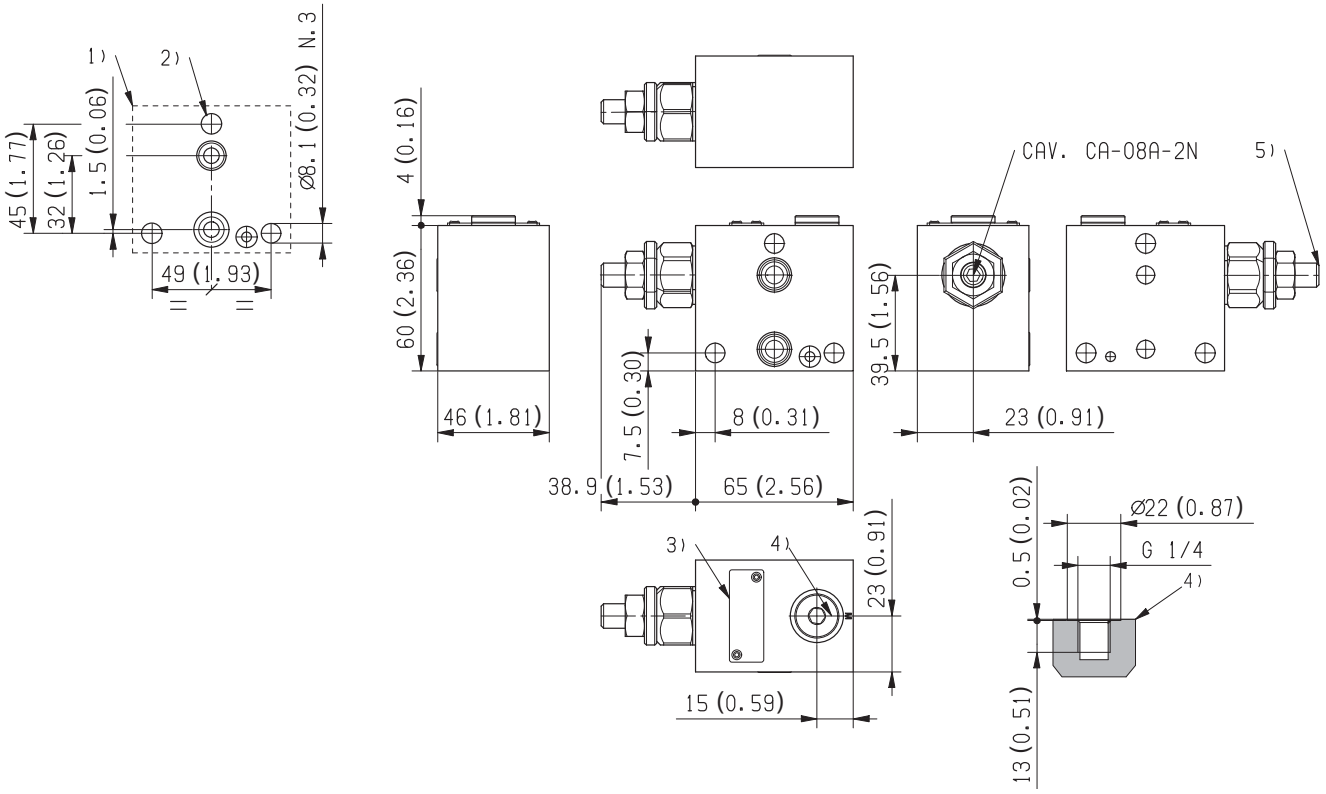

1 Flange specifications for coupling to ED intermediate elements.
2 For tie rod and tightening torque information see data sheet RE 18301-90.
3 Identification label.
4 Test point M(G 1/4) for pressure gauge connection.
5 Flow regulator cartridge ST-C-06.

TI0402AL (with on off eletrical cartridge valve, normally closed)

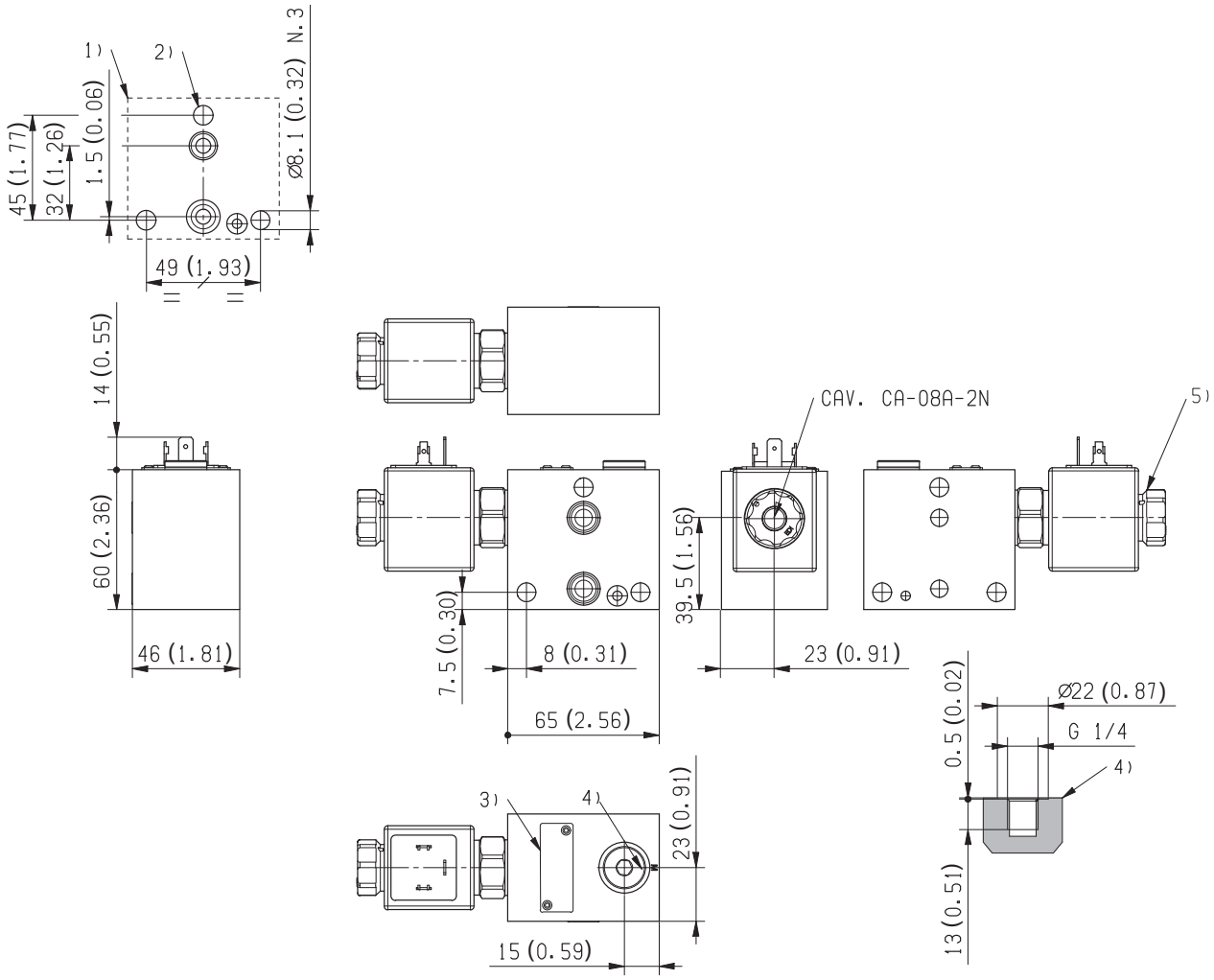

1 Flange specifications for coupling to ED intermediate elements.
2 For tie rod and tightening torque information see data sheet RE 18301-90.
3 Identification label.
4 Test point M(G 1/4) for pressure gauge connection.
5 Electrical valve 40 l/min (10,57 gpm).

TI0403CI (with mechanical cartrige valve, pressure compensater)

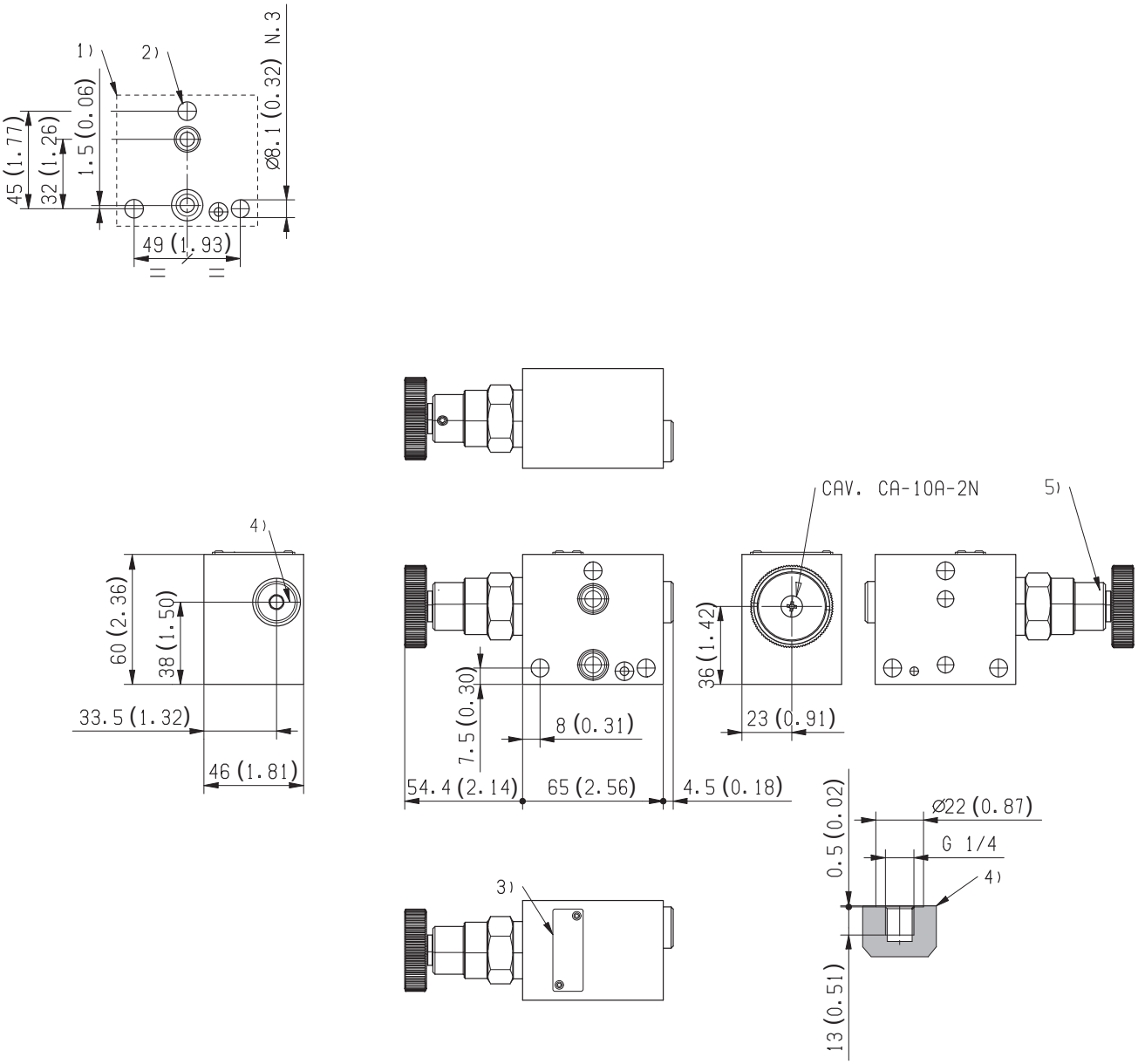

1 Flange specifications for coupling to ED intermediate elements.
2 For tie rod and tightening torque information see data sheet RE 18301-90.
3 Identification label.
4 Test point M(G 1/4) for pressure gauge connection.
5 Regulated flow range 0.2÷30 l/min (0.05÷7,92 gpm).

Bosch Rexroth AG, RE 18830-2, 2020-09-30

Intermediate Elements with 2 way compensator, and with LS connections

TI-C2-__-__

Description

The sandwich plate design directional valve elements TI-C2-__-... basically consist of a stackable housing with a 2 way compensator controlled by the LS pressure signal. The normally open compensator maintains a constant pressure difference between the P1 (outlet) line and the LS pressure; the result is a constant oil flow to the P1 port for the downstream operators, independently from the working pressure.
The excess oil must be unloaded to tank through a relief valve.
The stackable housing is made of Yellow Zinc plated (Cr+3) Cast Iron.

Technical data

General		
Valve element TI-C2-__-	kg (lbs)	1.7 (3.75)
Ambient Temperature	°C (°F)	–20....+50 (-4....+122) (NBR seals)
Hydraulic		
Maximum pressure	bar (psi)	310 (4500)
Maximum inlet flow	l/min (gpm)	30 (7.9)
Hydraulic fluid General properties: it must have physical lubricating and chemical properties suitable for use in hydraulic systems such as, for example:		Mineral oil based hydraulic fluids HL (DIN 51524 part 1). Mineral oil based hydraulic fluids HLP (DIN 51524 part 2). For use of environmentally acceptable fluids (vegetable or polyglycol base) please consult us.
Fluid Temperature	°C (°F)	–20....+80 (-4....+176) (NBR)
Permissible degree of fluid contamination		ISO 4572: $\beta_x \geq 75$ X=12...15 ISO 4406: class 20/18/15 NAS 1638: class 9
Viscosity range	mm^2/s	5....420

Note
For applications with different specifications consult us

RF 1630 | 28/02 2016 Bosch Rexroth AG
683

Ordering details

01		02		03		04
TI	**-**	**C2**	**-**	**M0**	**-**	**00**

Family

01	Intermediate Elements	**TI**

Configuration

02	with 2 way compensator, and with LS connections	**C2**

Compensator spring

03	Setting 6 bar (87 psi)	**M0**

Version

04	Standard	**00**

Symbol

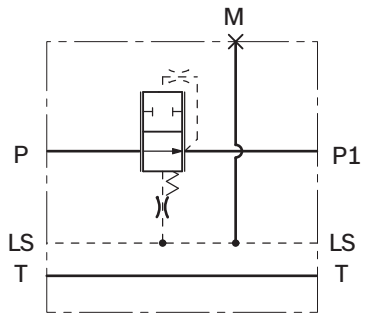

Characteristic curves

Pressure function

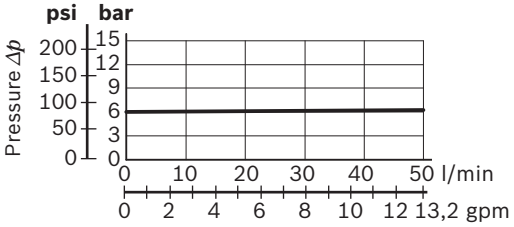

Compensated flow curves

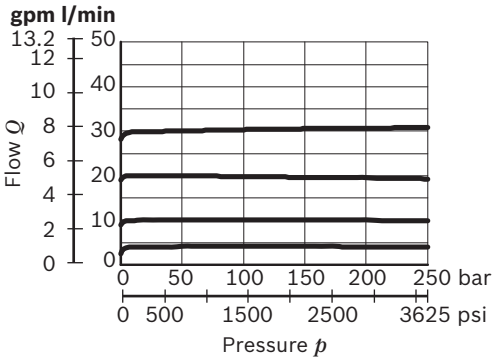

External dimensions and fittings

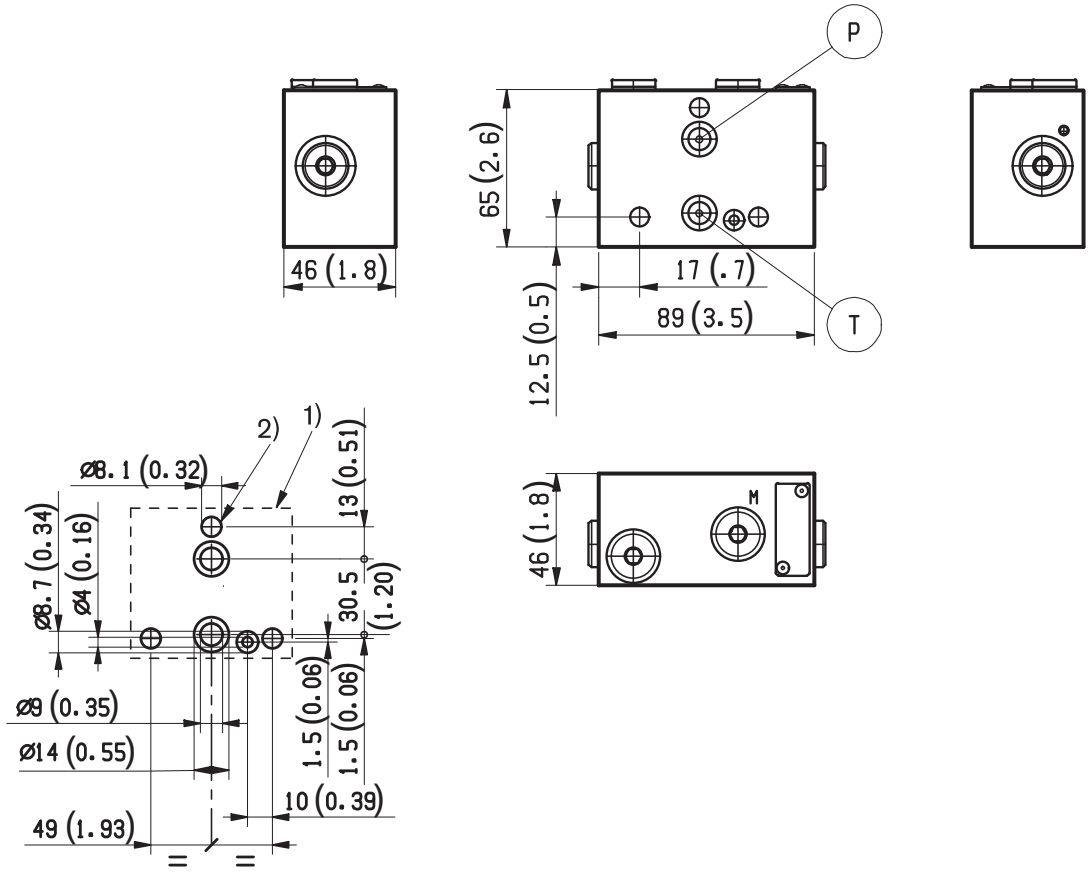

1 Flange specifications for coupling to ED intermediate elements.
2 For tie rod and tightening torque information see data sheet RE 18301-90.

Dimensions [mm (inches)]

Intermediate Elements
Intermediate elements with double acting hand pump

EPM-DE-18

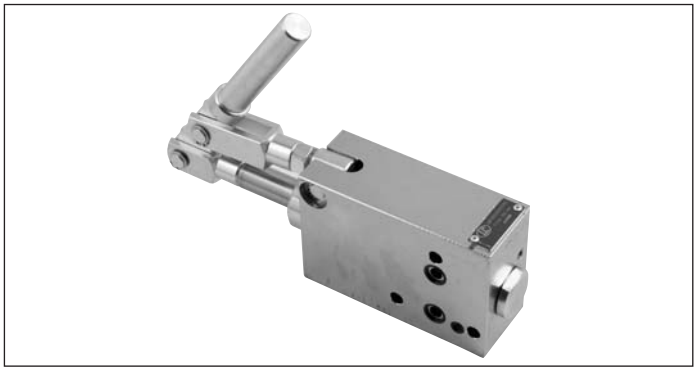

Description

It is reccomended to install this intermediate plate with auxiliary hand pump between the inlet plate and the ED modular directional valves.
It is also reccomended that the intermediate plate with auxiliary hand pump is under head.
When used with LS directional valve, please provide a mean to close the LS signal going to the pump.
When used with open center compensator (e.g. TE-06) select a compensator that can be locked in closed position.

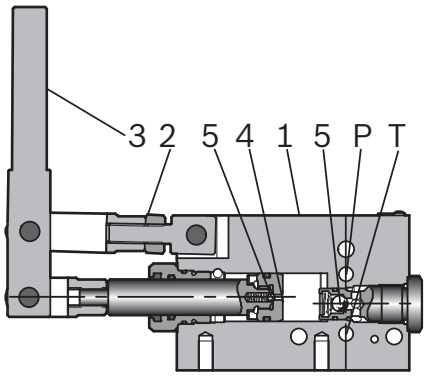

Technical data

General		
Weight of the EPM (hand pump slice)	kg (lbs)	3.8 (8.4)
Weight of the extension lever	kg (lbs)	0.7 (1.5)
Ambient Temperature	°C (°F)	–20....+50 (-4....+122) (NBR seals)
Hydraulic		
Maximum resistance pressure	bar (psi)	310 (4500)
Maximum generated pressure	bar (psi)	250 (3625)
Total displacement	cc (in^3)	18 (1.08)
Opening displacement	cc (in^3)	8.5 (0.51)
Closing displacement	cc (in^3)	9.5 (0.57)
Maximum aspiration height	m (ft)	1.5 (4.92) (with pipe DN6)
Hydraulic fluid General properties: it must have physical lubricating and chemical properties suitable for use in hydraulic systems such as, for example:		Mineral oil based hydraulic fluids HL (DIN 51524 part 1). Mineral oil based hydraulic fluids HLP (DIN 51524 part 2). For use of environmentally acceptable fluids (vegetable or polyglycol base) please consult us.
Fluid Temperature	°C (°F)	–20....+80 (-4....+176) (NBR)
Permissible degree of fluid contamination		ISO 4572: $\beta_x \geq 75$ X=12...15 ISO 4406: class 20/18/15 NAS 1638: class 9
Viscosity range	mm^2/s	5....420
Maximum internal leakage	cc/min (in^3/min)	0.2 (0.012)

Note
For applications with different specifications consult us

RF 1080 - 30/02.2016, Bosch Rexroth AG

687

Ordering details

Code	Description
L88700000000000	HAND PUMP ED (LEVER POINTING UP)
L88700000000001	EXTENTION LEVER FOR HAND PUMP ED
L88700000000002	HAND PUMP ED (LEVER POINTING DOWN)

Symbol

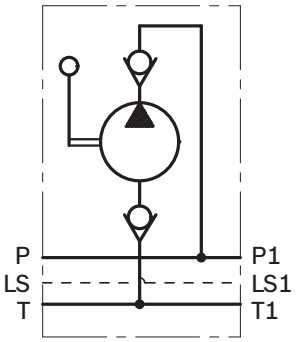

Characteristic curves

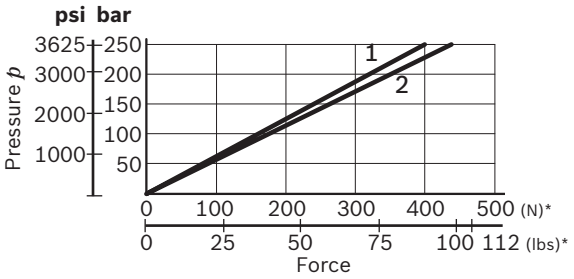

1: Opening stroke.
2: Closing stroke.
* Force applied by operator using our extension lever, length 457.5 mm (18 inch).

External dimensions and fittings

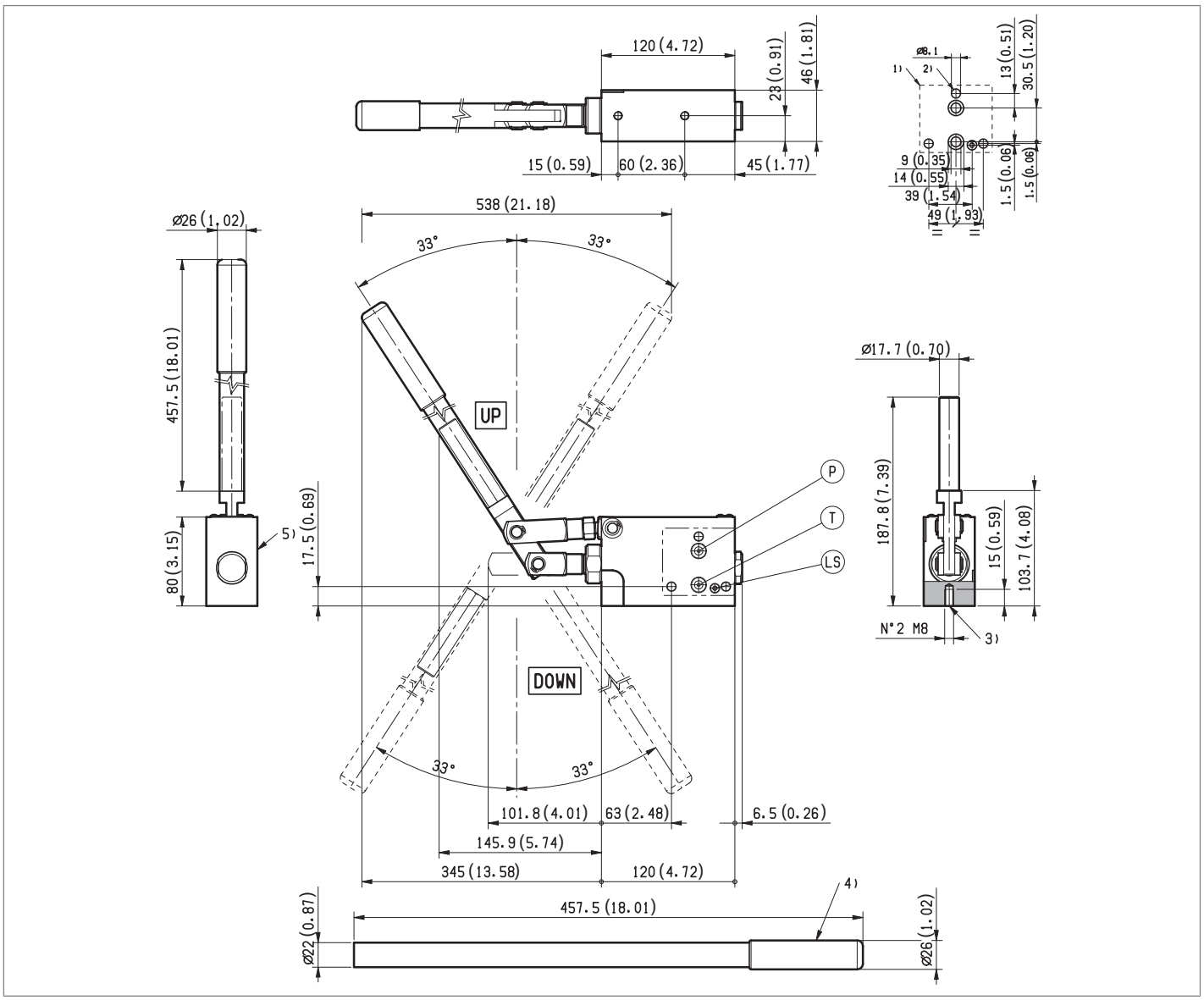

1 Flange specifications for coupling to ED intermediate elements.
2 For tie rod and tightening torque information see data sheet RE 18301-90.
3 N° 2 Fixing Hole. M8. tightening torque 35-40 Nm. (26-29.5ft-lbs).
4 Optional extension lever. (See ordering code).
5 Side of position of inlet plate.

Dimensions [mm (inches)]

Modular directional valves
Flangeable elements

Designation	Description	Ports/Size	Code	Data sheet	Page
Flangeable elements with single or double acting cross piloted check valves	EDM-VR	G 3/8 / Size 6	L8840_	18301-40	693
Flangeable elements with secondary pressure relief valves single or double	EDM-VM	G 3/8 / Size 6	L8860_	18301-41	697
Flangeable elements with unidirectional flow controls for meter-in or meter-out	EDM-VF	G 3/8 / Size 6	L8850_	18301-42	703
Flangeable elements with cross piloted counterbalance valves	EDM-VB	G 3/8 / Size 6	L8835_	18301-43	707
Flangeable elements with 2/2 on-way solenoid cartridges valves	EDM-VEI	G 3/8 / Size 6	L8875_	18301-44	711
Flangeable elements with single or double secondary pressure relief valves and anti-cavitation function	EDCM/ EDCMF-VM	G 3/8, G 1/2, SAE 8 /Size 6	L8565_	18301-45	715
Flangeable elements with single or double acting, cross piloted check valves	EDCM/ EDCMF-VR	G 3/8, G 1/2, SAE 8 /Size 6	L8541_	18301-46	719
Flangeable elements with secondary pressure relief valves single or double	EDCM/ EDCMF-VM5	G 3/8, G 1/2	L8561_	18301-47	723

Flangeable elements with single or double acting Cross Piloted Check Valves

EDM-VR

Description

The secondary flangeable elements EDM-VR-__ can be interfaced and bolted on top of the A and B ports of the ED elements of the Directional Valve Assembly.
They incorporate two Cross Piloted Check Valves which allow free flow toward the A and B outlet ports, and lock in a leak free mode the flow returning from the actuator, until sufficient pilot pressure is built up in the opposite line and the check valve is opened.
Depending on the version selected (AB, or 0A, or 0B), the PO Check Valve is in both A and B ports, or in A port only, or in B port only (see hydraulic symbols).
The Pilot Ratio is 4:1, consequently, the pilot pressure needs to be at least 1/4, or 25% of the load induced pressure in the actuator before the Check Valve opens, and oil can return to tank.
The body of the EDM-VR- elements is made of Black Anodized Aluminium (AL). Hydraulic Ports A2 and B2 are size G 3/8.

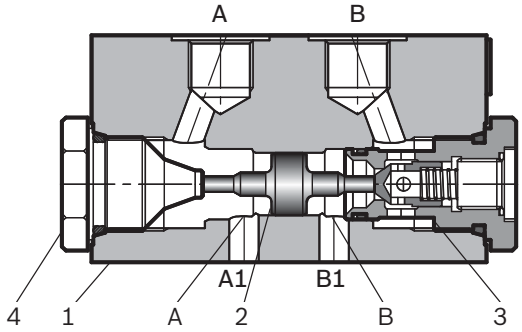

Technical data

General		
Weight EDM-VR AB and A/B	kg (lbs)	0.8 (1.76)
Ambient Temperature	°C (°F)	–20....+50 (-4....+122) (NBR seals)
Hydraulic		
Maximum pressure	bar (psi)	250 (3625)
Maximum flow	l/min (gpm)	50 (13.2)
Hydraulic fluid General properties: it must have physical lubricating and chemical properties suitable for use in hydraulic systems such as, for example:		Mineral oil based hydraulic fluids HL (DIN 51524 part 1). Mineral oil based hydraulic fluids HLP (DIN 51524 part 2). For use of environmentally acceptable fluids (vegetable or polyglycol base) please consult us.
Fluid Temperature	°C (°F)	–20....+80 (-4....+176) (NBR)
Permissible degree of fluid contamination		ISO 4572: $\beta_x \geq 75$ X=12...15 ISO 4406: class 20/18/15 NAS 1638: class 9
Viscosity range	mm^2/s	5....420

Note
For applications with different specifications consult us

Ordering details

01	02	03	04	05	06		
L	**88**	**40**			**00**	**0**	**0**

Family

01	Directional Valve elements ED	**L**

Model

02	Flangeable element secondary valves	**88**

Type

03	Cross Piloted Check Valves	**40**

Configuration

04	Check Valves for both A and B ports	**00AB**
	Check Valve for port A only	**000A**
	Check Valve for port B only	**000B**

Cracking Pressure

05	0.5 bar (7.3 psi)	**01**
	4 bar (58 psi)	**04**

Ports

06	G 3/8 DIN 3852	**0**

Symbols

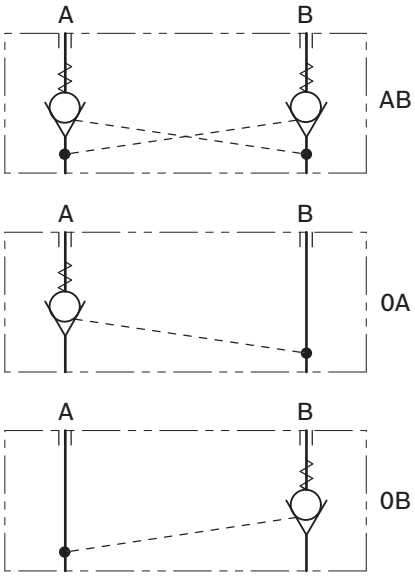

Characteristic curves

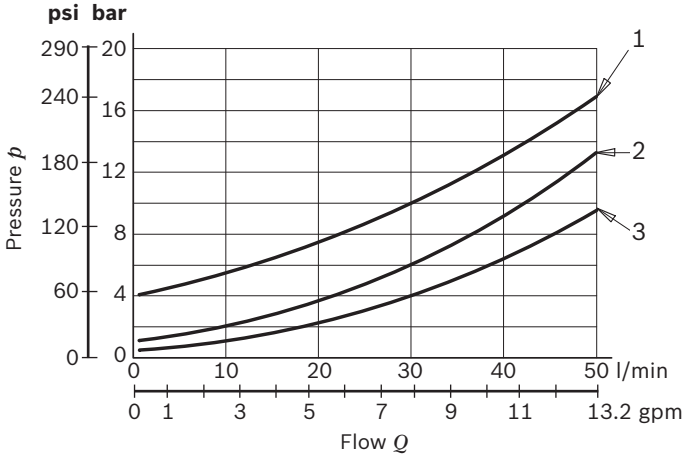

Cracking pressure	Curve no.
4 bar (58 psi) free flow either A1 > A2 or B1 > B2	1
0.5 bar (7.3 psi) free flow either A1 > A2 or B1 > B2	2
Returning flow, fully piloted, either A2 > A1 or B2 > B1	3

Measured with hydraulic fluid ISO-VG32 at 45° ±5 °C (113° ±9 °F); ambient temperature 20 °C (68 °F).

Dimensions [mm (inches)]

External dimensions and fittings

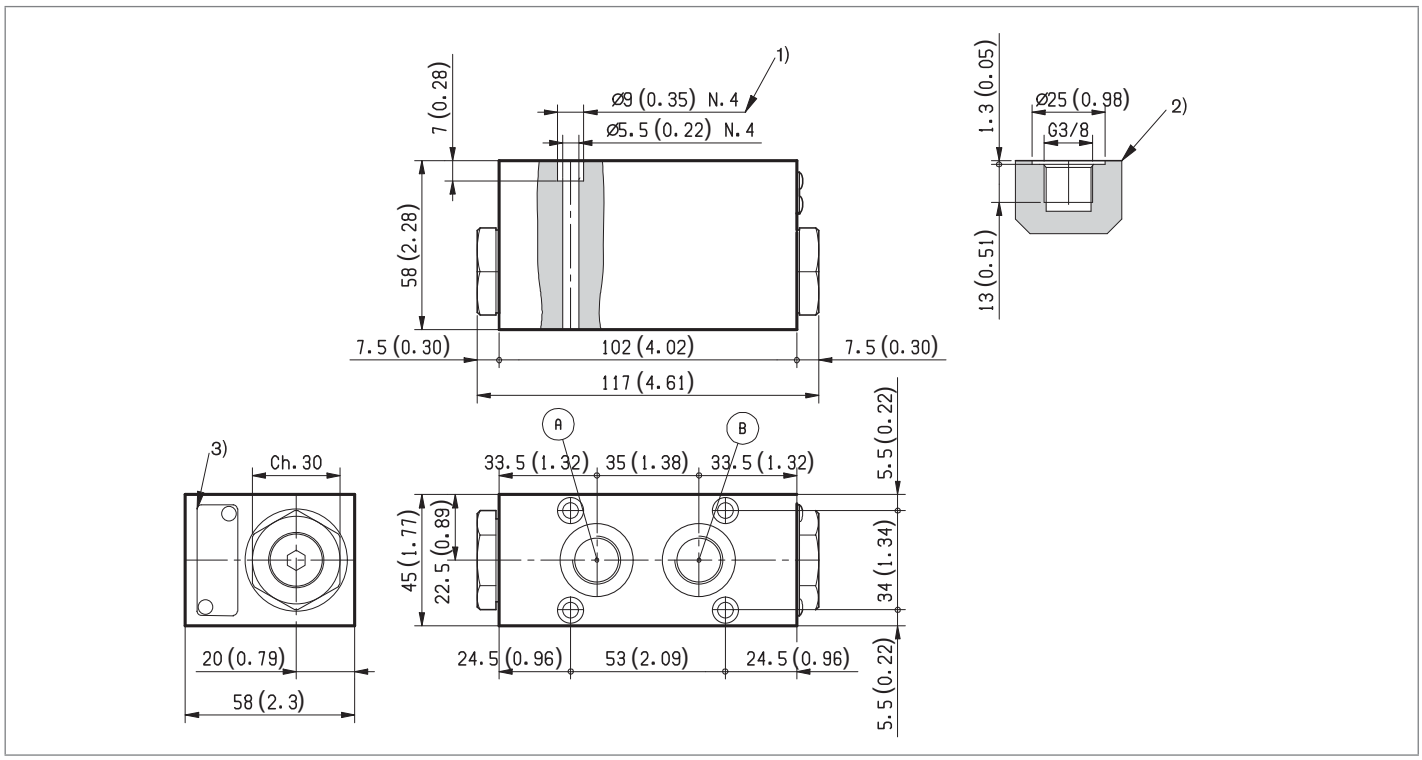

1 Four through holes Ø 5.5 mm (0.217 inch) for screws and tightening torques see data sheet RE 18301-90.
2 A and B ports for the actuator.
3 Identification label.

Flangeable elements with secondary pressure relief valves single or double

EDM-VM

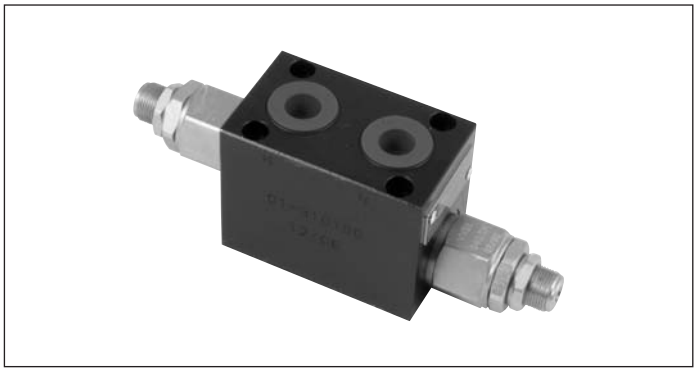

Description

The secondary flangeable elements EDM-VM-__ can be interfaced and bolted on top of the A and B ports of the ED elements of the Directional Valve Assembly.
The body (**1**) is made of black anodized aluminium, and it incorporates one or two direct acting pressure relief valves (**2**), fitted with cross-over configuration: the relief valve for line A releases the oil into line B and viceversa
The maximum secondary pressure in line A, or B, can be adjusted through the adjuster screw (**3**).

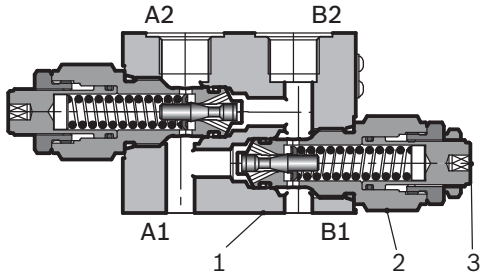

Technical data

General		
Weight EDM-VM-AB	kg (lbs)	0.79 (1.75)
Weight EDM-VM-0A (EDM-VM-0B)	kg (lbs)	0.61 (1.36)
Ambient Temperature	°C (°F)	–20....+50 (-4....+122) (NBR seals)
Hydraulic		
Maximum pressure	bar (psi)	250 (3625)
Maximum flow	l/min (gpm)	50 (13.2)
Hydraulic fluid General properties: it must have physical lubricating and chemical properties suitable for use in hydraulic systems such as, for example:		Mineral oil based hydraulic fluids HL (DIN 51524 part 1). Mineral oil based hydraulic fluids HLP (DIN 51524 part 2). For use of environmentally acceptable fluids (vegetable or polyglycol base) please consult us.
Fluid Temperature	°C (°F)	–20....+80 (-4....+176) (NBR)
Permissible degree of fluid contamination		ISO 4572: $\beta_x \geq 75$ X=10...12 ISO 4406: class 19/17/14 NAS 1638: class 8
Viscosity range	mm^2/s	5....420

Note

For applications with different specifications consult us

Ordering details

01	02	03	04	05	06		07	
L	**88**	**60**				**00**	**0**	**0**

Family

01	Directional Valve elements ED	**L**

Model

02	Flangeable element secondary valves	**88**

Type

03	Secondary pressure relief	**60**

Configuration

04	Pressure relief for both A and B ports	**02AB**
	Pressure relief for port A only	**020A**
	Pressure relief for port B only	**020B**

Pressare adjustment

05	Relief cartridge with adjuster screw	**S**
	Relief cartridge with hand-knob	**K**

Pressure range

06	25-120 bar (360-1740 psi)	**N**
	40-200 bar (580-2900 psi)	**B**
	150-350 bar (2175-5075 psi)	**V**

Ports

07	G 3/8 DIN 3852	**0**

Symbols

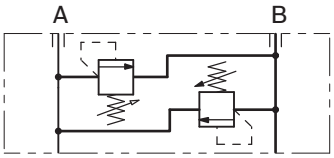

AB

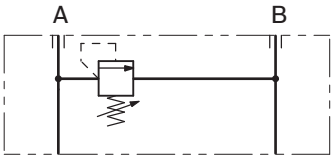

0A

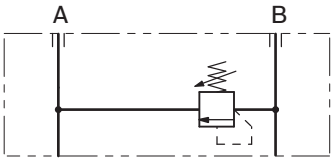

0B

Characteristic curves

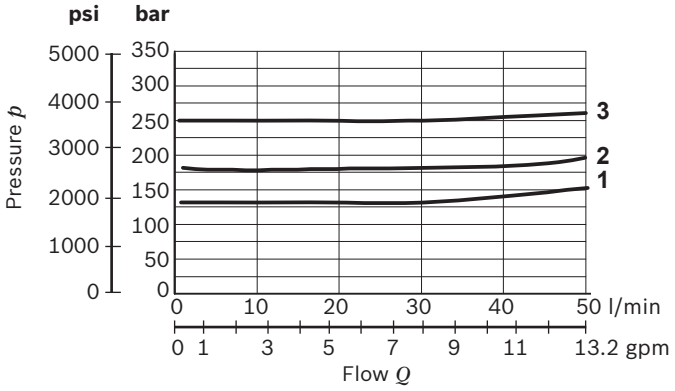

Pressure range and lowest adjustable level

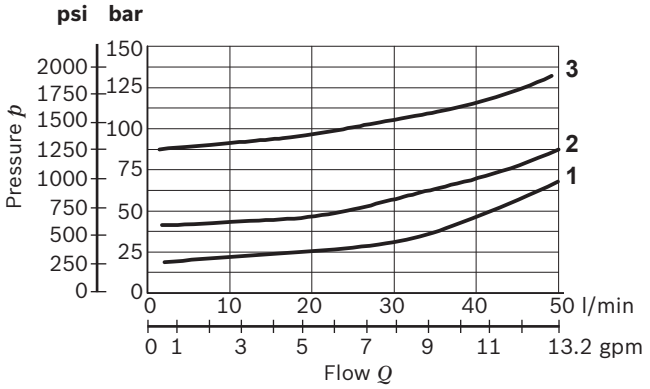

Pressure range	Curve no.
N (25-120 bar) (360-1740 psi)	1
B (40-200 bar) (580-2900 psi)	2
V (150-350 bar) (2175-5075psi)	3

Measured with hydraulic fluid ISO-VG32 at 45° ±5 °C (113° ±9 °F); ambient temperature 20 °C (68 °F).

Dimensions [mm (inches)]

External dimensions and fittings

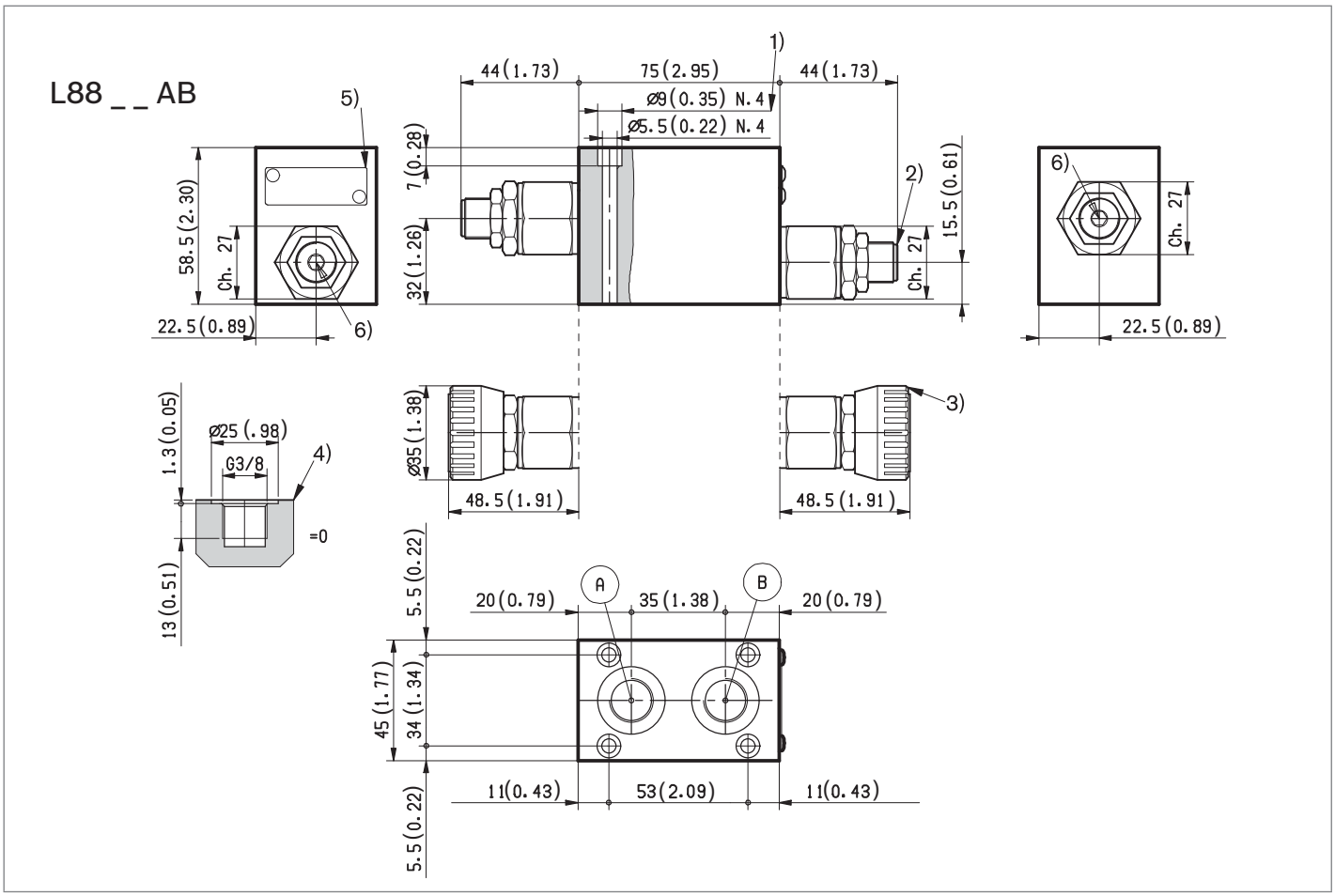

L88 _ _ 0A

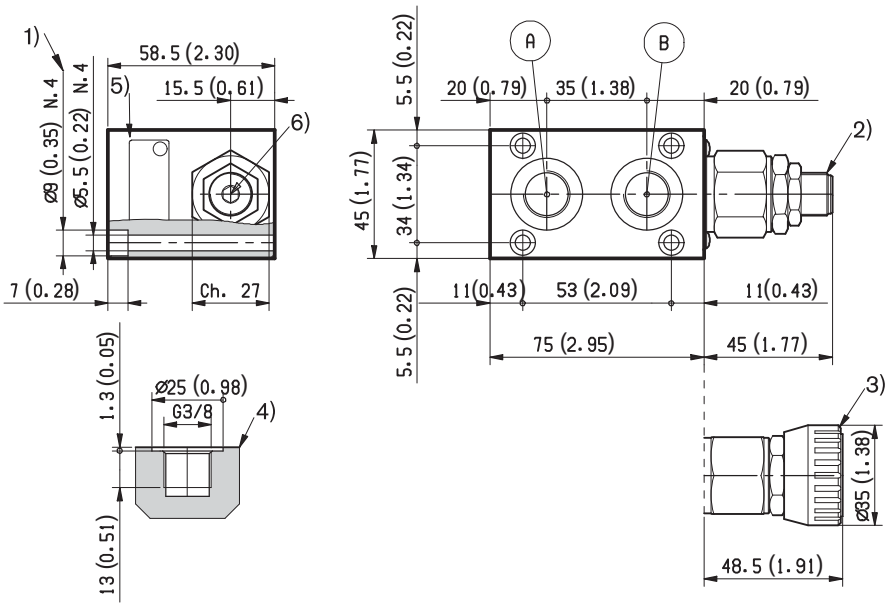

L88 _ _ 0B

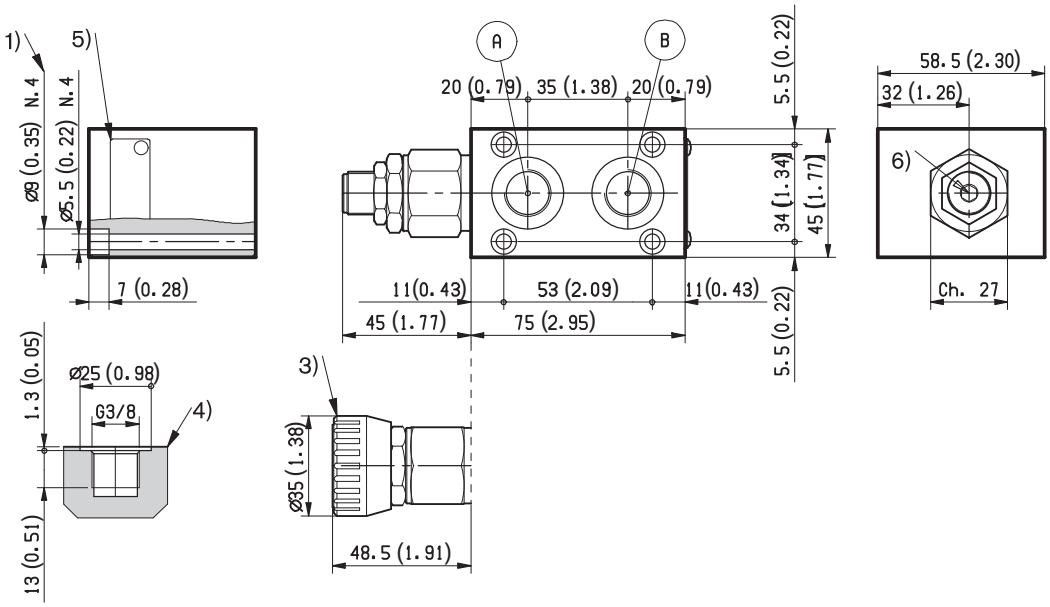

1 Four through holes Ø 5.5 mm (0.217 inch) for screws and tightening torques see data sheet RE 18301-90.
2 Pressure relief cartridge with adjuster screw.
3 Pressure relief cartridge with hand-knob type VMD1040 refer to RE 18301-91
4 A and B ports.
5 Identification label.
6 Hex 5 mm (0.2 inch) for setting pressure relief valves.

Flangeable elements with unidirectional flow controls for meter-in or meter-out

EDM-VF

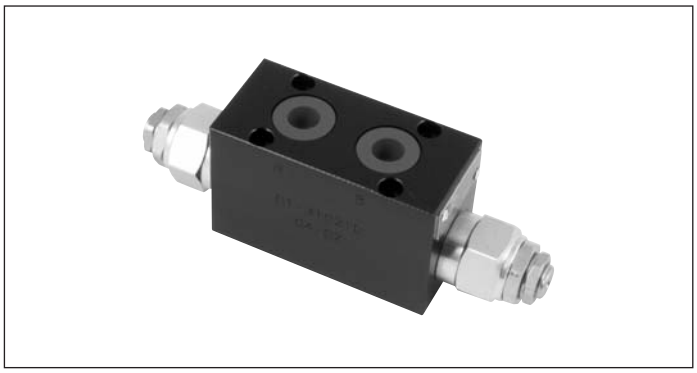

Description

The secondary flangeable elements EDM-VF-__ can be interfaced and bolted on top of the A and B ports of the ED elements of the Directional Valve Assembly.
They incorporate two unidirectional flow restrictors, and, depending on the version selected (01 AB, or 02 AB), they allow free flow A1>A2 and B1>B2, with and controlled/ restricted flow in the reverse directions A2>A1 and B2>B1, or vice-versa.
Also the single acting versions are available, with only one flow restrictor fitted either in side A or in side B.
The restrictors are adjustable through the adjuster screw 3.
The body of the EDM-VF- elements is made of Black Anodized Aluminium (AL). Hydraulic Ports A2 and B2 are size G 3/8.

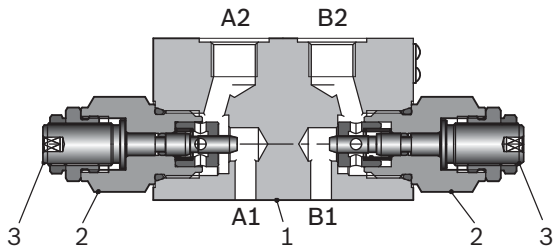

Technical data

General		
Weight EDM-VF version -AB-	kg (lbs)	0.89 (2.18)
Weight EDM-VF version -0B- (-0A-)	kg (lbs)	0.61 (1.36)
Ambient Temperature	°C (°F)	–20....+50 (-4....+122) (NBR seals)
Hydraulic		
Maximum pressure	bar (psi)	250 (3625)
Maximum flow	l/min (gpm)	50 (13.2)
Hydraulic fluid General properties: it must have physical lubricating and chemical properties suitable for use in hydraulic systems such as, for example:		Mineral oil based hydraulic fluids HL (DIN 51524 part 1). Mineral oil based hydraulic fluids HLP (DIN 51524 part 2). For use of environmentally acceptable fluids (vegetable or polyglycol base) please consult us.
Fluid Temperature	°C (°F)	–20....+80 (-4....+176) (NBR)
Permissible degree of fluid contamination		ISO 4572: $\beta_x \geq 75$ X=12...15 ISO 4406: class 20/18/15 NAS 1638: class 9
Viscosity range	mm^2/s	5....420

Note

For applications with different specifications consult us

Ordering details

01	02	03	04	05		06	
L	**88**	**50**			**00**	**0**	**0**

Family

01	Directional Valve elements ED	**L**

Model

02	Flangeable element secondary valves	**88**

Type

03	One-way flow control	**50**

Configuration

04	Flow control “meter out” for both A and B ports	**01AB**
	Flow control “meter out” for port A only	**010A**
	Flow control “meter out” for port B only	**010B**
	Flow control “meter in” for both A and B ports	**02AB**
	Flow control “meter in” for port A only	**020A**
	Flow control “meter in” for port B only	**020B**

Flow Adjustment

05	Flow control cartridge with adjuster screw	**2S**
	Flow control cartridge with hand-knob	**2K**

Ports

06	G 3/8 DIN 3852	**0**

Symbols

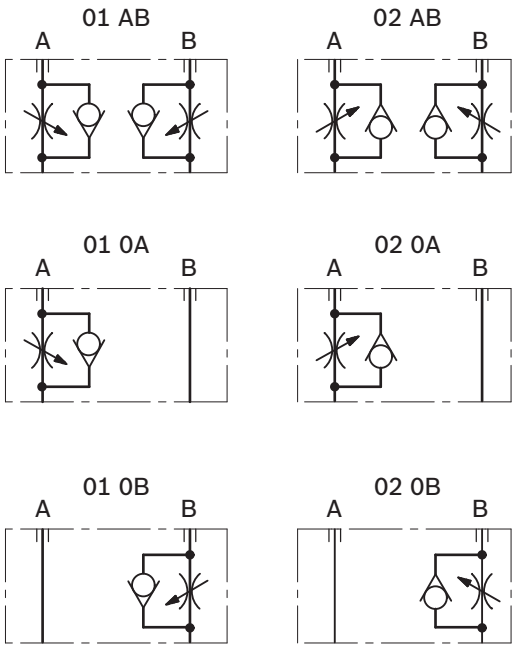

Characteristic curves

Controlled flow vs. available pressure drop, at different opening turns of adjuster screw

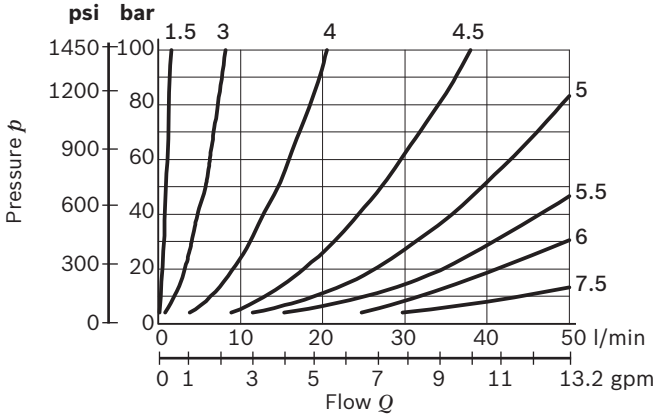

Δp curve vs. free flow, through the check valve

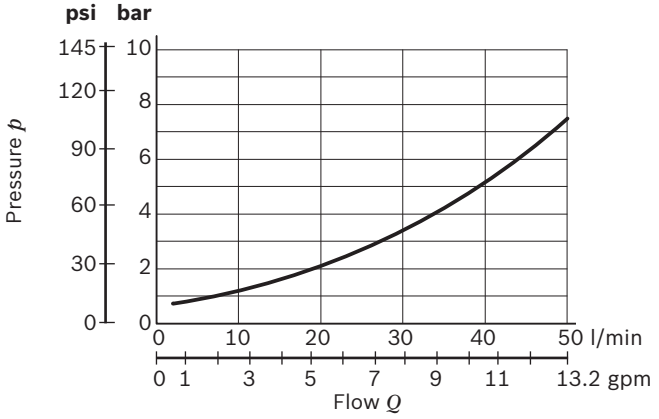

Measured with hydraulic fluid ISO-VG32 at 45° ±5 °C (113° ±9 °F); ambient temperature 20 °C (68 °F).

2

External dimensions and fittings

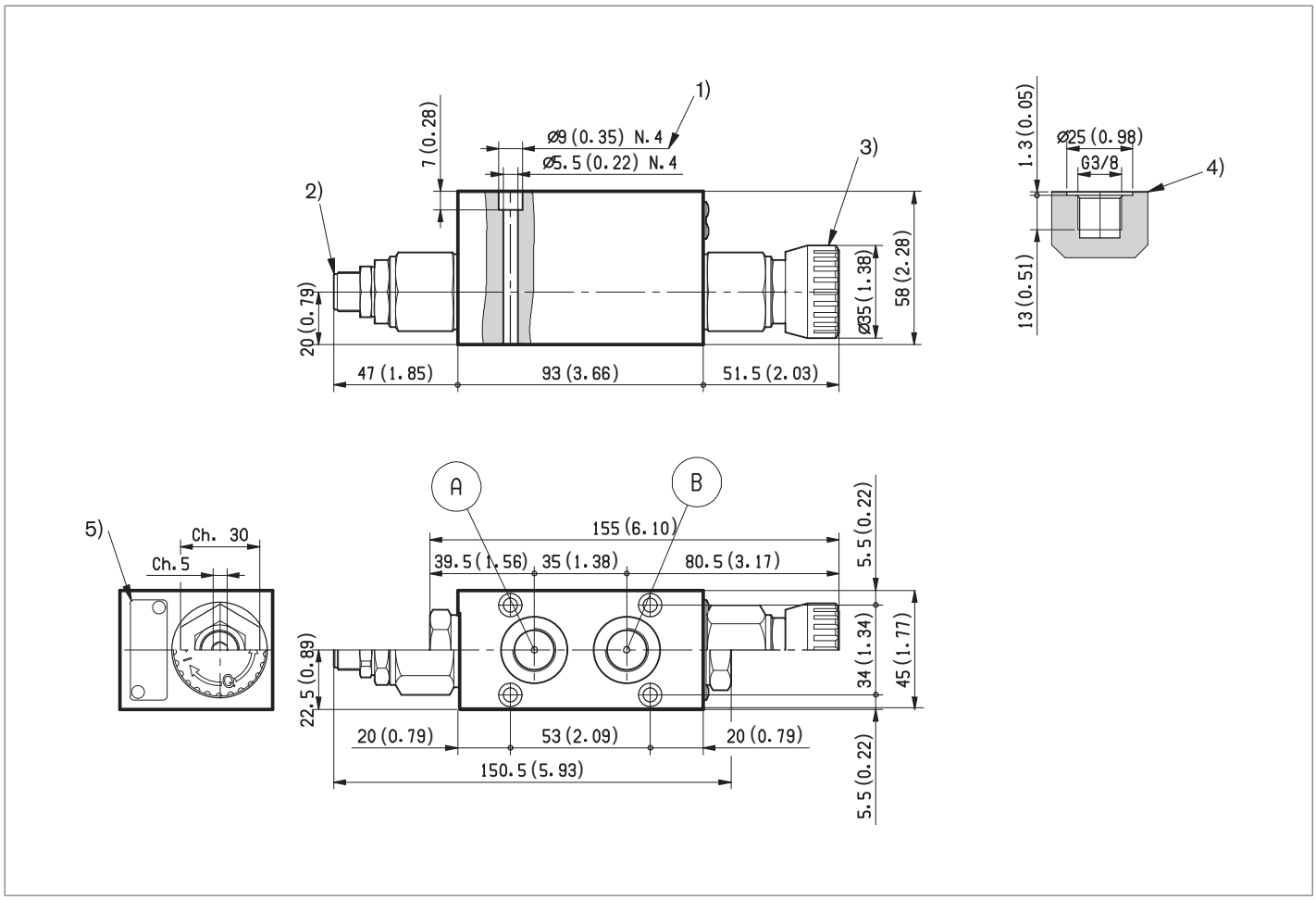

1 Four through holes Ø 5.5 mm (0.217 inch) for screws and tightening torques see data sheet RE 18301-90.
2 Unidirectional flow restrictor with adjuster screw
3 Unidirectional flow restrictor with hand-knob.
4 Ports for the actuator
5 Identification label

Flangeable elements with Cross Piloted Counterbalance Valves

EDM-VB

Description

The secondary flangeable elements EDM-VB-__ can be interfaced and bolted on top of the A and B ports of the ED elements of the Directional Valve Assembly.
They incorporate one or two Cross Piloted Counterbalance Valves which allow free flow toward the A and B outlet ports, and lock in a leak free mode the flow returning from the actuator. Pilot pressure in the opposite line reduces the pressure setting of the counterbalance valve in proportion to the pilot ratio (4:1) until opening and allowing the flow return from the actuator.
The pressure setting should be at least 1,3 times the highest expected load.
Depending on the version selected (02AB, 020A or 020B), the counterbalance function can be double-acting or single-acting, upstream or downstream, in both A and B ports, or in A port only, or in B port only (see hydraulic symbols).
The body of the EDM-VB elements is made of Black Anodized Aluminium. Hydraulic Ports A and B are size G 3/8.

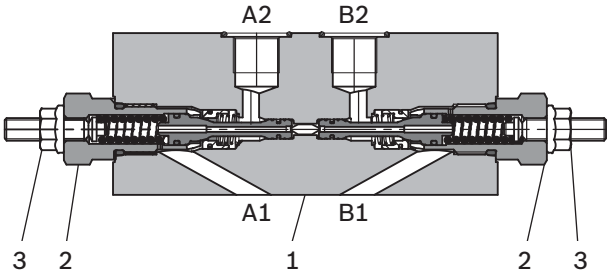

Technical data

General		
Weight of manifold, with two counterbalance valves EDM-VB-AB	kg (lbs)	1.2 (2.65)
Weight of manifold, with one counterbalance valve EDM-VB-0A	kg (lbs)	1.02 (2.24)
Ambient Temperature	°C (°F)	–20....+50 (-4....+122) (NBR seals)
Hydraulic		
Maximum pressure	bar (psi)	250 (3625)
Maximum flow	l/min (gpm)	40 (10.5)
Hydraulic fluid General properties: it must have physical lubricating and chemical properties suitable for use in hydraulic systems such as, for example:		Mineral oil based hydraulic fluids HL (DIN 51524 part 1). Mineral oil based hydraulic fluids HLP (DIN 51524 part 2). For use of environmentally acceptable fluids (vegetable or polyglycol base) please consult us.
Fluid Temperature	°C (°F)	–20....+80 (-4....+176) (NBR)
Permissible degree of fluid contamination		ISO 4572: $\beta_x \geq 75$ X=10...12 ISO 4406: class 19/17/14 NAS 1638: class 8
Viscosity range	mm^2/s	5....420

Note
For applications with different specifications consult us

Ordering details

01	02	03	04	05		06	
L	**88**	**35**		**35**	**00**		**0**

Family

01	Directional Valve elements ED	**L**

Model

02	Flangeable element secondary valves	**88**

Type

03	Cross Piloted Counterbalance Valves	**35**

Configuration

04	Counterbalance Valves for both A and B ports	**02AB**
	Counterbalance Valve for port A only	**020A**
	Counterbalance Valve for port B only	**020B**[3]

Counterbalance pressure range [1]

05	100-250bar (1440-3626 psi)	**35**

Ports

06	G 3/8 DIN 3852	**0**
	9/16-18 UNF 2-B (SAE 6)	**1** [2]

1) Configuration 02AB with fixed spring setting (160 bar (2300 psi) or 210 bar (3000 psi) or 250 bar (3600 psi)) available on request.
2) Available only for configuration 02AB
3) The version "020B" is similar to "020A" by rotating the block of 180°.

Symbols

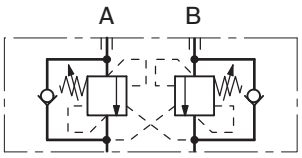

02 AB

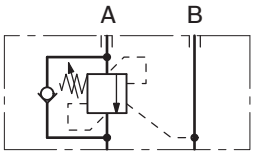

02 0A
02 0B

Characteristic curves

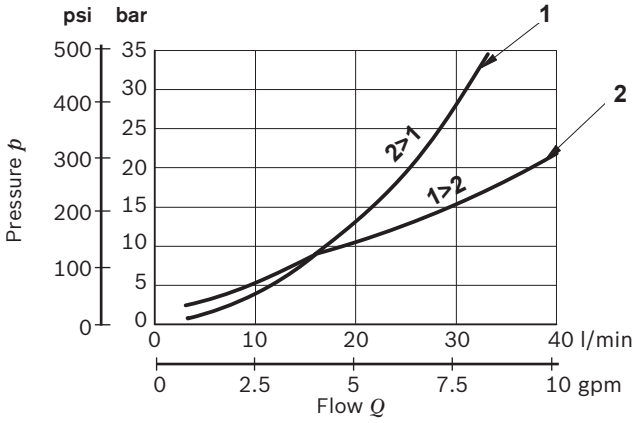

Pressure drop	Curve no.
Fully piloted	1
Through check valve	2

Measured with hydraulic fluid ISO-VG32 at 45° ±5 °C (113° ±9 °F); ambient temperature 20 °C (68 °F).

Dimensions [mm (inches)]

External dimensions and fittings

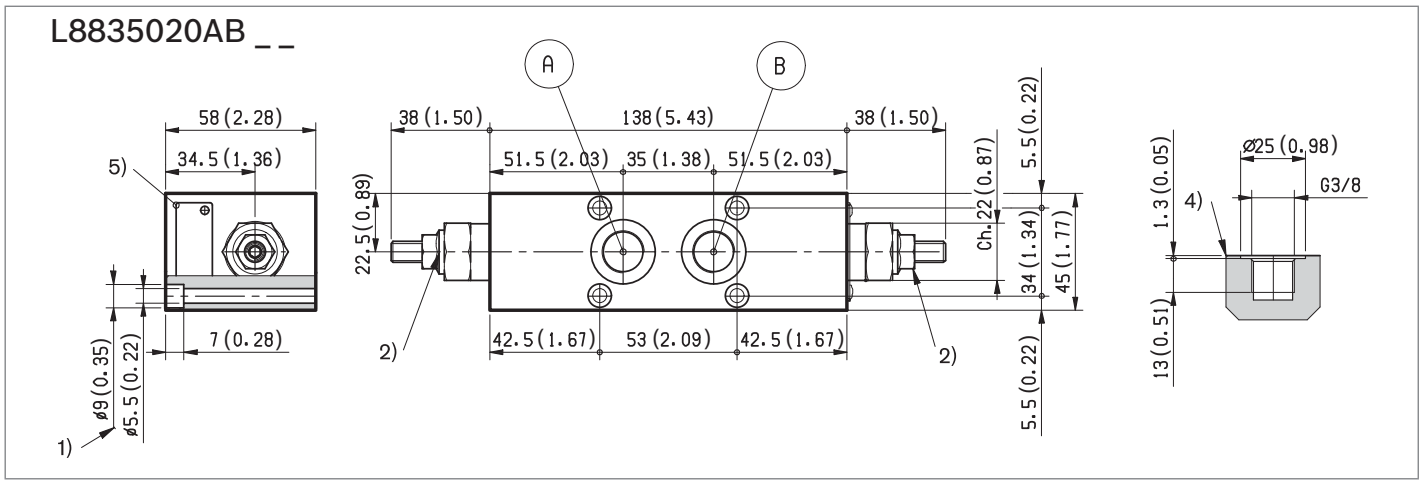

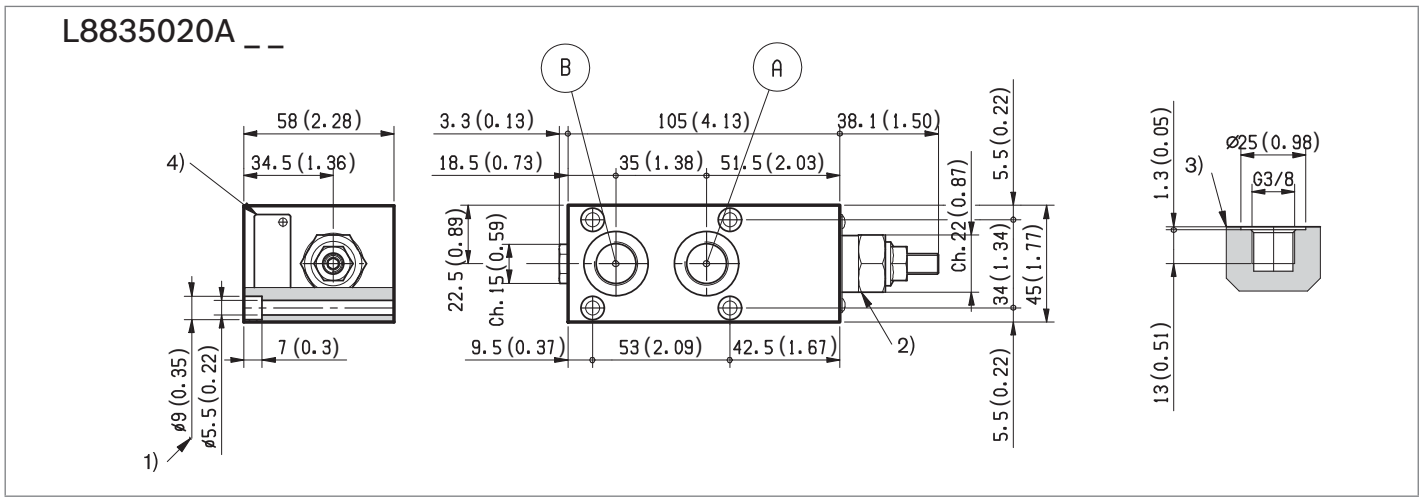

1 Four through holes Ø 5.5 mm (0.217 inch) for screws and tightening torques see data sheet RE 18301-90.
2 Counterbalance valve with screw type adjustment.
3 A1 and B1 ports for the actuator.
4 Identification label.

Flangeable elements with 2/2 solenoid cartridges valves

EDM-VEI

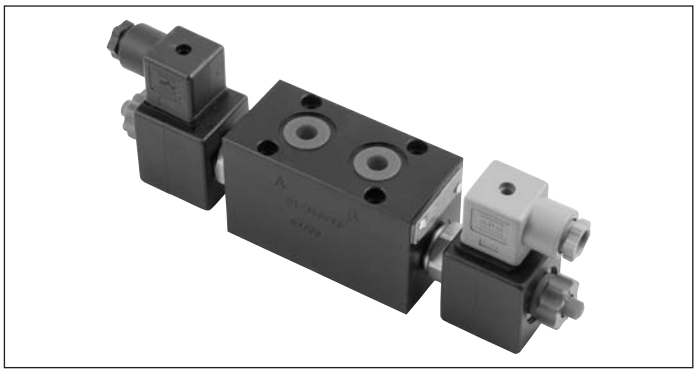

Description

The secondary flangeable elements EDM-VEI-__ can be interfaced and bolted on top of the A and B ports of the ED elements of the Directional Valve Assembly.
They incorporate one or two solenoid operated cartridges (VEI), and they can create a variety of hydraulic circuits, depending on the cartridges fitted.
The body of the EDM-VEI elements is made of Black Anodized Aluminium. Hydraulic Ports A2 and B2 are size G 3/8.

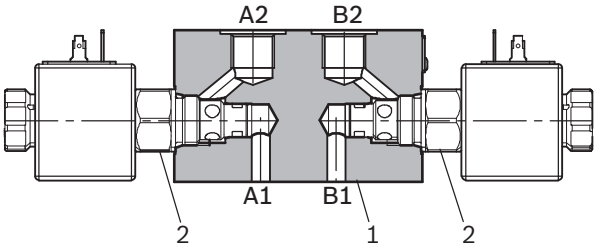

Technical data

General		
Weight of manifold only, without solenoid cartridge	kg (lbs)	0.60 (1.32)
Weight with one solenoid cartridge	kg (lbs)	0.95 (2.10)
Weight with two solenoid cartridges	kg (lbs)	1.22 (2.68)
Ambient Temperature	°C (°F)	–20....+50 (-4....+122) (NBR seals)
Hydraulic		
Maximum pressure	bar (psi)	250 (3625)
Maximum flow	l/min (gpm)	40 (10.5)
Hydraulic fluid General properties: it must have physical lubricating and chemical properties suitable for use in hydraulic systems such as, for example:		Mineral oil based hydraulic fluids HL (DIN 51524 part 1). Mineral oil based hydraulic fluids HLP (DIN 51524 part 2). For use of environmentally acceptable fluids (vegetable or polyglycol base) please consult us.
Fluid Temperature	°C (°F)	–20....+80 (-4....+176) (NBR)
Permissible degree of fluid contamination		ISO 4572: $\beta_x \geq 75$ X=10...12 ISO 4406: class 19/17/14 NAS 1638: class 8
Viscosity range	mm^2/s	5....420

Note

For applications with different specifications consult us

Ordering details

01	02	03	04	05	06	07	08	
L	**88**	**75**					**0**	**0**

Family

01	Directional Valve elements ED	**L**

Model

02	Flangeable element secondary valves	**88**

Type

03	In-line 2/2 solenoid cartridges valves	**75**

Cartridge model[1)]

04	VEI-8I-2T-06-NC	**01**
	VEI-8I-2A-06-NC	**02**

Configuration

05	Solenoid cartridges for both A and B ports	**AB**
	Solenoid cartridge for port A only	**0A**

Supply Voltage

06	12V DC	**OB**
	14V DC	**OG**
	24V DC	**OC**
	26V DC	**AC**

Electric Connector

07	With coils, without mating connector DIN EN 175301-803	**01**[2)]
	With coils, with bi-directional diode, without mating connector vertical Amp-Junior	**03**
	With coils, with bi-directional diode, without mating connector DT04-2P	**07**

Ports

08	G 3/8 DIN 3852	**0**

1) Other versions on request.
2) For connectors ordering code see data sheet RE 18325-90.

Symbols

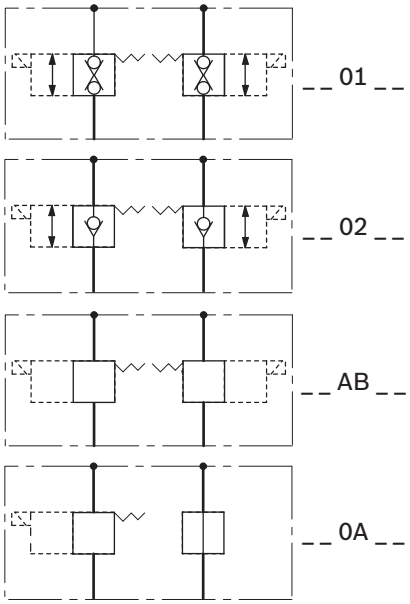

External dimensions and fittings

L8875 _ _ AB _ _

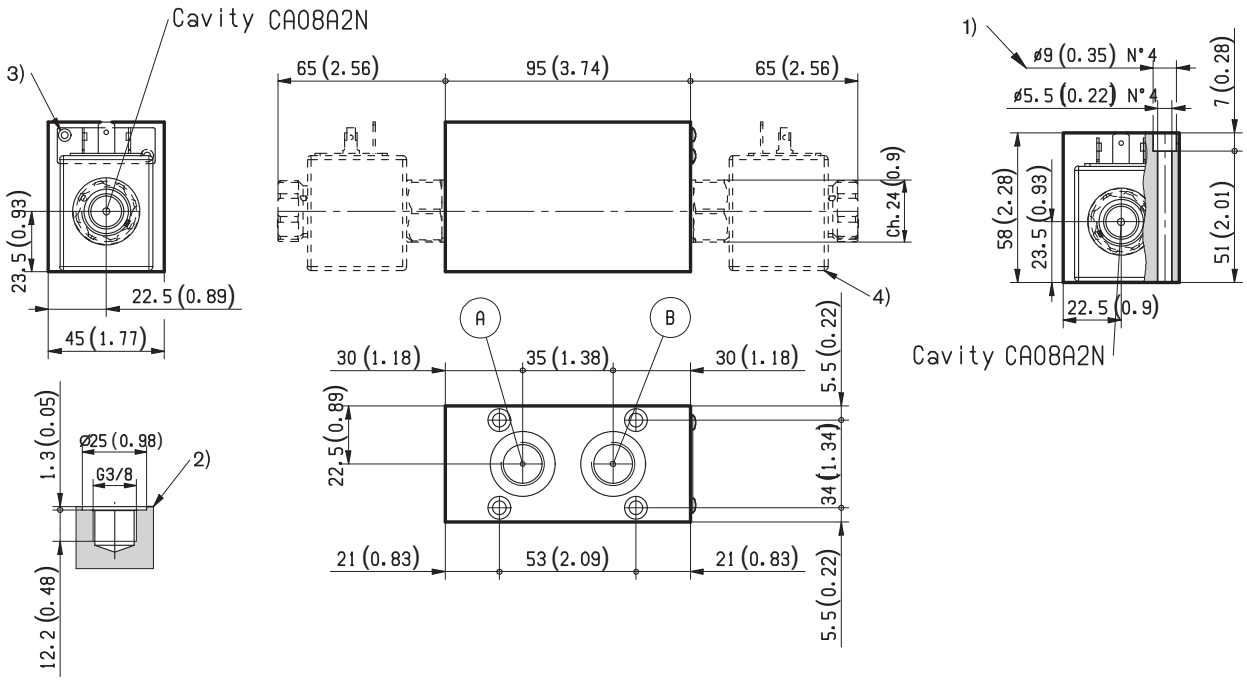

L8875 _ _ 0A _ _

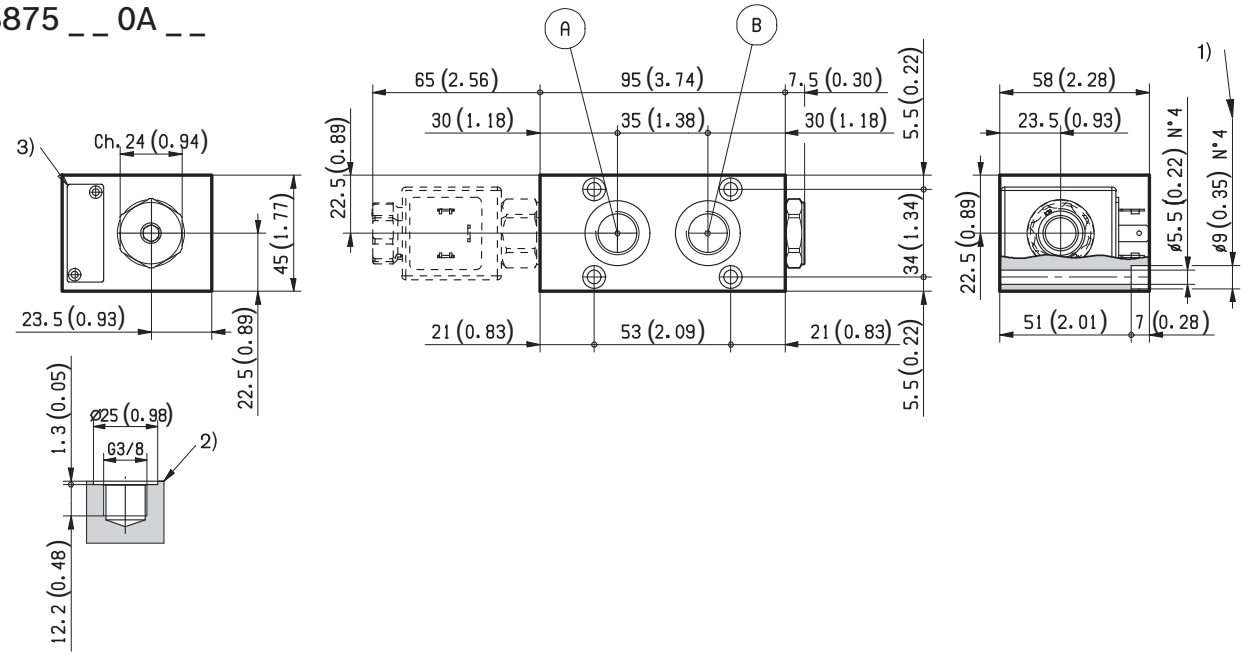

1 Four through holes Ø 5.5 mm (0.217 inch) for screws and tightening torques see data sheet RE 18301-90.
2 A and B ports G 3/8.
3 Identification label.
4 Cavity for solenoid cartridge VEI.

Flangeable elements with single or double secondary pressure relief valves and anti-cavitation function

EDCM/EDCMF-VM

Description

These modular secondary elements can be flange mounted on top of the EDC elements machined with the interfacing surface.

They let through free flow to the A (or B) port until pressure increases and reaches the selected pressure setting; then they release flow into the Tank channels.

The direct acting relief cartridges are designed for quick response and stable pressure control; they also incorporate a reverse flow check for anti-cavitation.

With a body made of zinc plated cast iron, these elements combine secondary pressure relief and dual cross-over, with anti-cavitation function.

Pressure relief valves and anti-cavitation function

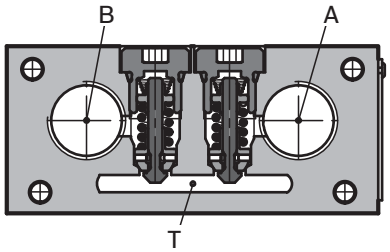

Only anti-cavitation function

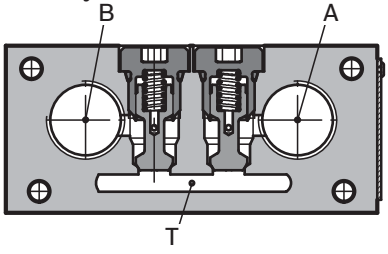

Technical data

General		
Weight	kg (lbs)	0.6 (1.3)
Ambient Temperature	°C (°F)	–20....+50 (-4....+122) (NBR seals)
Hydraulic		
Maximum pressure	bar (psi)	310 (4500)
Maximum flow	l/min (gpm)	30 (7.93)
Hydraulic fluid General properties: it must have physical lubricating and chemical properties suitable for use in hydraulic systems such as, for example:		Mineral oil based hydraulic fluids HL (DIN 51524 part 1). Mineral oil based hydraulic fluids HLP (DIN 51524 part 2). For use of environmentally acceptable fluids (vegetable or polyglycol base) please consult us.
Fluid Temperature	°C (°F)	–20....+80 (-4....+176) (NBR)
Permissible degree of fluid contamination		ISO 4572: $\beta_x \geq 75$ X=10...12 ISO 4406: class 19/17/14 NAS 1638: class 8
Viscosity range	mm^2/s	5....420

Note

For applications with different specifications consult us

RF 1080 - 45/02 2016, Bosch Rexroth AG

Ordering details

01	02	03	04	05	06		07	
L	**85**	**65**				**00**		**0**

Family

01	Directional Valve	**L**

Model

02	Flangeable element for EDC valves	**85**

Type

03	Flangeable elements with secondary pressure relief valves and anti-cavitation function	**65**

Configuration

04	Cavity for cartridge for both A and B ports	**01AB**
	Cavity for cartridge for port A only	**010A**
	Cavity for cartridge for port B only	**010B**

Cartridge for A side

05	Relief valve setting A side Q = 5 l/min (1.3gpm) Ex. Setting at 5 l/min 20 bar (see table below)	**A...X**
	Check valve (on A side)	**9**

Cartridge for B side

06	Relief valve setting A side Q = 5 l/min (1.3gpm) Ex. Setting at 5 l/min 20 bar (see table below)	**A...X**
	Check valve (on B side)	**9**

Ports

07	G 3/8 DIN 3852	**0**
	G 1/2 DIN 3852	**2**
	3/4” - 16 UNF - SAE8	**3**
	Machined for interfacing to modular elements	**M**

A	B	C	D	E	F	G	H	I	J	K	L
20 bar	30 bar	40 bar	50 bar	60 bar	70 bar	80 bar	90 bar	100 bar	110 bar	120 bar	130 bar
290 psi	435 psi	580 psi	725 psi	870 psi	1015 psi	1160 psi	1305 psi	1450 psi	1595 psi	1740 psi	1885 psi

M	N	O	P	Q	R	S	T	U	V	W	X
140 bar	150 bar	160 bar	170 bar	180 bar	190 bar	200 bar	210 bar	220 bar	230 bar	240 bar	250 bar
2030 psi	2175 psi	2320 psi	2465 psi	2611 psi	2756 psi	2901 psi	3046 psi	3191 psi	3336 psi	3481 psi	3626 psi

Symbols

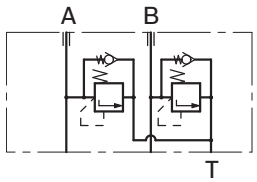

AB_ _

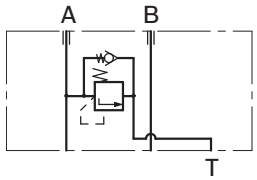

0A_ 0

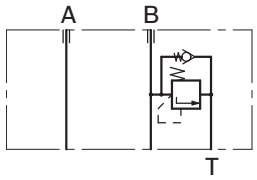

0B0 _

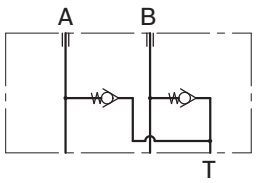

AB99

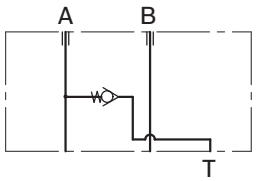

0A90

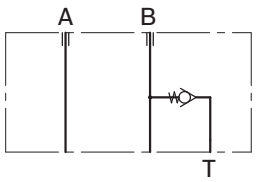

0B09

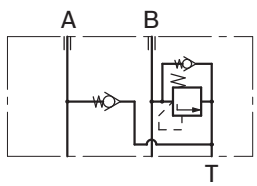

AB9_

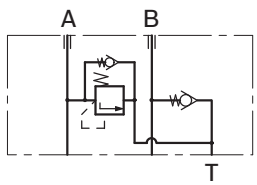

AB_9

Characteristic curves

Pressure relieving

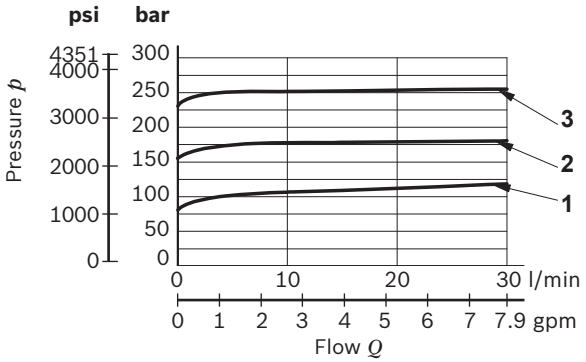

Example	Curve no.
Example of setting 100 bar - 5l/min (1450psi - 1.32gpm)	1
Example of setting 150 bar - 5l/min (2175psi - 1.32gpm)	2
Example of setting 250 bar - 5l/min (3626psi - 1.32gpm)	3

Pressure drop (anticavitation)

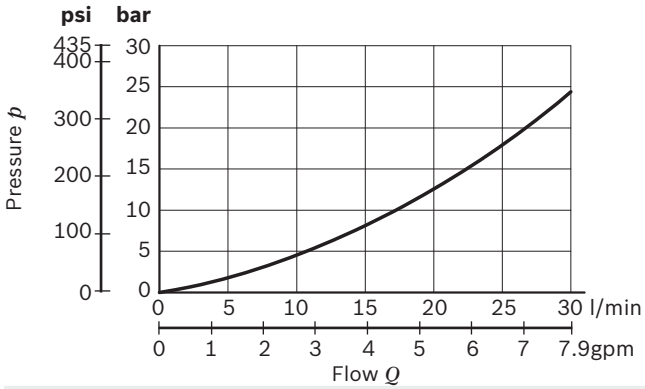

Pressure drop misured with EDC valve L8580_2S9000000M000

Measured with hydraulic fluid ISO-VG32 at 45° ±5 °C (113° ±9 °F); ambient temperature 20 °C (68 °F).

2

RF 1080 - 45/02 2016 Bosch Rexroth AG

717

External dimensions and fittings

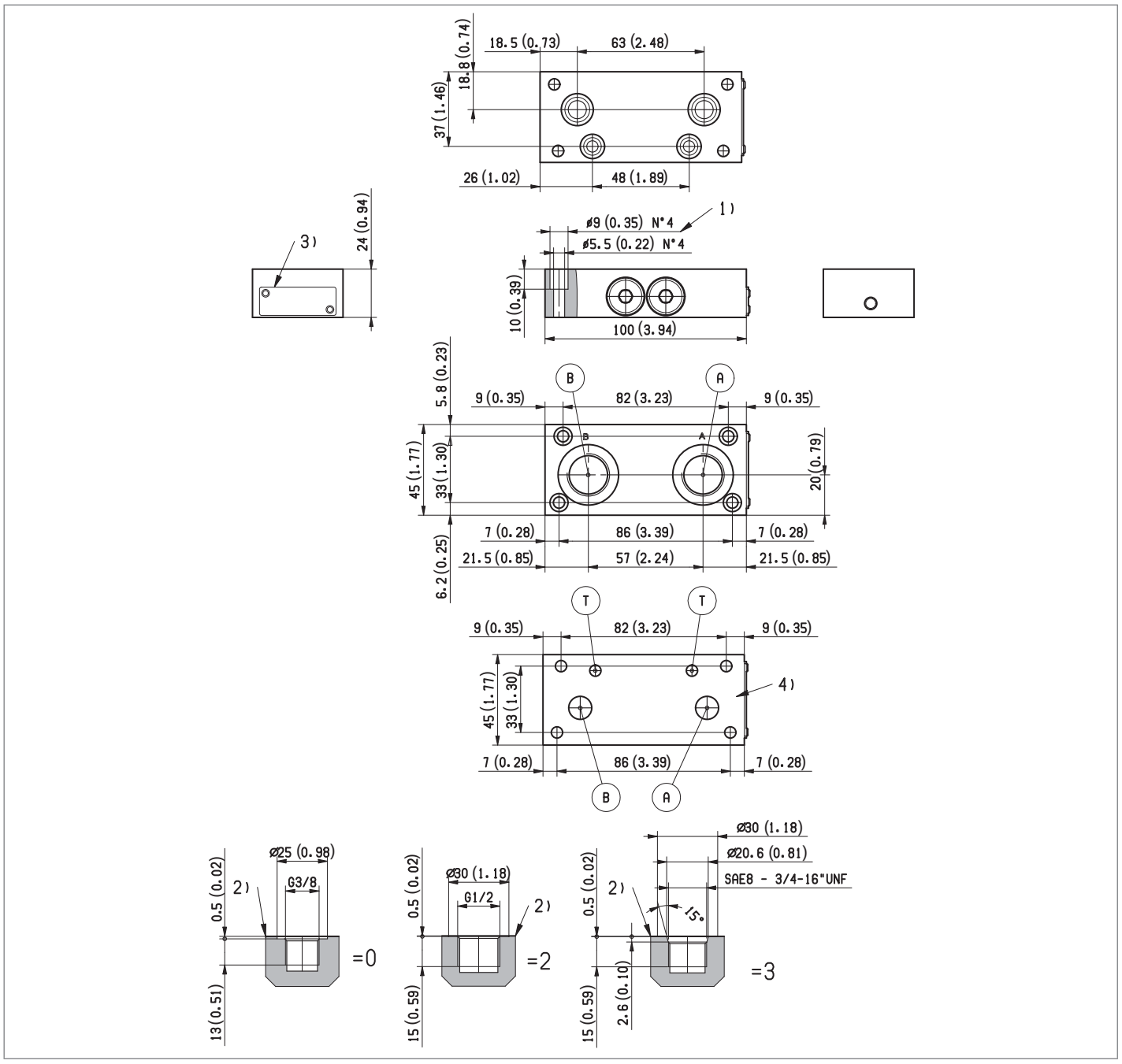

1 Four through holes 5.5mm (0.217 inch) for screws and tightening torques see data sheet RE 18301-90.
2 A and B ports.
3 Identification label.
4 Machined for interfacing to modular elements (=M ports version).

Flangeable elements with single or double acting Cross Piloted Check Valves

EDCM/EDCMF-VR

Description

These secondary flangeable elements can be interfaced and bolted on top of the A and B ports of the ED elements of the directional valve assembly.

They incorporate two cross piloted check valve which allow free flow toward the A and B outlet ports, and lock in a leak free mode the flow returning from the actuator, until sufficient pilot pressure is built up in the opposite line and the check valve in opened.

Depending on the version selected (AB, or 0A, or 0B), the PO check valve is in both A and B ports, or in A port only, or in B port only (see hydraulic symbols).

The pilot ratio in 3:1, consequently, the pilot pressure needs to be at least 1/3, or 33% of the load induced pressure in the actuator before Check Valve opens, and oil can return to tank.

The body of these elements in made of Yellow Zinc Plated (Cr+3) Cast Iron (CI). Hydraulic Ports A2 and B2 are size G3/8 or G1/2 or ¾-16 UNF 2-B (SAE8).

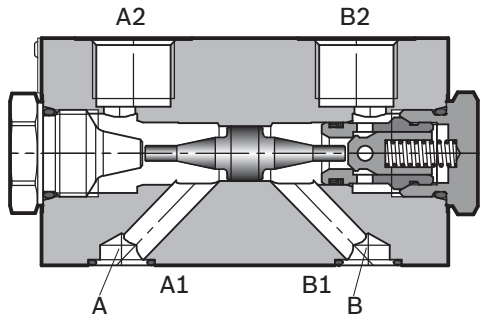

Technical data

General		
Weight (AB, 0A, 0B version)	kg (lbs)	2.0 (4.4)
Ambient Temperature	°C (°F)	–20....+50 (-4....+122) (NBR seals)
Hydraulic		
Maximum pressure	bar (psi)	310 (4500)
Maximum flow	l/min (gpm)	70 (18.5)
Hydraulic fluid General properties: it must have physical lubricating and chemical properties suitable for use in hydraulic systems such as, for example:		Mineral oil based hydraulic fluids HL (DIN 51524 part 1). Mineral oil based hydraulic fluids HLP (DIN 51524 part 2). For use of environmentally acceptable fluids (vegetable or polyglycol base) please consult us.
Fluid Temperature	°C (°F)	–20....+80 (-4....+176) (NBR)
Permissible degree of fluid contamination		ISO 4572: $\beta_x \geq 75$ X=10...12 ISO 4406: class 19/17/14 NAS 1638: class 8
Viscosity range	mm^2/s	5....420

Note

For applications with different specifications consult us

Ordering details

01	02	03	04	05		06	07
L	**85**	**41**			**00**		**0**

Family

01	Directional Valve	**L**

Model

02	Flangeable element for EDC valves	**85**

Type

03	Cross Piloted Check Valves	**41**

Configuration

04	Check Valves for both A and B ports	**00AB**
	Check Valve for port A only	**000A**
	Check Valve for port B only	**000B**

Cracking Pressure

05	0.5 bar (7.3 psi)	**01**
	5 bar (72,5 psi)	**05**[1]

Ports

06	G 3/8 DIN 3852	**0**
	G 1/2 DIN 3852	**2**
	3/4” - 16 UNF - SAE8	**3**
	Machined for interfacing to modular elements	**M**

Additional fixtures

07	Standard	**0**

1) Recommended version for EDC-P (RE18301-09)

Symbols

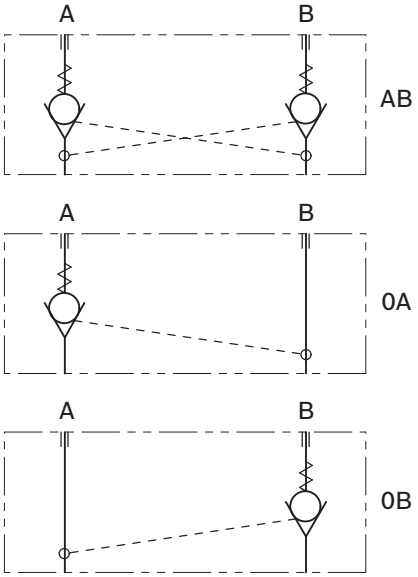

Characteristic curves

Pressure relieving

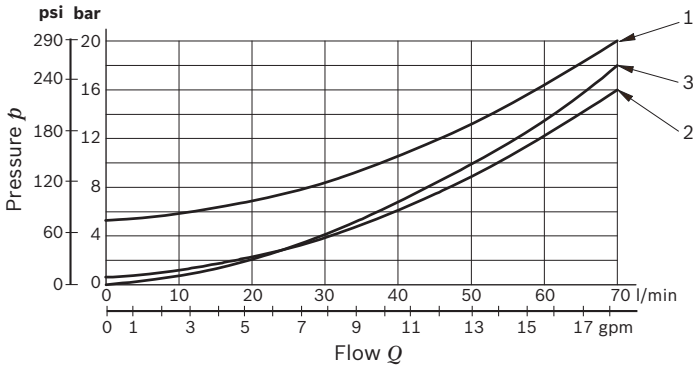

Cracking pressure	Curve no.
5 bar (72,5 psi) free flow either A1 > A2 or B1 > B2	1
0.5 bar (7.3 psi) free flow either A1 > A2 or B1 > B2	2
Returning flow, fully piloted, either A2 > A1 or B2 > B1	3

Measured with hydraulic fluid ISO-VG32 at 45° ±5 °C (113° ±9 °F); ambient temperature 20 °C (68 °F).

2

Dimensions [mm (inches)]

External dimensions and fittings

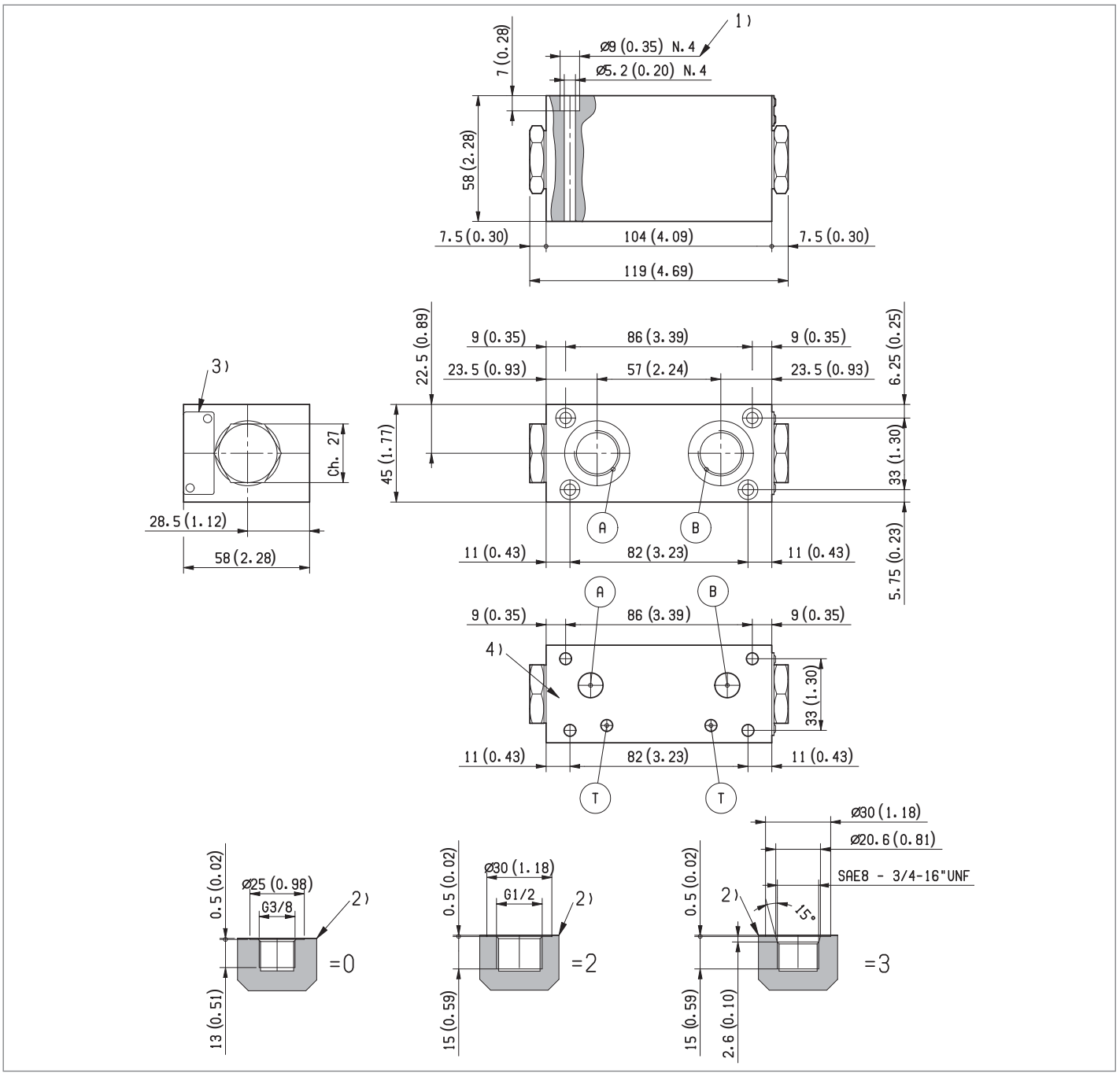

1 Four through holes Ø 5.2 mm (0.205 inch) for screw and tightening torques see data sheet RE 18301-90.
2 A and B ports for the actuator.
3 Identification label.
4 Machined for interfacing to modular elements (=M ports version).

Flangeable elements with secondary pressure relief valves single or double

EDCM/EDCMF-VM5

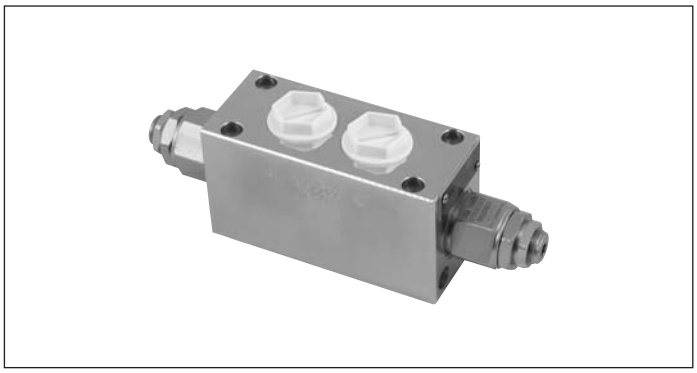

Description

These modular secondary elements can be flange mounted on top of the EDC elements machined with the interfacing surface.

They let through free flow to the A (or B) port until pressure increases and reaches the pressure setting; then they release flow into the Tank channels (T).

The maximum secondary pressure in line A, or B, can be adjusted through the adjuster screw (2).

The body (1) is made of Yellow Zinc Plated (Cr+3) Cast Iron (CI). Hydraulic Ports A2 and B2 are size G3/8 and G1/2; with the modular version (M) is possible to flange the others type of EDCM-modular-elements avaible..

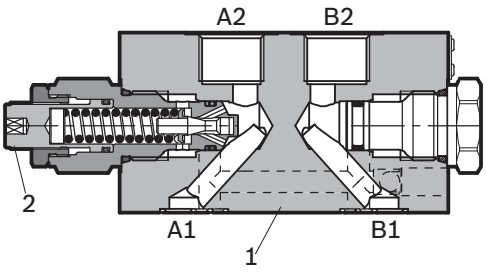

Technical data

General		
Weight	kg (lbs)	2.0 (4.4)
Ambient Temperature	°C (°F)	–20....+50 (-4....+122) (NBR seals)
Hydraulic		
Maximum pressure	bar (psi)	310 (4496)
Maximum flow	l/min (gpm)	50 (13.2)
Hydraulic fluid General properties: it must have physical lubricating and chemical properties suitable for use in hydraulic systems such as, for example:		Mineral oil based hydraulic fluids HL (DIN 51524 part 1). Mineral oil based hydraulic fluids HLP (DIN 51524 part 2). For use of environmentally acceptable fluids (vegetable or polyglycol base) please consult us.
Fluid Temperature	°C (°F)	–20....+80 (-4....+176) (NBR)
Permissible degree of fluid contamination		ISO 4572: $\beta_x \geq 75$ X=10...12 ISO 4406: class 19/17/14 NAS 1638: class 8
Viscosity range	mm^2/s	5....420

Note

For applications with different specifications consult us

Ordering details

01	02	03	04	05	06	07		08	
L	**85**	**61**					**0**		**0**

Family

01	Directional Valve	**L**

Model

02	Flangeable element for EDC valves	**85**

Type

03	Flangeable elements with secondary pressure relief valves single or double	**61**

Configuration

04	Pressure relief for both A and B ports	**05AB**
	Pressure relief for port A only	**050A**
	Pressure relief for port B only	**050B**

Pressare adjustment

05	Relief cartridge with adjuster screw	**S**

Pressure range on port A

06	Not present	**0**
	25-120 bar (360-1740 psi)	**N**
	40-200 bar (580-2900 psi)	**B**
	150-350 bar (2175-5075 psi)	**V**

Pressure range on port B

07	Not present	**0**
	25-120 bar (360-1740 psi)	**N**
	40-200 bar (580-2900 psi)	**B**
	150-350 bar (2175-5075 psi)	**V**

Ports

08	G 3/8 DIN 3852	**0**
	G 1/2 DIN 3852	**2**
	Machined for interfacing to modular elements	**M**

Symbols

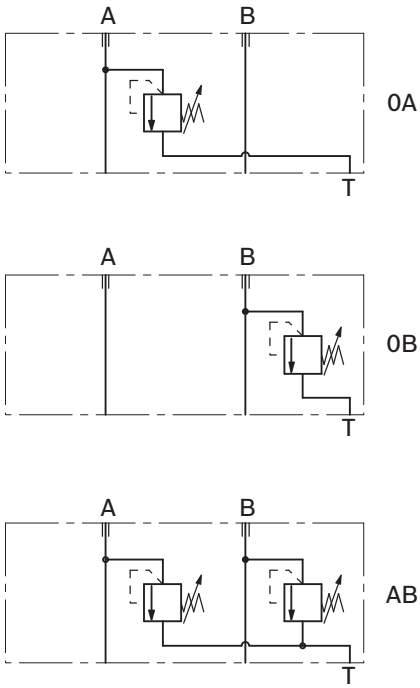

Characteristic curves

Pressure relieving

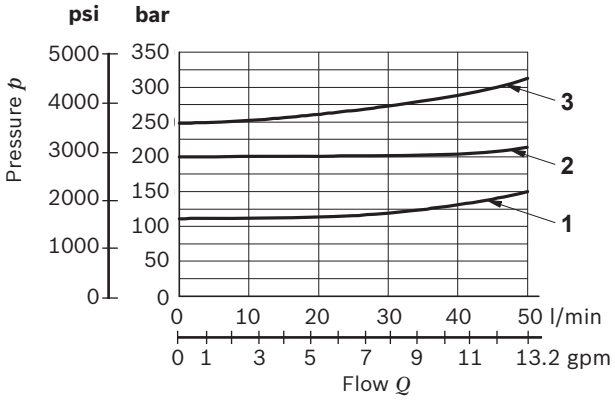

Pressure drop of the modular element alone

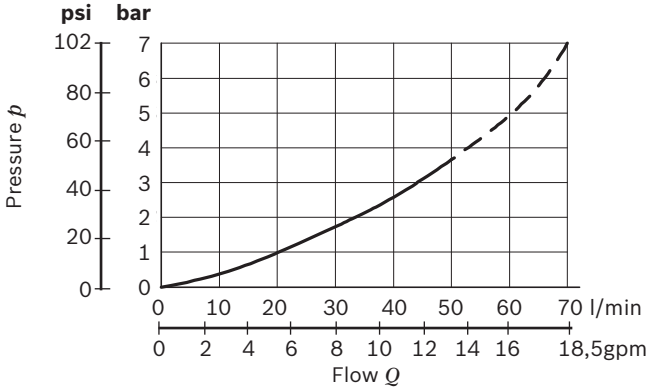

Cracking pressure	Curve no.
VMD1040SN setted at 120bar at 5l/min (1740 psi)	1
VMD1040SB setted at 200bar at 5l/min (2900 psi)	2
VMD1040SV setted at 250bar at 5l/min (3625 psi)	3

Measured with hydraulic fluid ISO-VG32 at 45° ±5 °C (113° ±9 °F); ambient temperature 20 °C (68 °F).

Dimensions [mm (inches)]

External dimensions and fittings

L85_ _ AB version

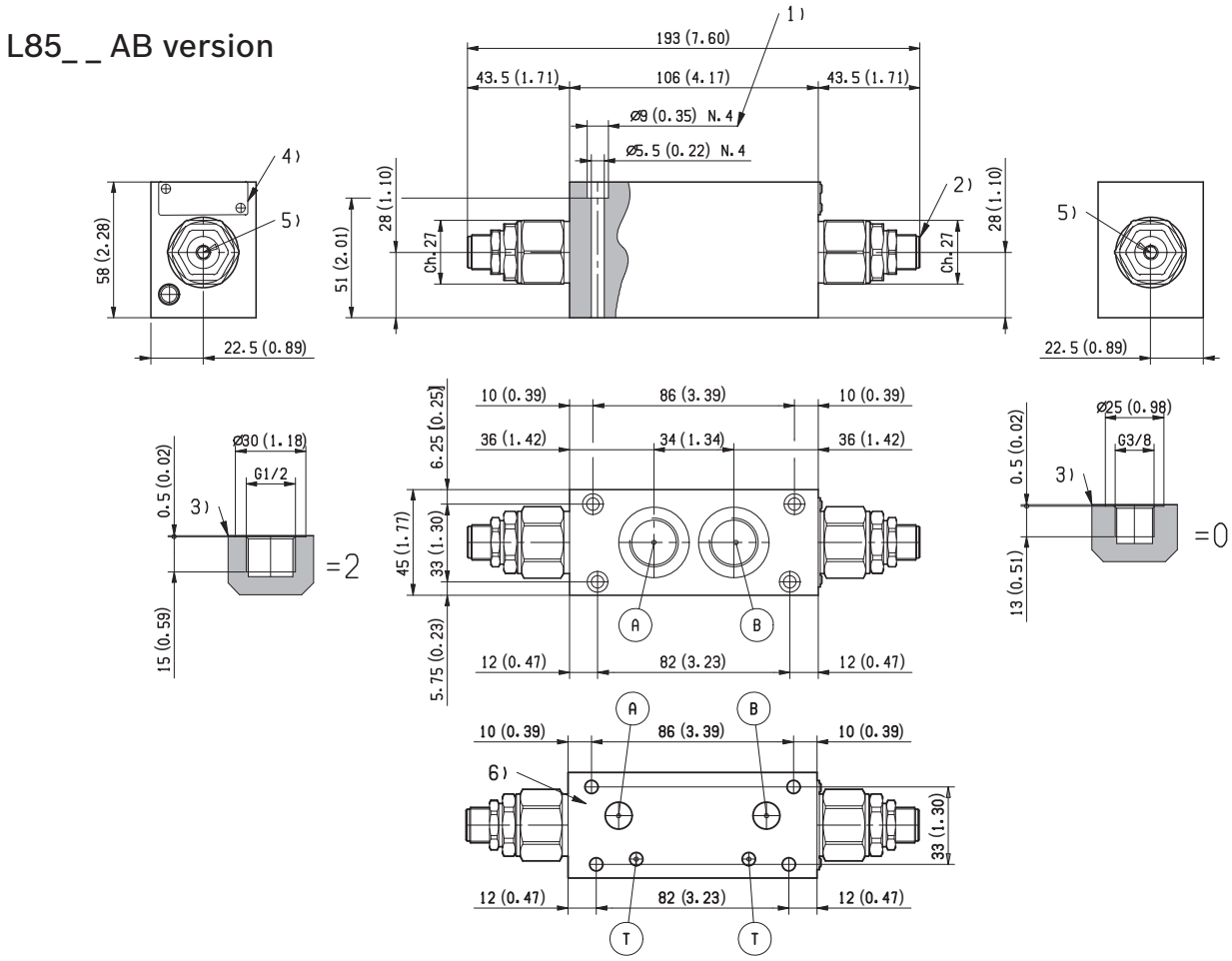

L85_ _ 0A version

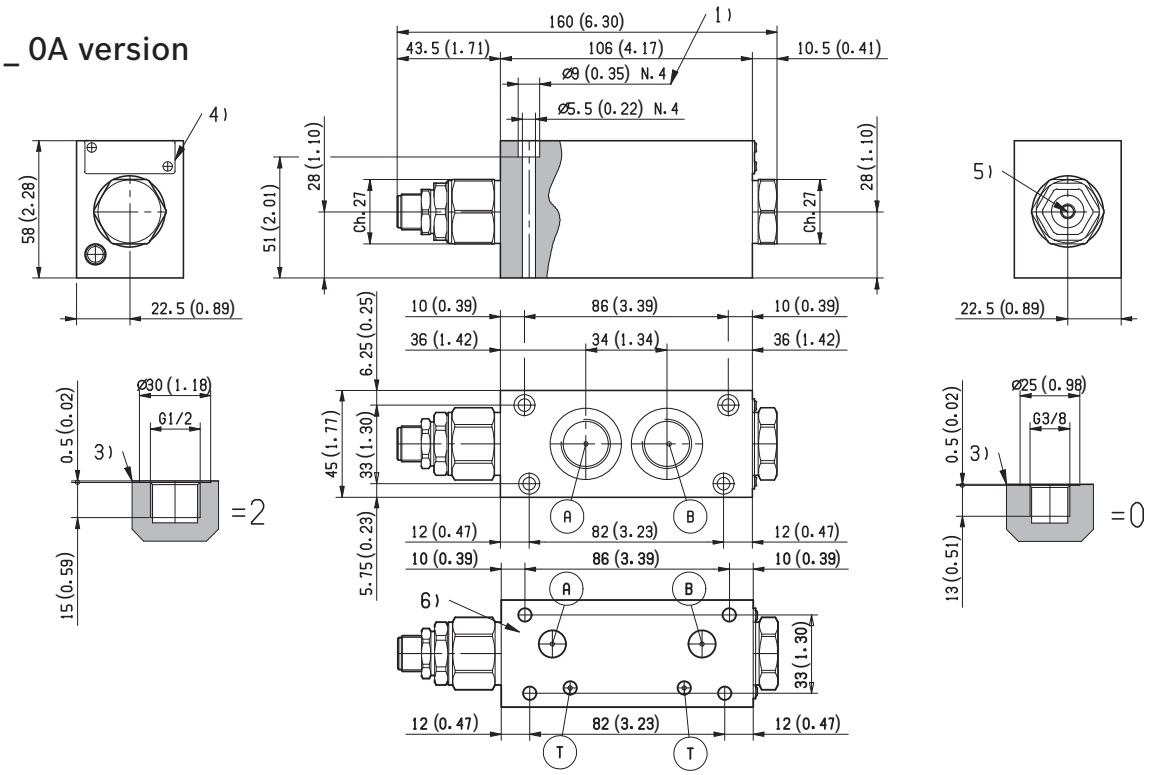

L85_ _ 0B version

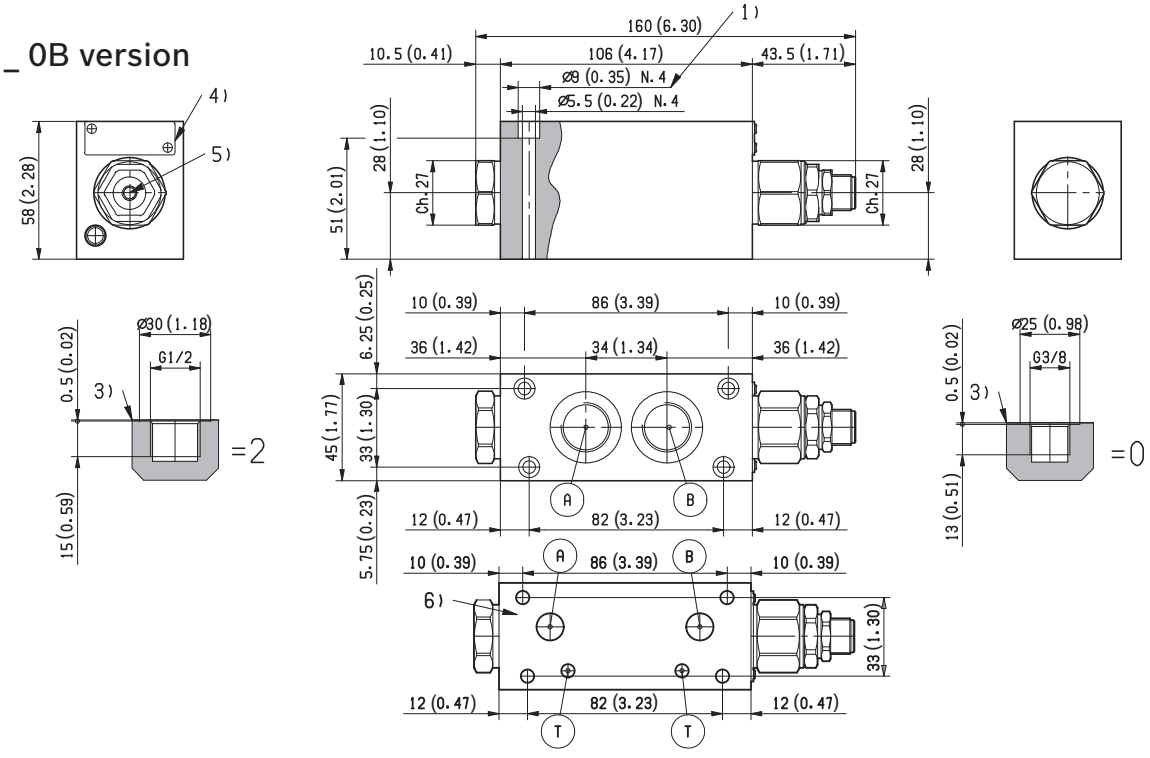

1 Four through holes Ø 5.5 mm (0.216 inch) for screws and tightening torques see data sheet RE 18301-90.
2 Pressure relief cartridge with adjuster screw VMD1040 refer to RE 18301-91.
3 A and B ports for the actuator.
4 Identification label.
5 Adjuster screw.: 5mm (0.2 inch).
6 Machined for interfacing to modular elements (=M ports version).

Modular directional valves
Outlet elements

Designation	Description	Ports/Size	Code	Data sheet	Page
Outlet elements basic	TC-00	Size 6	TC-00_	18301-60	731
Outlet elements with additional tank port T1	TC-01	G 3/8, G 1/2 / SAE 6	TC-01_	18301-61	735
Outlet elements with additional inlet port P1	TC-02	G 3/8, G 1/2 / SAE 6	TC-02_	18301-62	739
Outlet elements with additional inlet port P1 and tank port T1	TC-03	G 3/8, G 1/2 / SAE 6	TC-03_	18301-63	743
Outlet elements with pressure relief valve and with P, T and M ports for downstream operators	TC-04	G 3/8 / Size 6	TC-04_	18301-64	747

End Elements basic

TC-00-__-

Description

The outlet elements TC-00-__ are available in two versions:
- Body made of Black Anodized Aluminium (Al).
- Body made of Yellow Zinc plated (Cr+3) Cast Iron (CI).

They are employed as end plates to plug the P and T channels of the ED elements of the Directional Valve Assembly, when there are no downstream operators.

Technical data

General		
Weight TC-00-..-AL element	kg (lbs)	0.16 (0.35)
Weight TC-00-..-CI element	kg (lbs)	0.44 (0.96)
Ambient Temperature	°C (°F)	–20....+50 (-4....+122) (NBR seals)
Hydraulic		
Maximum pressure for aluminium version (AL)	bar (psi)	250 (3625)
Maximum pressure for Cast Iron version (CI)	bar (psi)	310 (4500)
Hydraulic fluid General properties: it must have physical lubricating and chemical properties suitable for use in hydraulic systems such as, for example:		Mineral oil based hydraulic fluids HL (DIN 51524 part 1). Mineral oil based hydraulic fluids HLP (DIN 51524 part 2). For use of environmentally acceptable fluids (vegetable or polyglycol base) please consult us.
Fluid Temperature	°C (°F)	–20....+80 (-4....+176) (NBR)
Permissible degree of fluid contamination		ISO 4572: $\beta_x \geq 75$ X=12...15 ISO 4406: class 20/18/15 NAS 1638: class 9
Viscosity range	mm^2/s	5....420

Note

For applications with different specifications consult us

Ordering details

01		02						03
TC	**-**	**00**	**-**	**00**	**-**	**00**	**-**	

Family

01	Outlet Elements	**TC**

Configuration

02	Basic	**00**

Material

03	Aluminium	**AL**
	Cast iron	**CI**

Symbol

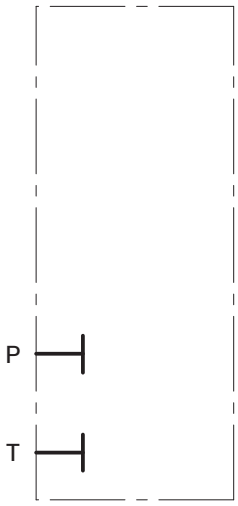

External dimensions and fittings

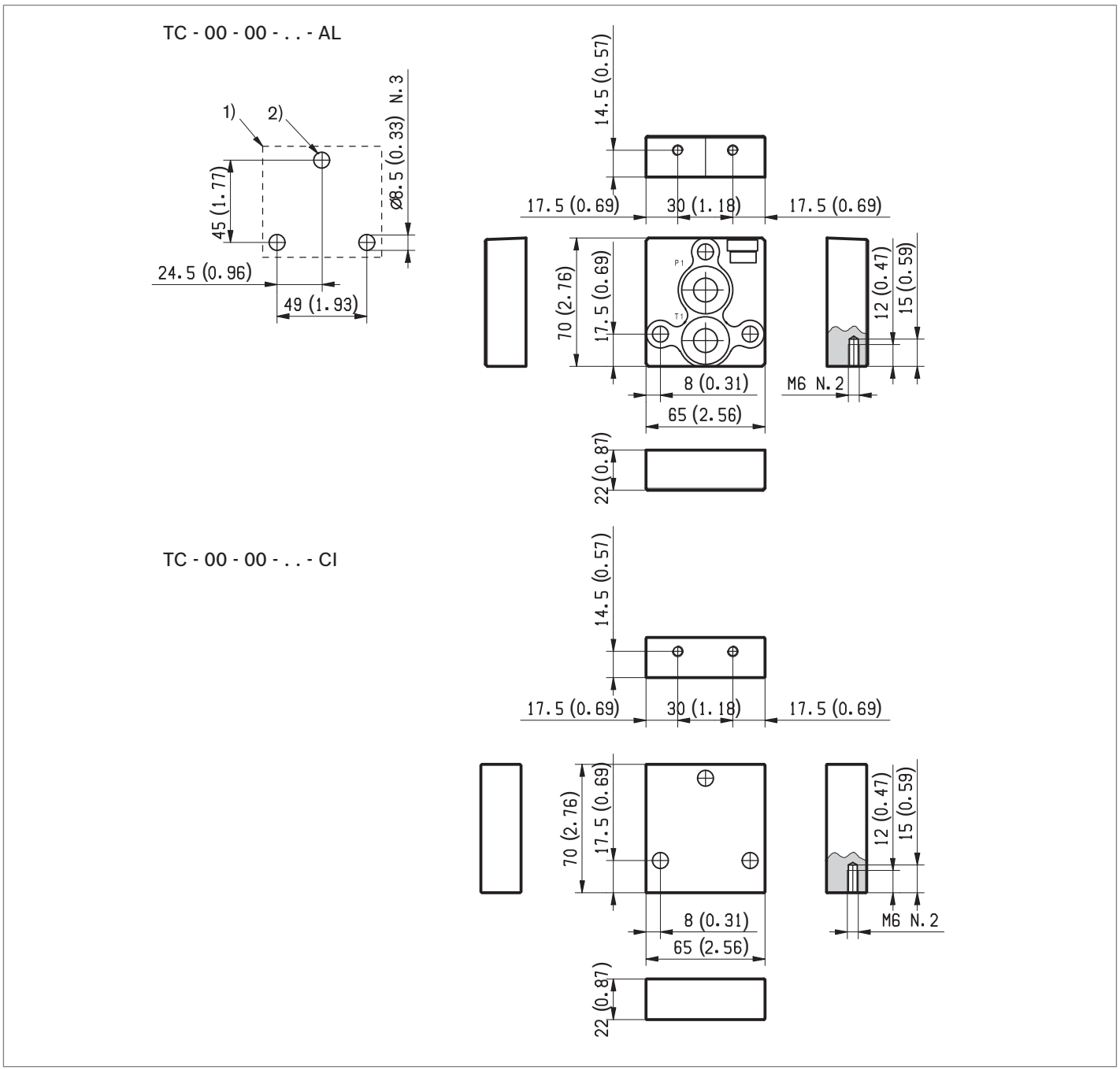

1 Flange specifications for coupling to the ED Directional Valve Elements.

2 For tie rod and tightening torque information see data sheet RE 18301-90.

Outlet Elements
additional tank port T1

TC-01-__-

Description

The outlet elements TC-01-__ are employed to connect the P and T channels of the ED elements of the Directional Valve Assembly, and to provide an extra tank port T1, either size G 3/8 or G 1/2.
The TC-01-__ elements are available with body made of Black Anodized Aluminium (Al).

Technical data

General		
Weight TC-01-02.. element	kg (lbs)	0.16 (0.35)
Weight TC-01-03.. element	kg (lbs)	0.26 (0.56)
Ambient Temperature	°C (°F)	–20....+50 (-4....+122) (NBR seals)
Hydraulic		
Maximum flow in T	l/min (gpm)	50 (13.2)
Maximum pressure	bar (psi)	250 (3625)
Hydraulic fluid General properties: it must have physical lubricating and chemical properties suitable for use in hydraulic systems such as, for example:		Mineral oil based hydraulic fluids HL (DIN 51524 part 1). Mineral oil based hydraulic fluids HLP (DIN 51524 part 2). For use of environmentally acceptable fluids (vegetable or polyglycol base) please consult us.
Fluid Temperature	°C (°F)	–20....+80 (-4....+176) (NBR)
Permissible degree of fluid contamination		ISO 4572: $\beta_x \geq 75$ X=12...15 ISO 4406: class 20/18/15 NAS 1638: class 9
Viscosity range	mm^2/s	5....420

Note
For applications with different specifications consult us

RF 1080 - 61/02 2016, Bosch Rexroth AG
735

Ordering details

01		02		03				04
TC	**-**	**01**	**-**		**-**	**00**	**-**	**AL**

Family

01	Outlet Elements	**TC**

Configuration

02	with additional tank port T1	**01**

Ports

03	G 3/8 DIN 3852	**02**
	G 1/2 DIN 3852	**03**

Material

04	Aluminium	**AL**

Symbol

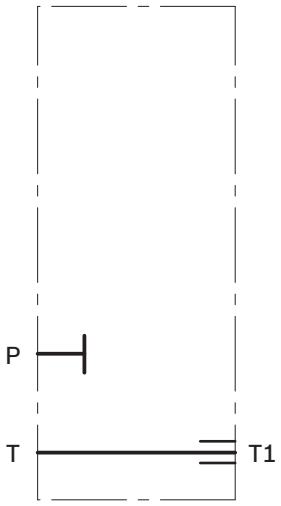

External dimensions and fittings

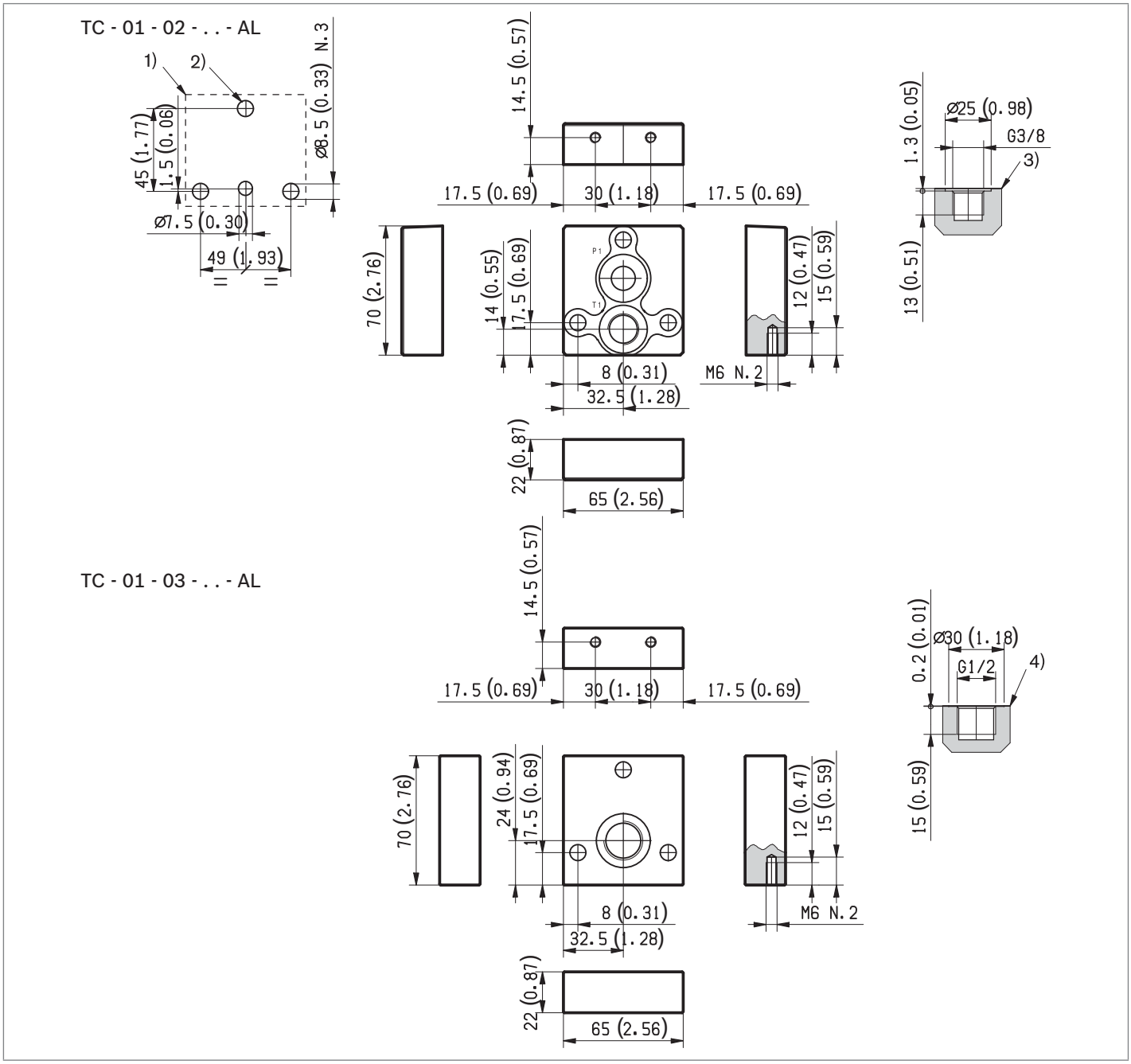

1 Flange specifications for coupling to the ED Directional Valve Elements.

2 For tie rod and tightening torque information see data sheet RE 18301-90.

3 Hydraulic Port T1 size G 3/8, for TC-01-02-...

4 Hydraulic Port T1 size G 1/2, for TC-01-03-...

Dimensions [mm (inches)]

Outlet Elements
with additional inlet port P1

TC-02-__-

Description

The outlet elements TC-01-__ are employed to connect the P and T channels of the ED elements of the Directional Valve Assembly, and to provide an extra inlet port P1, either size G 3/8 or G 1/2.

The outlet elements TC-01-__ are available in two versions:

- Body made of Black Anodized Aluminium (Al), or
- Body made of Yellow Zinc plated (Cr+3) Cast Iron (CI).

Technical data

General		
Weight TC-02-02-..-AL element	kg (lbs)	0.16 (0.35)
Weight TC-02-03-..-AL element	kg (lbs)	0.26 (0.56)
Weight TC-02-03-..-CI element	kg (lbs)	0.64 (1.41)
Ambient Temperature	°C (°F)	–20....+50 (-4....+122) (NBR seals)
Hydraulic		
Maximum flow in P	l/min (gpm)	50 (13.2)
Maximum pressure for aluminium version (AL)	bar (psi)	250 (3625)
Maximum pressure for Cast Iron version (CI)	bar (psi)	310 (4500)
Hydraulic fluid General properties: it must have physical lubricating and chemical properties suitable for use in hydraulic systems such as, for example:		Mineral oil based hydraulic fluids HL (DIN 51524 part 1). Mineral oil based hydraulic fluids HLP (DIN 51524 part 2). For use of environmentally acceptable fluids (vegetable or polyglycol base) please consult us.
Fluid Temperature	°C (°F)	–20....+80 (-4....+176) (NBR)
Permissible degree of fluid contamination		ISO 4572: $\beta_x \geq 75$ X=12...15 ISO 4406: class 20/18/15 NAS 1638: class 9
Viscosity range	mm^2/s	5....420

Note

For applications with different specifications consult us

RF 1030 - 62/02 2016, Bosch Rexroth AG

739

Ordering details

01		02		03				04
TC	**-**	**02**	**-**		**-**	**00**	**-**	**AL**

Family

01	Outlet Elements	**TC**

Configuration

02	with additional inlet port P1	**02**

Ports

03	G 3/8 DIN 3852	**02**
	G 1/2 DIN 3852	**03**

Material

04	Aluminium	**AL**
	Cast Iron	**CI**

Symbol

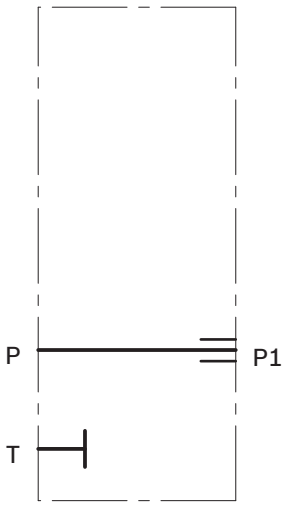

External dimensions and fittings

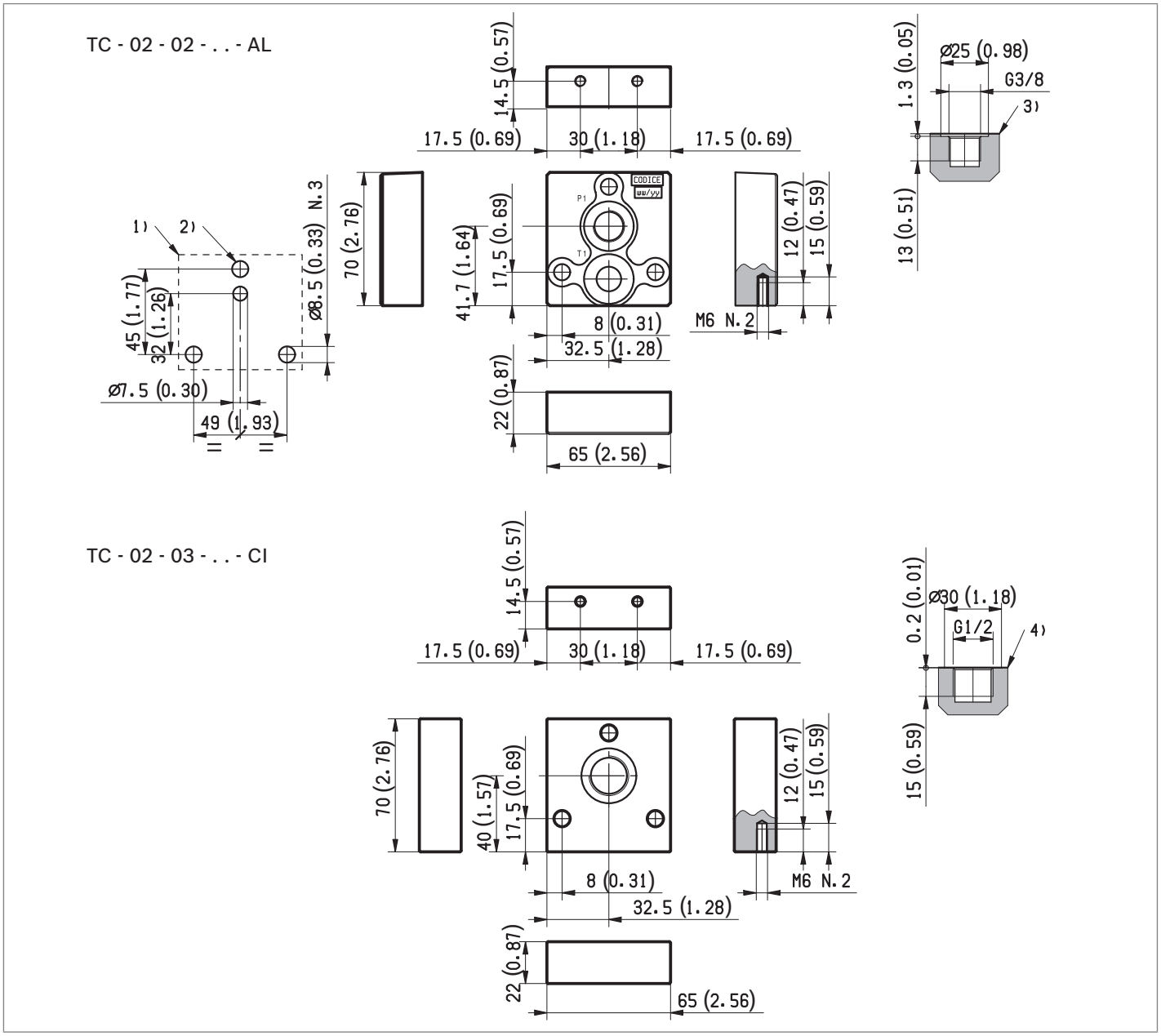

1 Flange specifications for coupling to the ED Directional Valve Elements.

2 For tie rod and tightening torque information see data sheet RE 18301-90.

3 Hydraulic Port P1 size G 3/8, for TC-02-02-...

4 Hydraulic Port P1 size G 1/2, for TC-02-03-...

Dimensions [mm (inches)]

Outlet Elements with additional inlet port P1 and tank port T1

TC-03-__-

Description

The outlet elements TC-03-__ are employed to connect the P and T channels of the ED elements of the Directional Valve Assembly, and to provide additional inlet port P1 and tank port T1, both with size either G 3/8 or G 1/2.
The outlet elements TC-03-__ are available in two versions:
- Body made of Black Anodized Aluminium (Al).
- Body made of Yellow Zinc plated (Cr+3) Cast Iron (CI).

Technical data

General		
Weight TC-03-02-..-AL element	kg (lbs)	0.25 (0.56)
Weight TC-03-03-..-AL element	kg (lbs)	0.25 (0.56)
Weight TC-03-02-..-CI element	kg (lbs)	0.65 (1.43)
Weight TC-03-03-..-CI element	kg (lbs)	0.65 (1.43)
Ambient Temperature	°C (°F)	–20....+50 (-4....+122) (NBR seals)
Hydraulic		
Maximum flow in P and T	l/min (gpm)	50 (13.2)
Maximum pressure for aluminium version (AL)	bar (psi)	250 (3625)
Maximum pressure for Cast Iron version (CI)	bar (psi)	310 (4500)
Hydraulic fluid General properties: it must have physical lubricating and chemical properties suitable for use in hydraulic systems such as, for example:		Mineral oil based hydraulic fluids HL (DIN 51524 part 1). Mineral oil based hydraulic fluids HLP (DIN 51524 part 2). For use of environmentally acceptable fluids (vegetable or polyglycol base) please consult us.
Fluid Temperature	°C (°F)	–20....+80 (-4....+176) (NBR)
Permissible degree of fluid contamination		ISO 4572: $\beta_x \geq 75$ X=12...15 ISO 4406: class 20/18/15 NAS 1638: class 9
Viscosity range	mm^2/s	5....420

Note
For applications with different specifications consult us

RF 1080 - 63/02 2016, Bosch Rexroth AG

Ordering details

01		02		03			04
TC	**-**	**03**	**-**		**-**	**00**	**-**	

Family

01	Outlet Elements	**TC**

Configuration

02	with additional inlet port P1 and tank port T1	**03**

Ports

03	G 3/8 DIN 3852	**02**
	G 1/2 DIN 3852	**03**

Material

04	Aluminium	**AL**
	Cast Iron	**CI**

Symbol

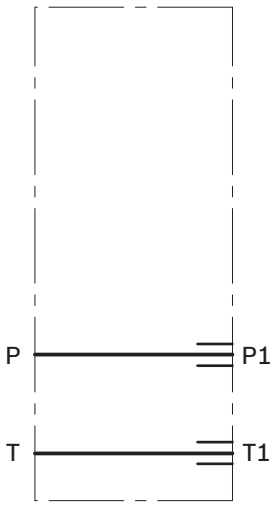

External dimensions and fittings

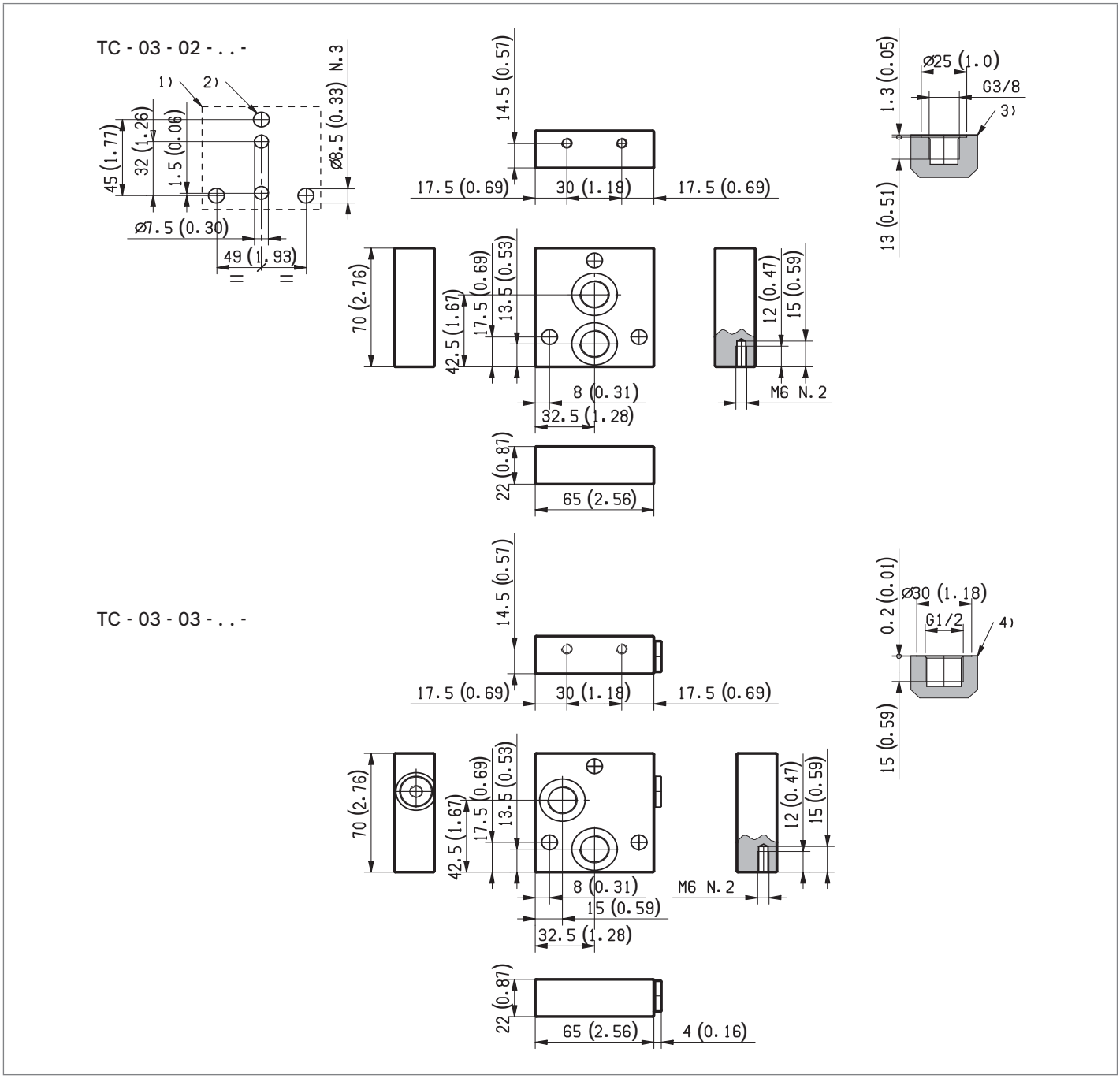

1 Flange specifications for coupling to the ED Directional Valve Elements.

2 For tie rod and tightening torque information see data sheet RE 18301-90.

3 Hydraulic Ports P1 and T1 size G 3/8, for TC-03-02-...

4 Hydraulic Ports P1 and T1 size G 1/2, for TC-03-03-...

Dimensions [mm (inches)]

Outlet Elements with Pressure Relief Valve and with P, T and M ports for downstream operators

TC-04-__-

Technical data

General		
Weight TC 04-02-00-AL element	kg (lbs)	0.31 (0.67)
Weight TC 04-02-S_-AL element	kg (lbs)	0.44 (0.96)
Ambient Temperature	°C (°F)	–20....+50 (-4....+122) (NBR seals)
Hydraulic		
Maximum flow in P and T	l/min (gpm)	35 (9.2)
Maximum pressure	bar (psi)	250 (3625)
Hydraulic fluid General properties: it must have physical lubricating and chemical properties suitable for use in hydraulic systems such as, for example:		Mineral oil based hydraulic fluids HL (DIN 51524 part 1). Mineral oil based hydraulic fluids HLP (DIN 51524 part 2). For use of environmentally acceptable fluids (vegetable or polyglycol base) please consult us.
Fluid Temperature	°C (°F)	–20....+80 (-4....+176) (NBR)
Permissible degree of fluid contamination		ISO 4572: $\beta_x \geq 75$ X=10...12 ISO 4406: class 19/17/14 NAS 1638: class 8
Viscosity range	mm^2/s	5....420

Note
For applications with different specifications consult us

Description
The outlet elements TC-04-__ are employed to connect the P and T channels of the ED elements of the Directional Valve Assembly to the P1 and T1 ports for downstream operators. They incorporate a pressure relief cartridge which controls the maximum pressure in the P1 line. The relief setting can be checked through the Test Point port M. The TC-04-__ elements are available with body made of Black Anodized Aluminium (Al).
Hydraulic Ports P1 and T1 are size G 3/8, and Test Point port (M) is G 1/4.

RF 1630 - 64/02 2016, Bosch Rexroth AG

Ordering details

01	02	03	04	05
TC	**04**		**00**	**AL**

Family

01	Outlet Elements	**TC**

Configuration

02	With Pressure Relief Valve and through ports P and T	**04**

Ports

03	G 3/8 DIN 3852	**02**

Pressure Relief range

04	Without pressure relief valve	**00**
	25-125bar (362-1813 psi)	**SN**
	40-200bar (580-2900 psi)	**SB**
	200-350bar (2900-5076 psi)	**SV**

Material

05	Aluminium	**AL**

Symbol

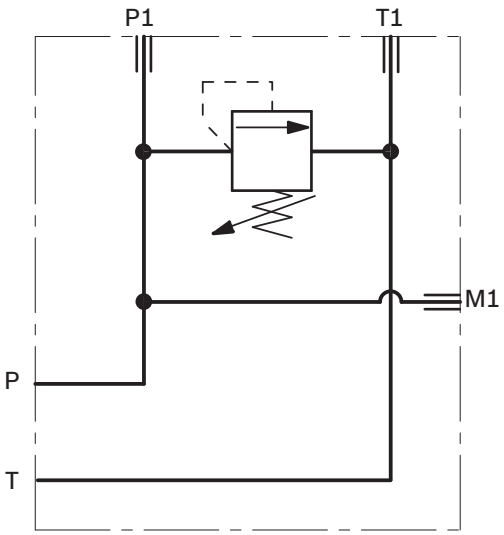

External dimensions and fittings

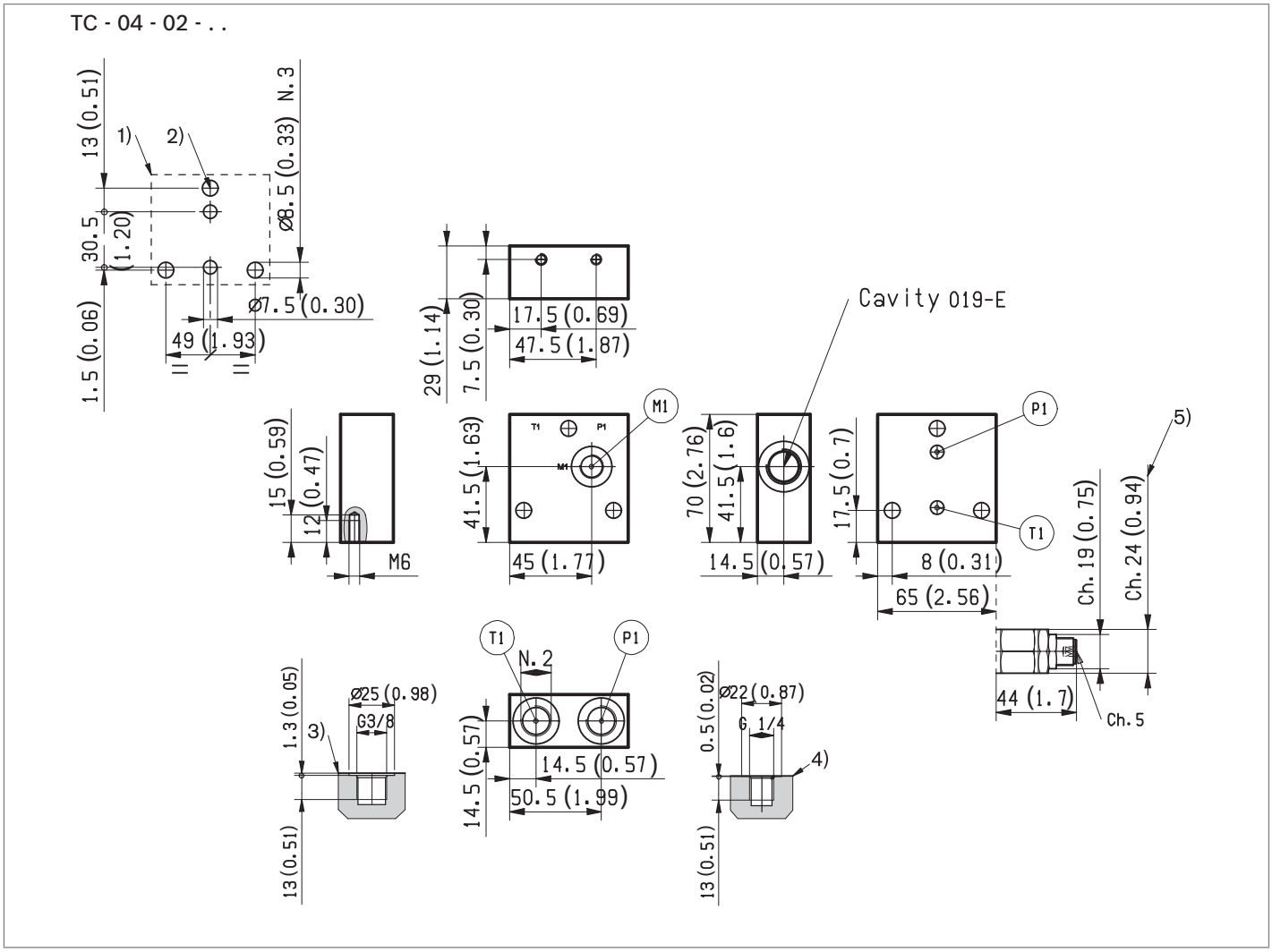

1 Flange specifications for coupling to the ED Directional Valve Elements.
2 For tie rod and tightening torque information see data sheet RE 18301-90.
3 Hydraulic Ports P1 and T1 size G 3/8 for downstream operators.
4 Test Point port (M) G 1/4...
5 Pressure Relief Cartridge VMD1025, with screw type adjuster (refer to RE 18301-91).

Dimensions [mm (inches)]

Modular directional valves

Accessories

Designation		Data sheet	Page
Accessories and fixation elements		18301-90	753
Cartridge valves		18301-91	759

Accessories and fixation elements

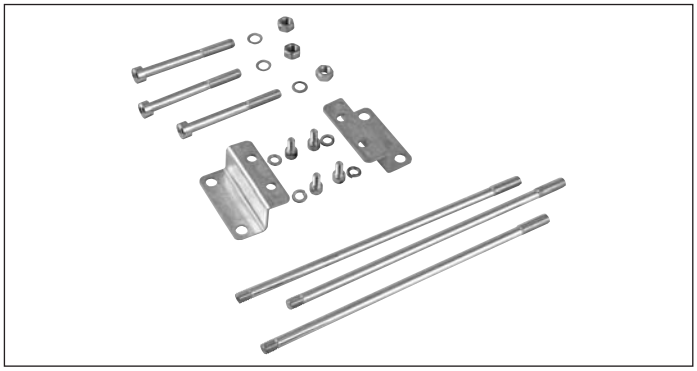

Contents

Assembly of directional elements	2
Fitting of mounting brackets	3
Assemblying of flangeable element	3
Kit for spacers between elements	4
Flow restrictor	4
Series circuits	5
Hydraulic Symbol with intermediate element between A and B lines	5

RF 1080 - 90/05 2016, Bosch Rexroth AG

Assembly of directional elements

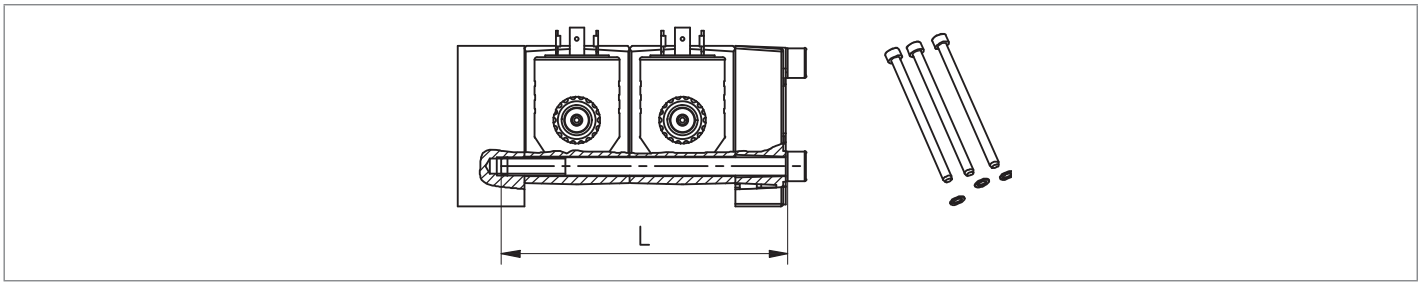

For 1 or 2 elements,
the assembly kit is composed by 3 screws and 3 washers

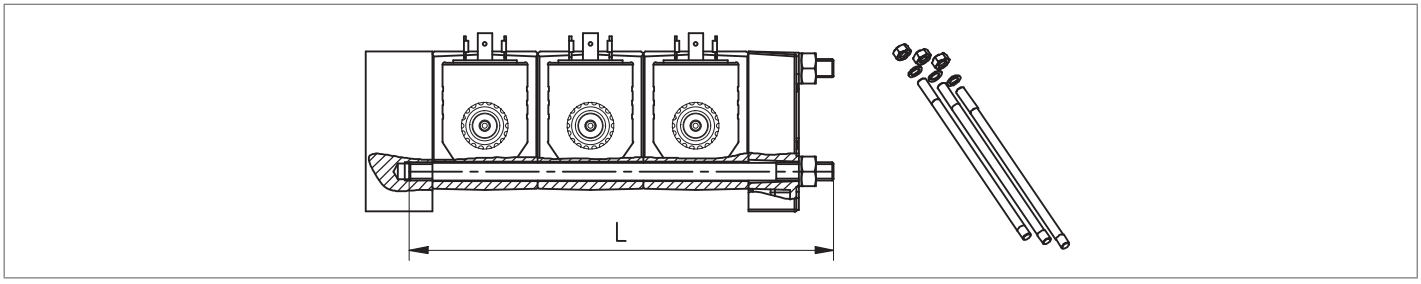

For 3 or more elements,
the assembly kit is composed by 3 tie-rods, 3 washers and 3 nuts

Total flangeable elements	Screw or tie-rod length L mm (inch)	Tightening torque for tie rod on entry plate Nm (ft-lb)	Tightening torque for locking nut (opt.) Nm (ft-lb)	Tightening torque for screws or nuts Nm (ft-lb)	Reference code	Type	Material Number
1	80 (3.150)	N/A	N/A	17-18 (12,5-13,3)	K-2201	Screw	R933003721
2	125 (4.921)	N/A	N/A	17-18 (12,5-13,3)	K-2202	Screw	R933003722
3	185 (7.283)	17-23 (12,5-17)	5-6 (3,7-4,4)	17-18 (12,5-13,3)	K-2203	Tie-rod	R933003723
4	230 (9.055)	17-23 (12,5-17)	5-6 (3,7-4,4)	17-18 (12,5-13,3)	K-2204	Tie-rod	R933003724
5	275 (10.827)	17-23 (12,5-17)	5-6 (3,7-4,4)	17-18 (12,5-13,3)	K-2205	Tie-rod	R933003725
6	320 (12.598)	17-23 (12,5-17)	5-6 (3,7-4,4)	17-18 (12,5-13,3)	K-2206	Tie-rod	R933003726
7	365 (14.370)	17-23 (12,5-17)	5-6 (3,7-4,4)	17-18 (12,5-13,3)	K-2207	Tie-rod	R933003727
8	410 (16.142)	17-23 (12,5-17)	5-6 (3,7-4,4)	17-18 (12,5-13,3)	K-2208	Tie-rod	R933003728
9	460 (18.110)	17-23 (12,5-17)	5-6 (3,7-4,4)	17-18 (12,5-13,3)	K-2209	Tie-rod	R933003729
10	510 (20.079)	17-23 (12,5-17)	5-6 (3,7-4,4)	17-18 (12,5-13,3)	K-2210	Tie-rod	R933000000

Fitting of mounting brackets

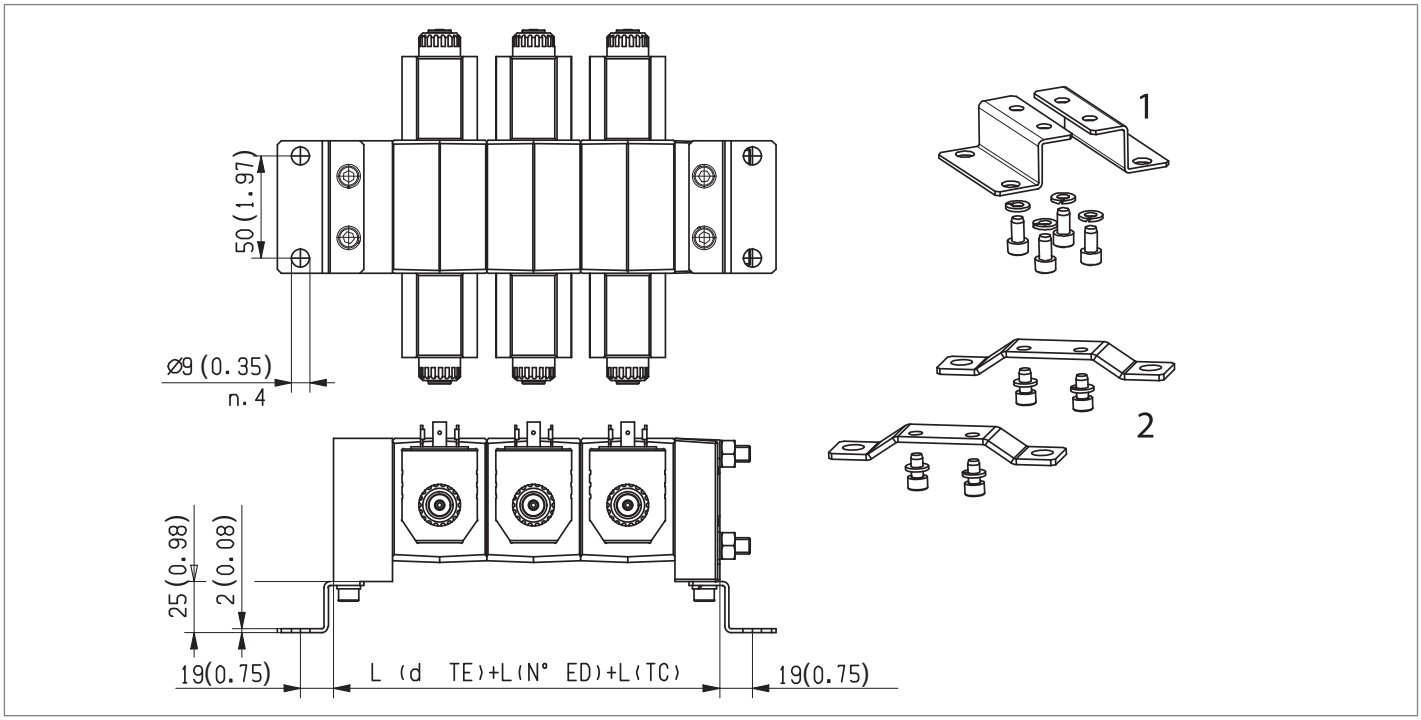

The kit is composed by 2 brackets, 4 screws and 4 washers.

Nr.	Type	Tightening torque Nm (ft-lb)	Material Number
1	K-2215	9-10 (6.64-7.37)	R933003730
2	K-2216	9-10 (6.64-7.37)	R933007089

Assemblying of flangeable element

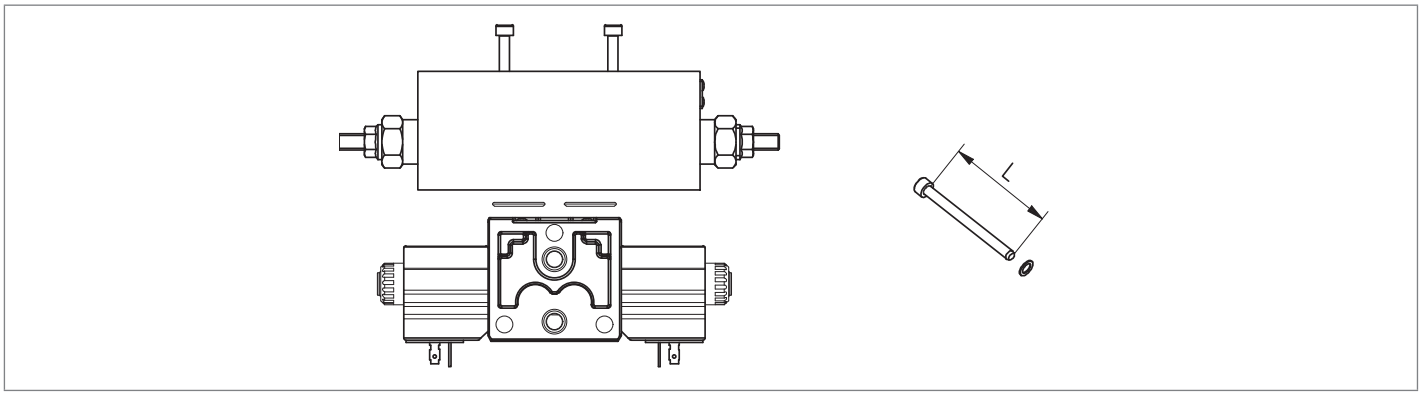

The assembly kit is composed by 4 screws and 4 washers.

Total flangeable elements	Screw or tie-rod length L mm (inch)	Tightening torque Nm (ft-lb)	Reference code	Material Number
1	60 (2.326)	5-6 (3.69-4.42)	K-2221	R933003731
2	120 (4.724)	5-6 (3.69-4.42)	K-2222	R933003732
3	175 (6.890)	5-6 (3.69-4.42)	K-2223	R933003733

Kit for spacers between elements

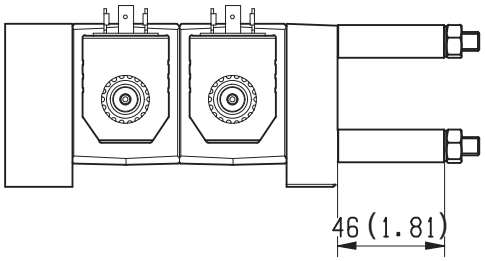

The spacers (code 44-00257012) are fitted in order to install longer tie-rods for future insertion of an extra directional element.

Flow restrictor

Material description	Orifice I.D. mm (inch)	Material Number
50-04999	Closed	R933002917
50-05003	0,3 (0.012)	R933002922
50-05004	0,4 (0.016)	R933003398
50-05001	0,5 (0.020)	R933002920
50-05000	0,6 (0.024)	R933002919
50-05002	0,7 (0.028)	R933002921
50-0500	0,8 (0.031)	R933002918
50-05008	0,9 (0.035)	R933002923
50-0501	1,0 (0.039)	R933002924
50-05015	1,1 (0.043)	R933002925
50-0502	1,2 (0.047)	R933002926
50-05022	1,35 (0.053)	R933002927
50-0503	1,5 (0.059)	R933002928
50-05032	1,6 (0.063)	R933002930
50-05031	1,7 (0.067)	R933002929
50-0504	2,0 (0.079)	R933002931
50-0505	2,2 (0.087)	R933002933
50-05045	2,5 (0.098)	R933002932
50-0506	3,0 (0.118)	R933002934
50-0508	3,2 (0.126)	R933002935
50-0510	4,0 (0.157)	R933007391
50-0515	5,0 (0.197)	R933008462

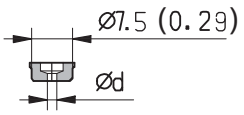

Material description	Orifice I.D. mm (inch)	Material Number
50-07000	Closed	R933002936
50-07020	0,8 (0.031)	R933002937
50-07021	1,0 (0.039)	R933007090
50-07022	1,1 (0.043)	R933007930
50-07023	1,2 (0.047)	R933007633
50-07024	1,4 (0.055)	R933007704
50-07030	1,6 (0.063)	R933002938
50-07031	1,7 (0.067)	R933007091
50-07040	2,0 (0.079)	R933002939
50-07043	2,25 (0.089)	R933009044
50-07045	2,5 (0.098)	R933007477
50-07047	2,75 (0.108)	R933002940
50-07050	3,0 (0.118)	R933002941
50-07056	3,5 (0.138)	R933009575
50-07057	3,75 (0.148)	R933007703
50-07060	4,0 (0.157)	R933007631
50-07070	5,5 (0.217)	R933007567

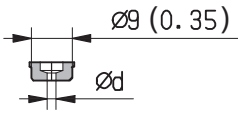

Series circuits

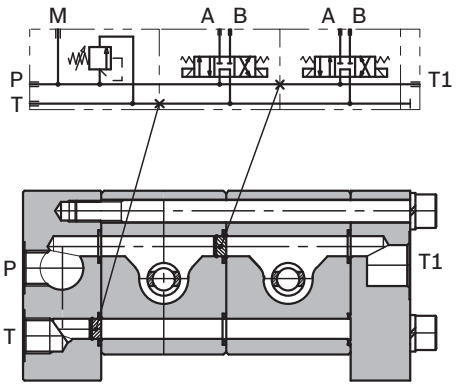

Flangeable elements in even number

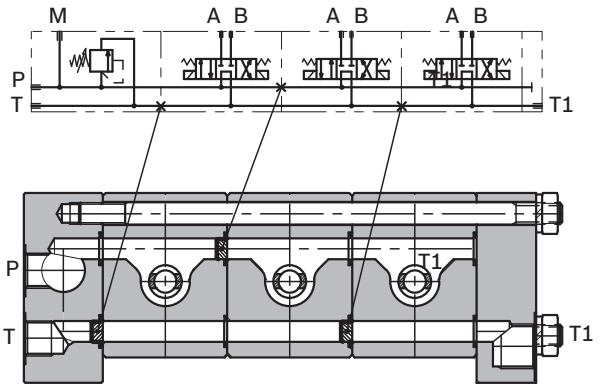

Flangeable elements in odd number

To have information about the pressure drops on elements, see the (DELTA P-Q) curves of P>T of A201 circuit of ED1 (RE 18301-01) or ED2 (RE 18301-02) modular elements.

2

Hydraulic Symbol with intermediate element between A and B lines

Flangeable elements with A and B ports in one side

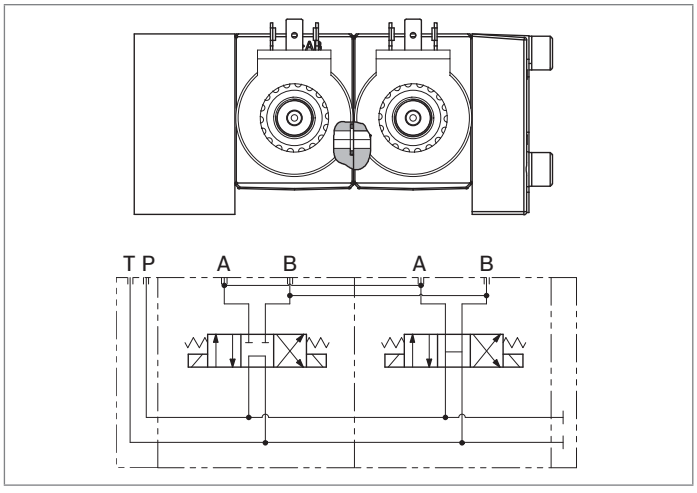

scheme 1

Also available flangeable elements with A and B ports in one side, oriented either toward the inlet (TE) side, or toward the outlet (TC) side (see Hydraulic symobol 1).

Flangeable elements with A and B ports in one side, and with an intermediate body for connection of A and P

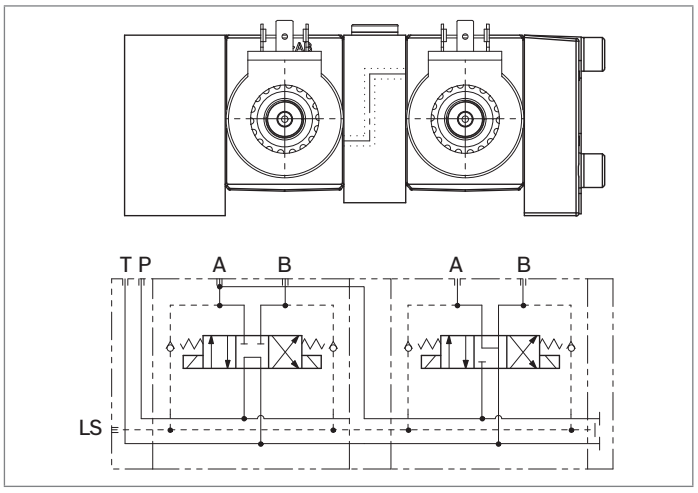

scheme 2

For flangeable elements with A and B ports in one side there is also a flangeable body to connect the A port of one element to the P port of the following element (see Hydraulic symobol 2).

Nominal sizes 08 to 10, special cavities

Contents

Relief, direct acting guided poppet type Common cavity, Size 10 2
Relief, direct acting guided poppet type Special cavity, Size 019-E 6
Proportional valves non compensated flow regulators Common cavity, Size 10 8
Coils - Connectors 12

RE 29130-91/05.2013 Bosch Rexroth AG Control Valves

Dimensions [mm (inches)]

Relief, direct acting guided poppet type Common cavity, Size 10

VMD1.040 0T.M1.03 - X - 99 - Z

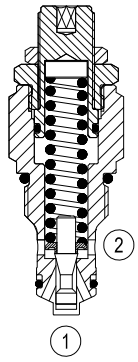

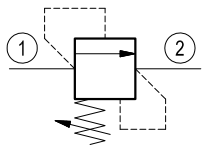

Description

Flow is blocked from 1 to 2 until pressure increases to meet the selected valve setting, lifting the poppet from its seat and allowing relief flow through port 2 to tank. Pressure at port 2 is additive to the relief setting of the valve. The unique Bosch Rexroth Oil Control poppet design provides enhanced stability at all flows and pressures.

Performance

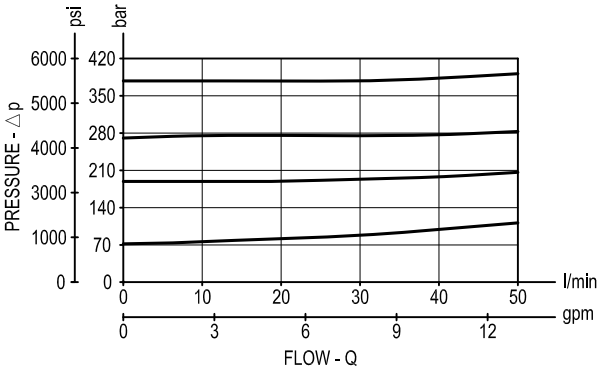

Technical Data

General		
Max pressure	bar (psi)	350 (5000)
Max flow	l/min (gpm)	50 (13)
Installation torque	Nm (ft-lb)	55-65 (41-48)
Cavity		CA-10A-2N
Weight	kg (lbs)	0.17 (0.38)
Fluid temperature range	°C (°F)	between -30 (-22) and +100 (+212)

Preferred types

Type	Material number
0TM103039910000	R901099401
0TM103039920000	R901099402
0TM103039935000	R901114696

Dimensions

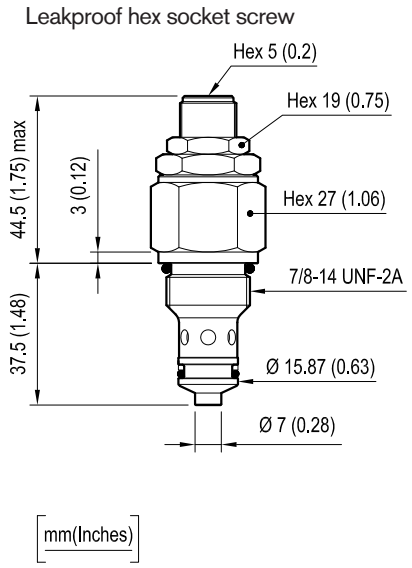

Ordering code

0T.M1.03	X	99	Z

Relief, direct acting guided poppet type

Adjustments

= 03 Leakproof hex. socket screw

Common cavity Size 10

	SPRINGS		
	Adj. press. range bar (psi)	Press. increase bar/turn (psi/turn)	Std. setting press. bar (psi) (Q=5 l/min)
= 10	25-120 (350-1750)	16.5 (239)	100 (1450)
= 20	40-200 (580-2900)	26.5 (384)	180 (2600)
= 35	200-350 (2900-5000)	51 (740)	350 (5000)

Dimensions [mm (inches)]

Relief, direct acting guided poppet type Common cavity, Size 10

VMD1.070 0T.M1.04 - X - 99 - Z

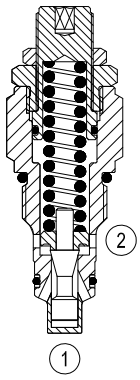

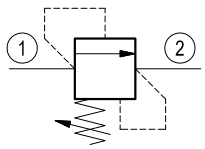

Description

Flow is blocked from 1 to 2 until pressure increases to meet the selected valve setting, lifting the poppet from its seat and allowing relief flow through port 2 to tank. Pressure at port 2 is additive to the relief setting of the valve. The unique Bosch Rexroth Oil Control poppet design provides enhanced stability at all flows and pressures.

Performance

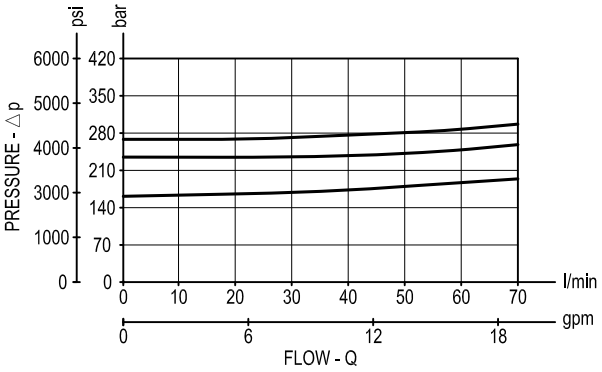

Technical Data

General		
Max pressure	bar (psi)	260 (3800)
Max flow	l/min (gpm)	70 (19)
Installation torque	Nm (ft-lb)	55-65 (41-48)
Cavity		CA-10A-2N
Weight	kg (lbs)	0.18 (0.4)
Fluid temperature range	°C (°F)	between -30 (-22) and +100 (+212)

Preferred types

Type	Material number
0TM104039905000	R901099575
0TM104039910000	R901099604
0TM104039920000	R901116269
0TM104039935000	R901099642

Dimensions

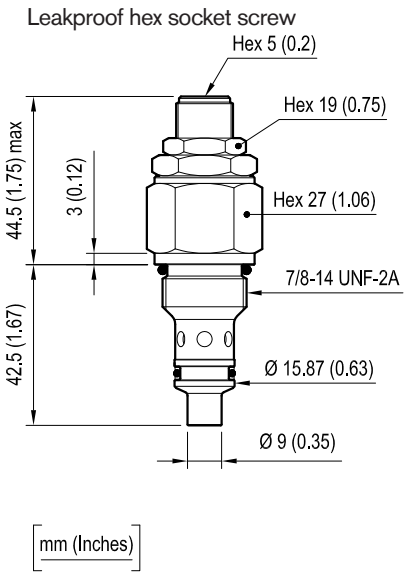

Ordering code

0T.M1.04	X	99	Z

Relief, direct acting guided poppet type

Adjustments

= 03 Leakproof hex. socket screw

Common cavity Size 10

	SPRINGS		
	Adj. press. range bar (psi)	Press. increase bar/turn (psi/turn)	Std. setting press. bar (psi) (Q=5 l/min)
= 05	10-60 (145-870)	10 (145)	50 (725)
= 10	40-110 (580-1600)	17 (247)	100 (1450)
= 20	110-220 (1600-3200)	31.5 (457)	200 (2900)
= 35	220-260 (3200-3800)	37 (537)	250 (3600)

Dimensions [mm (inches)]

Relief, direct acting guided poppet type Special cavity, Size 019-E

VMD1.025 0T.M1.02 - X - 99 - Z

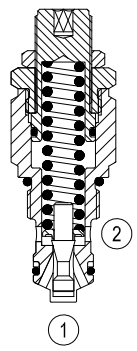

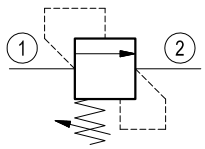

Description

Flow is blocked from 1 to 2 until pressure increases to meet the selected valve setting, lifting the poppet from its seat and allowing relief flow through port 2 to tank. Pressure at port 2 is additive to the relief setting of the valve. The unique Bosch Rexroth Oil Control poppet design provides enhanced stability at all flows and pressures.

Performance

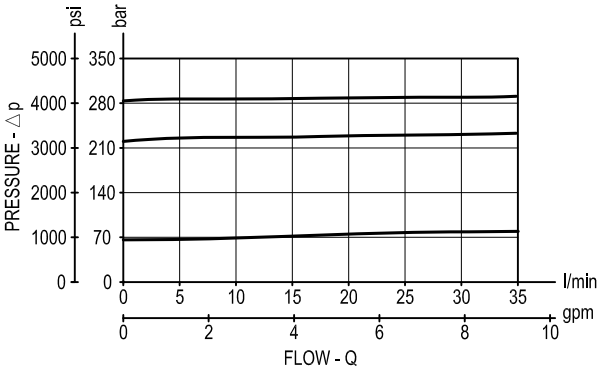

Technical Data

General		
Max pressure	bar (psi)	350 (5000)
Max flow	l/min (gpm)	35 (9)
Installation torque	Nm (ft-lb)	40-45 (30-33)
Special Cavity		019-E
Weight	kg (lbs)	0.13 (0.29)
Fluid temperature range	°C (°F)	between -30 (-22) and +100 (+212)

Preferred types

Type	Material number
0TM102039910000	
0TM102039920000	R901091925
0TM102039935000	R901091920

Dimensions

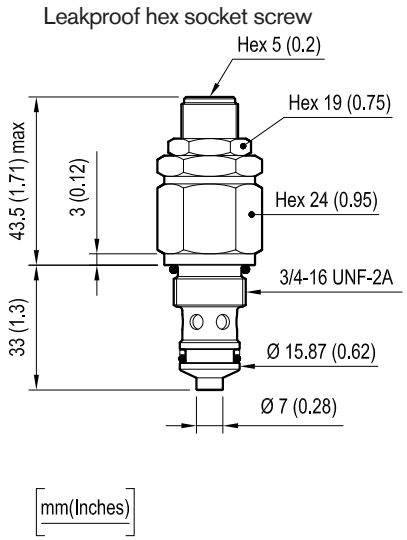

Ordering code

0T.M1.02	X	99	Z

Relief, direct acting guided poppet type

Adjustments

= 03 Leakproof hex. socket screw

Special cavity Size 019-E

	SPRINGS		
	Adj. press. range bar (psi)	Press. increase bar/turn (psi/turn)	Std. setting press. bar (psi) (Q=5 l/min)
= 10	25-120 (350-1750)	16.5 (239)	100 (1450)
= 20	40-200 (580-2900)	26.5 (384)	180 (2600)
= 35	200-350 (2900-5000)	51 (740)	350 (5000)

Proportional valves non compensated flow regulators Common cavity, Size 10

VEP-5A-2Q-09-NC-2F OD.92 - K - 77 - Y - 01

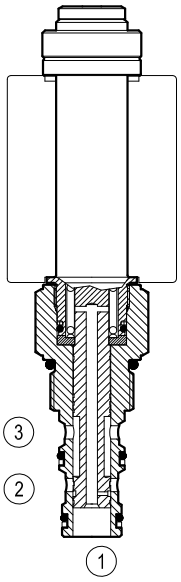

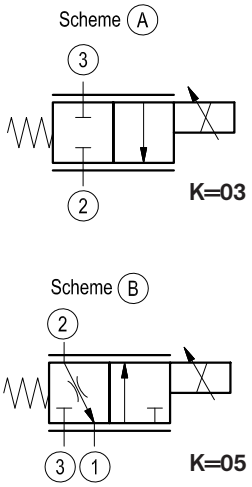

Description

Flow is blocked from 1 to 2 until pressure increases to meet the selected valve setting, lifting the poppet from its seat and allowing relief flow through port 2 to tank. Pressure at port 2 is additive to the relief setting of the valve. The unique Bosch Rexroth Oil Control poppet design provides enhanced stability at all flows and pressures.

Performance

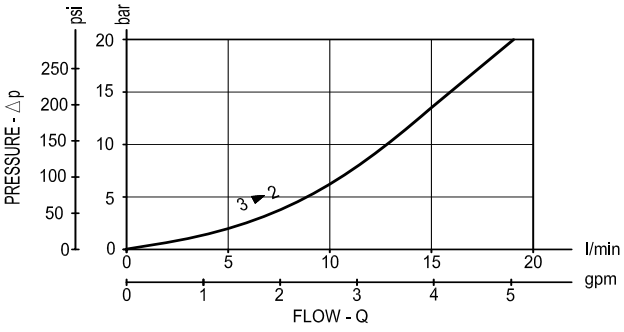

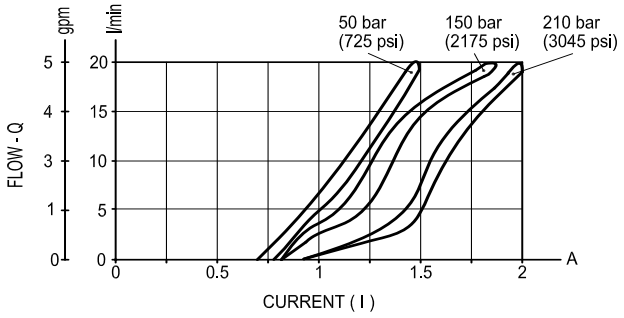

Technical Data

General		
I max(±15%) for 12 V DC coil	A	2
I min(±15%) for 12 V DC coil	A	0.9
Recommended PWM frequency	Hz	150-180
Internal leakage at 210 bar (3000 psi) with 46 cSt oil	cm^3/min (in^3/min)	max 180 (11)
Cavity		CA-10A-3N
Coil	S5 (must be ordered separately)	
Minimum voltage required	90% of nominal value	
Testing conditions - Seals	Internal and external seals are designed for applications that operate within the fluid temperature range	
Weight	kg (lbs)	0.31 (0.68)
Fluid temperature range	°C (°F)	between -30 (-22) and +100 (+212)
Ambient temperature	°C (°F)	-30 (86) and +60 (+140)
Mounting position		unrestricted

N.B. It is recommended to bleed air carefully before operation.

Preferred types

Type	Material number
OD920377030100	R934001518
OD920377040100	R934001521
OD920577030100	R934001524
OD920577040100	R934001526

Dimensions

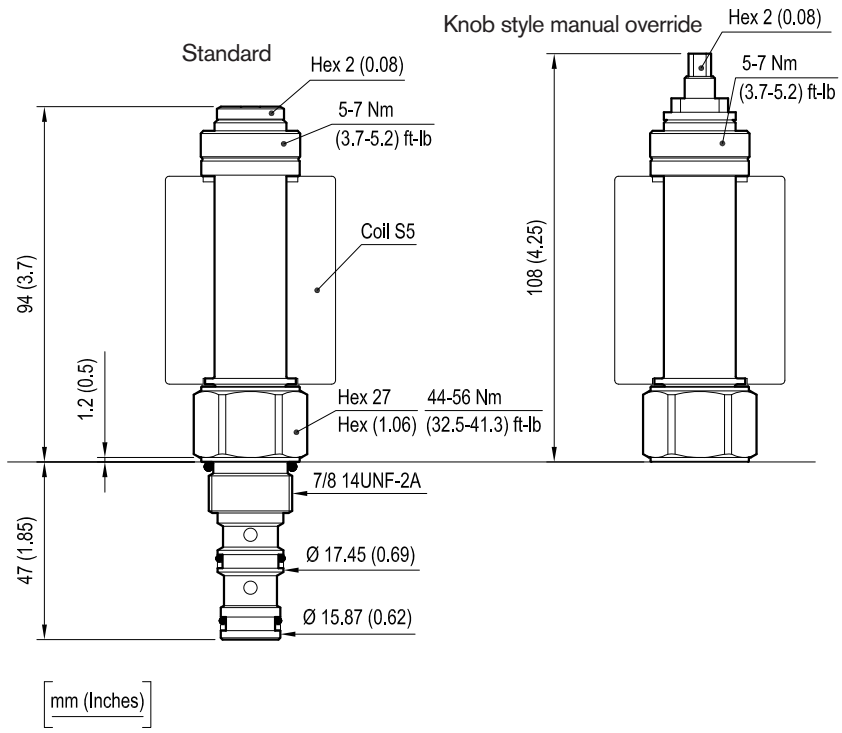

Ordering code

OD.92	K	77	Y	01

Proportional valves non compensated flow regulators

Hydraulic scheme
= **03** see scheme A
= **05** see scheme B

Common cavity Size 10

Ordering options
= **03** Standard
= **04** knob style manual override

Dimensions [mm (inches)]

Proportional valves non compensated flow regulators Common cavity, Size 10

VEP-5A-2Q-09-NC-6F OD.92 - K - 77 - Y - 03

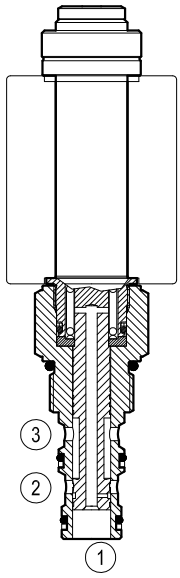

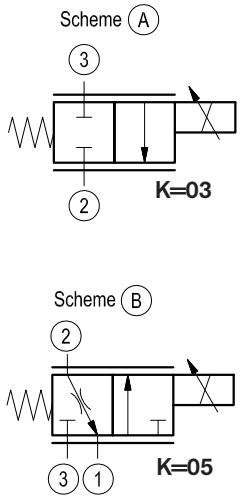

Description

Flow is blocked from 1 to 2 until pressure increases to meet the selected valve setting, lifting the poppet from its seat and allowing relief flow through port 2 to tank. Pressure at port 2 is additive to the relief setting of the valve. The unique Bosch Rexroth Oil Control poppet design provides enhanced stability at all flows and pressures.

Performance

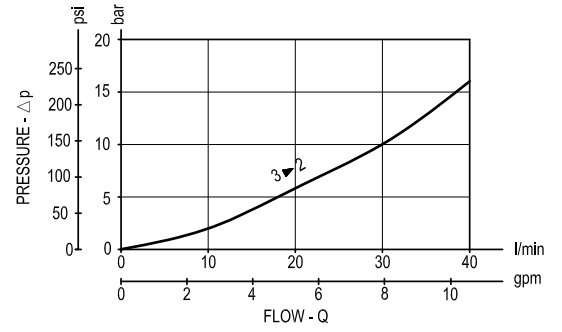

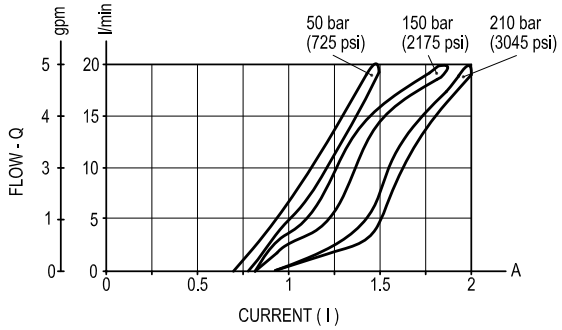

Technical Data

General		
Operating pressure	bar (psi)	210 (3000)
Rated flow	l/min (gpm)	40 (11)
I max(±15%) for 12 V DC coil	A	2
I min(±15%) for 12 V DC coil	A	0.8
Recommended PWM frequency	Hz	150-180
Internal leakage at 210 bar (3000 psi) with 46 cSt oil	cm^3/min (in^3/min)	max 180 (11)
Cavity		CA-10A-3N
Coil	S5 (must be ordered separately)	
Minimum voltage required	90% of nominal value	
Testing conditions - Seals	Internal and external seals are designed for applications that operate within the fluid temperature range	
Weight	kg (lbs)	0.31 (0.68)
Fluid temperature range	°C (°F)	between -30 (-22) and +100 (+212)
Ambient temperature	°C (°F)	-30 (86) and +60 (+140)
Mounting position		unrestricted

N.B. It is recommended to bleed air carefully before operation.

Preferred types

Type	Material number
OD920377030300	R934001520
OD920377040300	R934001522
OD920577030300	R934001525
OD920577040300	R934001528

Dimensions

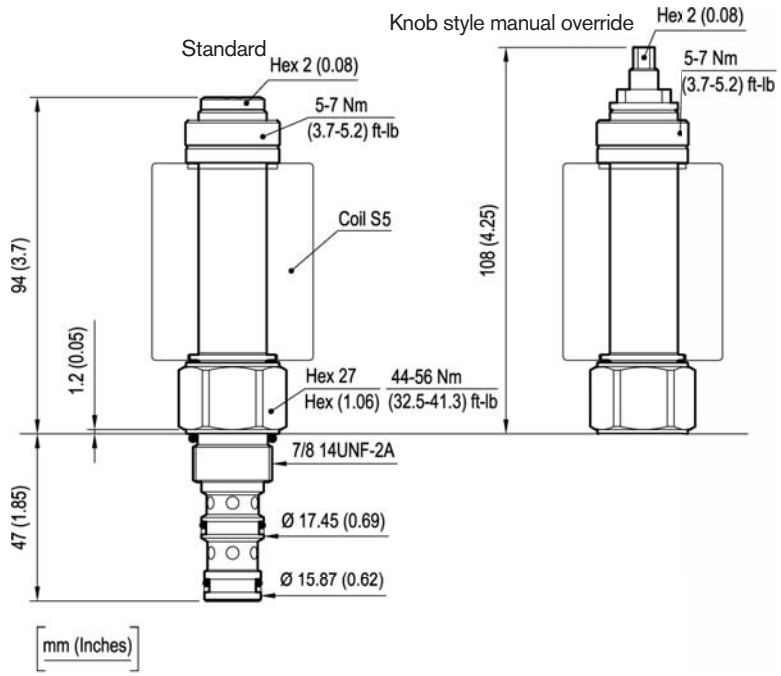

Ordering code

OD.92	K	77	Y	03

Proportional valves non compensated flow regulators

Hydraulic scheme
= **03** see scheme A
= **05** see scheme B

Common cavity Size 10

Ordering options
= **03** Standard
= **04** knob style manual override

Coils - Connectors

COIL S5 - CLASS H OD.02.09.01.30 - Z - 01

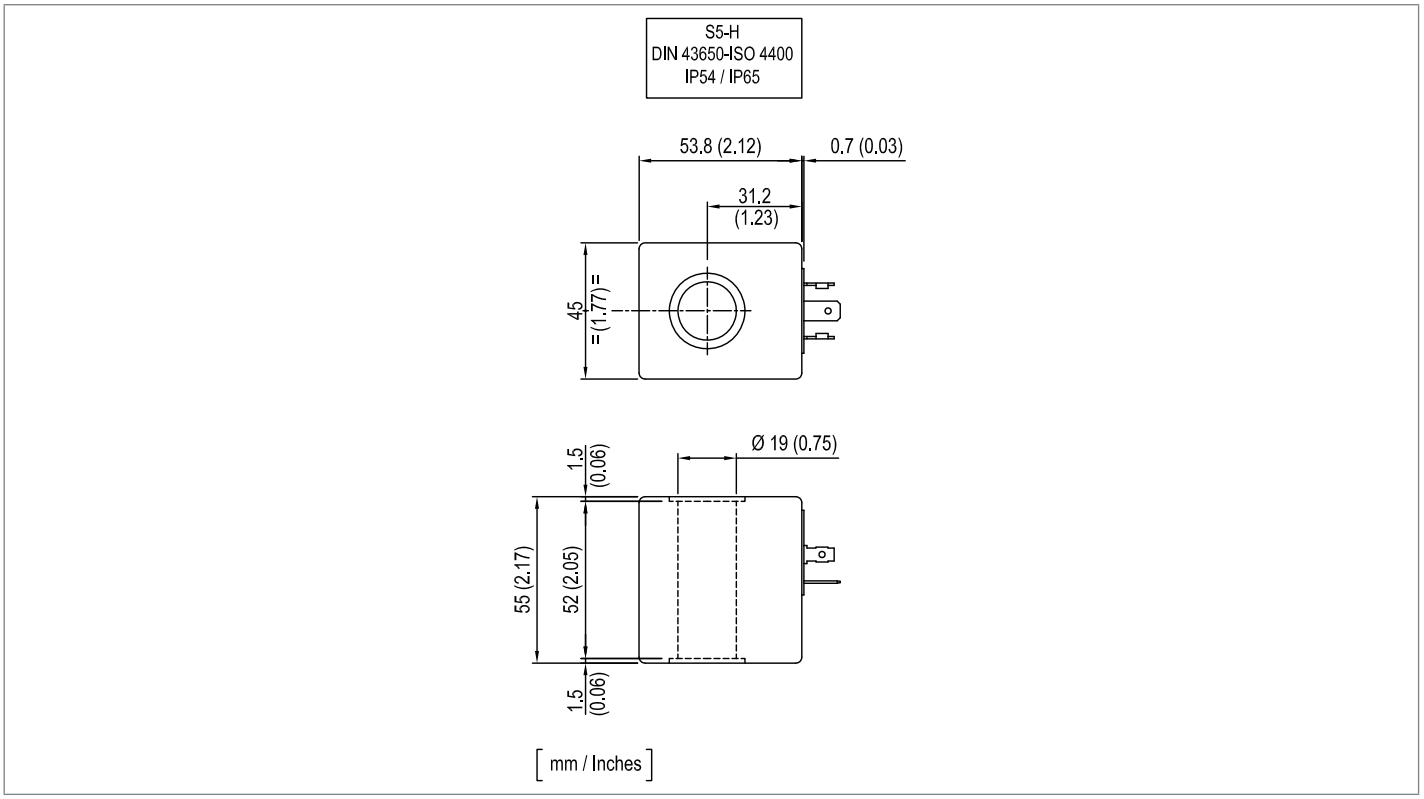

Technical Data

General		
Weight	kg (lbs)	0.47 kg (1.04 lbs)
Heat insulation Class F	°C (°F)	+180 (356°)
Ambient temperature	°C (°F)	-30 (86) and +60 (+140)

Inlet voltage fluctuations must not exceed ±10% of nominal voltage to obtain correct operation and long life coils.

Ordering Code

Z	Voltage V	Resistance Ohm (±7%)	Power W	Current A		ΔT °C (°F)
	Nominal	Ta = 20-25°C (68-77°F)	Cold coil	Cold coil	Hot coil	1 hour energized at Ta=20-25°C (68-77°F) Nominal voltage
OB	12 DC	6.2	23	1.92	1.41	92-96 (198-205)
OC	24 DC	24.9	23	0.96	0.71	

Flow diverters
3/2 ways/positions

Designation	Description	Ports/Size	Code	Data sheet	Page
3/2 ways/positions flow diverters	VS 70	G 1/4 / Size 4	L700_	18302-01	773
3/2 ways/positions flow diverters	VS81, VS82, VS84, VS85	G 3/8, G 1/2, SAE 6, SAE 8 / Size 6	L705_	18302-02	781
3/2 ways/positions flow diverters	VS91, VS92, VS95	G 1/2, G 3/4, SAE 12 / Size 12	L706_	18302-03	789

3/2 ways/positions flow diverters L700... (VS70)

Size 4
Series 00
Maximum operating pressure 310 bar (4500 psi)
Maximum flow 20 l/min (5.3 gpm)
Ports G 1/4

General specifications

3 way 2 position valve.
Directional spool valve with direct solenoid control.
Hydraulic / pneumatic pilot , or manual push and twist control available as option.
Control spool operated by solenoid, with easily removable coil fastened by a ring nut.
Wet pin tube for DC coil, with push rod for mechanical override in case of voltage shortage.
Unrestricted 360° orientation of DC coil.
Control spool held in normal position by return spring.
Optional manual override (push-button or screw type).
Connectors available: DIN 43650 – ISO 4400, AMP Junior, DT04-2P (Deutsch), Free leads.

Contents

Ordering details	2
Symbols	2
Functional description	3
Technical data	3
Characteristic curves	5
External dimensions and fittings	6
Electric connection	7

RE 18301-01/02.2012 Bosch Rexroth AG

Ordering details

01	02		03	04	05	06	07	08	
L	**7**	**00**	**2**						**0**

Family

01	Compact directional valve	**L**

Type

02	Flow diverters	**7**

Ports

03	G 1/4 DIN 3852	**2**

Control type

04	Solenoid (coil C36) without manual override	**10**
	Solenoid (coil C36) with push-button type manual override	**1P**
	Solenoid (coil C36) with screw type manual override	**1F**
	Hydraulic / pneumatic control [1]	**P1**

Spool variants

05	Transitory position closed	**3A**
	Transitory position open	**3N**

Drain type

06	Internal drain	**I**
	External drain	**E**

Voltage supply		**31**	**07**	**04**	**03**	**01**	**00**	
07	Without coil	–	–	–	–	–	●	**00**
	12 V DC	●	●	●	●	●	–	**OB**
	13 V DC	–	●	–	–	●	–	**AD**
	24 V DC	●	●	●	●	●	–	**OC**
	27 V DC	–	●	–	–	●	–	**AC**
	48 V DC	–	–	●	–	●	–	**OD**
	110 V DC	–	–	–	–	●	–	**OE**

Electric connections

08	Without coils	**00**
	With coils, without mating connector DIN EN 175301-803 [2]	**01**
	With coils, with bi-directional diode, without mating connector vertical Amp-Junior	**03**
	With coils, with bi-directional diode, without mating connector horizontal Amp-Junior	**04**
	With coils, with bi-directional diode, without mating connector DT04-2P	**07**
	With coils and bipolar sheathed lead 350mm (13,8 in) long	**31**

● = Available – = Not available

Symbols

Drain type I

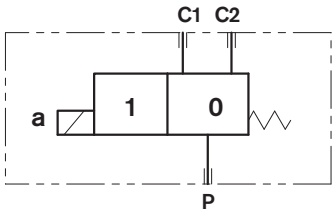

Drain type E

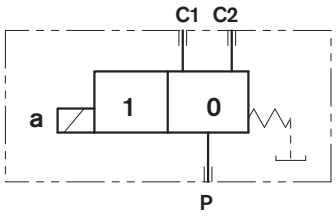

Spool variants

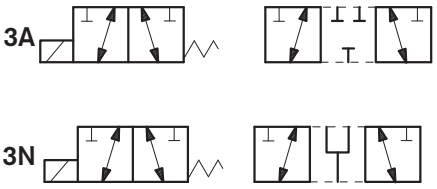

1) Minimum pressure 4 bar (58psi) with external drain (E), maximum pressure 200 bar (2901psi). With internal drain (I), at the minimum pressure (4 bar - 58psi), add the working pressure with ratio of 6,5:1. Example: With working pressure 100 bar (1450psi), minimum pilot pressure is 19.38 bar (281psi) ((100:6,5) + 4 bar (58psi)).

2) For connectors ordering code see data sheet RE 18325-90.

Functional description

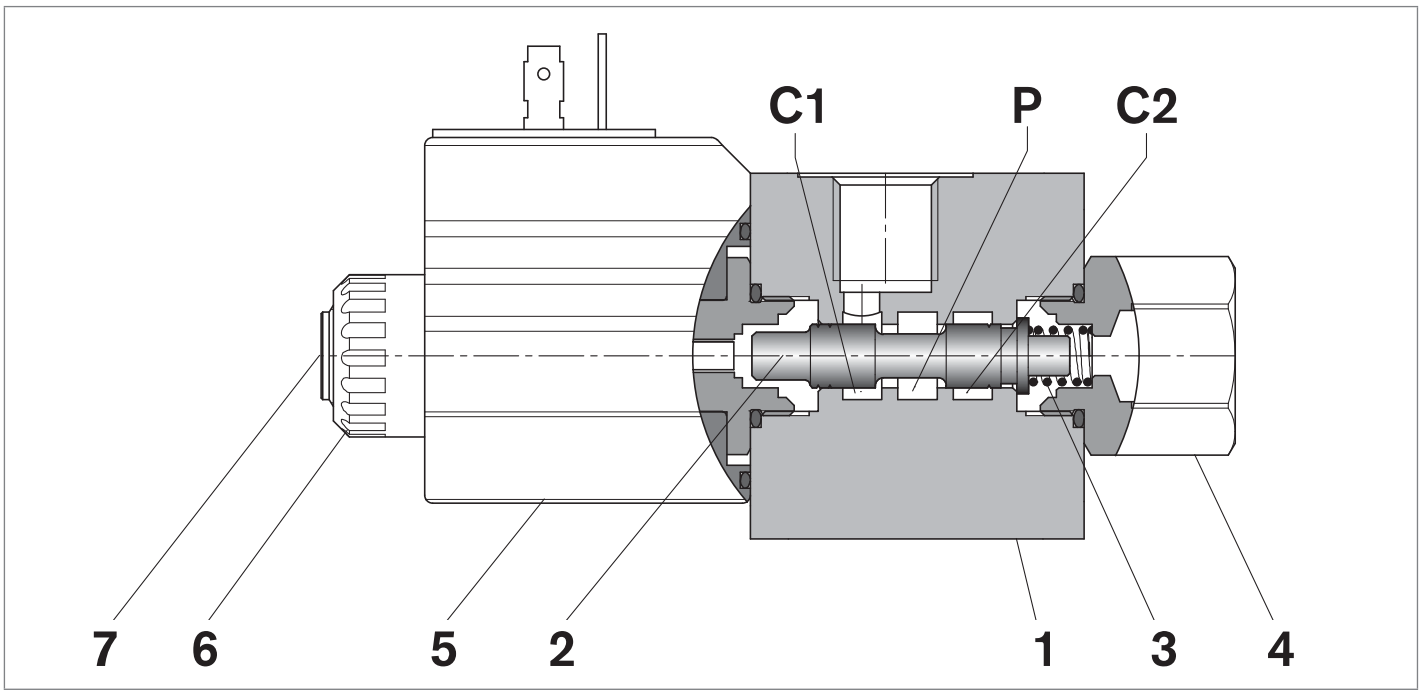

A valve basically consists of a housing **(1)**, a control spool **(2)**, a return spring **(3)** and a solenoid **(5)**. It is designed to select which one of two circuits **(C1 or C2)** is to be supplied with the oil delivered from one single hose **(P)**: with spool in position **“0”**, when the solenoid is de-energized, the flow goes from **P** to **C1**, with spool in position **“1”**, when the solenoid is energized the flow goes from **P** to **C2**.
With the coil de-energized, the return spring **(3)** pushes back the spool **(2)** and holds it in position **“0”**.
The coil **(5)** is fastened to the tube by the ring nut **(6)**.
The manual override **(7)** allows to shift the spool **(2)** also in case of voltage shortage.
An external drain **(4)**, to be connected to tank, ensures shifting operations also at higher working pressure.
Hydraulic / pneumatic pilot control for spool shifting is available upon request.

Technical data

General		
Valve weight	kg (lbs)	0.89 (1.960)
Ambient Temperature	°C (°F)	–20....+50 (-4....+122) (NBR seals)
Hydraulic		
Maximum pressure with external drain (“E” type)	bar (psi)	310 (4500)
Maximum pressure with internal drain (“I” type)	bar (psi)	250 (3625)
Maximum flow	l/min (gpm)	20 (5.3)
Hydraulic fluid General properties: it must have physical lubricating and chemical properties suitable for use in hydraulic systems such as, for example:		Mineral oil based hydraulic fluids HL (DIN 51524 part 1). Mineral oil based hydraulic fluids HLP (DIN 51524 part 2). For use of environmentally acceptable fluids (vegetable or polyglycol base) please consult us.
Fluid Temperature	°C (°F)	–20....+80 (-4....+176) (NBR seals)
Permissible degree of fluid contamination		ISO 4572: $\beta_x \geq 75$ X = 12...15 ISO 4406: class 20/18/15 NAS 1638: class 9
Viscosity range	mm^2/s	5....420

Internal leakage with 100 bar (1450 psi) secondary pressure at C	cc/min (in^3/min)	min.7 (0.43) max. 15 (0.74)					
Electrical							
Voltage type		DC					
Voltage tolerance (nominal voltage)	%	-10 .... +10					
Duty		Continuous, with ambient temperature ≤ 50°C (122°F)					
Coil wire temperature not to be exceeded	°C (°F)	150 (302)					
Insulation class		H					
Compliance with		Low Voltage Directive LVD 73/23/EC (2006/95/EC), 2004/108/EC					
Coil weight with connection EN 175301-803	kg (lbs)	0.215 (0.44)					
Voltage	V	12	13	24	27	48	110
Voltage type		DC	DC	DC	DC	DC	DC
Power consumption	W	26	26	26	26	26	26
Current (nominal at 20 °C (68 °F))	A	2.15	2.00	1.10	1.00	0.54	0.27
Resistance (nominal at 20 °C (68 °F))	Ω	5.5	6.5	22	28	89	413

Note
For applications with different specifications consult us.

Code	Voltage [V]	Connector type	Coil description	Marking	Coil Mat no.
OB 01	12 DC	EN 175301- 803 (Ex. DIN 43650)	C3601 12DC	12 DC	R933000044
OB 03	12 DC	AMP JUNIOR	C3603 12DC	12 DC	R933000047
OB 04	12 DC	AMP JUNIOR Horizontal	C3604 12DC	12 DC	R933002913
OB 07	12 DC	DEUTSCH DT 04-2P	C3607 12DC	12 DC	R933000048
OB 31	12 DC	Cable 350 mm long	C3631 12DC	12 DC	R933000045
AD 01	13 DC	EN 175301-803 (Ex. DIN 43650)	C3601 13DC	13 DC	R933000051
AD 07	13 DC	DEUTSCH DT 04-2P	C3607 13DC	13 DC	R933000049
OC 01	24 DC	EN 175301-803 (Ex. DIN 43650)	C3601 24DC	24 DC	R933000053
OC 03	24 DC	AMP JUNIOR	C3603 24DC	24 DC	R933000057
OC 04	24 DC	AMP JUNIOR Horizontal	C3604 24DC	24 DC	R933002914
OC 07	24 DC	DEUTSCH DT 04-2P	C3607 24DC	24 DC	R933000058
OC 31	24 DC	Cable 350 mm long	C3637 24DC	24 DC	R933000055
AC 01	27 DC	EN 175301-803 (Ex. DIN 43650)	C3601 27DC	27 DC	R933000056
AC 07	27 DC	DEUTSCH DT 04-2P	C3607 27DC	27 DC	R933000050
OD 01	48 DC	EN 175301-803 (Ex. DIN 43650)	C3601 48DC	48 DC	R933000059
OD 04	48 DC	AMP JUNIOR Horizontal	C3604 48DC	48 DC	R933002915
OE 01	110 DC	EN 175301-803 (Ex. DIN 43650)	C3601 110DC	110 DC	R933000061

Characteristic curves

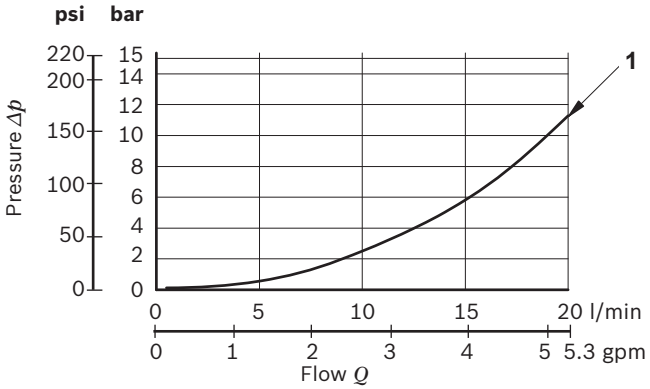

Flow path	Curve no.
P1 > C1	1
P1 > C2	1

Measured with hydraulic fluid ISO-VG32 at 45° ±5 °C (113° ±9 °F); ambient temperature 20 °C (68 °F).

Performance limits

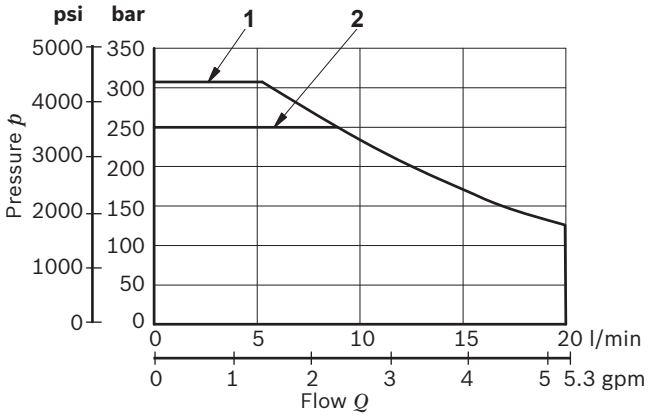

Drain type	Curve No.
External (-E-)	1
Internal (-I-)	2

3

External dimensions and fittings

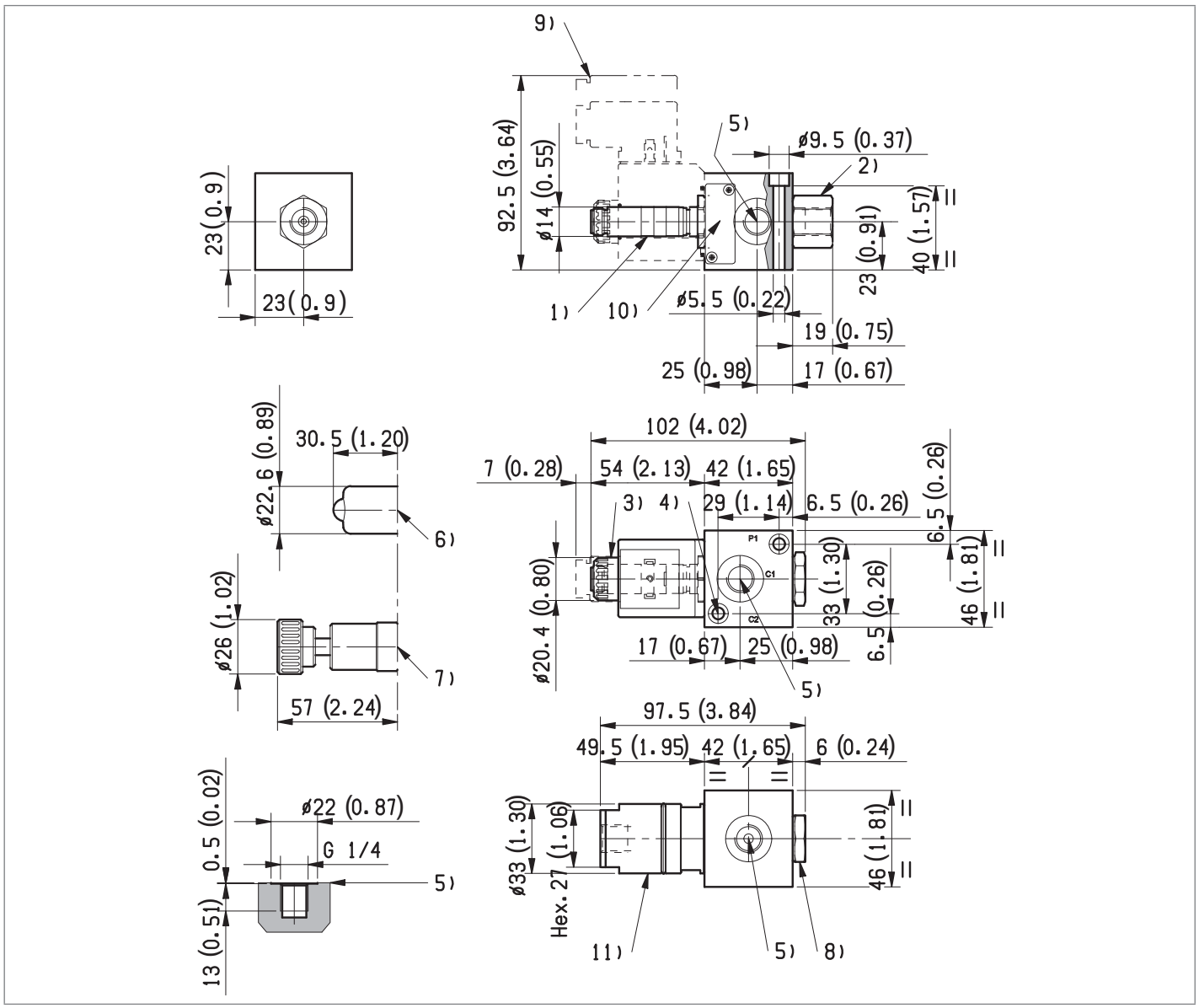

1 Solenoid tube Ø 14 mm (0.55 inch).
2 Plug for version with external drain.
3 Ring nut for coil locking Ø 20,4 mm (8 inch).
Torque 3 – 4 Nm (2.2 – 3.0 ft-lb).
4 Two through holes for installation. Recommended screws M5 with strength class DIN 8.8. Torque 5-6Nm(3.6-4.4 ft-lb).
5 Ports P, C1, C2, External drain, hydraulic/pneumatic pilot port G 1/4.
6 Optional push-button type manual override for spool opening: it is pressure stuck to the ring nut 5-6Nm (3.7-4.4 ft-lb) for coil locking. Mat no. R933000042.
7 Optional screw type manual override for spool opening: it is screwed torque 6-7Nm (4.4-5.2 ft-lb) to the tube as replacement of the coil ring nut. Mat no. R933000021.
8 Plug for version with internal drain.
9 Minimum clearance needed for connector removal.
10 Identification label.
11 Hydraulic, or pneumatic pilot connector.

Electric connection

00

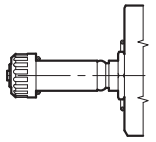

01

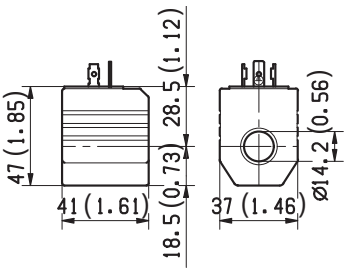

03 Protection class: IP 65 with female connector properly fitted (see drawing).

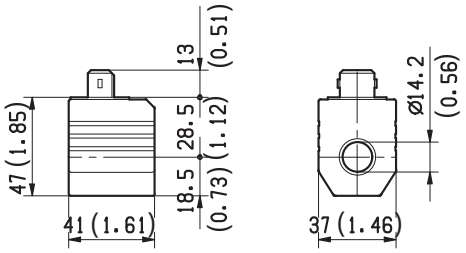

04 Protection class: IP 65 with female connector properly fitted (see drawing).

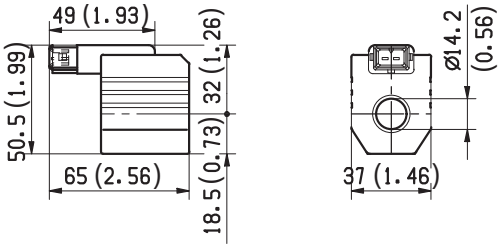

31

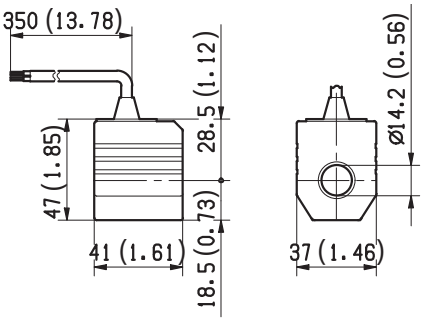

07 Protection class: IP 69 K with female connector properly fitted (see drawing).

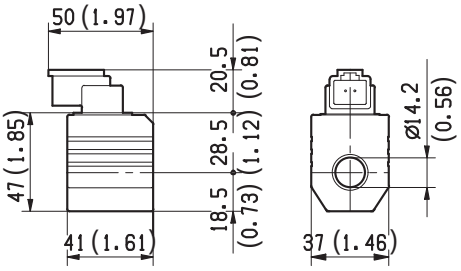

3/2 ways/positions flow diverters L705... (VS81-VS82-VS85)

Size 6
Series 00
Maximum operating pressure 310 bar (4500 psi)
Maximum flow 60 l/min (15.85 gpm)
Ports G 3/8 - G 1/2 - SAE8

General specifications

3 way 2 position valve.
Directional spool valve with direct solenoid control.
Hydraulic / pneumatic pilot, or manual push and twist control available as option.
Control spool operated by solenoid, with easily removable coil fastened by a ring nut.
Wet pin tube for DC coil, with push rod for mechanical override in case of voltage shortage.
Unrestricted 360° orientation of DC coil.
Control spool held in normal position by return spring.
Optional manual override (push-button or screw type).
Connectors available: DIN 43650 – ISO 4400, AMP Junior, DT04-2P (Deutsch), Free leads.

Contents

Ordering details	2
Symbols	2
Functional description	3
Technical data	3
Characteristic curves	5
External dimensions and fittings	6
Electric connection	7

RE 18301-02/02.2015 Bosch Rexroth AG

Ordering details

01	02		03	04	05	06	07	08	
L	**7**	**05**							**0**

Family

01	Compact directional valve	**L**

Type

02	Flow diverters	**7**

Ports

03	G3/8 DIN 3852	**3**
	G1/2 DIN 3852	**4**
	3/4-16 UNF-2B (SAE8)	**C**

Control type

04	Solenoid (coil C48) without manual override	**11**
	Solenoid (coil C48) with push-button type manual override	**1P**
	Solenoid (coil C48) with screw type manual override	**1F**
	Hydraulic / pneumatic control [1]	**P1**
	Manual push and twist control	**H1**

Spool variants

05	3 way / 2 position	**3_**

Drain type

06	Internal drain	**I**
	External drain	**E**

Voltage supply		**31**	**07**	**03**	**01**	**00**	
07	Manual push and twist control	–	–	–	–	–	**SG**
	Without coil	–	–	–	–	●	**00**
	12 V DC	●	●	●	●	–	**OB**
	13 V DC	–	●	–	●	–	**AD**
	24 V DC	●	●	●	●	–	**OC**
	27 V DC	–	●	–	●	–	**AC**
	48 V DC	–	–	–	●	–	**OD**

Electric connections

08	Without coils	**00**
	With coils, without mating connector DIN EN 175301-803 [2]	**01**
	With coils, with bi-directional diode, without mating connector vertical Amp-Junior	**03**
	With coils, with bi-directional diode, without mating connector DT04-2P	**07**
	With coils and bipolar sheathed lead 350mm (13,8 in) long	**31**

● = Available – = Not available

Symbols

Drain type I

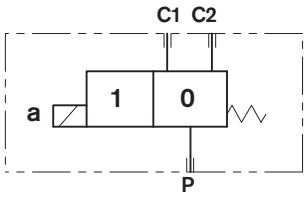

Drain type E

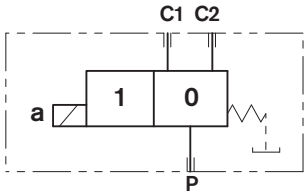

Spool variants

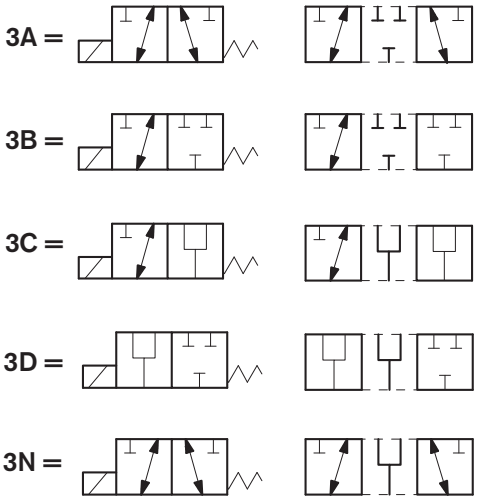

1) Minimum pressure 4 bar (58psi) with external drain (E), maximum pressure 200 bar (2901psi). With internal drain (I), at the minimum pressure (4 bar - 58psi), add the working pressure with ratio of 6,5:1. Example: With working pressure 100 bar (1450psi), minimum pilot pressure is 19.38 bar (281psi) ((100:6,5) + 4 bar (58psi)).

2) For connectors ordering code see data sheet RE 18325-90.

Functional description

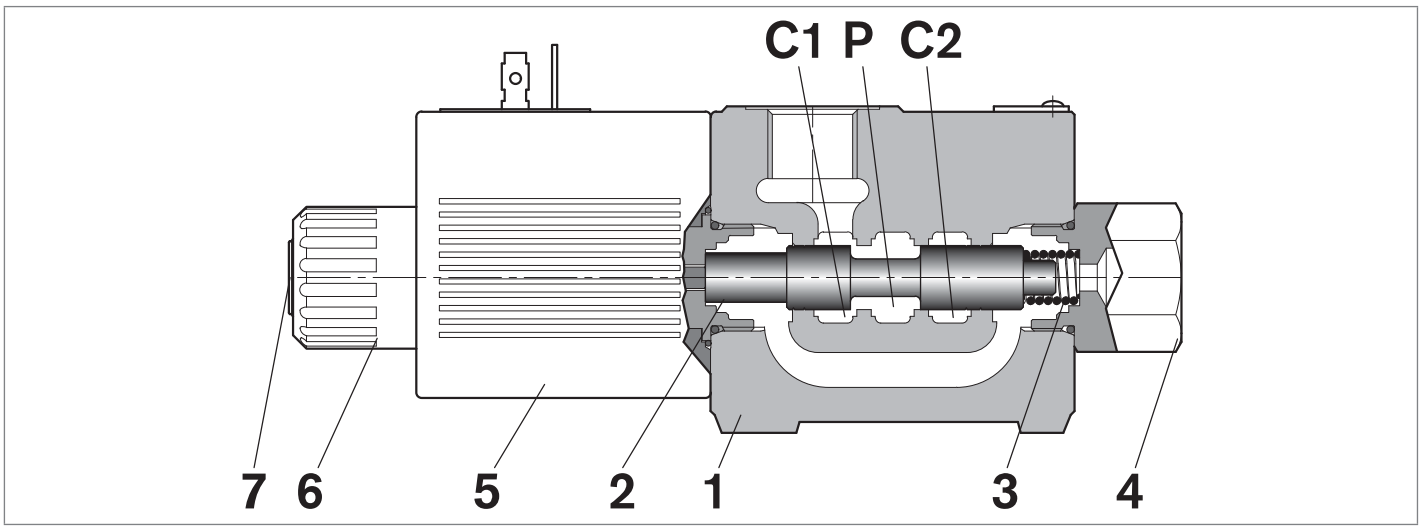

A valve basically consists of a housing (**1**), a control spool (**2**), a return spring (**3**) and a solenoid (**5**). It is designed to select which one of two circuits (**C1** or **C2**) is to be supplied with the oil delivered from one single hose (**P**): with spool in position "**0**", when the solenoid is de-energized, the flow goes from **P** to **C1**, with spool in position "**1**", when the solenoid is energized the flow goes from **P** to **C2**.
With the coil de-energized, the return spring (**3**) pushes back the spool (**2**) and holds it in position "**0**".
The coil (**5**) is fastened to the tube by the ring nut (**6**).
The manual override (**7**) allows to shift the spool (**2**) also in case of voltage shortage.
An external drain, to be connected to tank, ensures shifting operations also at higher working pressure.
Hydraulic / pneumatic pilot control, or manual push and twist control for spool shifting are available upon request.

Technical data

General		
Valve weight	kg (lbs)	2.06 (4.54)
Ambient Temperature	°C (°F)	–20....+50 (-4....+122) (NBR seals)
Hydraulic		
Maximum pressure with external drain ("E" type)	bar (psi)	310 (4500)
Maximum pressure with internal drain ("I" type)	bar (psi)	250 (3625)
Maximum flow	l/min (gpm)	60 (15.85)
Hydraulic fluid General properties: it must have physical lubricating and chemical properties suitable for use in hydraulic systems such as, for example:		Mineral oil based hydraulic fluids HL (DIN 51524 part 1). Mineral oil based hydraulic fluids HLP (DIN 51524 part 2). For use of environmentally acceptable fluids (vegetable or polyglycol base) please consult us.
Fluid Temperature	°C (°F)	–20....+80 (-4....+176) (NBR seals)
Permissible degree of fluid contamination		ISO 4572: $\beta_x \geq 75$ X = 12...15 ISO 4406: class 20/18/15 NAS 1638: class 9
Viscosity range	mm^2/s	5....420

Internal leakage with 100 bar (1450 psi) secondary pressure at C	cc/min (in^3/min)	min.10 (0.61) max. 20 (1.2)				
Electrical						
Voltage type		DC				
Voltage tolerance (nominal voltage)	%	-10 .... +10				
Duty		Continuous, with ambient temperature ≤ 50°C (122°F)				
Coil wire temperature not to be exceeded	°C (°F)	150 (302)				
Insulation class		H				
Compliance with		Low Voltage Directive LVD 73/23/EC (2006/95/EC), 2004/108/EC				
Coil weight with DIN 43650 – ISO 4400 connector	kg (lbs)	0.215 (0.44)				
Voltage	V	12	13	24	27	48
Voltage type		DC	DC	DC	DC	DC
Power consumption	W	36	36	36	36	36
Current (nominal at 20 °C (68 °F))	A	3.0	2.77	1.53	1.32	0.75
Resistance (nominal at 20 °C (68 °F))	Ω	3.97	4.68	15.67	20.42	63.60

Note
For applications with different specifications consult us

	Voltage [V]	Connector type	Coil description	Marking	Coil Mat no.
OB 01	12 DC	EN 175301-803 (Ex. DIN 43650)	C4801 12DC	12 DC	R933000063
OB 03	12 DC	AMP JUNIOR	C4803 12DC	12 DC	R933000065
OB 07	12 DC	DEUTSCH DT 04-2P	C4807 12DC	12 DC	R933000068
OB 31	12 DC	Cable 350 mm long	C4831 12DC	12 DC	R933000064
AD 01	13 DC	EN 175301-803 (Ex. DIN 43650)	C4801 13DC	13 DC	R933000069
AD 07	13 DC	DEUTSCH DT 04-2P	C4807 13DC	13 DC	R933000073
OC 01	24 DC	EN 175301-803 (Ex. DIN 43650)	C4801 24DC	24 DC	R933000076
OC 03	24 DC	AMP JUNIOR	C4803 24DC	24 DC	R933000071
OC 07	24 DC	DEUTSCH DT 04-2P	C4807 24DC	24 DC	R933000075
OC 31	24 DC	Cable 350 mm long	C4831 24DC	24 DC	R933000070
AC 01	27 DC	EN 175301-803 (Ex. DIN 43650)	C4801 27DC	27 DC	R933000077
AC 07	27 DC	DEUTSCH DT 04-2P	C4807 27DC	27 DC	R933000074
OD 01	48 DC	EN 175301-803 (Ex. DIN 43650)	C4801 48DC	48 DC	R933000078

Characteristic curves

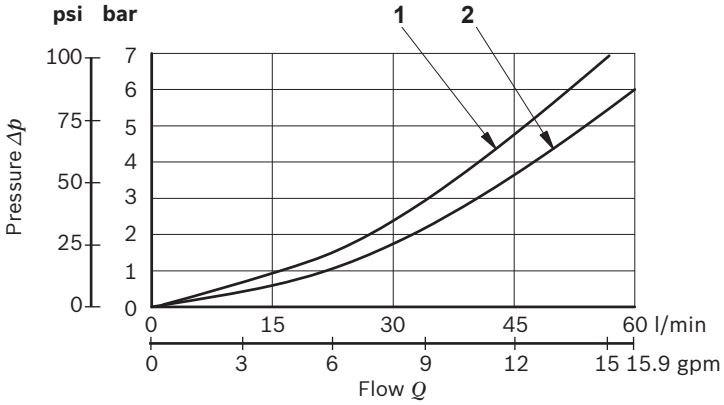

Model	Curve no.
VS 81	1
VS 82/85	2

Measured with hydraulic fluid ISO-VG32 at 45° ±5 °C (113° ±9 °F); ambient temperature 20 °C (68 °F).

DI-DE performance limits

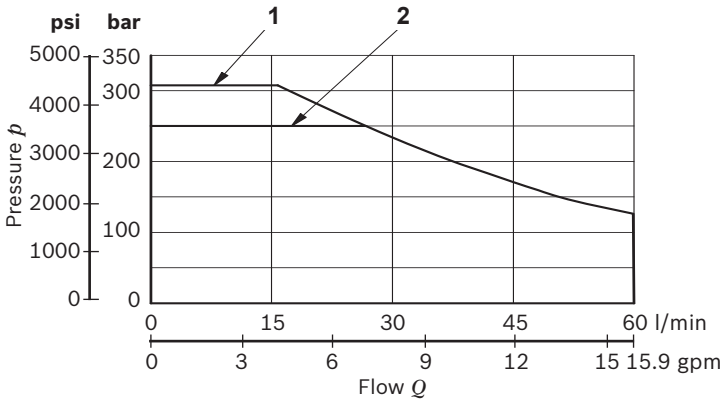

Drain type	Curve No.
External (-E-)	1
Internal (-I-)	2

3

External dimensions and fittings

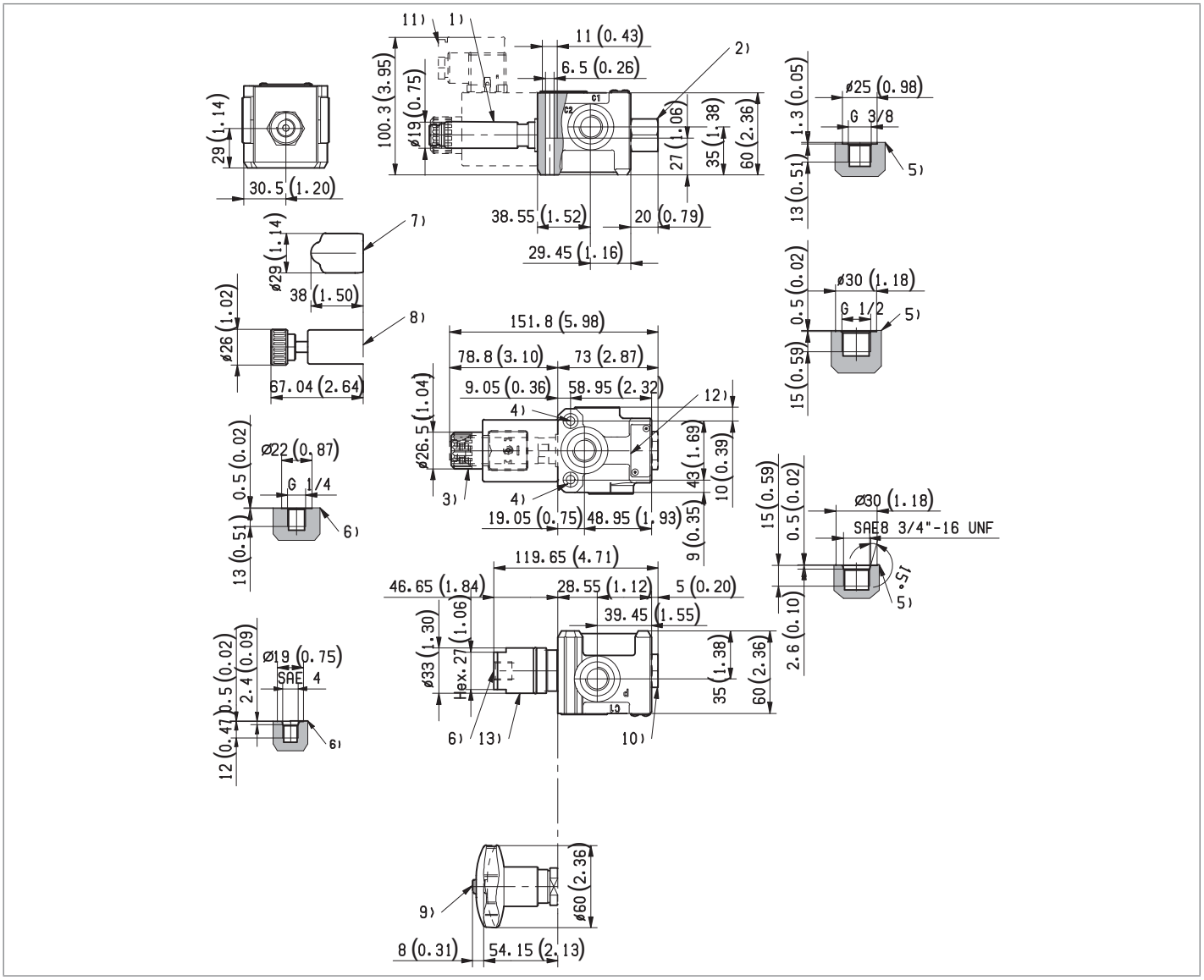

1 Solenoid tube Ø 19 mm (0.75 inch).
2 Plug for version with external drain.
3 Ring nut for coil locking Ø 26.5 mm (1.04 inch).
Torque 5-6Nm (3.6-4.4 ft-lb).
4 Two through holes for installation.
Recommended screws M6 with strength class DIN 8.8.
Torque 9-10 Nm (6.6-7.4 ft-lb).
5 Ports P, C1, C2: G 3/8, G 1/2, SAE 8.
6 External drain and hydraulic, or pneumatic pilot port G 1/4, SAE 4.
7 Optional push-button type manual override for spool opening: it is pressure stuck to the ring nut for coil locking.
Mat no. R933000043.
8 Optional screw type manual override for spool opening: it is screwed (torque 6-7Nm (4.4-5.2 ft-lb)) to the tube as replacement of the coil ring nut. Mat no. R933007215.
9 Dimensions of optional manual version, push and twist type.
10 Plug for version with internal drain.
11 Minimum clearance needed for connector removal.
12 Identification label.
13 Hydraulic, or pneumatic pilot connector.

Electric connection

00

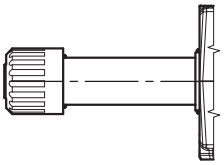

01

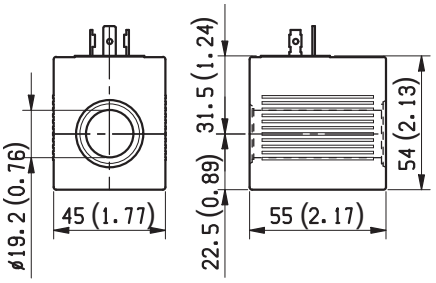

03 Protection class: IP 65 with female connector properly fitted (see drawing).

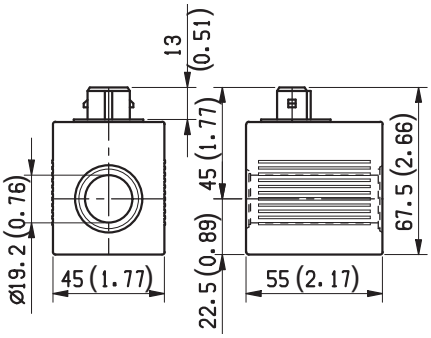

07 Protection class: IP 69 K with female connector properly fitted (see drawing).

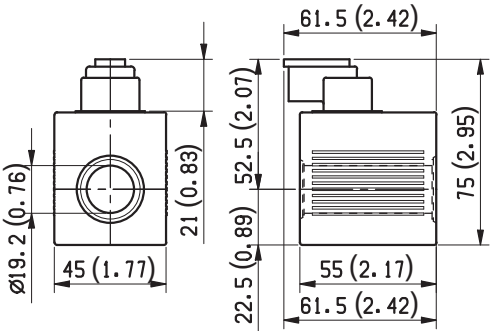

31

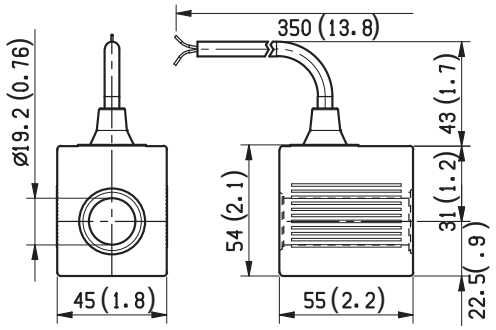

3

3/2 ways/positions flow diverters L706... (VS91-VS92-VS95)

Size 12
Series 00
Maximum operating pressure 310 bar (4500 psi)
Maximum flow 140 l/min (36.98 gpm)
Ports G 1/2 - G 3/4 - SAE12

General specifications

3 way 2 position valve.
Directional spool valve with direct solenoid control.
Hydraulic / pneumatic pilot , or manual push and twist control available as option.
Control spool operated by solenoid, with easily removable coil fastened by a ring nut.
Wet pin tube for DC coil, with push rod for mechanical override in case of voltage shortage.
Unrestricted 360° orientation of DC coil.
Control spool held in normal position by return spring.
Optional manual override (push-button or screw type).
Connectors available: DIN 43650 – ISO 4400, AMP Junior, DT04-2P (Deutsch), Free leads.

Contents

Ordering details	2
Symbols	2
Functional description	3
Technical data	3
Characteristic curves	5
External dimensions and fittings	6
Electric connection	8

RE 18301-03/04.2015 Bosch Rexroth AG

Ordering details

01	02		03	04	05	06	07	08	
L	**7**	**06**							**0**

Family

01	Compact directional valve	**L**

Type

02	Flow diverters	**7**

Ports

03	G1/2 DIN 3852	**4**
	G3/4 DIN 3852	**5**
	1 1/16”-12 UN-2B (SAE12)	**E**

Control type

04	Solenoid (coil C65) without manual override	**14**
	Solenoid (coil C65) with push-button type manual override	**4P**
	Solenoid (coil C65) with screw type manual override zinc plated screw	**4F**
	Solenoid (coil C65) with screw type manual override with stainless steel screw	**4X**
	Hydraulic / pneumatic control [1]	**P1**
	Manual push and twist control	**H1**

Spool variants

05	3 way / 2 position	**3_**

Drain type

06	Internal drain	**I**
	External drain	**E**

Voltage supply		**31**	**07**	**03**	**01**	**00**	
07	Manual push and twist control	–	–	–	–	–	**SG**
	Without coil	–	–	–	–	●	**00**
	12 V DC	●	●	●	●	–	**OB**
	13 V DC	–	●	–	●	–	**AD**
	24 V DC	●	●	●	●	–	**OC**
	27 V DC	–	●	–	●	–	**AC**
	48 V DC	–	–	–	●	–	**OD**

Electric connections

08	Without coils	**00**
	With coils, without mating connector DIN EN 175301-803 [2]	**01**
	With coils, with bi-directional diode, without mating connector vertical Amp-Junior	**03**
	With coils, with bi-directional diode, without mating connector DT04-2P	**07**
	With coils and bipolar sheathed lead 350mm (13,8 in) long	**31**

● = Available – = Not available

Symbols

Drain type I

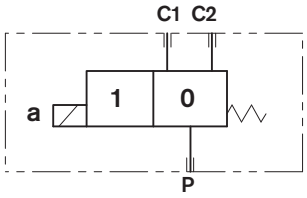

Drain type E

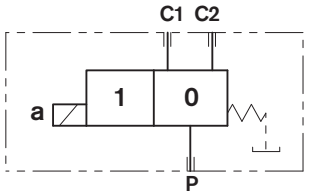

Spool variants

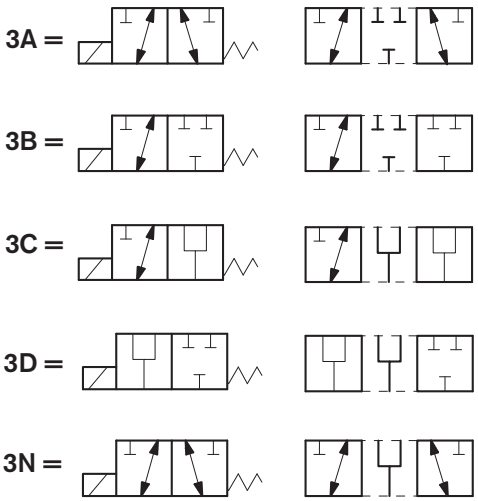

1) Minimum pressure 4 bar (58psi) with external drain (E), maximum pressure 200 bar (2901psi). With internal drain (I), at the minimum pressure (4 bar - 58psi), add the working pressure with ratio of 11:1. Example: With working pressure 100 bar (1450psi), minimum pilot pressure is 13.09 bar (190psi) ((100:11) + 4 bar (58psi)).

2) For connectors ordering code see data sheet RE 18325-90.

Functional description

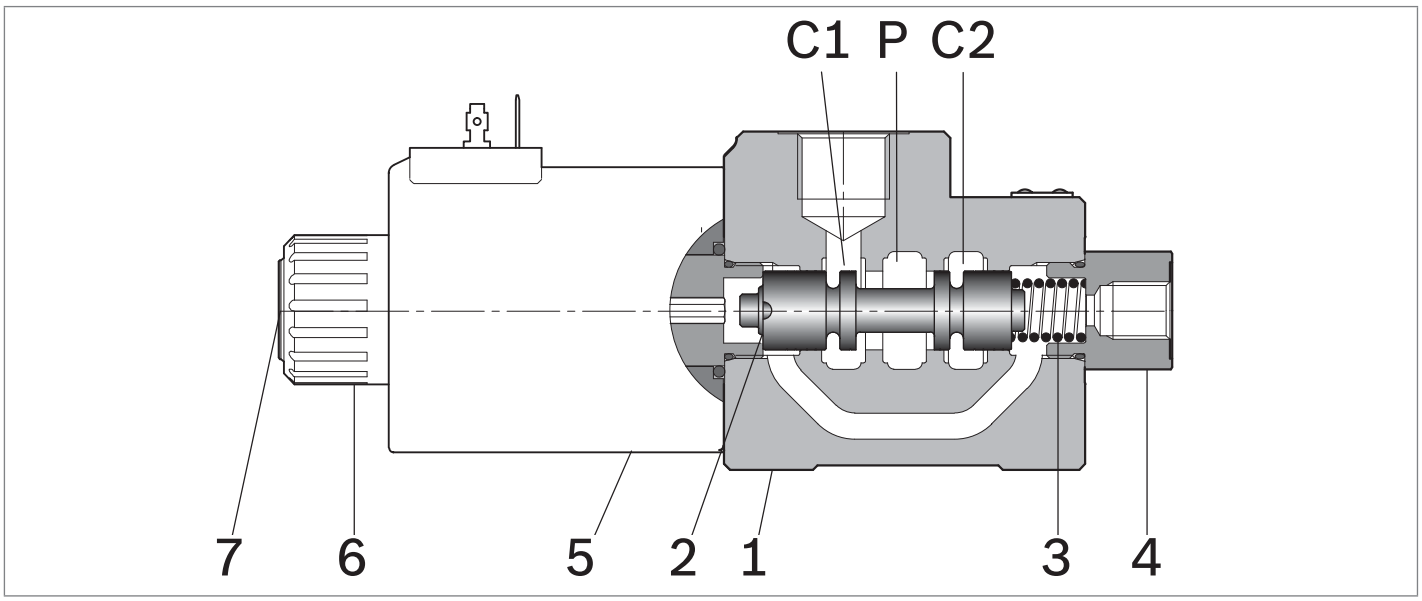

A valve basically consists of a housing (**1**), a control spool (**2**), a return spring (**3**) and a solenoid (**5**). It is designed to select which one of two circuits (**C1** or **C2**) is to be supplied with the oil delivered from one single hose (**P**): with spool in position "**0**", when the solenoid is de-energized, the flow goes from **P** to **C1**, with spool in position "**1**", when the solenoid is energized the flow goes from **P** to **C2**.

With the coil de-energized, the return spring (**3**) pushes back the spool (**2**) and holds it in position "**0**".

The coil (**5**) is fastened to the tube by the ring nut (**6**).

The manual override (**7**) allows to shift the spool (**2**) also in case of voltage shortage.

An external drain, to be connected to tank, ensures shifting operations also at higher working pressure.

Hydraulic / pneumatic pilot control, or manual push and twist control for spool shifting are available upon request.

Technical data

General		
Valve weight	kg (lbs)	3.8 (8.4)
Ambient Temperature	°C (°F)	–20....+50 (-4....+122) (NBR seals)
Hydraulic		
Maximum pressure with external drain ("E" type)	bar (psi)	310 (4500)
Maximum pressure with internal drain ("I" type)	bar (psi)	250 (3625)
Maximum flow	l/min (gpm)	140 (36.98)
Hydraulic fluid General properties: it must have physical lubricating and chemical properties suitable for use in hydraulic systems such as, for example:		Mineral oil based hydraulic fluids HL (DIN 51524 part 1). Mineral oil based hydraulic fluids HLP (DIN 51524 part 2). For use of environmentally acceptable fluids (vegetable or polyglycol base) please consult us.
Fluid Temperature	°C (°F)	–20....+80 (-4....+176) (NBR seals)
Permissible degree of fluid contamination		ISO 4572: $\beta_x \geq 75$ X = 12...15 ISO 4406: class 20/18/15 NAS 1638: class 9
Viscosity range	mm^2/s	5....420
Internal leakage with 100 bar (1450 psi) secondary pressure at C	cc/min (in^3/min)	min.15 (0.9) max. 40 (2.4)

Electrical						
Voltage type		DC				
Voltage tolerance (nominal voltage)	%	-10 .... +10				
Duty		Continuous, with ambient temperature ≤ 50°C (122°F)				
Coil wire temperature not to be exceeded	°C (°F)	150 (302)				
Insulation class		H				
Compliance with		Low Voltage Directive LVD 73/23/EC (2006/95/EC), 2004/108/EC				
Coil weight with DIN 43650 – ISO 4400 connector	kg (lbs)	1.05 (2.3)				
Voltage	V	12	13	24	27	48
Voltage type		DC	DC	DC	DC	DC
Power consumption	W	44	44	44	44	44
Current (nominal at 20 °C (68 °F))	A	3.6	3.4	1.8	1.6	0.9
Resistance (nominal at 20 °C (68 °F))	Ω	3.2	3.6	12.8	16.9	50.5

Note
For applications with different specifications consult us

	Voltage [V]	**Connector type**	**Coil description**	**Marking**	**Coil Mat no.**
OB 01	12 DC	EN 175301-803 (Ex. DIN 43650)	C6501 12DC	12 DC	R933000100
OB 03	12 DC	AMP JUNIOR	C6503 12DC	12 DC	R933000119
OB 07	12 DC	DEUTSCH DT 04-2P	C6507 12DC	12 DC	R933000107
OB 31	12 DC	Cable 350 mm long	C6531 12DC	12 DC	R933000104
AD 01	13 DC	EN 175301-803 (Ex. DIN 43650)	C6501 13DC	13 DC	R933000101
AD 07	13 DC	DEUTSCH DT 04-2P	C6507 13DC	13 DC	R933000112
OC 01	24 DC	EN 175301-803 (Ex. DIN 43650)	C6501 24DC	24 DC	R933000102
OC 03	24 DC	AMP JUNIOR	C6503 24DC	24 DC	R933000120
OC 07	24 DC	DEUTSCH DT 04-2P	C6507 24DC	24 DC	R933000111
OC 31	24 DC	Cable 350 mm long	C6531 24DC	24 DC	R933000110
AC 01	27 DC	EN 175301-803 (Ex. DIN 43650)	C6501 27DC	27 DC	R933000103
AC 03	27 DC	AMP JUNIOR	C6503 27DC	27 DC	R93307055
AC 07	27 DC	DEUTSCH DT 04-2P	C6507 27DC	27 DC	R933000113
OD 01	48 DC	EN 175301-803 (Ex. DIN 43650)	C6501 48DC	48 DC	R933000114

Characteristic curves

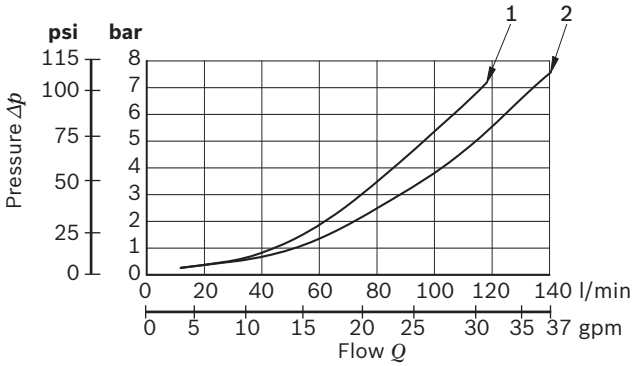

Model	Curve no.
VS 91	1
VS 92/95	2

Measured with hydraulic fluid ISO-VG32 at 45° ±5 °C (113° ±9 °F); ambient temperature 20 °C (68 °F).

DI performance limits

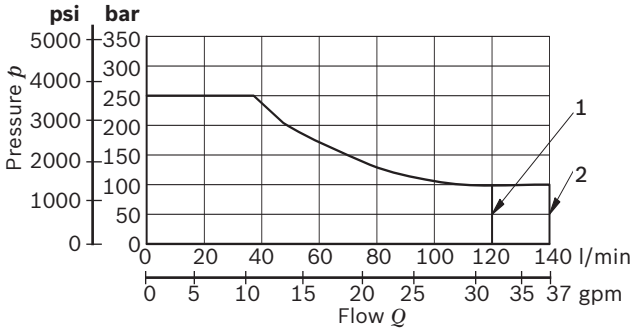

Model	Curve no.
VS 91	1
VS 92/95	2

DE performance limits

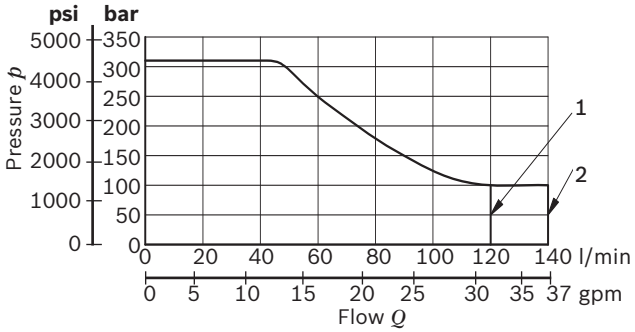

Model	Curve no.
VS 91	1
VS 92/95	2

External dimensions and fittings

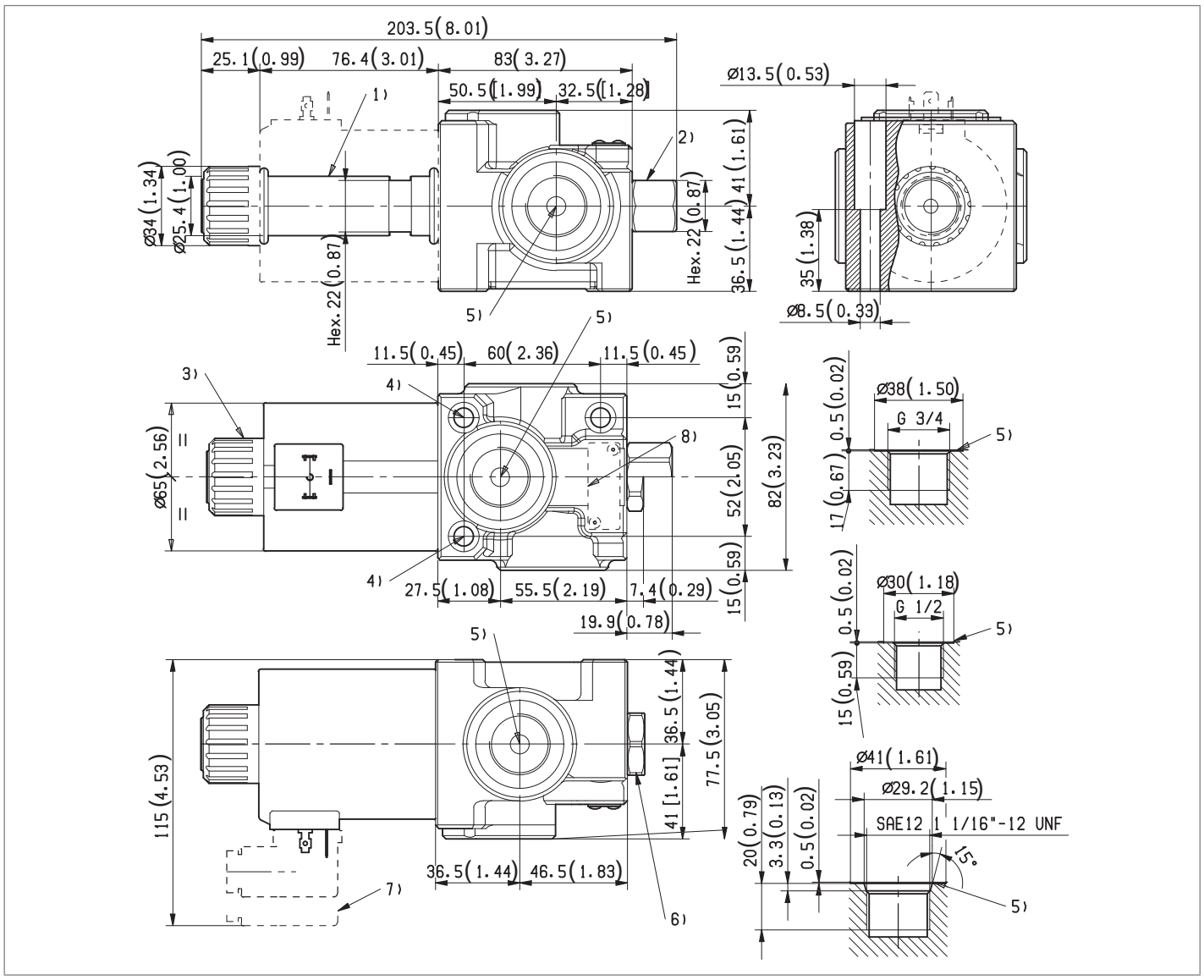

1 Solenoid tube Ø 25,4 mm (1.00 inch).
2 Plug for version with external drain.
3 Ring nut for coil locking Ø 34 mm (1.35 inch).
Torque 7-8 Nm (5.2-5.9 ft-lb).
4 Two through holes for installation. Recommended screws M8 with strength class DIN 8.8.
Torque 15-16 Nm (11-11.8 ft-lb).
5 Ports P, C1, C2: G 1/2, G 3/4, SAE 12.
6 External drain plug hex 27 mm.
7 Minimum clearance needed for connector removal.
8 Identification label.

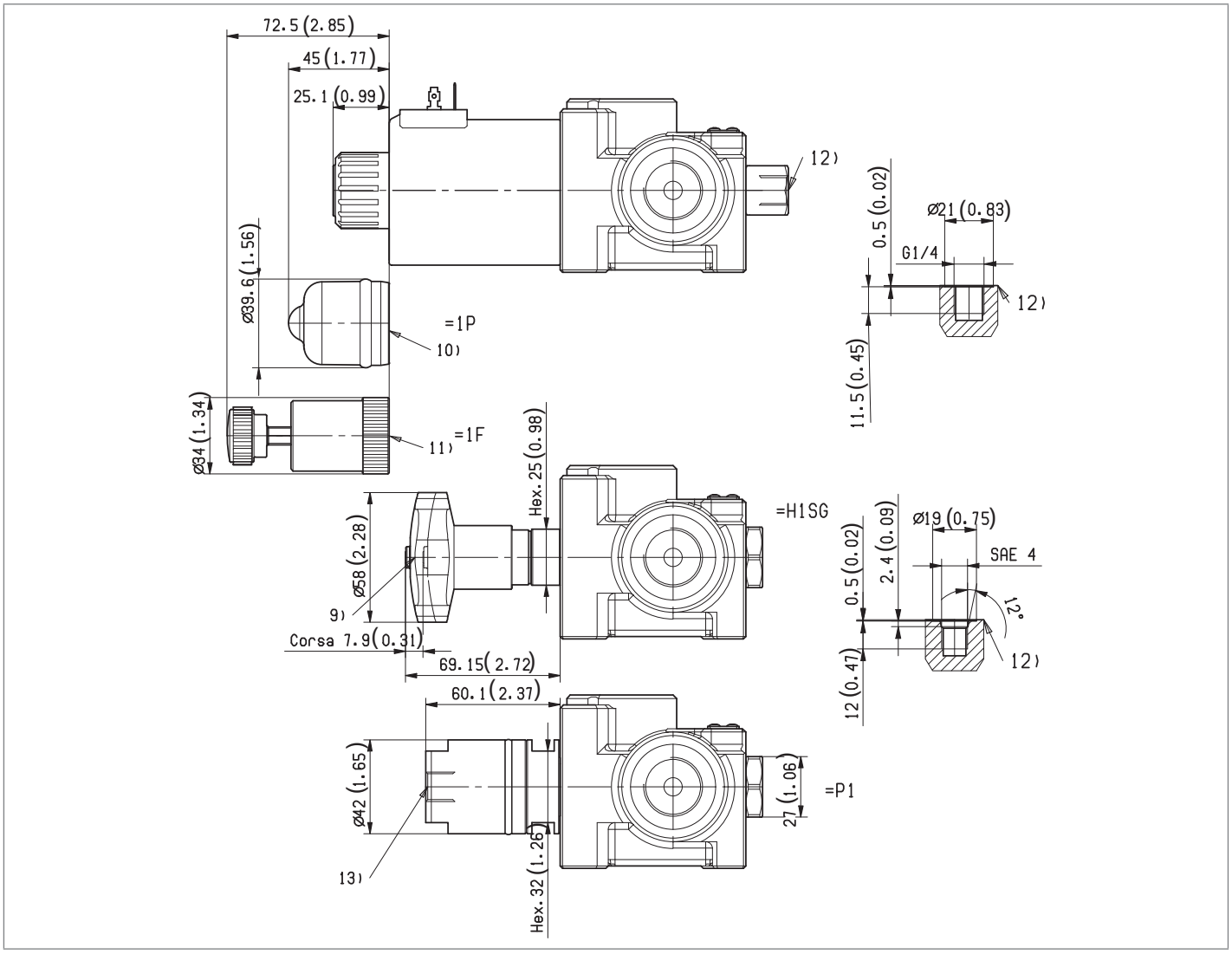

9 Optional manual version, push and twist type.
10 Optional push-button type manual override for spool opening: it is pressure stuck to the ring nut for coil locking.
Mat no. R933003424
11 Optional screw type manual override, 4F or 4X types, for spool opening: it is screwed (torque 8-9 Nm (5.9-6.6 ft-lb)) to the tube as replacement of the coil ring nut. Mat no. R933003713 zinc plated, Mat no. R933009577 stainless steel
12 External drain port G 1/4, SAE 4.
13 Optional hydraulic / pneumatic piloted version.
Pilot port plug available with G 1/4 or SAE4.

Dimensions [mm (inches)]

Electric connection

00

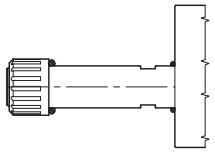

01

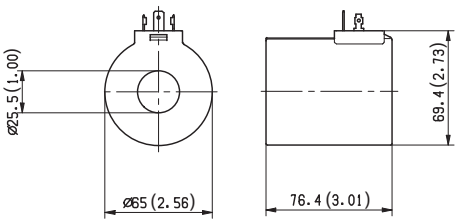

03 Protection class: IP 65 with female connector properly fitted (see drawing).

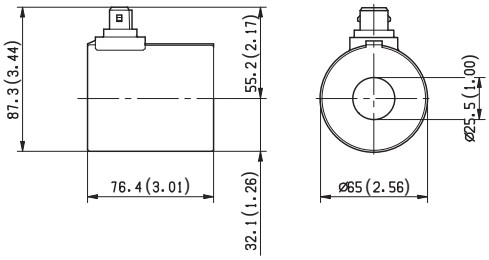

07 Protection class: IP 69 K with female connector properly fitted (see drawing).

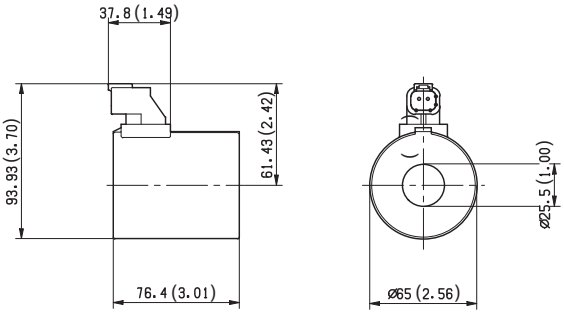

31

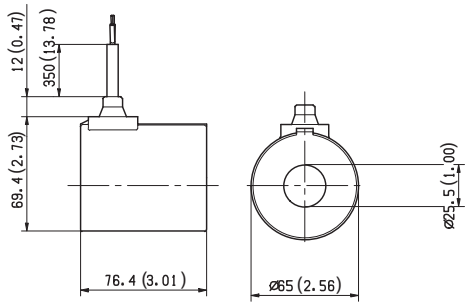

Flow diverters
6/2 ways/positions

Designation	Description	Ports/Size	Code	Data sheet	Page
6/2 ways/positions flow diverters	VS120, VS125, VS129	G 1/4, SAE 4, JIS B 1/4 / Size 4	L710_	18302-04	799
6/2 ways/positions flow diverters	VS151, VS152, VS155	G 3/8, G 1/2, SAE 8 / Size 6	L721_	18302-05	807
6/2 ways/positions flow diverters with ports C1, C2, C3 and C4 single side	VS161, VS165	G 3/8, SAE 8 / Size 6	L725_	18302-06	815
6/2 ways/positions flow diverters	VS311, VS312, VS315	G 1/2, G 3/4, SAE 12 / Size 10	L753_	18302-07	823
6/2 ways/positions piloted flow diverters – Size 16	VS400	G 1 / Size 16	L755	18302-11	831

6/2 ways/positions flow diverters L710... (VS120-VS125-VS129)

Size 4
Series 00
Maximum operating pressure 310 bar (4500 psi)
Maximum flow 25 l/min (6.6 gpm)
Ports G 1/4 - SAE4 - JIS B 1/4

General specifications

6 way 2 position valve.
Directional spool valve with direct solenoid control.
Hydraulic / pneumatic pilot available as option.
Control spool operated by solenoid, with easily removable coil fastened by a ring nut.
Wet pin tube for DC coil, with push rod for mechanical override in case of voltage shortage.
Unrestricted 360° orientation of DC coil.
Control spool held in normal position by return spring.
Optional manual override (push-button or screw type).
Connectors available: DIN 43650 – ISO 4400, AMP Junior, DT04-2P (Deutsch), Free leads.

Contents

Ordering details	2
Symbols	2
Functional description	3
Technical data	3
Characteristic curve	5
External dimensions and fittings	6
Electric connection	8

RE 18301-04/02.2012 Bosch Rexroth AG

Ordering details

01	02		03	04	05	06	07	08	
L	**7**	**10**							**0**

Family

01	Compact directional valve	**L**

Type

02	Flow diverters	**7**

Ports

03	G 1/4 DIN 3852	**2**
	7/16-20 UNF(SAE4)	**A**
	JIS B G 1/4	**J**

Control type

04	Solenoid (coil C36) without manual override	**10**
	Solenoid (coil C36) with push-button type manual override	**1P**
	Solenoid (coil C36) with screw type manual override	**1F**
	Hydraulic / pneumatic control [1]	**P1**

Spool variants

05	6 way / 2 position P1 side	**6_**
	6 way / 2 position P2 side	**7_**

Drain type		**6A**	**7A**	**6C**	**7C**	**6E**	**7E**	
06	Internal drain	●	●	●	●	–	–	**I**
	External drain	●	●	●	●	●	●	**E**

Voltage supply		**31**	**07**	**04**	**03**	**01**	**00**	
07	Without coil	–	–	–	–	–	●	**00**
	12 V DC	●	●	●	●	●	–	**OB**
	13 V DC	–	●	–	–	●	–	**AD**
	24 V DC	●	●	●	●	●	–	**OC**
	27 V DC	–	●	–	–	●	–	**AC**
	48 V DC	–	–	●	–	●	–	**OD**
	110 V DC	–	–	–	–	●	–	**OE**

Electric connections

08	Without coils	**00**
	With coils, without mating connector DIN EN 175301-803 [2]	**01**
	With coils, with bi-directional diode, without mating connector vertical Amp-Junior	**03**
	With coils, with bi-directional diode, without mating connector horizontal Amp-Junior	**04**
	With coils, with bi-directional diode, without mating connector DT04-2P	**07**
	With coils and bipolar sheathed lead 350mm (13,8 in) long	**31**

● = Available – = Not available

Symbols

Drain type I

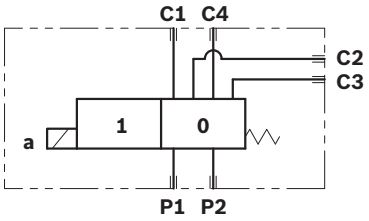

Drain type E

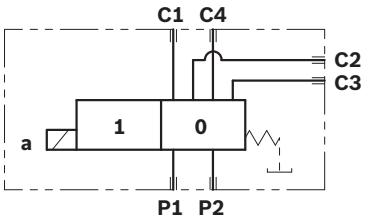

Spool variants

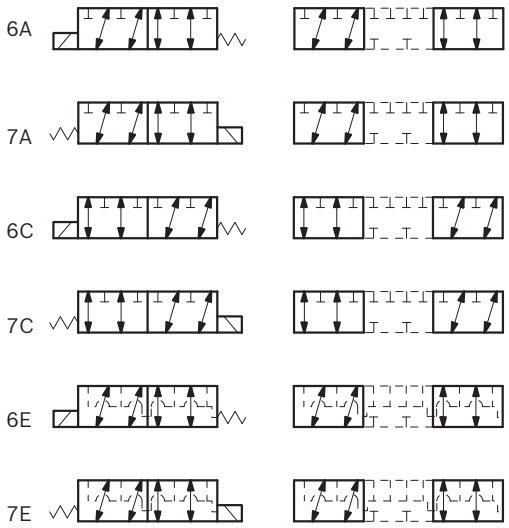

1) Minimum pressure 4 bar (58psi) with external drain (E), maximum pressure 200 bar (2901psi). With internal drain (I), at the minimum pressure (4 bar - 58psi), add the working pressure with ratio of 6,5:1. Example: With working pressure 100 bar (1450psi), minimum pilot pressure is 19.38 bar (281psi) ((100:6,5) + 4 bar (58psi)).

2) For connectors ordering code see data sheet RE 18325-90.

Functional description

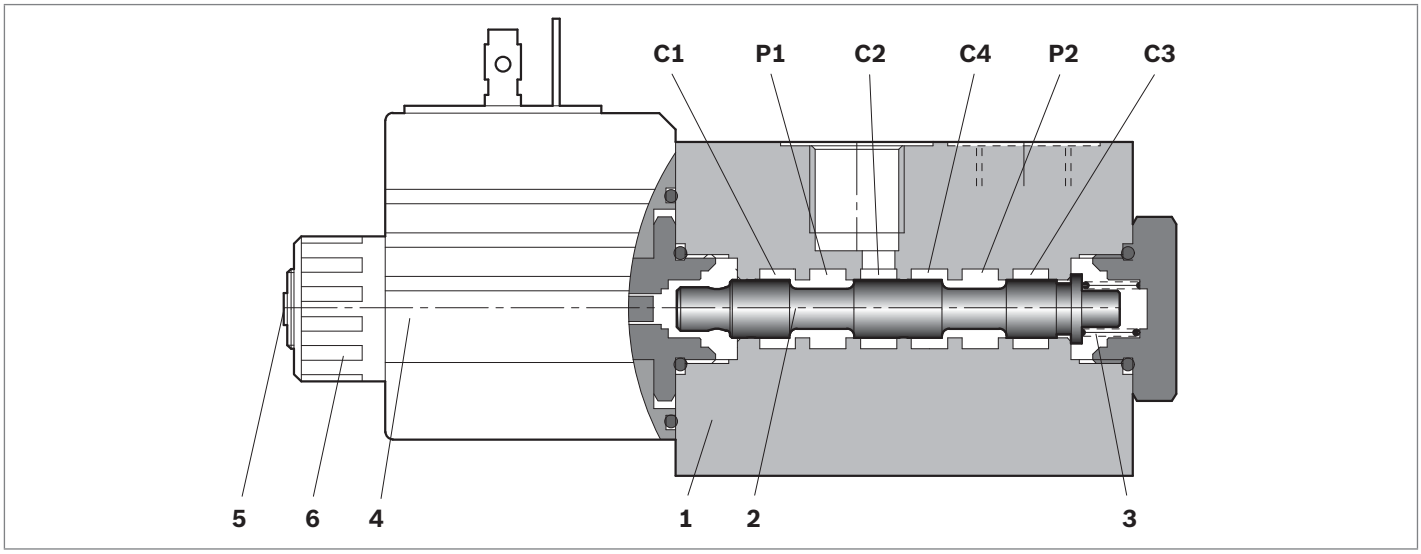

A valve basically consists of a housing (**1**), a control spool (2), a return spring (3) and a solenoid (**4**). It is designed to connect two inlet lines **P1** – **P2** (normally a set of hoses) and divert them to either the outlet ports (**C1** – **C4**) with spool in position “0”, when the solenoid is de-energized, or to the outlet ports (**C2** – **C3**) with spool in position “1”, when the solenoid is energized.

With the coil de-energized, the return spring (**3**) pushes back the spool (**2**) and holds it in position “0”.
The coil (**4**) is fastened to the tube by the ring nut (**6**).
The manual override (**6**) allows to shift the spool (**2**) also in case of voltage shortage.
Hydraulic / pneumatic pilot control for spool shifting is available upon request.

Technical data

General		
Valve weight	kg (lbs)	1.13 (2.5)
Mounting position		unrestricted
Ambient Temperature	°C (°F)	–20....+50 (-4....+122) (NBR seals)
Hydraulic		
Maximum pressure with external drain (“E” type)	bar (psi)	310 (4500)
Maximum pressure with internal drain (“I” type)	bar (psi)	250 (3625)
Maximum inlet flow	l/min (gpm)	25 (6.6)
Hydraulic fluid General properties: it must have physical lubricating and chemical properties suitable for use in hydraulic systems such as, for example:		Mineral oil based hydraulic fluids HL (DIN 51524 part 1). Mineral oil based hydraulic fluids HLP (DIN 51524 part 2). For use of environmentally acceptable fluids (vegetable or polyglycol base) please consult us.
Fluid Temperature	°C (°F)	–20....+80 (-4....+176) (NBR seals)
Permissible degree of fluid contamination		ISO 4572: $\beta_x \geq 75$ X = 12...15 ISO 4406: class 20/18/15 NAS 1638: class 9
Viscosity range	mm^2/s	5....420
Internal leakage with 100 bar (1450 psi) secondary pressure at C	cc/min (in^3/min)	min.7 (0.43) max. 15 (0.74)

Electrical							
Voltage type		DC					
Voltage tolerance (nominal voltage)	%	-10 .... +10					
Duty		Continuous, with ambient temperature ≤ 50°C (122°F)					
Coil wire temperature not to be exceeded	°C (°F)	150 (302)					
Insulation class		H					
Compliance with		Low Voltage Directive LVD 73/23/EC (2006/95/EC), 2004/108/EC					
Coil weight with connection EN 175301-803	kg (lbs)	0.215 (0.44)					
Voltage	V	12	13	24	27	48	110
Voltage type		DC	DC	DC	DC	DC	DC
Power consumption	W	26	26	26	26	26	26
Current (nominal at 20 °C (68 °F))	A	2.15	2.00	1.10	1.00	0.54	0.27
Resistance (nominal at 20 °C (68 °F))	Ω	5.5	6.5	22	28	89	413

Note
For applications with different specifications consult us

Code	Voltage [V]	Connector type	Coil description	Marking	Coil Mat no.
OB 01	12 DC	EN 175301- 803 (Ex. DIN 43650)	C3601 12DC	12 DC	R933000044
OB 03	12 DC	AMP JUNIOR	C3603 12DC	12 DC	R933000047
OB 04	12 DC	AMP JUNIOR Horizontal	C3604 12DC	12 DC	R933002913
OB 07	12 DC	DEUTSCH DT 04-2P	C3607 12DC	12 DC	R933000048
OB 31	12 DC	Cable 350 mm long	C3631 12DC	12 DC	R933000045
AD 01	13 DC	EN 175301-803 (Ex. DIN 43650)	C3601 13DC	13 DC	R933000051
AD 07	13 DC	DEUTSCH DT 04-2P	C3607 13DC	13 DC	R933000049
OC 01	24 DC	EN 175301-803 (Ex. DIN 43650)	C3601 24DC	24 DC	R933000053
OC 03	24 DC	AMP JUNIOR	C3603 24DC	24 DC	R933000057
OC 04	24 DC	AMP JUNIOR Horizontal	C3604 24DC	24 DC	R933002914
OC 07	24 DC	DEUTSCH DT 04-2P	C3607 24DC	24 DC	R933000058
OC 31	24 DC	Cable 350 mm long	C3637 24DC	24 DC	R933000055
AC 01	27 DC	EN 175301-803 (Ex. DIN 43650)	C3601 27DC	27 DC	R933000056
AC 07	27 DC	DEUTSCH DT 04-2P	C3607 27DC	27 DC	R933000050
OD 01	48 DC	EN 175301-803 (Ex. DIN 43650)	C3601 48DC	48 DC	R933000059
OD 04	48 DC	AMP JUNIOR Horizontal	C3604 48DC	48 DC	R933002915
OE 01	110 DC	EN 175301-803 (Ex. DIN 43650)	C3601 110DC	110 DC	R933000061

Characteristic curves

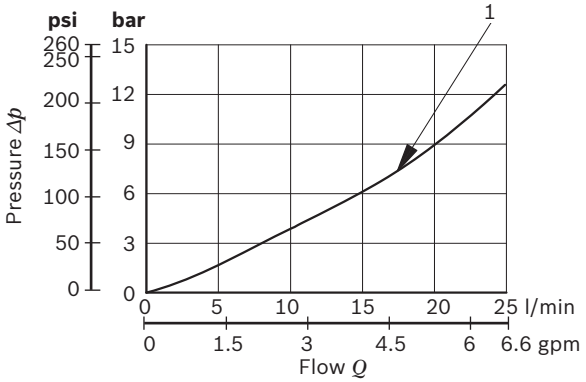

Flow path	Curve no.
P1 > C1	1
P1 > C2	1
P2 > C3	1
P2 > C4	1

Measured with hydraulic fluid ISO-VG32 at 45° ±5 °C (113° ±9 °F); ambient temperature 20 °C (68 °F).

DI-DE performance limits

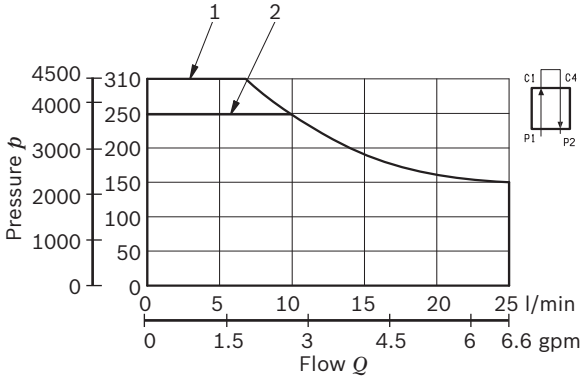

Drain type	Curve No.
External (-E-)	1
Internal (-I-)	2

Flow across both ways: forward across P1>C1 and reverse across C4>P2

External dimensions and fittings

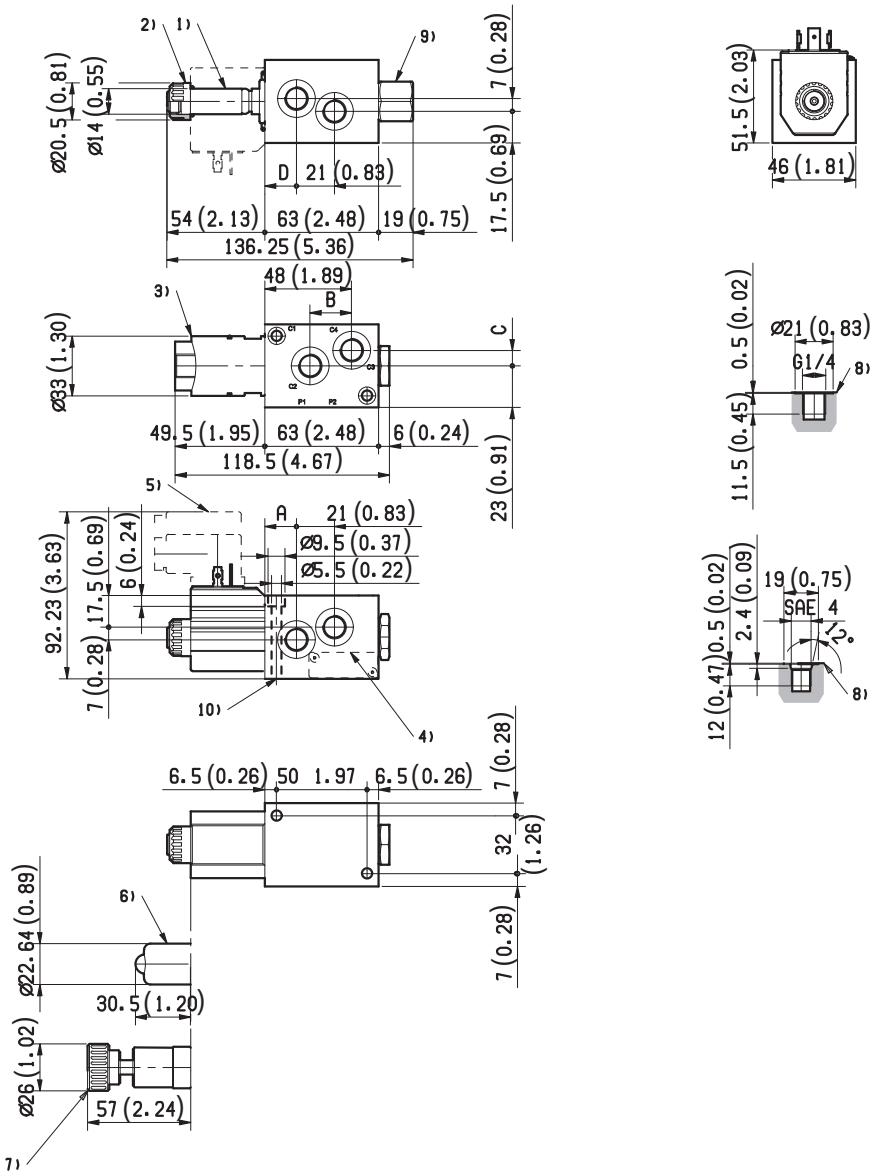

Measure	VS120 (G1/4)	VS125 (SAE 4)
A mm (inch)	17.5 (0.69)	16.5 (0.65)
B mm (inch)	23 (0.91)	22.5 (0.89)
C mm (inch)	8.5 (0.33)	7.5 (0.30)
D mm (inch)	17.5 (0.69)	18.5 (0.73)

1 Solenoid tube Ø 14 mm (0.55 inch).
2 Ring nut for coil locking Ø 20.5 mm (1.04 inch). Torque 3-4 Nm (2.2-3.0 ft-lb).
3 Optional hydraulic / pneumatic piloted version. Pilot port plug available with G 1/4.
4 Identification label.
5 Minimum clearance needed for connector removal.
6 Optional push-button, 1P type, manual override for spool opening: it is pressure stuck to the ring nut for coil locking. Mat no. R933000042.
7 Optional screw, 1F type, manual override for spool opening: it is screwed (torque 6-7 Nm (4.4-5.5 ft-lb)) to the tube as replacement of the coil ring nut. Mat no. R933000021.
8 Ports P1, P2, C1, C2, C3, C4.
9 External drain plug available with G 1/4 and SAE 4 port.
10 Two through holes, for installation use M5 screws with strength class DIN 8.8. Torque 5-6 Nm (3.6-4.4 ft-lb).

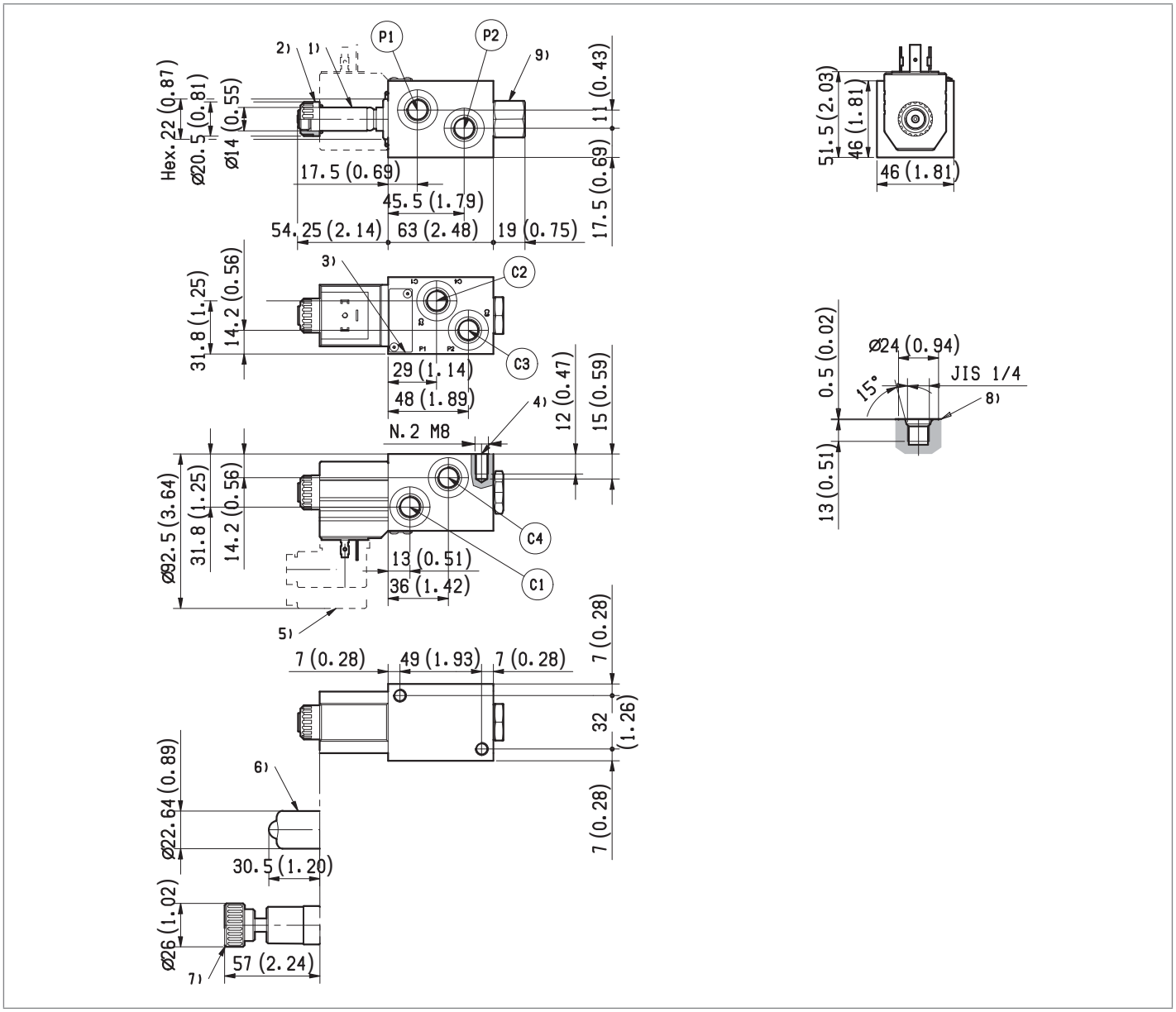

1 Solenoid tube Ø 14 mm (0.55 inch).
2 Ring nut for coil locking Ø 20.5 mm (1.04 inch).
Torque 3-4 Nm (2.2-3.0 ft-lb).
3 Identification label.
4 Two threaded holes for installation M8.
5 Minimum clearance needed for connector removal.
6 Optional push-button, 1P type, manual override for spool opening: it is pressure stuck to the ring nut for coil locking.
Mat no. R933000042 .
7 Optional screw, 1F type, manual override for spool opening: it is screwed (torque 6-7 Nm (4.4-5.5 ft-lb)) to the tube as replacement of the coil ring nut.
Mat no. R933000021.
8 Ports P1, P2, C1, C2, C3, C4.

Dimensions [mm (inches)]

Electric connection

00

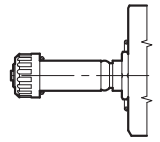

01

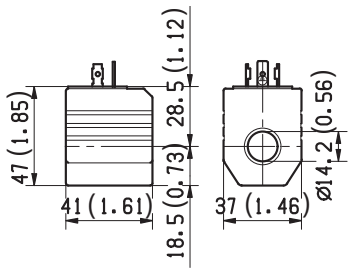

03 Protection class: IP 65 with female connector properly fitted (see drawing).

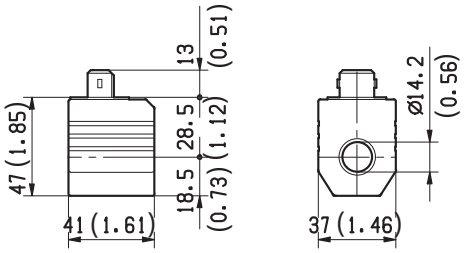

04 Protection class: IP 65 with female connector properly fitted (see drawing).

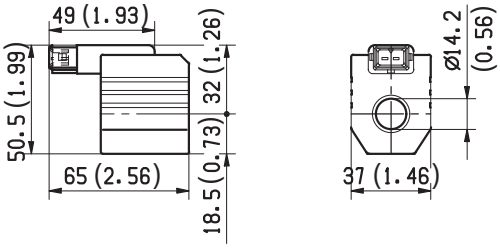

31

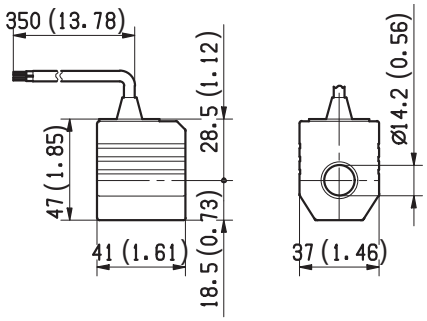

07 Protection class: IP 69 K with female connector properly fitted (see drawing).

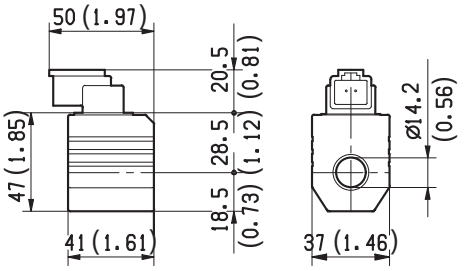

6/2 ways/positions flow diverters L721.... (VS151-VS152-VS155)

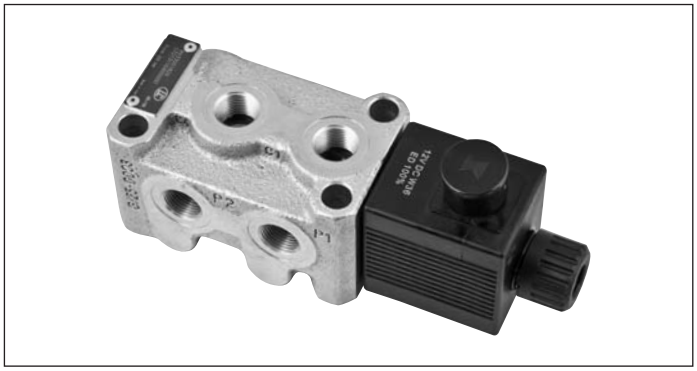

Size 6
Series 01
Maximum operating pressure 310 bar (4500 psi)
Maximum flow 60 l/min (15.85 gpm)
Ports G 3/8 - G 1/2 - SAE8

General specifications

6 way 2 position valve.
Directional spool valve with direct solenoid control.
Hydraulic / pneumatic pilot , or manual push and twist control available as option.
Usable as stand-alone, or as multiple stackable units.
Control spool operated by solenoid, with easily removable coil fastened by a ring nut.
Wet pin tube for DC coil, with push rod for mechanical override in case of voltage shortage.
Unrestricted 360° orientation of DC coil.
Control spool held in normal position by return spring.
Optional manual override (push-button or screw type).
Connectors available: DIN 43650 – ISO 4400, AMP Junior, DT04-2P (Deutsch), Free leads.

Contents

Ordering details	2
Symbols	2
Functional description	3
Technical data	3
Characteristic curves	5
External dimensions and fittings	6
Electric connection	8

RE 18301-05/02.2012 Bosch Rexroth AG

Ordering details

01	02		03	04	05	06	07	08	
L	**7**	**21**							**0**

Family

01	Compact directional valve	**L**

Type

02	Flow diverters	**7**

Ports

03	G 3/8 DIN 3852	**3**
	G 1/2 DIN 3852	**4**
	3/4-16 UNF (SAE8)	**C**

Control type

04	Solenoid (coil C48) without manual override	**11**
	Solenoid (coil C48) with push-button type manual override	**1P**
	Solenoid (coil C48) with screw type manual override	**1F**
	Hydraulic / pneumatic control [1]	**P1**
	Manual push and twist control	**H1**

Spool variants

05	6 way / 2 position P1 side	**6_**

Drain type		**6A**	**6B**	**6E**	**6F**	**6G**	
06	Internal drain	●	●	–	●	●	**I**
	External drain	●	●	●	–	–	**E**

Voltage supply		**31**	**07**	**03**	**01**	**00**	
07	Manual push and twist control	–	–	–	–	–	**SG**
	Without coil	–	–	–	–	●	**00**
	12 V DC	●	●	●	●	–	**OB**
	13 V DC	–	●	–	●	–	**AD**
	24 V DC	●	●	●	●	–	**OC**
	27 V DC	–	●	–	●	–	**AC**
	48 V DC	–	–	–	●	–	**OD**

Electric connections

08	Without coils	**00**
	With coils, without mating connector DIN EN 175301-803 [2]	**01**
	With coils, with bi-directional diode, without mating connector vertical Amp-Junior	**03**
	With coils, with bi-directional diode, without mating connector DT04-2P	**07**
	With coils and bipolar sheathed lead 350mm (13,8 in) long	**31**

● = Available – = Not available

Symbols

Drain type I

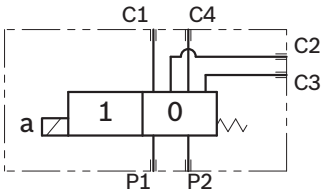

Drain type E

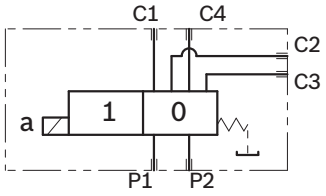

Spool variants

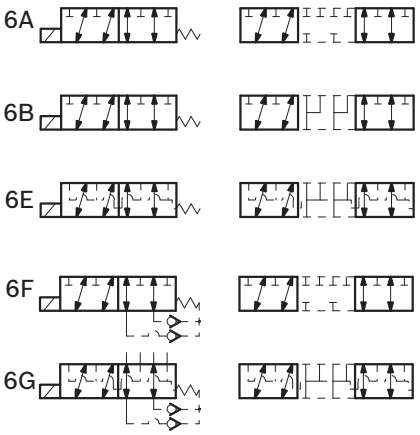

1) Minimum pressure 4 bar (58psi) with external drain (E), maximum pressure 200 bar (2901psi). With internal drain (I), at the minimum pressure (4 bar - 58psi), add the working pressure with ratio of 6,5:1. Example: With working pressure 100 bar (1450psi), minimum pilot pressure is 19.38 bar (281psi) ((100:6,5) + 4 bar (58psi)).

2) For connectors ordering code see data sheet RE 18325-90.

Functional description

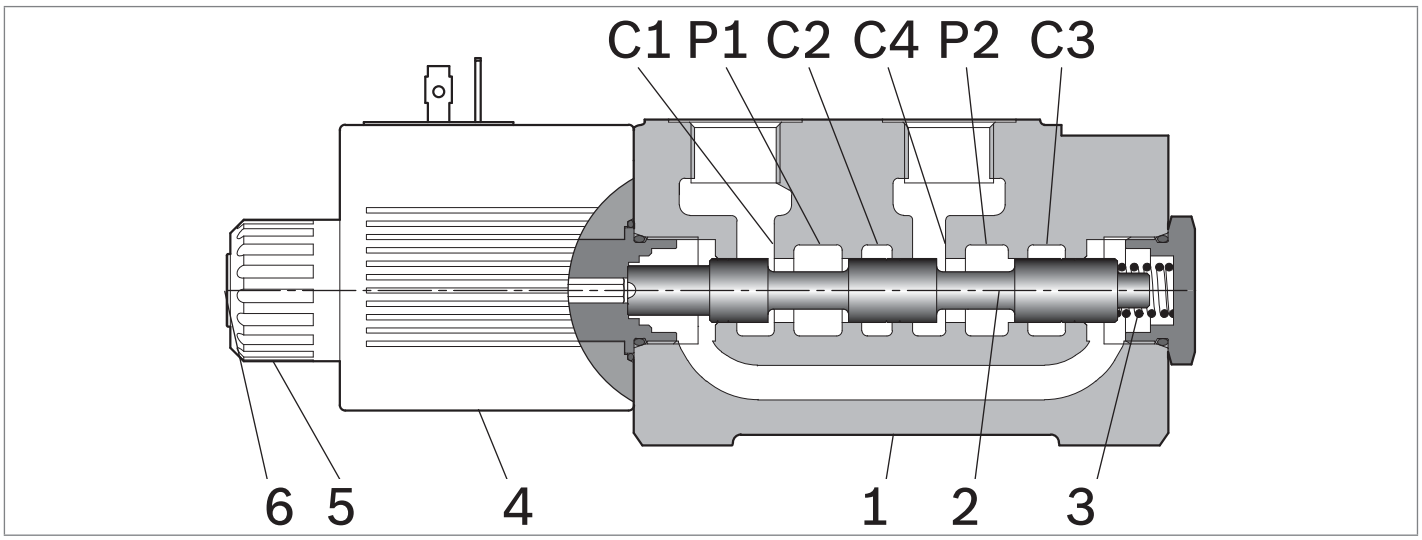

A valve basically consists of a housing (**1**), a control spool (**2**), a return spring (**3**) and a solenoid (**5**). It is designed to connect two inlet lines **P1** – **P2** (normally a set of hoses) and divert them to either the outlet ports (**C1** – **C4**) with spool in position "**0**", when the solenoid is de-energized, or to the outlet ports (**C2** – **C3**) with spool in position "**1**", when the solenoid is energized.
With the coil de-energized, the return spring (**3**) pushes back the spool (**2**) and holds it in position "**0**".
The coil (**5**) is fastened to the tube by the ring nut (**6**).
The manual override (**6**) allows to shift the spool (**2**) also in case of voltage shortage.
An external drain, to be connected to tank, ensures shifting operations also at higher working pressure.
Hydraulic / pneumatic pilot control, or manual push and twist control for spool shifting are available upon request.

Technical data

General		
Valve weight	kg (lbs)	2.85 (6.29)
Mounting position		unrestricted
Ambient Temperature	°C (°F)	–20....+50 (-4....+122) (NBR seals)
Hydraulic		
Maximum pressure with external drain ("E" type)	bar (psi)	310 (4500)
Maximum pressure with internal drain ("I" type)	bar (psi)	250 (3625)
Maximum pressure with internal drain and 6F or 6G scheme	bar (psi)	310 (4500)
Maximum flow	l/min (gpm)	60 (15.85)
Hydraulic fluid General properties: it must have physical lubricating and chemical properties suitable for use in hydraulic systems such as, for example:		Mineral oil based hydraulic fluids HL (DIN 51524 part 1). Mineral oil based hydraulic fluids HLP (DIN 51524 part 2). For use of environmentally acceptable fluids (vegetable or polyglycol base) please consult us.
Fluid Temperature	°C (°F)	–20....+80 (-4....+176) (NBR seals)
Permissible degree of fluid contamination		ISO 4572: $\beta_x \geq 75$ X = 12...15 ISO 4406: class 20/18/15 NAS 1638: class 9
Viscosity range	mm^2/s	5....420
Internal leakage with 100 bar (1450 psi) secondary pressure at C	cc/min (in^3/min)	min. 10 (0.61) - max. 20 (1.2)

Electrical						
Voltage type		DC				
Voltage tolerance (nominal voltage)	%	-10 .... +10				
Duty		Continuous, with ambient temperature ≤ 50°C (122°F)				
Coil wire temperature not to be exceeded	°C (°F)	150 (302)				
Insulation class		H				
Compliance with		Low Voltage Directive LVD 73/23/EC (2006/95/EC), 2004/108/EC				
Coil weight with DIN 43650 – ISO 4400 connector	kg (lbs)	0.5 (1.1)				
Voltage	V	12	13	24	27	48
Voltage type		DC	DC	DC	DC	DC
Power consumption	W	36	36	36	36	36
Current (nominal at 20 °C (68 °F))	A	3.0	2.77	1.53	1.32	0.75
Resistance (nominal at 20 °C (68 °F))	Ω	3.97	4.68	15.67	20.42	63.60

Note
For applications with different specifications consult us

Code	**Voltage [V]**	**Connector type**	**Coil description**	**Marking**	**Coil Mat no.**
OB 01	12 DC	EN 175301-803 (Ex. DIN 43650)	C4801 12DC	12 DC	R933000063
OB 03	12 DC	AMP JUNIOR	C4803 12DC	12 DC	R933000065
OB 07	12 DC	DEUTSCH DT 04-2P	C4807 12DC	12 DC	R933000068
OB 31	12 DC	Cable 350 mm long	C4831 12DC	12 DC	R933000064
AD 01	13 DC	EN 175301-803 (Ex. DIN 43650)	C4801 13DC	13 DC	R933000069
AD 07	13 DC	DEUTSCH DT 04-2P	C4807 13DC	13 DC	R933000073
OC 01	24 DC	EN 175301-803 (Ex. DIN 43650)	C4801 24DC	24 DC	R933000076
OC 03	24 DC	AMP JUNIOR	C4803 24DC	24 DC	R933000071
OC 07	24 DC	DEUTSCH DT 04-2P	C4807 24DC	24 DC	R933000075
OC 31	24 DC	Cable 350 mm long	C4831 24DC	24 DC	R933000070
AC 01	27 DC	EN 175301-803 (Ex. DIN 43650)	C4801 27DC	27 DC	R933000077
AC 07	27 DC	DEUTSCH DT 04-2P	C4807 27DC	27 DC	R933000074
OD 01	48 DC	DIN EN 175301-803 ISO 4400	C4801 48DC	48 DC	R933000078

Characteristic curves

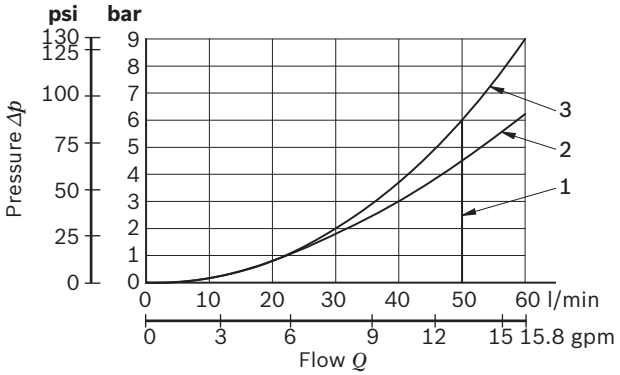

Model	Curve no.			
	P1>C1	P1>C2	C4> P2	C3>P2
VS151-G3/8	1	1	1	1
VS152-G1/2	2	2	3	3
VS155-SAE8	2	2	3	3

Measured with hydraulic fluid ISO-VG32 at 45° ±5 °C (113° ±9 °F); ambient temperature 20 °C (68 °F).
Port G1/2 DIN 3852

DI performance limits

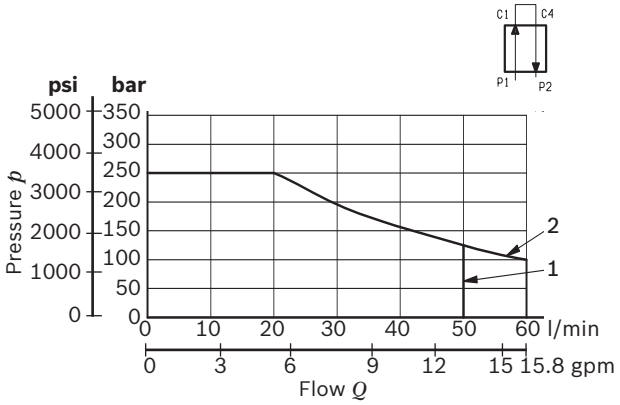

Model	Curve no.
VS151	1
VS152 - VS 155	2

Flow across both ways: forward across P1>C1 and reverse across C4>P2

DE performance limits

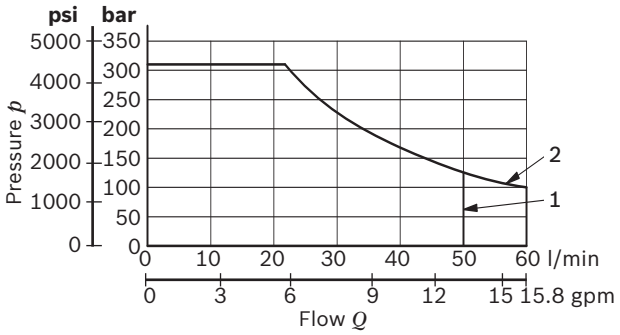

Model	Curve no.
VS151	1
VS152 - VS 155	2

Flow across both ways: forward across P1>C1 and reverse across C4>P2

External dimensions and fittings

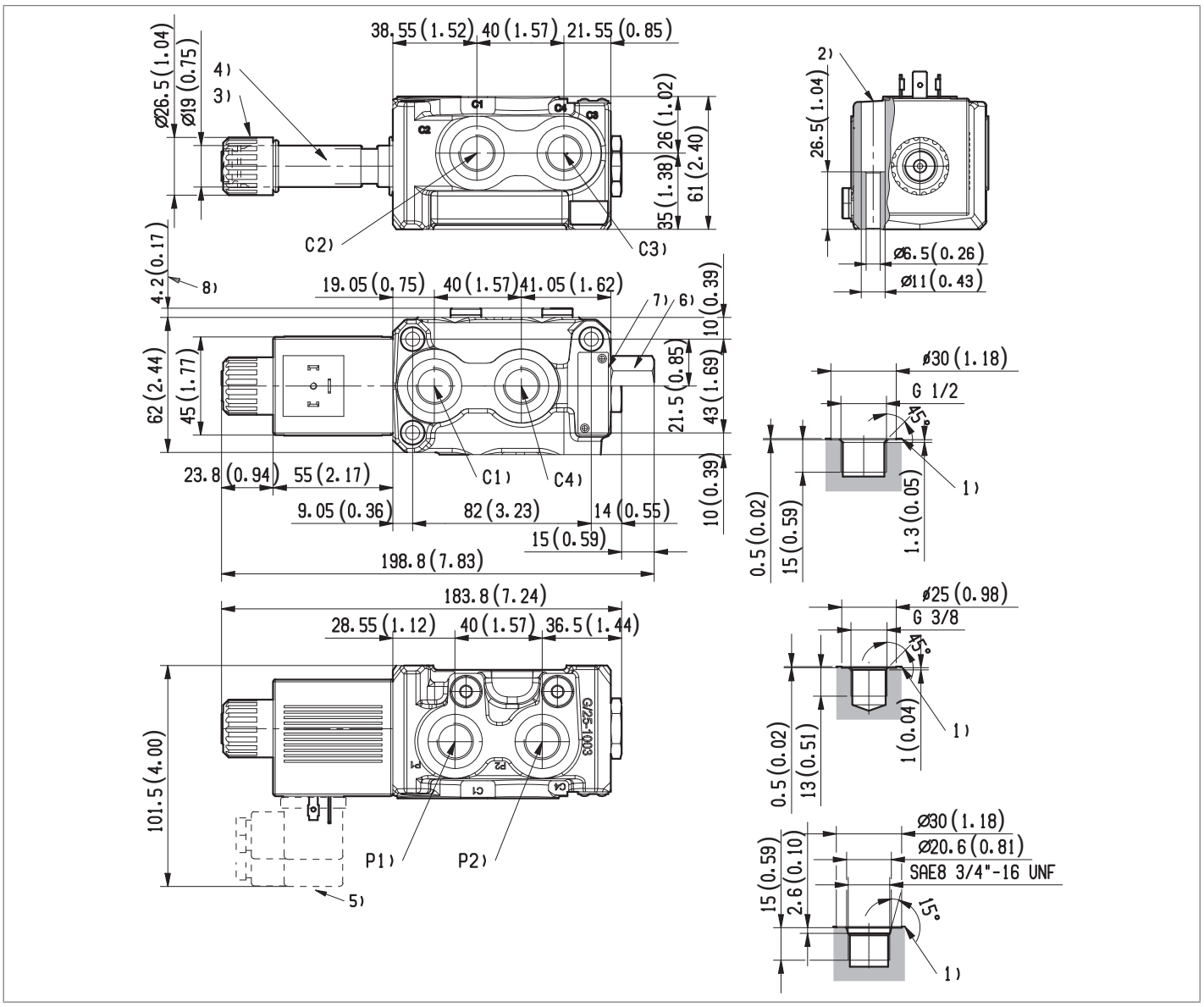

1 Ports P1, P2, C1, C2, C3, C4.
2 Three through installation holes reccomended screws M6x40 with strength class DIN 8.8.
Torque 9-10 Nm (14.7 – 16.2 ft-lb).
3 Ring nut for coil locking Ø 26.5 mm (1.04 inch).
Torque 6-7 Nm (4.4-5.2 ft-lb).
4 Solenoid tube Ø 19 mm (0.75 inch).
5 Minimum clearance needed for connector removal.
6 External drain plug available with G 1/4 and SAE 4 port.
7 Identification label.
8 Overall dimensions with 6F and 6G spools.

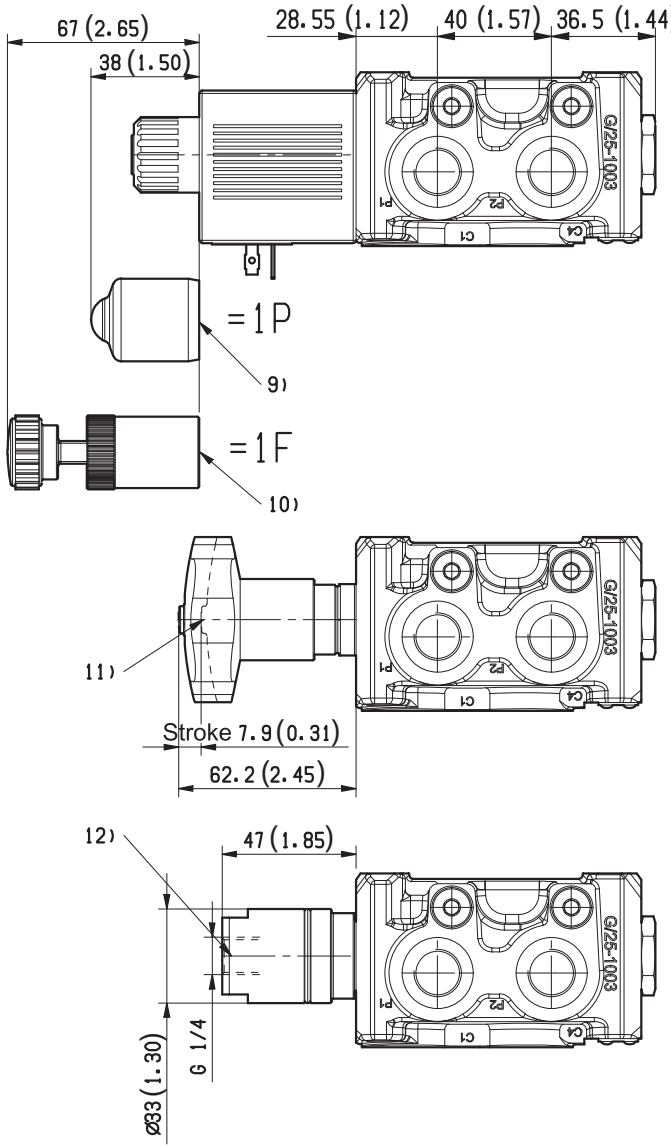

9 Optional push-button, 1P type, manual override for spool opening: it is pressure stuck to the ring nut for coil locking. Mat no. R933000043.

10 Optional screw type manual override, 1F type, for spool opening: it is screwed (torque 6-7Nm (4.4-5.2 ft-lb)) to the tube as replacement of the coil ring nut. (Mat no. R933007215)

11 Dimensions of manual version, push and twist type.

12 Dimensions of hydraulic / pneumatic piloted version. Pilot port plug available with G 1/4.

Dimensions [mm (inches)]

Electric connection

00

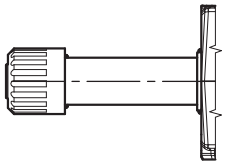

01

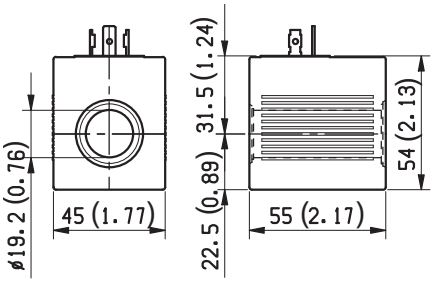

03 Protection class: IP 65 with female connector properly fitted (see drawing).

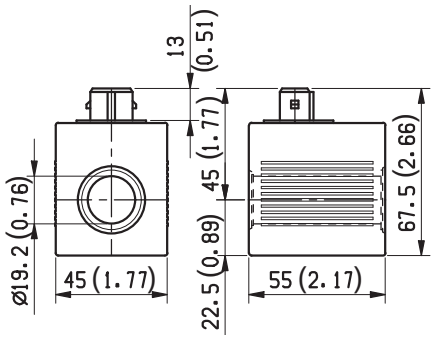

07 Protection class: IP 69 K with female connector properly fitted (see drawing).

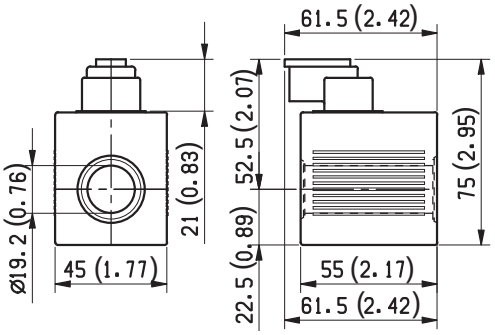

31

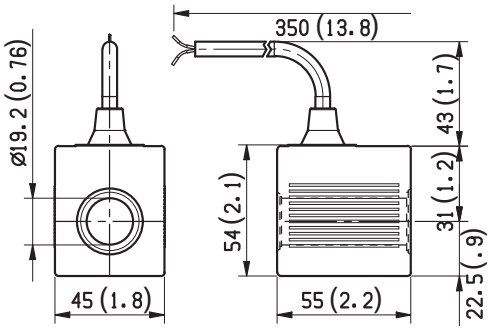

6/2 ways/positions flow diverters with ports C1, C2, C3 and C4 single side L725.... (VS161-VS165)

Size 6
Series 00
Maximum operating pressure 310 bar (4500 psi)
Maximum flow 60 l/min (15.85 gpm)
Ports G 3/8 - SAE8

General specifications

6 way 2 position valve.
Directional spool valve with direct solenoid control.
Hydraulic / pneumatic pilot, or manual push and twist control available as option.
Control spool operated by solenoid, with easily removable coil fastened by a ring nut.
Wet pin tube for DC coil, with push rod for mechanical override in case of voltage shortage.
Unrestricted 360° orientation of DC coil.
Control spool held in normal position by return spring.
Optional manual override (push-button or screw type).
Connectors available: DIN 43650 – ISO 4400, AMP Junior, DT04-2P (Deutsch), Free leads.

Contents

Ordering details	2
Symbols	2
Functional description	3
Technical data	3
Characteristic curves	5
External dimensions and fittings	6
Electric connection	8

RE 18301-06/02.2012 Bosch Rexroth AG

Ordering details

01	02		03	04	05	06	07	08	
L	**7**	**25**							**0**

Family

01	Compact directional valve	**L**

Type

02	Flow diverters	**7**

Ports

03	G 3/8 DIN 3852	**3**
	3/4-16 UNF (SAE8)	**C**

Control type

04	Solenoid (coil C48) without manual override	**11**
	Solenoid (coil C48) with push-button type manual override	**1P**
	Solenoid (coil C48) with screw type manual override	**1F**
	Hydraulic / pneumatic control [1]	**P1**
	Manual push and twist control	**H1**

Spool variants

05	6 way / 2 position P1 side	**6_**

Drain type		**6A**	**6B**	**6E**	**6F**	**6G**	
06	Internal drain	●	●	–	●	●	**I**
	External drain	●	●	●	–	–	**E**

Voltage supply		**31**	**07**	**03**	**01**	**00**	
07	Manual push and twist control	–	–	–	–	–	**SG**
	Without coil	–	–	–	–	●	**00**
	12 V DC	●	●	●	●	–	**OB**
	13 V DC	–	●	–	●	–	**AD**
	24 V DC	●	●	●	●	–	**OC**
	27 V DC	–	●	–	●	–	**AC**
	48 V DC	–	–	–	●	–	**OD**

Electric connections

08	Without coils	**00**
	With coils, without mating connector DIN EN 175301-803 [2]	**01**
	With coils, with bi-directional diode, without mating connector vertical Amp-Junior	**03**
	With coils, with bi-directional diode, without mating connector DT04-2P	**07**
	With coils and bipolar sheathed lead 350mm (13,8 in) long	**31**

● = Available – = Not available

Symbols

Drain type I

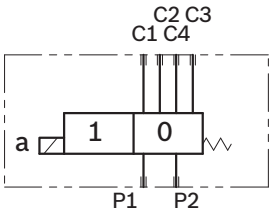

Drain type E

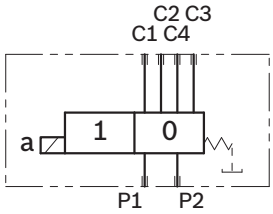

Spool variants

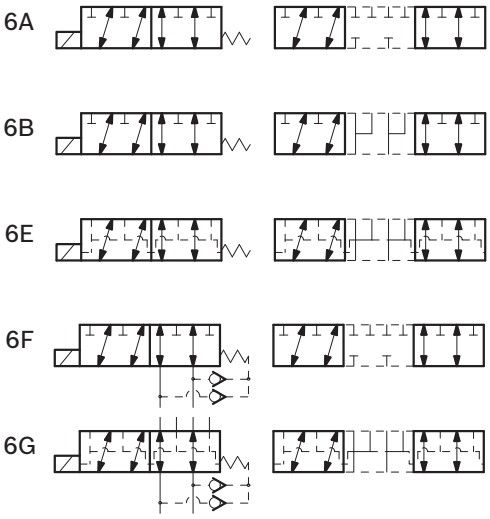

1) Minimum pressure 4 bar (58psi) with external drain (E), maximum pressure 200 bar (2901psi). With internal drain (I), at the minimum pressure (4 bar - 58psi), add the working pressure with ratio of 6,5:1. Example: With working pressure 100 bar (1450psi), minimum pilot pressure is 19.38 bar (281psi) ((100:6,5) + 4 bar (58psi)).

2) For connectors ordering code see data sheet RE 18325-90.

Functional description

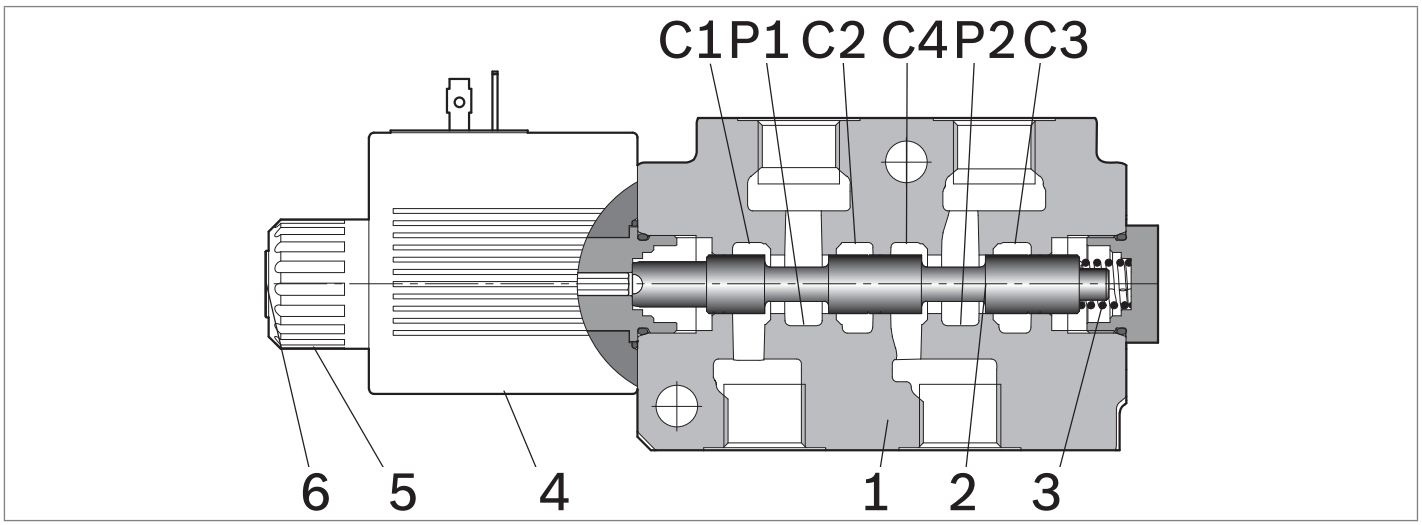

A valve basically consists of a housing (**1**), a control spool (**2**), a return spring (**3**) and a solenoid (**5**). It is designed to connect two inlet lines **P1** – **P2** (normally a set of hoses) and divert them to either the outlet ports (**C1** – **C4**) with spool in position "**0**", when the solenoid is de-energized, or to the outlet ports (**C2** – **C3**) with spool in position "**1**", when the solenoid is energized.
With the coil de-energized, the return spring (**3**) pushes back the spool (**2**) and holds it in position "**0**"
The coil (**4**) is fastened to the tube by the ring nut (**5**).
The manual override (**6**) allows to shift the spool (**2**) also in case of voltage shortage.
An external drain, to be connected to tank, ensures shifting operations also at higher working pressure.
Hydraulic / pneumatic pilot control, or manual push and twist control for spool shifting are available upon request.

Technical data

General		
Valve weight	kg (lbs)	3.0 (6.6)
Mounting position		unrestricted
Ambient Temperature	°C (°F)	–20....+50 (-4....+122) (NBR seals)
Hydraulic		
Maximum pressure with external drain ("E" type)	bar (psi)	310 (4500)
Maximum pressure with internal drain ("I" type)	bar (psi)	250 (3625)
Maximum pressure with internal drain and 6F or 6G scheme	bar (psi)	310 (4500)
Maximum inlet flow	l/min (gpm)	60 (15.85)
Hydraulic fluid General properties: it must have physical lubricating and chemical properties suitable for use in hydraulic systems such as, for example:		Mineral oil based hydraulic fluids HL (DIN 51524 part 1). Mineral oil based hydraulic fluids HLP (DIN 51524 part 2). For use of environmentally acceptable fluids (vegetable or polyglycol base) please consult us.
Fluid Temperature	°C (°F)	–20....+80 (-4....+176) (NBR seals)
Permissible degree of fluid contamination		ISO 4572: $\beta_x \geq 75$ X = 12...15 ISO 4406: class 20/18/15 NAS 1638: class 9
Viscosity range	mm^2/s	5....420
Internal leakage with 100 bar (1450 psi) secondary pressure at C	cc/min (in^3/min)	min. 10 (0.61) - max. 20 (1.2)

Electrical						
Voltage type		DC				
Voltage tolerance (nominal voltage)	%	-10 .... +10				
Duty		Continuous, with ambient temperature ≤ 50°C (122°F)				
Coil wire temperature not to be exceeded	°C (°F)	150 (302)				
Insulation class		H				
Compliance with		Low Voltage Directive LVD 73/23/EC (2006/95/EC), 2004/108/EC				
Coil weight with DIN 43650 – ISO 4400 connector	kg (lbs)	0.5 (1.1)				
Voltage	V	12	13	24	27	48
Voltage type		DC	DC	DC	DC	DC
Power consumption	W	36	36	36	36	36
Current (nominal at 20 °C (68 °F))	A	3.0	2.77	1.53	1.32	0.75
Resistance (nominal at 20 °C (68 °F))	Ω	3.97	4.68	15.67	20.42	63.60

Note
For applications with different specifications consult us

Code	Voltage [V]	Connector type	Coil description	Marking	Coil Mat no.
OB 01	12 DC	EN 175301-803 (Ex. DIN 43650)	C4801 12DC	12 DC	R933000063
OB 03	12 DC	AMP JUNIOR	C4803 12DC	12 DC	R933000065
OB 07	12 DC	DEUTSCH DT 04-2P	C4807 12DC	12 DC	R933000068
OB 31	12 DC	Cable 350 mm long	C4831 12DC	12 DC	R933000064
AD 01	13 DC	EN 175301-803 (Ex. DIN 43650)	C4801 13DC	13 DC	R933000069
AD 07	13 DC	DEUTSCH DT 04-2P	C4807 13DC	13 DC	R933000073
OC 01	24 DC	EN 175301-803 (Ex. DIN 43650)	C4801 24DC	24 DC	R933000076
OC 03	24 DC	AMP JUNIOR	C4803 24DC	24 DC	R933000071
OC 07	24 DC	DEUTSCH DT 04-2P	C4807 24DC	24 DC	R933000075
OC 31	24 DC	Cable 350 mm long	C4831 24DC	24 DC	R933000070
AC 01	27 DC	EN 175301-803 (Ex. DIN 43650)	C4801 27DC	27 DC	R933000077
AC 07	27 DC	DEUTSCH DT 04-2P	C4807 27DC	27 DC	R933000074
OD 01	48 DC	DIN EN 175301-803 ISO 4400	C4801 48DC	48 DC	R933000078

Characteristic curves

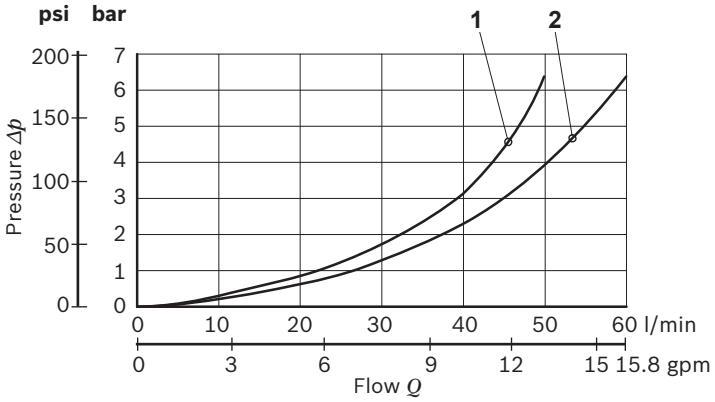

Model	Curve no.			
	P1>C1	P1>C2	P2>C4	P2>C3
VS 161	1	1	1	1
VS 165	2	2	2	2

Measured with hydraulic fluid ISO-VG32 at 45° ±5 °C (113° ±9 °F); ambient temperature 20 °C (68 °F).

DI-DE performance limits

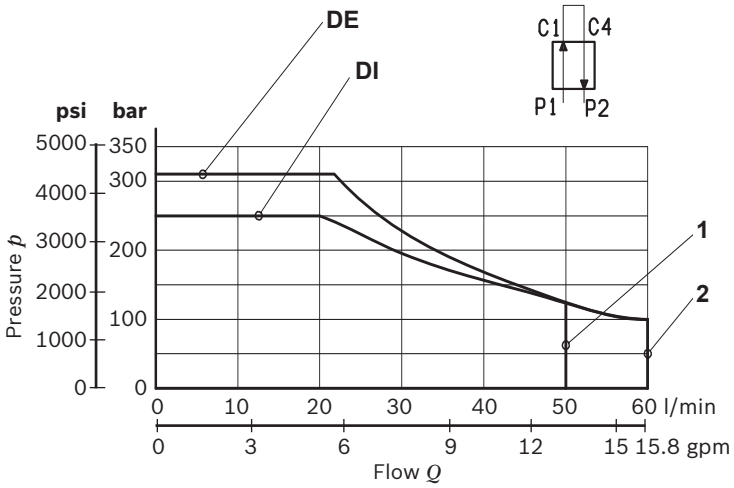

Model	Curve no.
VS 161	1
VS 165	2

Flow across both ways: forward across P1>C1 and reverse across C4>P2

External dimensions and fittings

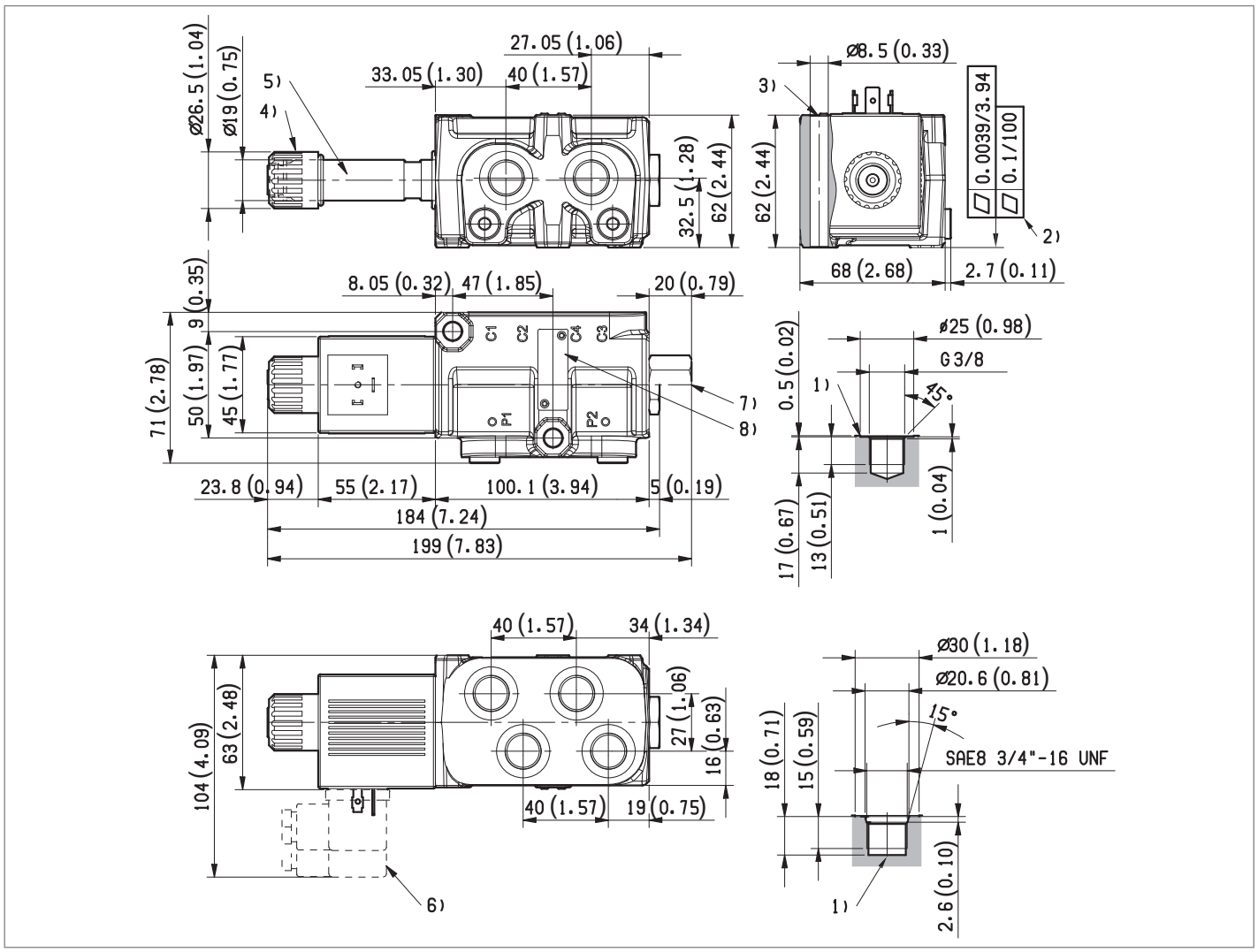

1 Ports P1, P2, C1, C2, C3, C4.
2 The mounting surface flatness must comply with specifications.
3 Two through installation holes reccomended screws M8x70 with strength class DIN 8.8.
Torque 15 – 16 Nm (11.1-11.8 ft-lb).
4 Ring nut for coil locking Ø 26.5 mm (1.04 inch).
Torque 5-6 Nm (3.6-4.4 ft-lb).
5 Solenoid tube Ø 19 mm (0.75 inch).
6 Minimum clearance needed for connector removal.
7 External drain plug available with G 1/4 and SAE 4 port.
8 Identification label.

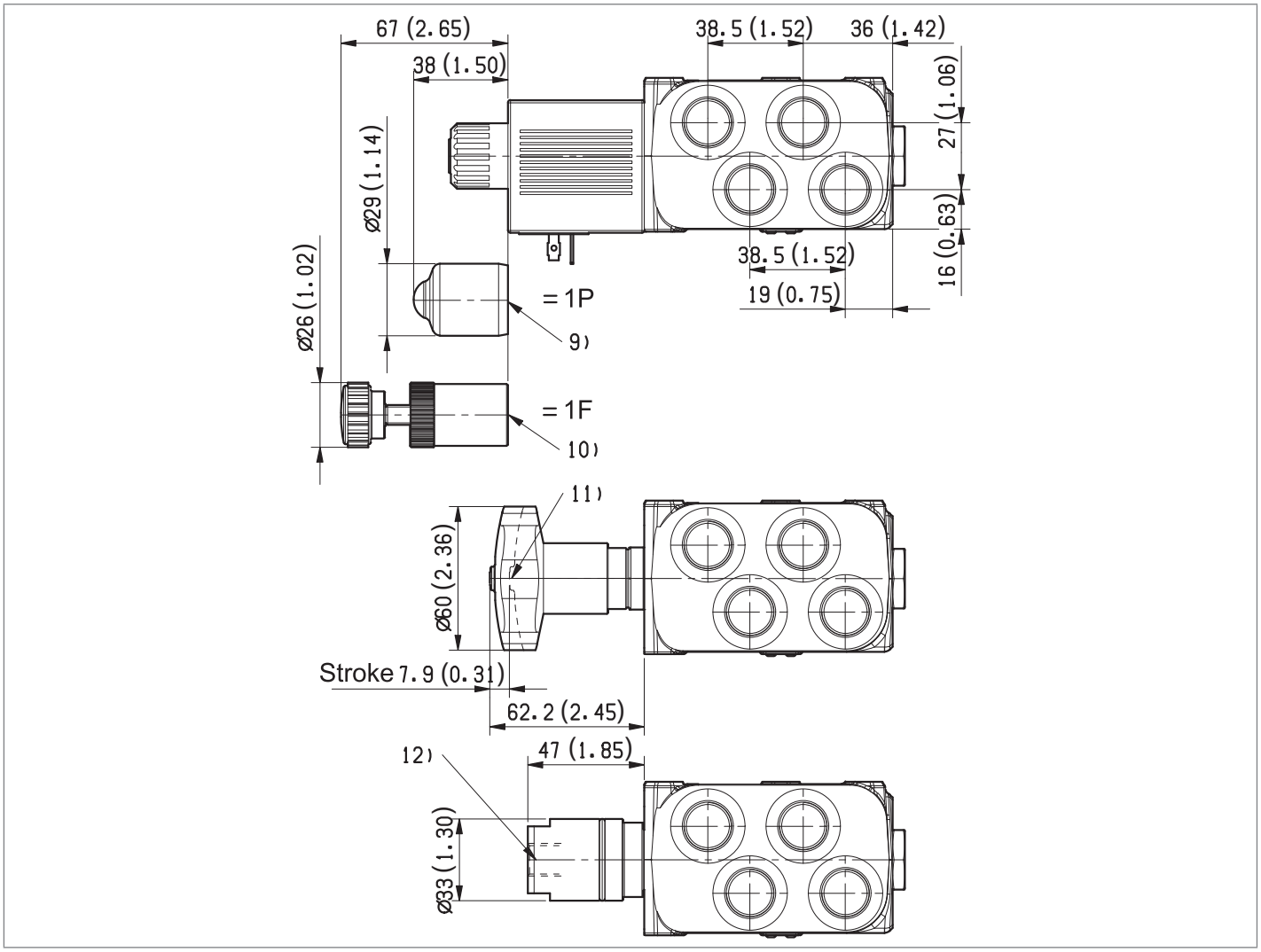

9 Optional push-button, 1P type, manual override for spool opening: it is pressure stuck to the ring nut for coil locking. Mat no. R933000043

10 Optional screw type manual override, 1F type, for spool opening: it is screwed (torque 6-7Nm (4.4-5.2 ft-lb)) to the tube as replacement of the coil ring nut. (Mat no. R9 33007215)

11 Dimensions of manual version, push and twist type.

12 Dimensions of hydraulic / pneumatic piloted version. Pilot port plug available with G 1/4.

Dimensions [mm (inches)]

Electric connection

00

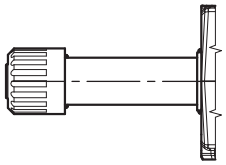

01

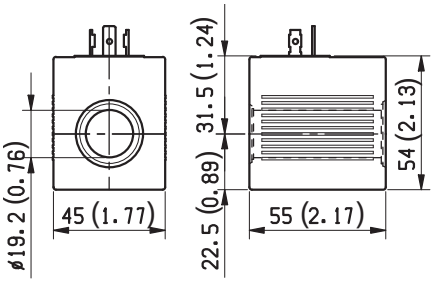

03 Protection class: IP 65 with female connector properly fitted (see drawing).

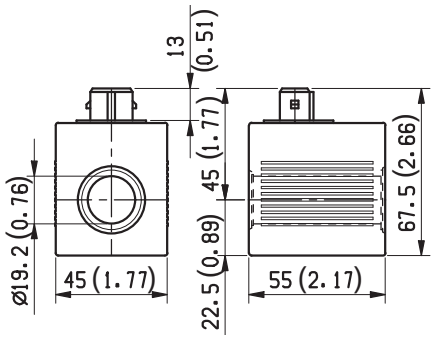

07 Protection class: IP 69 K with female connector properly fitted (see drawing).

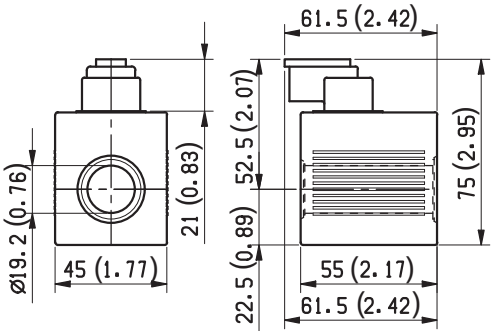

31

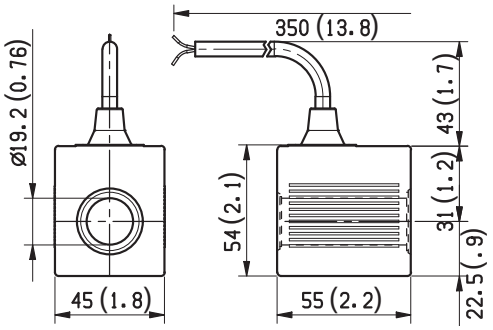

6/2 ways/positions flow diverters L753.... (VS311-VS312-VS315)

Size 10
Series 00
Maximum operating pressure 310 bar (4500 psi)
Maximum flow 140 l/min (36.98 gpm)
Ports G 1/2 - G 3/4 - SAE12

General specifications

6 way 2 position valve.
Directional spool valve with direct solenoid control.
Hydraulic / pneumatic pilot , or manual push and twist control available as option.
Control spool operated by solenoid, with easily removable coil fastened by a ring nut.
Wet pin tube for DC coil, with push rod for mechanical override in case of voltage shortage.
Unrestricted 360° orientation of DC coil.
Control spool held in normal position by return spring.
Optional manual override (push-button or screw type).
Connectors available: DIN 43650 – ISO 4400, AMP Junior, DT04-2P (Deutsch), Free leads.

Contents

Ordering details	2
Symbols	2
Functional description	3
Technical data	3
Characteristic curves	5
External dimensions and fittings	6
Electric connection	8

RE 18301-07/04.2015 Bosch Rexroth AG

Ordering details

01	02		03	04	05	06	07	08	
L	**7**	**53**							**0**

Family

01	Compact directional valve	**L**

Type

02	Flow diverters	**7**

Ports

03	G 1/2 DIN 3852	**4**
	G 3/4 DIN 3852	**5**
	1 1/16-12 UN (SAE12)	**E**

Control type

04	Solenoid (coil C 65) without manual override	**14**
	Solenoid (coil C 65) with push-button type manual override	**4P**
	Solenoid (coil C65) with screw type manual override zinc plated screw	**4F**
	Solenoid (coil C65) with screw type manual override with stainless steel screw	**4X**
	Hydraulic / pneumatic control [1]	**P1**
	Manual push and twist control	**H1**

Spool variants

05	6 way / 2 position P1 side	**6_**

Drain type		**6A**	**6B**	**6E**	**6F**	**6G**	
06	Internal drain	●	●	–	●	●	**I**
	External drain	●	●	●	–	–	**E**

Voltage supply		**31**	**07**	**03**	**01**	**00**	
07	Without coil	–	–	–	–	●	**00**
	12 V DC	●	●	●	●	–	**OB**
	13 V DC	–	●	–	●	–	**AD**
	24 V DC	●	●	●	●	–	**OC**
	27 V DC	–	●	–	●	–	**AC**
	48 V DC	–	–	–	●	–	**OD**

Electric connections

08	Without coils	**00**
	With coils, without mating connector DIN EN 175301-803 [2]	**01**
	With coils, with bi-directional diode, without mating connector vertical Amp-Junior	**03**
	With coils, with bi-directional diode, without mating connector DT04-2P	**07**
	With coils and bipolar sheathed lead 350mm (13,8 in) long	**31**

● = Available – = Not available

Symbols

Drain type I

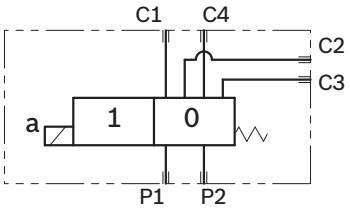

Drain type E

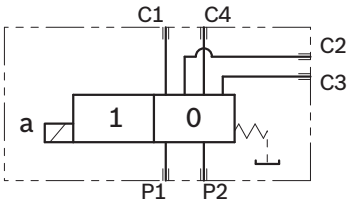

Spool variants

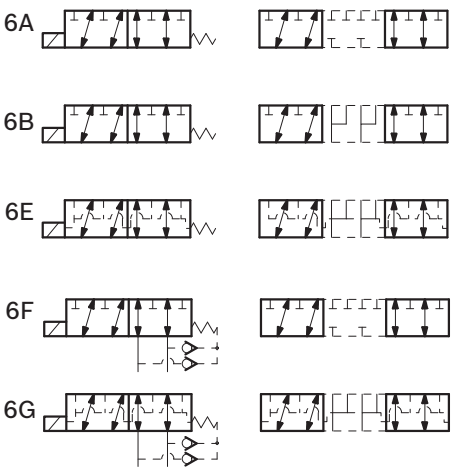

1) Minimum pressure 4 bar (58psi) with external drain (E), maximum pressure 200 bar (2901psi). With internal drain (I), at the minimum pressure (4 bar - 58psi), add the working pressure with ratio of 11:1. Example: With working pressure 100 bar (1450psi), minimum pilot pressure is 13.09 bar (190psi) ((100:11) + 4 bar (58psi)).

2) For connectors ordering code see data sheet RE 18325-90.

Functional description

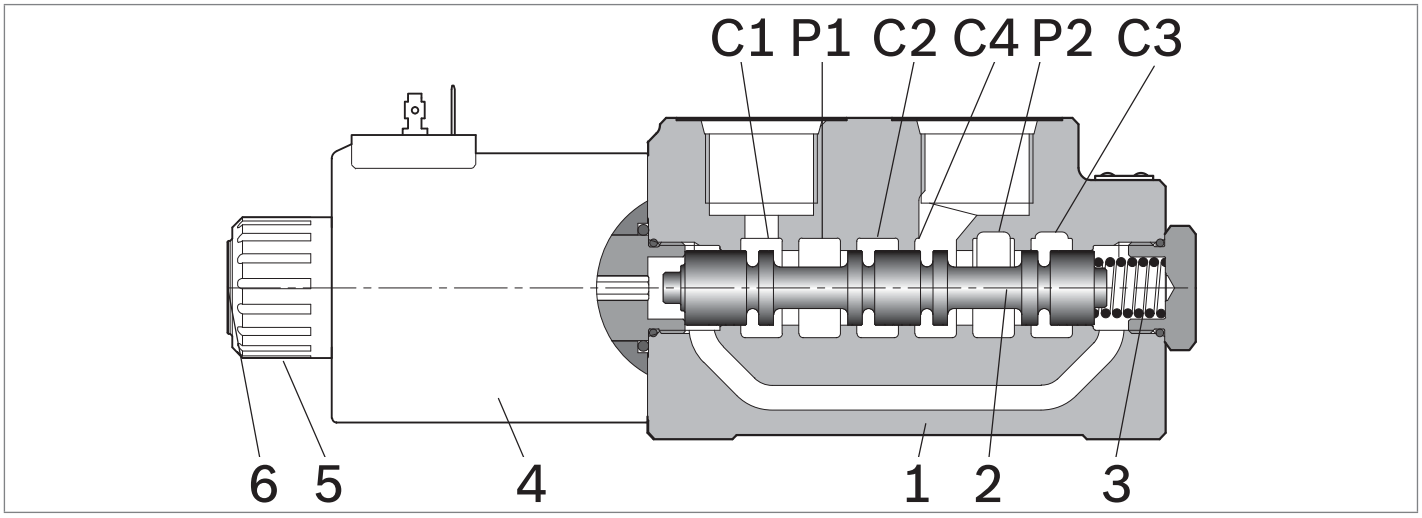

A valve basically consists of a housing (**1**), a control spool (**2**), a return spring (**3**) and a solenoid (**5**). It is designed to connect two inlet lines **P1** – **P2** (normally a set of hoses) and divert them to either the outlet ports (**C1** – **C4**) with spool in position "**0**", when the solenoid is de-energized, or to the outlet ports (**C2** – **C3**) with spool in position "**1**", when the solenoid is energized.
With the coil de-energized, the return spring (**3**) pushes back the spool (**2**) and holds it in position "**0**".
The coil (**5**) is fastened to the tube by the ring nut (**6**).
The manual override (**6**) allows to shift the spool (**2**) also in case of voltage shortage.
An external drain, to be connected to tank, ensures shifting operations also at higher working pressure.
Hydraulic / pneumatic pilot control for spool shifting is available upon request.

Technical data

General		
Valve weight	kg (lbs)	5.1 (11.2)
Mounting position		unrestricted
Ambient Temperature	°C (°F)	–20....+50 (-4....+122) (NBR seals)
Hydraulic		
Maximum pressure with external drain ("E" type)	bar (psi)	310 (4500)
Maximum pressure with internal drain ("I" type)	bar (psi)	250 (3625)
Maximum pressure with internal drain and 6F or 6G scheme	bar (psi)	310 (4500)
Maximum flow	l/min (gpm)	140 (36.98)
Pilot pressure needed for hydraulic / pneumatic control	bar (psi)	max 200 (2900) - min 4 (58) with external drain. For versions with internal drain, the pilot pressure required should be at least 11 times higher than inlet pressure (ratio 11:1).
Hydraulic fluid General properties: it must have physical lubricating and chemical properties suitable for use in hydraulic systems such as, for example:		Mineral oil based hydraulic fluids HL (DIN 51524 part 1). Mineral oil based hydraulic fluids HLP (DIN 51524 part 2). For use of environmentally acceptable fluids (vegetable or polyglycol base) please consult us.
Fluid Temperature	°C (°F)	–20....+80 (-4....+176) (NBR seals)
Permissible degree of fluid contamination		ISO 4572: $\beta_x \geq 75$ X = 12...15 ISO 4406: class 20/18/15 NAS 1638: class 9
Viscosity range	mm^2/s	5....420
Internal leakage with 100 bar (1450 psi) secondary pressure at C	cc/min (in^3/min)	min. 15 (0.9) - max. 40 (2.4)

Electrical						
Voltage type		DC				
Voltage tolerance (nominal voltage)	%	-10 .... +10				
Duty		Continuous, with ambient temperature ≤ 50°C (122°F)				
Coil wire temperature not to be exceeded	°C (°F)	150 (302)				
Insulation class		H				
Compliance with		Low Voltage Directive LVD 73/23/EC (2006/95/EC), 2004/108/EC				
Coil weight with DIN 43650 – ISO 4400 connector	kg (lbs)	1.05 (2.3)				
Voltage	V	12	13	24	27	48
Voltage type		DC	DC	DC	DC	DC
Power consumption	W	44	44	44	44	44
Current (nominal at 20 °C (68 °F))	A	3.6	3.4	1.8	1.6	0.9
Resistance (nominal at 20 °C (68 °F))	Ω	3.2	3.6	12.8	16.9	50.5

Note
For applications with different specifications consult us

Code	**Voltage [V]**	**Connector type**	**Coil description**	**Marking**	**Coil Mat no.**
OB 01	12 DC	EN 175301-803 (Ex. DIN 43650)	C6501 12DC	12 DC	R933000100
OB 03	12 DC	AMP JUNIOR	C6503 12DC	12 DC	R933000119
OB 07	12 DC	DEUTSCH DT 04-2P	C6507 12DC	12 DC	R933000107
OB 31	12 DC	Cable 350 mm long	C6531 12DC	12 DC	R933000104
AD 01	13 DC	EN 175301-803 (Ex. DIN 43650)	C6501 13DC	13 DC	R933000101
AD 07	13 DC	DEUTSCH DT 04-2P	C6507 13DC	13 DC	R933000112
OC 01	24 DC	EN 175301-803 (Ex. DIN 43650)	C6501 24DC	24 DC	R933000102
OC 03	24 DC	AMP JUNIOR	C6503 24DC	24 DC	R933000120
OC 07	24 DC	DEUTSCH DT 04-2P	C6507 24DC	24 DC	R933000111
OC 31	24 DC	Cable 350 mm long	C6531 24DC	24 DC	R933000110
AC 01	27 DC	EN 175301-803 (Ex. DIN 43650)	C6501 27DC	27 DC	R933000103
AC 03	27 DC	AMP JUNIOR	C6503 27DC	27 DC	R93307055
AC 07	27 DC	DEUTSCH DT 04-2P	C6507 27DC	27 DC	R933000113
OD 01	48 DC	EN 175301-803 (Ex. DIN 43650)	C6501 48DC	48 DC	R933000114

Characteristic curves

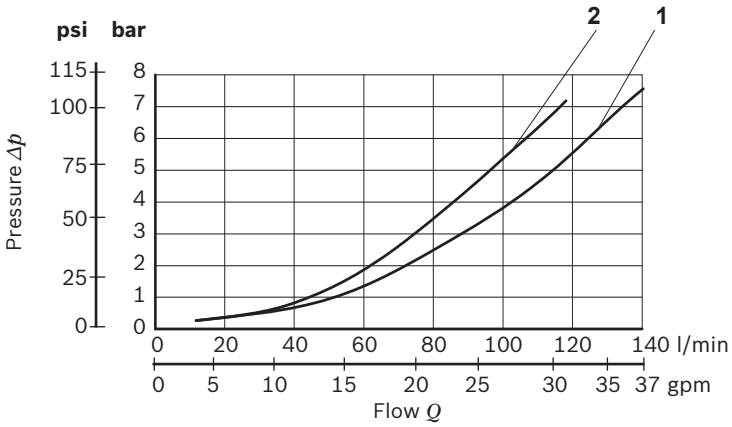

Model	Curve no.			
	P1>C1	P1>C2	P2>C4	P2>C3
VS311	2	2	2	2
VS312-VS315	1	1	1	1

Measured with hydraulic fluid ISO-VG32 at 45° ±5 °C (113° ±9 °F); ambient temperature 20 °C (68 °F).

DI-DE performance limits

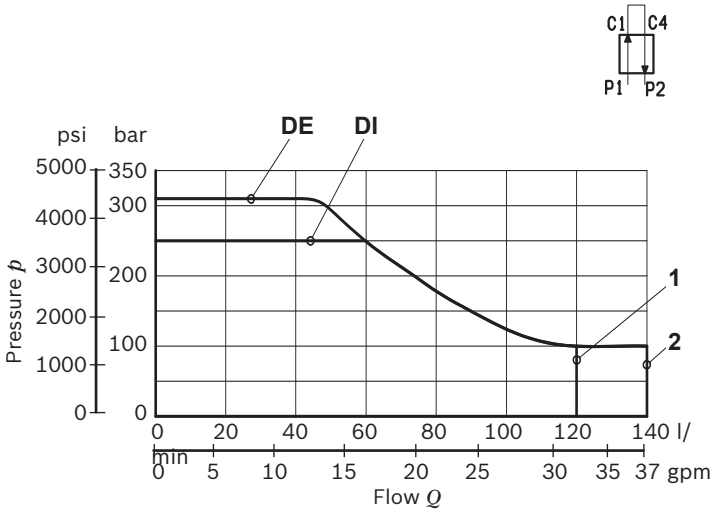

Model	Curve no.
VS311	1
VS312-VS315	2

Flow across both ways: forward across P1>C1 and reverse across C4>P2

External dimensions and fittings

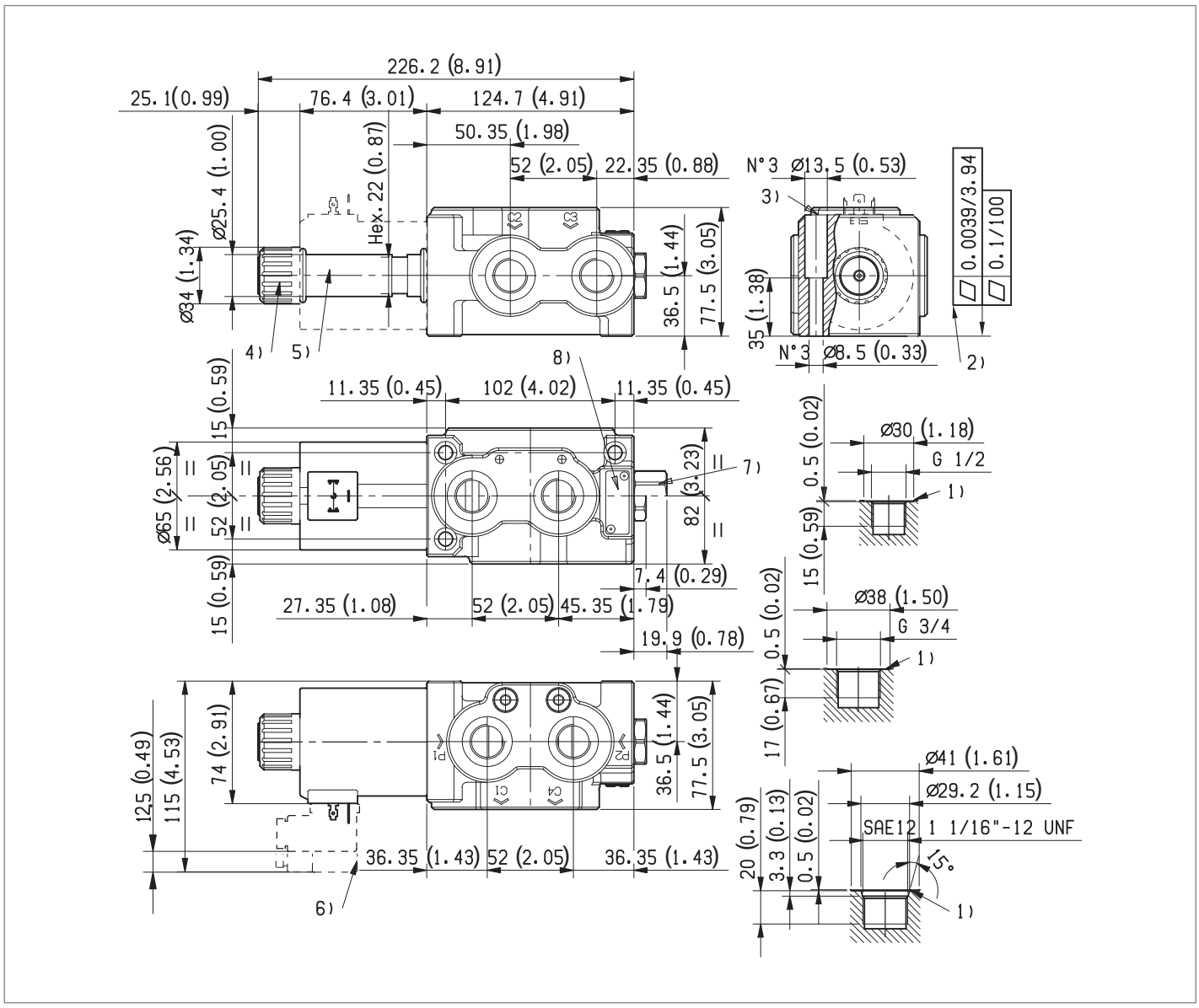

1 Ports P1, P2, C1, C2, C3, C4.
2 The mounting surface flatness must comply with specifications.
3 Two through holes reccomended screws M8x45 with strength class DIN 8.8.
Torque 15 – 16 Nm (11.1–11.8 ft-lb).
4 Ring nut for coil locking Ø 34 mm (1.34 inch).
Torque 7–8 Nm (5.2 – 5.9 ft-lb).
5 Solenoid tube Ø 25,4 mm (1.00 inch).
6 Minimum clearance needed for connector removal.

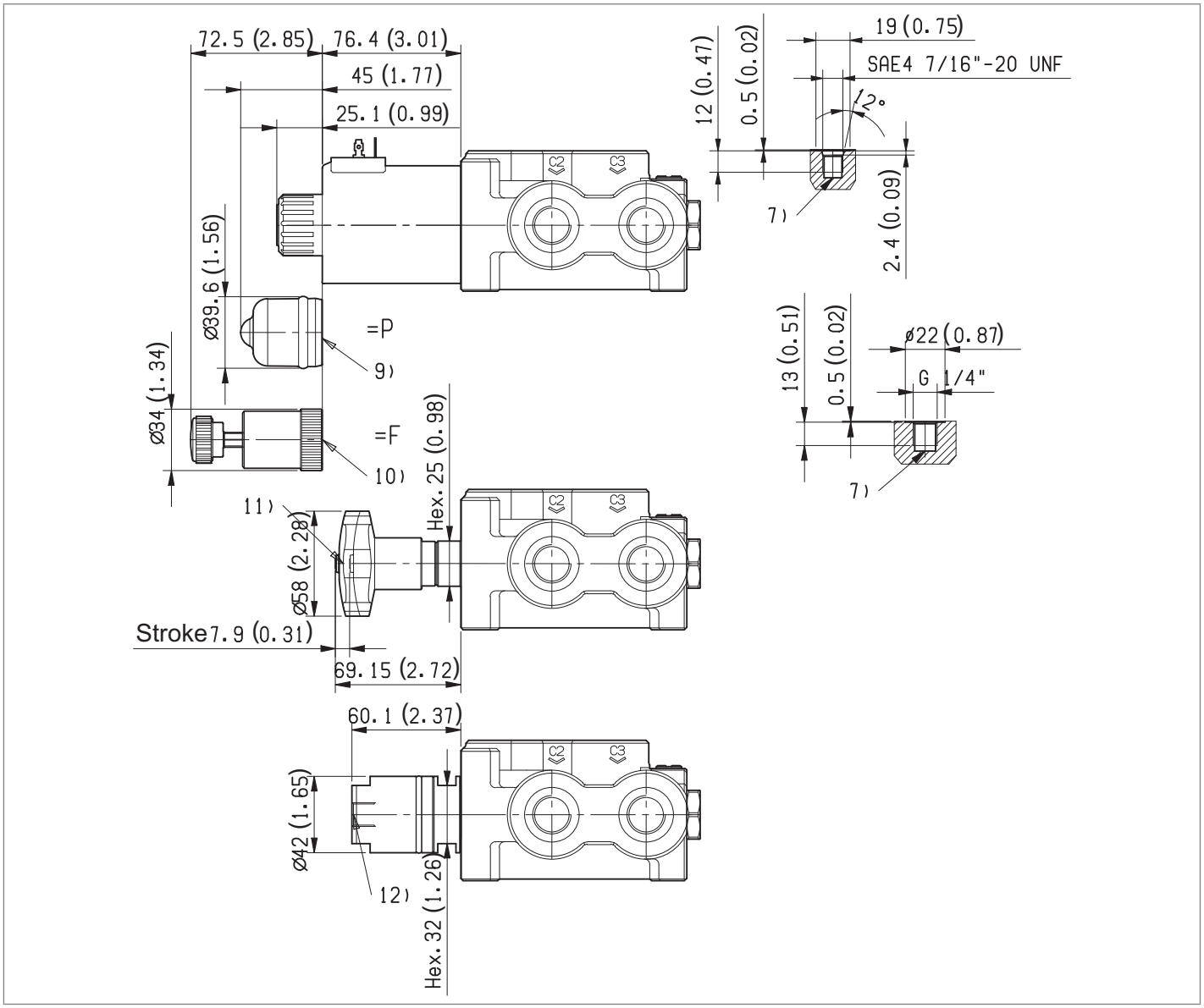

7 External drain plug available with G 1/4 and SAE 4 port.
8 Identification label.
9 Optional push-button, 4P type, manual override for spool opening: it is pressure stuck to the ring nut for coil locking. Mat no. R933003424
10 Optional screw type manual override, 4F or 4X types, for spool opening: it is screwed (torque 8-9 Nm (5.9-6.6 ft-lb)) to the tube as replacement of the coil ring nut. Mat no. R933003713 zinc plated, Mat no. R933009577 stainless steel.
11 Dimensions of manual version, push and twist type.
12 Dimensions of hydraulic / pneumatic piloted version. Pilot port plug available with G 1/4.

Dimensions [mm (inches)]

Electric connection

00

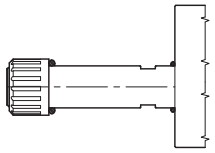

01

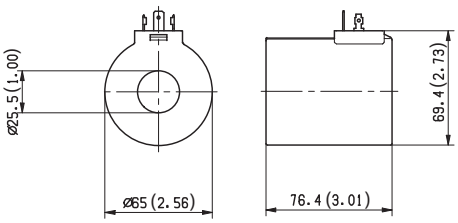

03 Protection class: IP 65 with female connector properly fitted (see drawing).

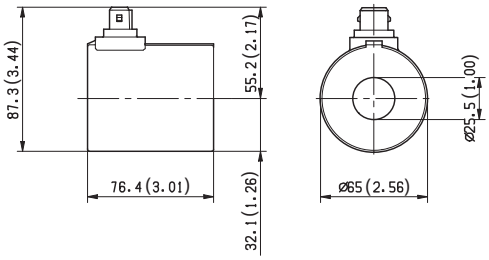

07 Protection class: IP 69 K with female connector properly fitted (see drawing).

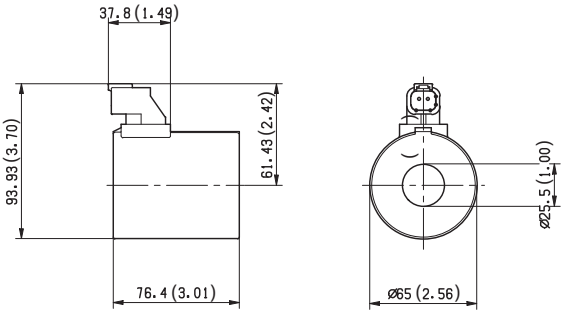

31

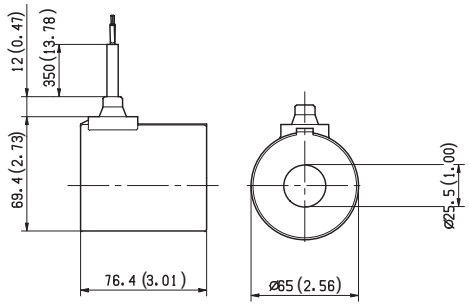

6/2 ways/positions piloted flow diverters - Size 16
L7556... (VS400)

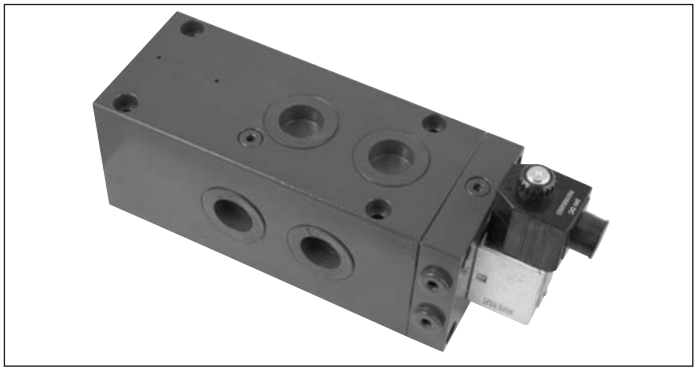

Size 16
Series 00
Maximum operating pressure 310 bar (4500 psi)
Maximum flow 220 l/min (58.1 gpm)
Ports G 1

General specifications

6 way 2 position valve.
Directional spool valve hydraulically piloted through solenoid control.
Solenoid with easily removable coil fastened by a ring nut.
Wet pin tube for DC coil, with push rod for mechanical override in case of voltage shortage.
Unrestricted 360° orientation of DC coil.
Control spool held in normal position by return spring.
Connectors available: DIN 43650 – ISO 4400, AMP Junior, DT04-2P (Deutsch), Free leads.

Contents

Ordering details	2
Symbols	2
Functional description	3
Technical data	3
Characteristic curves	5
External dimensions and fittings	6
Electric connection	7

Ordering details

01	02		03	04		05	06	07	
L	**7**	**55**	**6**		**6B**				**0**

Family

01	Compact directional valve	**L**

Type

02	Flow diverters	**7**

Ports

03	G 1 DIN3852	**6**

Control type

04	Without pilot solenoid valve	**00**
	With pilot solenoid valve one coil, without mechanical detent	**10**
	With pilot solenoid valve two coils, with mechanical detent	**1D**

Configuration, pilot and drain type

05	Internal pilot and drain	**1**
	External pilot and drain	**2**
	External pilot and internal drain	**3**
	External drain and internal pilot	**4**

Voltage supply		**31**	**07**	**04**	**03**	**01**	**00**	
06	Without coil	–	–	–	–	–	●	**00**
	12 V DC	●	●	●	●	●	–	**OB**
	13 V DC	–	–	–	–	●	–	**AD**
	24 V DC	●	●	●	●	●	–	**OC**
	27 V DC	–	–	–	–	●	–	**AC**
	48 V DC	–	–	●	–	●	–	**OD**
	110 V DC	–	–	–	–	●	–	**OE**

Electric connections

07	Without coils	**00**
	With coils, without mating connector DIN EN 175301-803 [1]	**01**
	With coils, with bi-directional diode, without mating connector vertical Amp-Junior	**03**
	With coils, with bi-directional diode, without mating connector horizontal Amp-Junior	**04**
	With coils, with bi-directional diode, without mating connector DT04-2P	**07**
	With coils and bipolar sheathed lead 350mm (13,8 in) long	**31**

● = Available – = Not available

Symbols

Internal pilot and drain

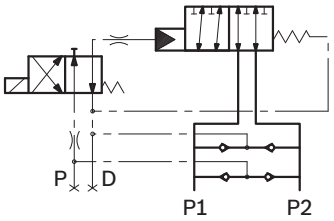

External pilot and drain

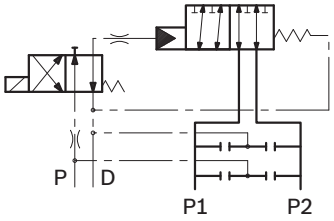

External pilot and internal drain

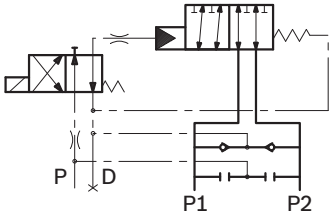

External drain and internal pilot

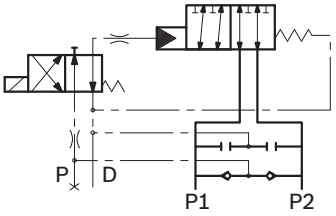

Spool variants

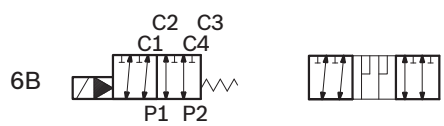

1) For connectors ordering code see data sheet RE 18325-90.

Functional description

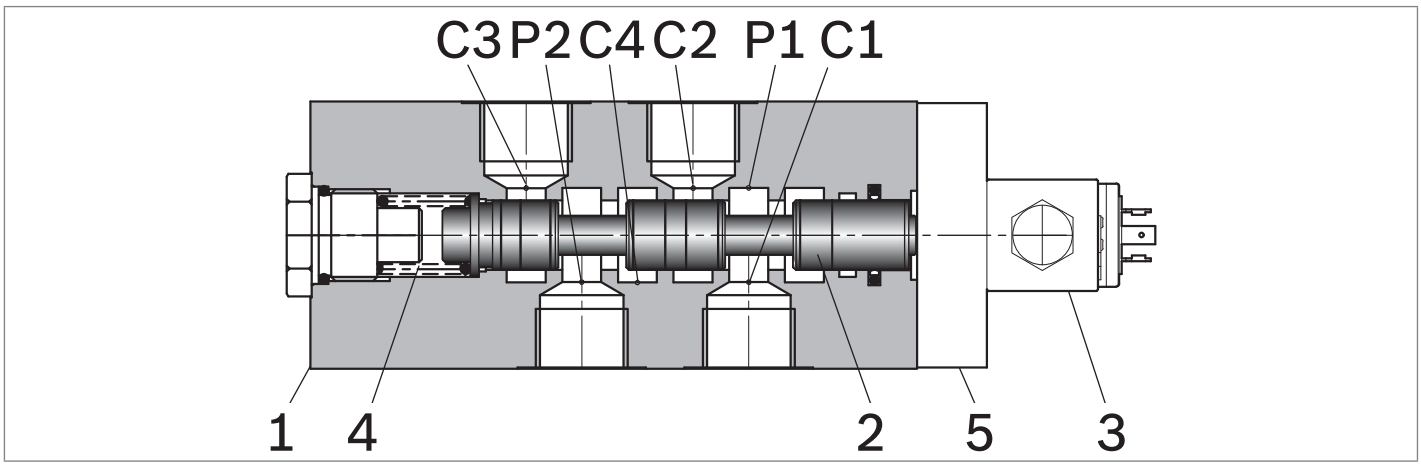

A valve basically consists of a housing (**1**), a control spool (**2**), a return spring (**4**), a 4/2 solenoid valve (**3**), a face mounted plate for optional drain and/or external hydraulic pilot.
The valve is designed to connect two inlet lines **P1** – **P2** (normally a set of hoses) and divert them to either the outlet ports (**C1** – **C4**) with spool in position "**0**", when the solenoid is de-energized, or to the outlet ports (**C2** – **C3**) with spool in position "**1**", when the solenoid is energized.
In fact, energizing the solenoid valve (**3**), the pilot pressure, after exceeding the 18 bar (261 psi) threshold, pushes the control spool (**2**) from position "**0**" into position "**1**".
With the solenoid de-energized, the return spring (**4**) pushes back the spool (**2**) and holds it in position "**0**".
The coil of the solenoid valve is fastened to the tube by a ring nut.

Technical data

General		
Valve weight	kg (lbs)	15.2 (33.5)
Mounting position		unrestricted
Ambient Temperature	°C (°F)	–20....+50 (-4....+122) (NBR seals)
Hydraulic		
Maximum operating pressure with external drain	bar (psi)	310 (4500)
Maximum operating pressure with internal drain	bar (psi)	210 (3045)
Maximum inlet flow	l/min (gpm)	220 (58.1)
Minimum pilot pressure	bar (psi)	18 (261)
Internal pilot switching pressure between P1 and P2	bar (psi)	18 (261)
Hydraulic fluid General properties: it must have physical lubricating and chemical properties suitable for use in hydraulic systems such as, for example:		Mineral oil based hydraulic fluids HL (DIN 51524 part 1). Mineral oil based hydraulic fluids HLP (DIN 51524 part 2). For use of environmentally acceptable fluids (vegetable or polyglycol base) please consult us.
Fluid Temperature	°C (°F)	–20....+80 (-4....+176) (NBR seals)
Permissible degree of fluid contamination		ISO 4572: $\beta_x \geq 75$ X = 12...15 ISO 4406: class 20/18/15 NAS 1638: class 9
Viscosity range	mm^2/s	5....420
Internal leakage with 100 bar (1450 psi) secondary pressure at C	cc/min (in^3/min)	min.20 (1.2) max. 60 (3.6)

Electrical							
Voltage type		DC					
Voltage tolerance (nominal voltage)	%	-10 .... +10					
Duty		Continuous (100%), with ambient temperature ≤ 50°C (122°F)					
Coil wire temperature not to be exceeded	°C (°F)	150 (302)					
Insulation class		H					
Compliance with		Low Voltage Directive LVD 73/23/EC (2006/95/EC), 2004/108/EC					
Coil weight with connection EN 175301-803	kg (lbs)	0.215 (0.44)					
Voltage	V	12	13	24	27	48	110
Voltage type		DC	DC	DC	DC	DC	DC
Power consumption	W	26	26	26	26	26	26
Current (nominal at 20 °C (68 °F))	A	2.15	2.00	1.10	1.00	0.54	0.27
Resistance (nominal at 20 °C (68 °F))	Ω	5.5	6.5	22	28	89	413

Note
For applications with different specifications consult us

Code	Voltage (V)	Connector type	Coil description	Marking	Coil Mat no.
OB 01	12 DC	EN 175301- 803 (Ex. DIN 43650)	C3601 12DC	12 DC	R933000044
OB 03	12 DC	AMP JUNIOR	C3603 12DC	12 DC	R933000047
OB 04	12 DC	AMP JUNIOR Horizontal	C3604 12DC	12 DC	R933002913
OB 07	12 DC	DEUTSCH DT 04-2P	C3607 12DC	12 DC	R933000048
OB 31	12 DC	Cable 350 mm long	C3631 12DC	12 DC	R933000045
AD 01	13 DC	EN 175301-803 (Ex. DIN 43650)	C3601 13DC	13 DC	R933000051
AD 07	13 DC	DEUTSCH DT 04-2P	C3607 13DC	13 DC	R933000049
OC 01	24 DC	EN 175301-803 (Ex. DIN 43650)	C3601 24DC	24 DC	R933000053
OC 03	24 DC	AMP JUNIOR	C3603 24DC	24 DC	R933000057
OC 04	24 DC	AMP JUNIOR Horizontal	C3604 24DC	24 DC	R933002914
OC 07	24 DC	DEUTSCH DT 04-2P	C3607 24DC	24 DC	R933000058
OC 31	24 DC	Cable 350 mm long	C3637 24DC	24 DC	R933000055
AC 01	27 DC	EN 175301-803 (Ex. DIN 43650)	C3601 27DC	27 DC	R933000056
AC 07	27 DC	DEUTSCH DT 04-2P	C3607 27DC	27 DC	R933000050
OD 01	48 DC	EN 175301-803 (Ex. DIN 43650)	C3601 48DC	48 DC	R933000059
OD 04	48 DC	AMP JUNIOR Horizontal	C3604 48DC	48 DC	R933002915
OE 01	110 DC	EN 175301-803 (Ex. DIN 43650)	C3601 110DC	110 DC	R933000061

Characteristic curves

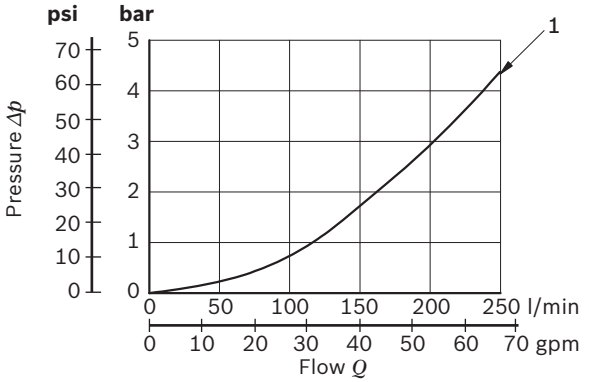

Flow path	Curve No.
P1>C1	1
P1>C2	1
P2>C3	1
P2>C4	1

Measured with hydraulic fluid ISO-VG32 at 45° ±5 °C (113° ±9 °F); ambient temperature 20 °C (68 °F).

Performance limits

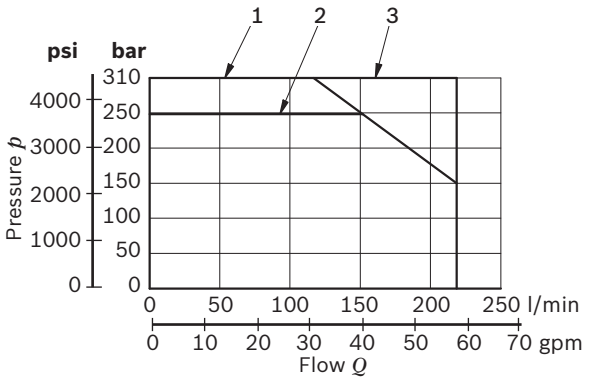

Curve 1: External drain; pilot pressure 18 bar (261 psi)
Curve 2: Internal drain; pilot pressure 18 bar (261 psi)
Curve 3: External drain; pilot pressure 30 bar (435 psi)

External dimensions and fittings

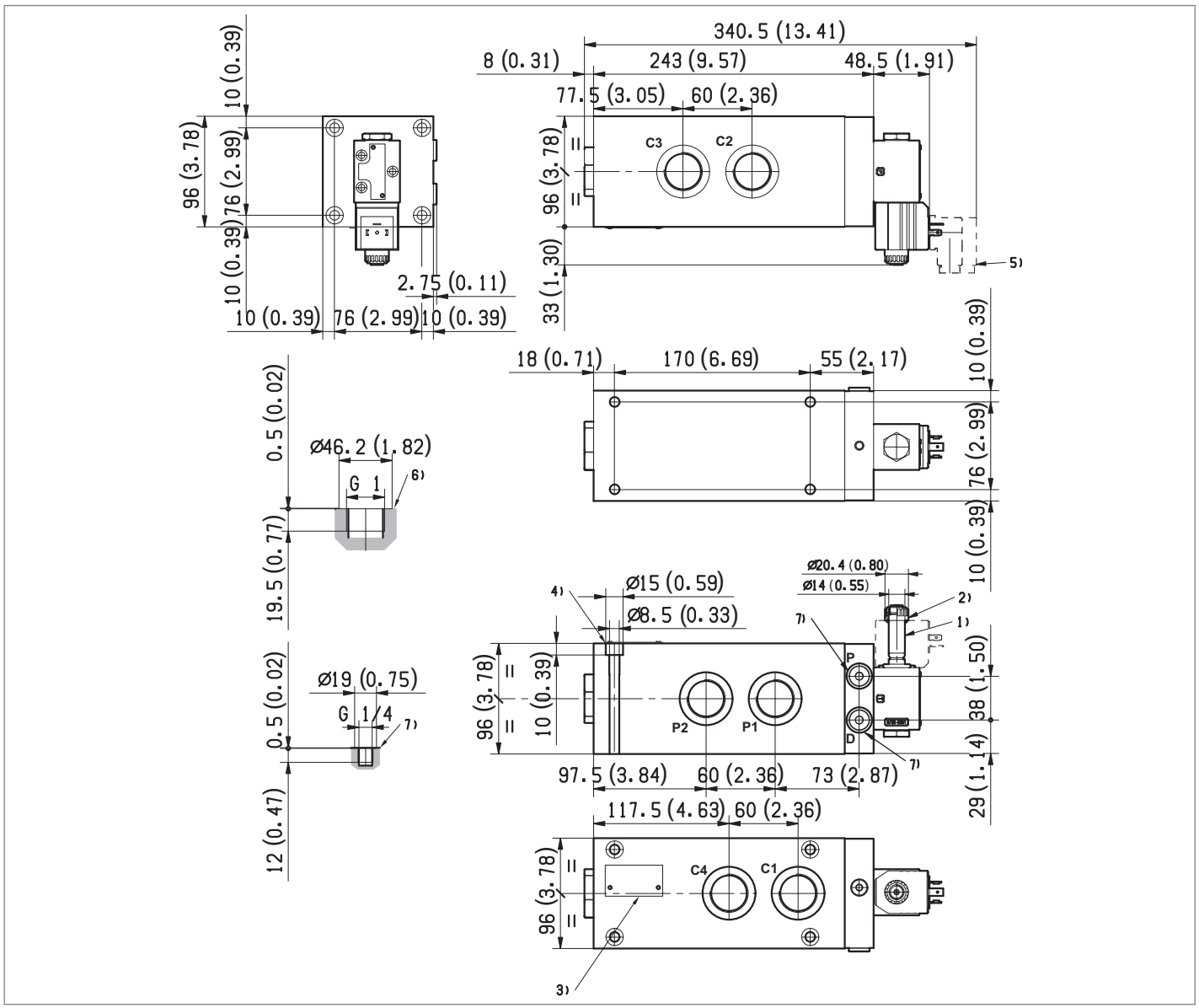

1 Solenoid tube Ø 14 mm (0.55 inch).
2 Ring nut for coil locking Ø 20.5 mm (0.80 inch).
Torque 3-4 Nm (2.2-3.0 ft-lb).
3 Identification label.
4 Four through installation holes reccomended screws M8 with strength class DIN 8.8.
Torque 20 – 22 Nm (14.6 – 16.2 ft-lb).
5 Minimum clearance needed for connector removal.
6 Ports P1, P2, C1, C2, C3, C4.
7 Pilot and drain ports P, D

Electric connection

00

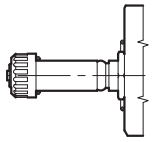

01

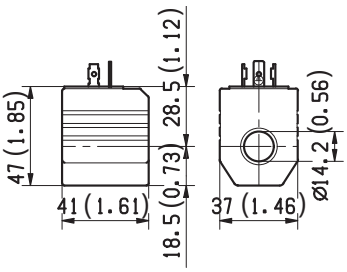

03 Protection class: IP 65 with female connector properly fitted (see drawing).

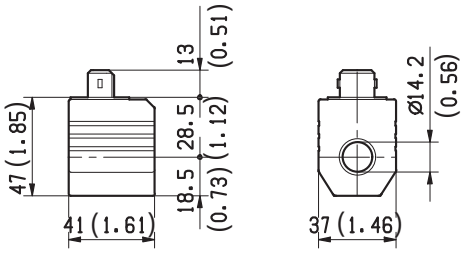

04 Protection class: IP 65 with female connector properly fitted (see drawing).

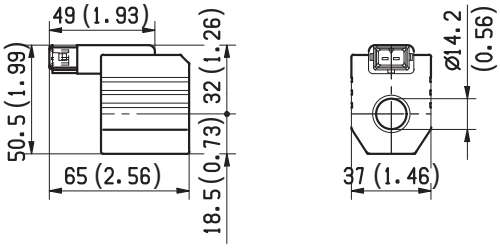

31

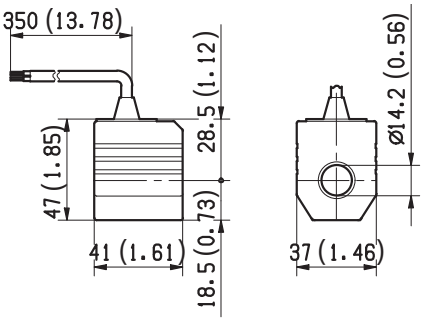

07 Protection class: IP 69 K with female connector properly fitted (see drawing).

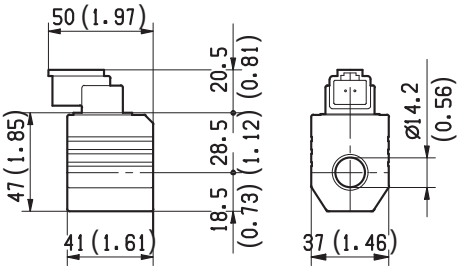

Flow diverters

6 up to 14/2 ways/positions bankable

Designation	Description	Ports/Size	Code	Data sheet	Page
6 to 12/2 ways/positions bankable flow diverters flangeable	VS120F, VS125F	G 1/4, SAE 4 / Size 4	L711_	18302-08	841
6 to 14/2 ways/positions bankable flow diverters flangeable	VS241F, VS245F, VS246F, VS247F	G 3/8, SAE 8, M18x1,5 / Size 6	L732_	18302-09	849
6 to 14/2 ways/positions bankable flow diverters flangeable	VS270F	G 3/8, G 1/2, SAE 10 / Size 8	L739_	18302-12	859
6 to 14 ways/positions bankable flow diverters flangeable	VS281F, VS285F, VS286F, VS287F, VS289F	G 1/2, SAE 10, M18x1,5, JIS B 1/2, M22x1,5 /Size 10	L745_	18302-10	869

6 to 12/2 ways/positions bankable flow diverters flangeable L711... (VS120F-VS125F)

Size 4
Series 00
Maximum operating pressure 310 bar (4500 psi)
Maximum flow 20 l/min (5.3 gpm)
Ports G 1/4 - SAE4

General specifications

6 way 2 position valve.
Directional spool valve with direct solenoid control.
Hydraulic / pneumatic pilot availabe as option.
Usable as stand-alone, or as multiple stackable units.
Control spool operated by solenoid, with easily removable coil fastened by a ring nut.
Wet pin tube for DC coil, with push rod for mechanical override in case of voltage shortage.
Unrestricted 360° orientation of DC coil.
Control spool held in normal position by return spring.
Optional manual override (push-button or screw type).
Connectors available: DIN 43650 – ISO 4400, AMP Junior, DT04-2P (Deutsch), Free leads.

Contents

Ordering details	2
Symbols	2
Functional description	3
Technical data	3
Characteristic curves	5
External dimensions and fittings	6
Electric connection	7

RE 18301-08/05.2011, Bosch Rexroth AG

Ordering details

01	02		03	04	05	06	07	08	09
L	**7**	**11**							

Family

01	Compact directional valve	**L**

Type

02	Flow diverters	**7**

Ports

03	G 1/4 DIN 3852	**2**
	7/16-20 UNF(SAE4)	**A**

Control type

04	Solenoid (coil C36) without manual override	**10**
	Solenoid (coil C36) with push-button type manual override	**1P**
	Solenoid (coil C36) with screw type manual override	**1F**
	Hydraulic / pneumatic control [1]	**P1**

Spool variants

05	6 way / 2 position P1 side	**6_**
	6 way / 2 position P2 side	**7_**

Drain type		**6A**	**7A**	**6C**	**7C**	**6E**	**7E**	
06	Internal drain	●	●	●	●	–	–	**I**
	External drain	●	●	●	●	●	●	**E**

Voltage supply		**31**	**07**	**04**	**03**	**01**	**00**	
07	Without coil	–	–	–	–	–	●	**00**
	12 V DC	●	●	●	●	●	–	**OB**
	13 V DC	–	●	–	–	●	–	**AD**
	24 V DC	●	●	●	●	●	–	**OC**
	27 V DC	–	●	–	–	●	–	**AC**
	48 V DC	–	–	●	–	●	–	**OD**
	110 V DC	–	–	–	–	●	–	**OE**

Electric connections

08	Without coils	**00**
	With coils, without mating connector DIN EN 175301-803 [2]	**01**
	With coils, with bi-directional diode, without mating connector vertical Amp-Junior	**03**
	With coils, with bi-directional diode, without mating connector horizontal Amp-Junior	**04**
	With coils, with bi-directional diode, without mating connector DT04-2P	**07**
	With coils and bipolar sheathed lead 350mm (13,8 in) long	**31**

Assembly

09	Single diverter	**0**
	2 Pre-assembled diverters	**2**
	3 Pre-assembled diverters	**3**
	4 Pre-assembled diverters	**4**

● = Available – = Not available

Symbols

Drain type I

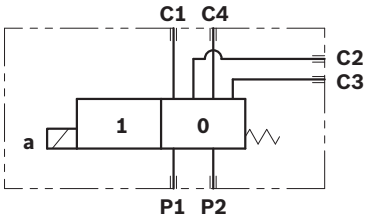

Drain type E

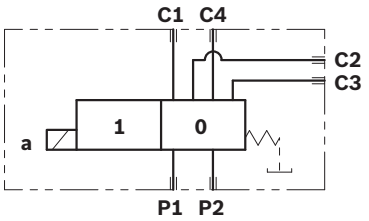

Spool variants

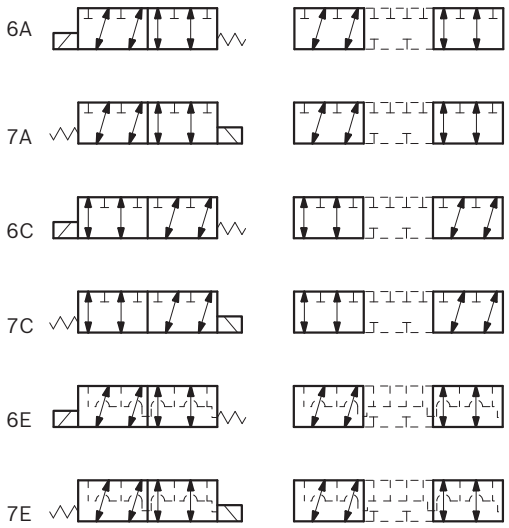

1) Minimum pressure 4 bar (58psi) with external drain (E), maximum pressure 200 bar (2901psi). With internal drain (I), at the minimum pressure (4 bar - 58psi), add the working pressure with ratio of 6,5:1. Example: With working pressure 100 bar (1450psi), minimum pilot pressure is 19.38 bar (281psi) ((100:6,5) + 4 bar (58psi)).

2) For connectors ordering code see data sheet RE 18325-90.

Functional description

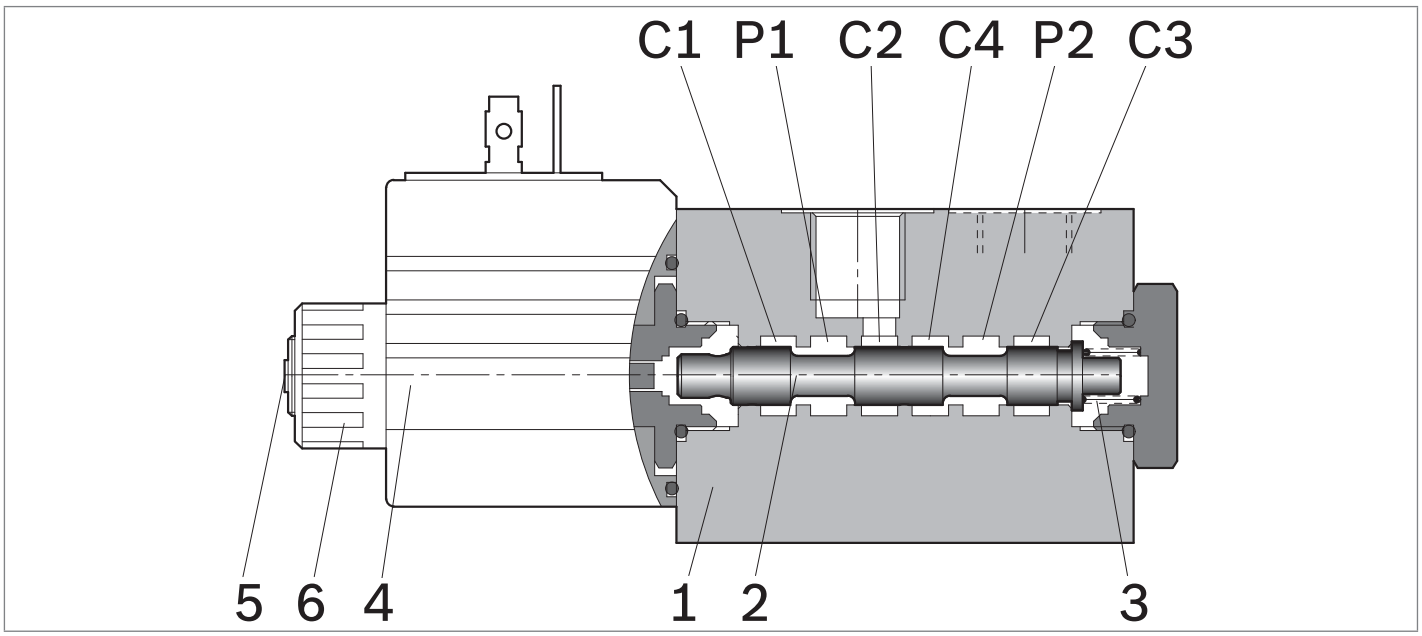

A valve basically consists of a housing (**1**), a control spool (**2**), a return spring (**3**) and a solenoid (**4**). It is designed to connect two inlet lines **P1** – **P2** (normally a set of hoses) and divert them to either the outlet ports (**C1** – **C4**) with spool in position "**0**", when the solenoid is de-energized, or to the outlet ports (**C2** – **C3**) with spool in position "**1**", when the solenoid is energized.

With the coil de-energized, the return spring (**3**) pushes back the spool (**2**) and holds it in position "**0**".
The coil (**4**) is fastened to the tube by the ring nut (**6**).
The manual override (**5**) allows to shift the spool (**2**) also in case of voltage shortage.
Hydraulic / pneumatic pilot control for spool shifting is available upon request.

Technical data

General		
Valve weight	kg (lbs)	1.13 (2.5)
Mounting position		unrestricted
Ambient Temperature	°C (°F)	–20....+50 (-4....+122) (NBR seals)
Hydraulic		
Maximum pressure with external drain ("E" type)	bar (psi)	310 (4500)
Maximum pressure with internal drain ("I" type)	bar (psi)	250 (3625)
Maximum inlet flow	l/min (gpm)	20 (5.3)
Hydraulic fluid General properties: it must have physical lubricating and chemical properties suitable for use in hydraulic systems such as, for example:		Mineral oil based hydraulic fluids HL (DIN 51524 part 1). Mineral oil based hydraulic fluids HLP (DIN 51524 part 2). For use of environmentally acceptable fluids (vegetable or polyglycol base) please consult us.
Fluid Temperature	°C (°F)	–20....+80 (-4....+176) (NBR seals)
Permissible degree of fluid contamination		ISO 4572: $\beta_x \geq 75$ X = 12...15 ISO 4406: class 20/18/15 NAS 1638: class 9
Viscosity range	mm^2/s	5....420
Internal leakage with 100 bar (1450 psi) secondary pressure at C	cc/min (in^3/min)	min.7 (0.43) max. 15 (0.74)

Electrical							
Voltage type		DC					
Voltage tolerance (nominal voltage)	%	-10 .... +10					
Duty		Continuous, with ambient temperature ≤ 50°C (122°F)					
Coil wire temperature not to be exceeded	°C (°F)	150 (302)					
Insulation class		H					
Compliance with		Low Voltage Directive LVD 73/23/EC (2006/95/EC), 2004/108/EC					
Coil weight with connection EN 175301-803	kg (lbs)	0.215 (0.44)					
Voltage	V	12	13	24	27	48	110
Voltage type		DC	DC	DC	DC	DC	DC
Power consumption	W	26	26	26	26	26	26
Current (nominal at 20 °C (68 °F))	A	2.15	2.00	1.10	1.00	0.54	0.27
Resistance (nominal at 20 °C (68 °F))	Ω	5.5	6.5	22	28	89	413

Note
For applications with different specifications consult us

Code	Voltage (V)	Connector type	Coil description	Marking	Coil Mat no.
OB 01	12 DC	EN 175301- 803 (Ex. DIN 43650)	C3601 12DC	12 DC	R933000044
OB 03	12 DC	AMP JUNIOR	C3603 12DC	12 DC	R933000047
OB 04	12 DC	AMP JUNIOR Horizontal	C3604 12DC	12 DC	R933002913
OB 07	12 DC	DEUTSCH DT 04-2P	C3607 12DC	12 DC	R933000048
OB 31	12 DC	Cable 350 mm long	C3631 12DC	12 DC	R933000045
AD 01	13 DC	EN 175301-803 (Ex. DIN 43650)	C3601 13DC	13 DC	R933000051
AD 07	13 DC	DEUTSCH DT 04-2P	C3607 13DC	13 DC	R933000049
OC 01	24 DC	EN 175301-803 (Ex. DIN 43650)	C3601 24DC	24 DC	R933000053
OC 03	24 DC	AMP JUNIOR	C3603 24DC	24 DC	R933000057
OC 04	24 DC	AMP JUNIOR Horizontal	C3604 24DC	24 DC	R933002914
OC 07	24 DC	DEUTSCH DT 04-2P	C3607 24DC	24 DC	R933000058
OC 31	24 DC	Cable 350 mm long	C3637 24DC	24 DC	R933000055
AC 01	27 DC	EN 175301-803 (Ex. DIN 43650)	C3601 27DC	27 DC	R933000056
AC 07	27 DC	DEUTSCH DT 04-2P	C3607 27DC	27 DC	R933000050
OD 01	48 DC	EN 175301-803 (Ex. DIN 43650)	C3601 48DC	48 DC	R933000059
OD 04	48 DC	AMP JUNIOR Horizontal	C3604 48DC	48 DC	R933002915
OE 01	110 DC	EN 175301-803 (Ex. DIN 43650)	C3601 110DC	110 DC	R933000061

Characteristic curves

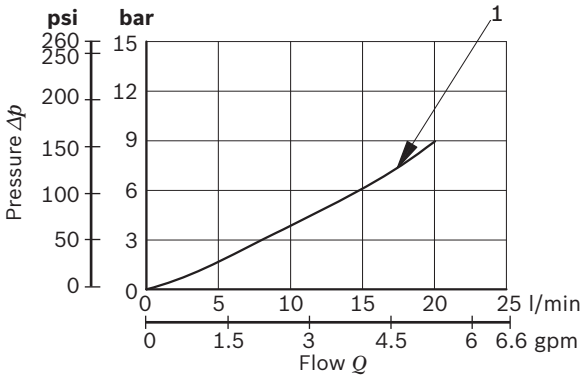

Flow path	Curve no.
P1 > C1	1
P1 > C2	1
P2 > C3	1
P2 > C4	1

Measured with hydraulic fluid ISO-VG32 at 45° ±5 °C (113° ±9 °F); ambient temperature 20 °C (68 °F).

DI-DE performance limits

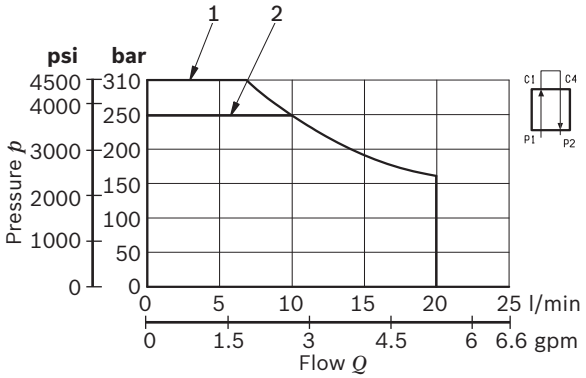

Drain type	Curve No.
External (-E-)	1
Internal (-I-)	2

Flow across both ways: forward across P1>C1 and reverse across C4>P2

External dimensions and fittings

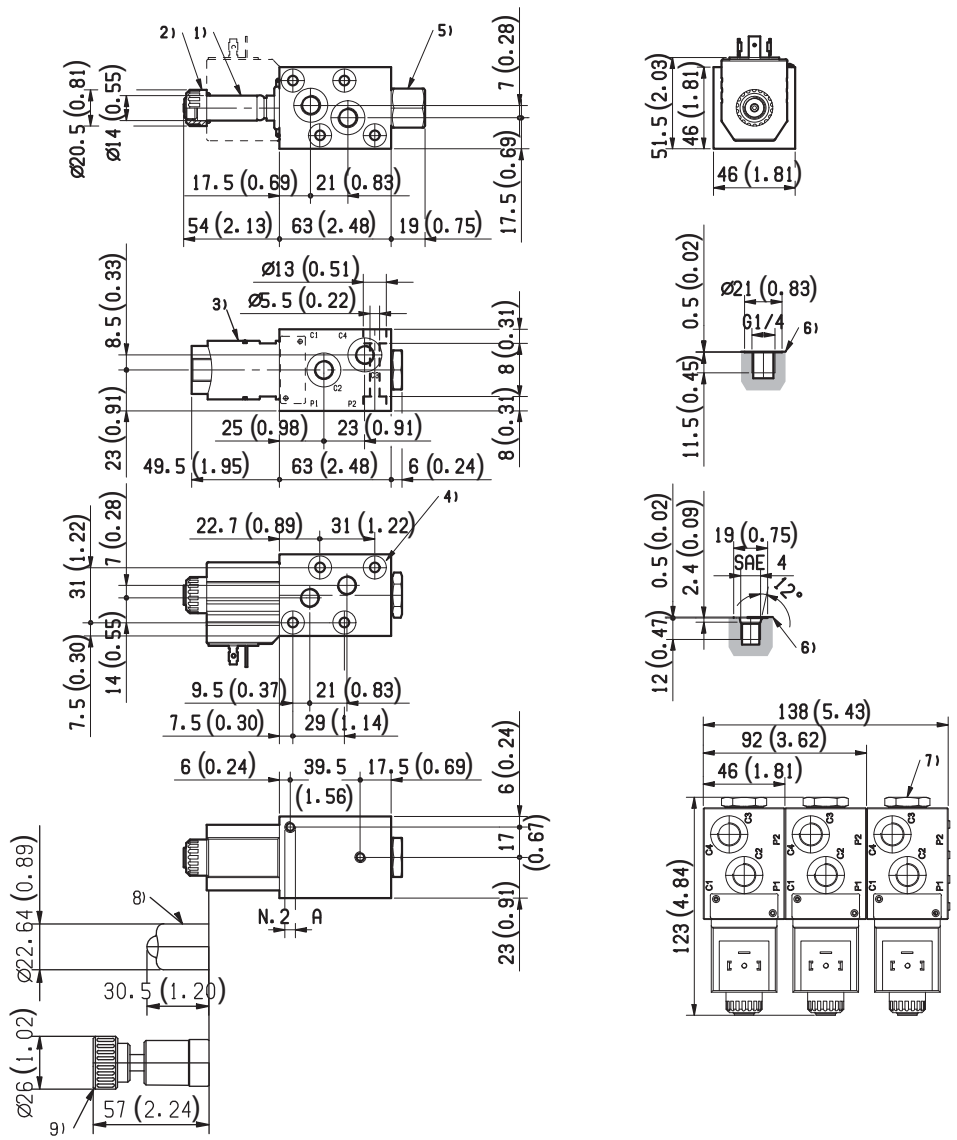

1 Solenoid tube Ø 14 mm (0.55 inch).
2 Ring nut for coil locking Ø 20.5 mm (1.04 inch). Torque 3-4 Nm (2.2-3.0 ft-lb).
3 Optional hydraulic / pneumatic piloted version. Pilot port plug available with G 1/4.
4 Identification label.
5 Minimum clearance needed for connector removal.
6 Optional push-button, 1P type, manual override for spool opening: it is pressure stuck to the ring nut for coil locking. Mat no. R933000042.
7 Optional screw, 1F type, manual override for spool opening: it is screwed (torque 6-7 Nm (4.4-5.5 ft-lb)) to the tube as replacement of the coil ring nut. Mat no. R933000021.
8 Ports P1, P2, C1, C2, C3, C4.
9 External drain plug available with G 1/4 and SAE 4 port.
10 Two through holes, for installation use M5 screws with strength class DIN 8.8. Torque 5-6 Nm (3.6-4.4 ft-lb).

Measure	VS120 F (G1/4)	VS125 F (SAE 4)
A	M6	1/4” - 20 UNC

Total stacked units	Total length	Total rods length	Torque (Nm/ft-lb)
2	92 (3.62)	85 (3.34)	6 (4.4)
3	138 (5.4)	130 (5.11)	6 (4.4)
4	184 (7.2)	175 (6.88)	6 (4.4)

Electric connection

00

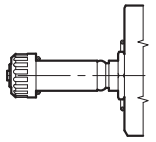

01

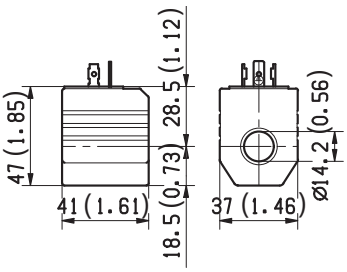

03 Protection class: IP 65 with female connector properly fitted (see drawing).

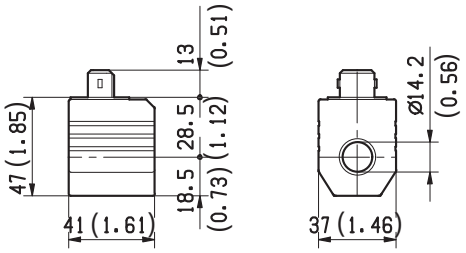

04 Protection class: IP 65 with female connector properly fitted (see drawing).

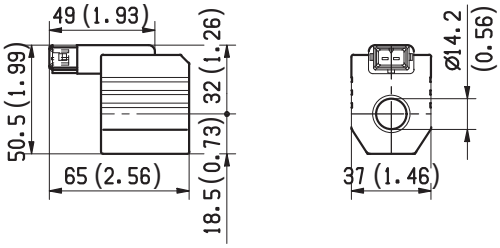

31

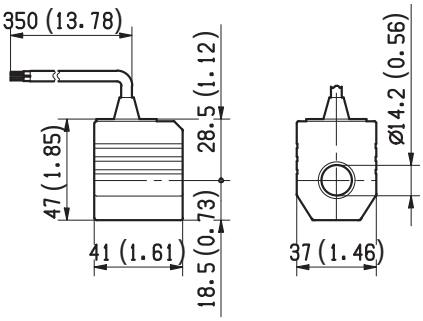

07 Protection class: IP 69 K with female connector properly fitted (see drawing).

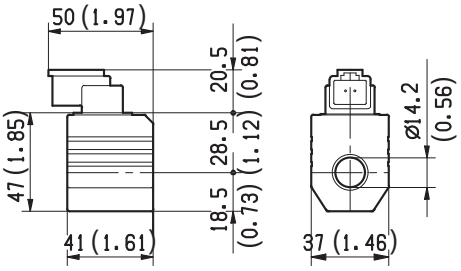

3

6 to 14/2 ways/positions bankable flow diverters flangeable L732.... (VS241F-VS245F-VS246F-VS247F)

Size 6
Series 00
Maximum operating pressure 310 bar (4500 psi)
Maximum flow 50 l/min (13.2 gpm)
Ports G 3/8 - SAE8 - M18x1,5

General specifications

6 way 2 position valve.
Directional spool valve with direct solenoid control.
Hydraulic / pneumatic pilot, or manual push and twist control available ad option.
Usable as stand-alone, or as multiple stackable units.
Control spool operated by solenoid, with easily removable coil fastened by a ring nut.
Wet pin tube for DC coil, with push rod for mechanical override in case of voltage shortage.
Unrestricted 360° orientation of DC coil.
Control spool held in normal position by return spring.
Optional manual override (push-button or screw type).
Connectors available: DIN 43650 – ISO 4400, AMP Junior, DT04-2P (Deutsch), Free leads.

Contents

Ordering details	2
Symbols	2
Functional description	3
Technical data	3
Characteristic curves	5
External dimensions and fittings	6
Electric connection	9

RE 18301-09/02.2012 Bosch Rexroth AG

Ordering details

01	02		03	04	05	06	07	08	09
L	**7**	**32**							

Family

01	Compact directional valve	**L**

Type

02	Flow diverters	**7**

Ports

03	G 3/8 DIN 3852	**3**
	3/4” - 16 UNF (SAE8)	**C**
	M18x1.5 UNI-ISO 6149-1	**Y**
	M18x1.5 DIN 3852	**Z**

Control type

04	Solenoid (coil C48) without manual override	**11**
	Solenoid (coil C48) with push-button type manual override	**1P**
	Solenoid (coil C48) with screw type manual override	**1F**
	Hydraulic / pneumatic control [1]	**P1**
	Manual push and twist control	**H1**

Spool variants

05	6 way / 2 position P1 side	**6_**

Drain type		**6B**	**6D**	**6E**	**6F**	**6G**	**6H**	
06	Internal drain	●	●	–	●	●	●	**I**
	External drain	●	●	●	–	–	–	**E**

Voltage supply		**31**	**07**	**03**	**01**	**00**	
07	Manual push and twist control	–	–	–	–	–	**SG**
	Without coil	–	–	–	–	●	**00**
	12 V DC	●	●	●	●	–	**OB**
	13 V DC	–	●	–	●	–	**AD**
	24 V DC	●	●	●	●	–	**OC**
	27 V DC	–	●	–	●	–	**AC**
	48 V DC	–	–	–	●	–	**OD**

Electric connections

08	Without coils	**00**
	With coils, without mating connector DIN EN 175301-803 [2]	**01**
	With coils, with bi-directional diode, without mating connector vertical Amp-Junior	**03**
	With coils, with bi-directional diode, without mating connector DT04-2P	**07**
	With coils and bipolar sheathed lead 350mm (13,8 in) long	**31**

Assembly

09	Single diverter	**0**
	2 Pre-assembled diverters	**2**
	3 Pre-assembled diverters	**3**
	4 Pre-assembled diverters	**4**
	5 Pre-assembled diverters	**5**

● = Available – = Not available

Symbols

Drain type I

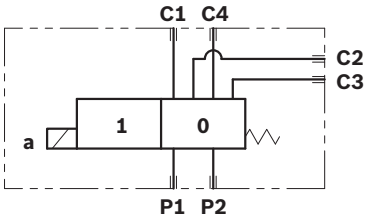

Drain type E

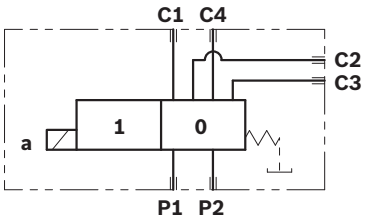

Spool variants

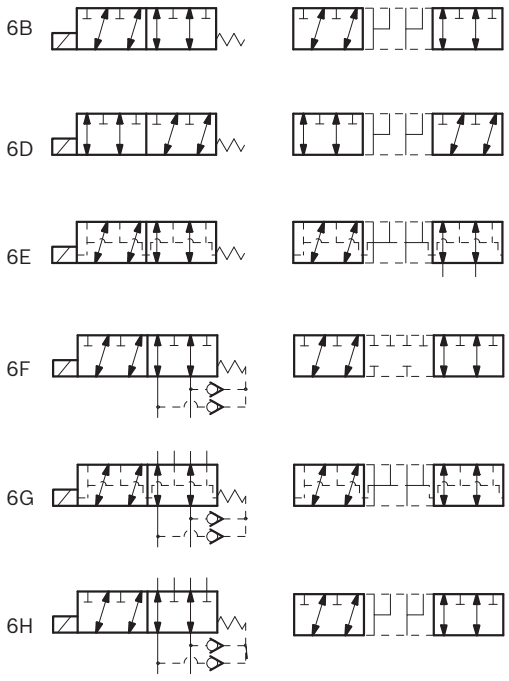

1) Minimum pressure 4 bar (58psi) with external drain (E), maximum pressure 200 bar (2901psi). With internal drain (I), at the minimum pressure (4 bar - 58psi), add the working pressure with ratio of 6,5:1. Example: With working pressure 100 bar (1450psi), minimum pilot pressure is 19.38 bar (281psi) ((100:6,5) + 4 bar (58psi)).

2) For connectors ordering code see data sheet RE 18325-90.

Functional description

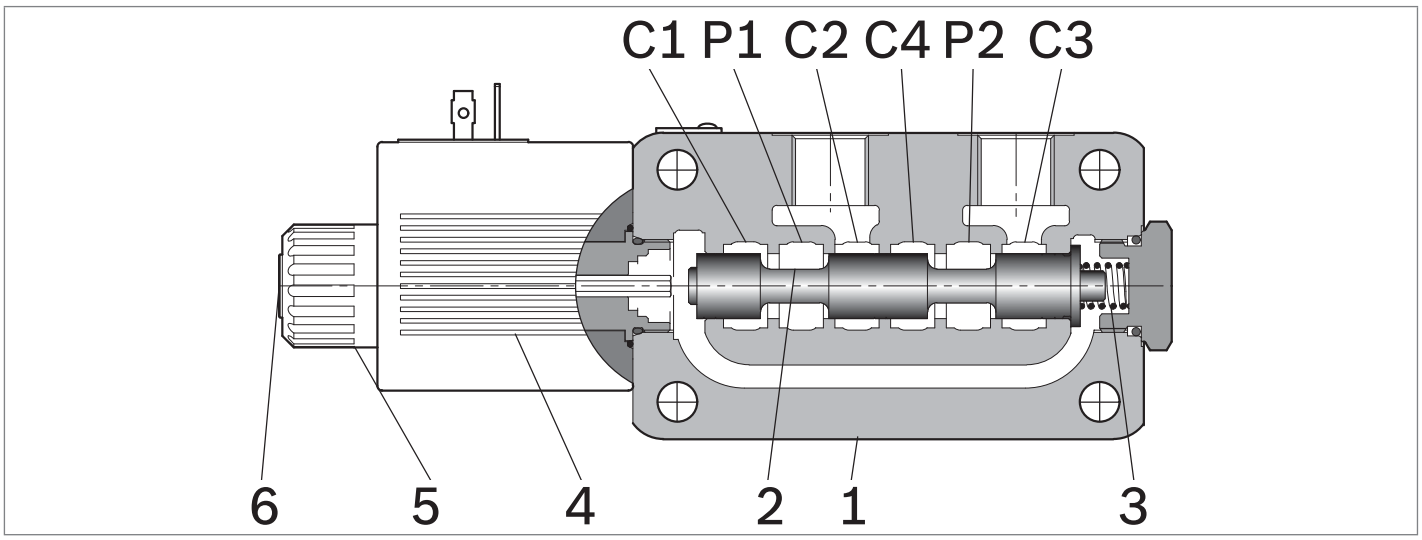

A valve basically consists of a housing (**1**), a control spool (**2**), a return spring (**3**) and a solenoid (**5**). It is designed to connect two inlet lines **P1** – **P2** (normally a set of hoses) and divert them to either the outlet ports (**C1** – **C4**) with spool in position "**0**", when the solenoid is de-energized, or to the outlet ports (**C2** – **C3**) with spool in position "**1**", when the solenoid is energized.
With the coil de-energized, the return spring (**3**) pushes back the spool (**2**) and holds it in position "**0**"
The coil (**5**) is fastened to the tube by the ring nut (**6**).
The manual override (**6**) allows to shift the spool (**2**) also in case of voltage shortage.
An external drain, to be connected to tank, ensures shifting operations also at higher working pressure.
Hydraulic / pneumatic pilot control, or manual push and twist control for spool shifting are available upon request.

3

Technical data

General		
Valve weight	kg (lbs)	3.2 (7.06)
Mounting position		unrestricted
Ambient Temperature	°C (°F)	–20....+50 (-4....+122) (NBR seals)
Hydraulic		
Maximum pressure with external drain ("E" type)	bar (psi)	310 (4500)
Maximum pressure with internal drain ("I" type)	bar (psi)	250 (3625)
Maximum inlet flow	l/min (gpm)	50 (13.2)
Hydraulic fluid General properties: it must have physical lubricating and chemical properties suitable for use in hydraulic systems such as, for example:		Mineral oil based hydraulic fluids HL (DIN 51524 part 1). Mineral oil based hydraulic fluids HLP (DIN 51524 part 2). For use of environmentally acceptable fluids (vegetable or polyglycol base) please consult us.
Fluid Temperature	°C (°F)	–20....+80 (-4....+176) (NBR seals)
Permissible degree of fluid contamination		ISO 4572: $\beta_x \geq 75$ X = 12...15 ISO 4406: class 20/18/15 NAS 1638: class 9
Viscosity range	mm^2/s	5....420
Internal leakage with 100 bar (1450 psi) secondary pressure at C	cc/min (in^3/min)	min.10 (0.61) max. 25 (1.52)

Electrical						
Voltage type		DC				
Voltage tolerance (nominal voltage)	%	-10 .... +10				
Duty		Continuous, with ambient temperature ≤ 50°C (122°F)				
Coil wire temperature not to be exceeded	°C (°F)	150 (302)				
Insulation class		H				
Compliance with		Low Voltage Directive LVD 73/23/EC (2006/95/EC), 2004/108/EC				
Coil weight with DIN 43650 – ISO 4400 connector	kg (lbs)	0.5 (1.1)				
Voltage	V	12	13	24	27	48
Voltage type		DC	DC	DC	DC	DC
Power consumption	W	36	36	36	36	36
Current (nominal at 20 °C (68 °F))	A	3.0	2.77	1.53	1.32	0.75
Resistance (nominal at 20 °C (68 °F))	Ω	3.97	4.68	15.67	20.42	63.60

Note
For applications with different specifications consult us

Code	Voltage [V]	Connector type	Coil description	Marking	Coil Mat no.
OB 01	12 DC	EN 175301-803 (Ex. DIN 43650)	C4801 12DC	12 DC	R933000063
OB 03	12 DC	AMP JUNIOR	C4803 12DC	12 DC	R933000065
OB 07	12 DC	DEUTSCH DT 04-2P	C4807 12DC	12 DC	R933000068
OB 31	12 DC	Cable 350 mm long	C4831 12DC	12 DC	R933000064
AD 01	13 DC	EN 175301-803 (Ex. DIN 43650)	C4801 13DC	13 DC	R933000069
AD 07	13 DC	DEUTSCH DT 04-2P	C4807 13DC	13 DC	R933000073
OC 01	24 DC	EN 175301-803 (Ex. DIN 43650)	C4801 24DC	24 DC	R933000076
OC 03	24 DC	AMP JUNIOR	C4803 24DC	24 DC	R933000071
OC 07	24 DC	DEUTSCH DT 04-2P	C4807 24DC	24 DC	R933000075
OC 31	24 DC	Cable 350 mm long	C4831 24DC	24 DC	R933000070
AC 01	27 DC	EN 175301-803 (Ex. DIN 43650)	C4801 27DC	27 DC	R933000077
AC 07	27 DC	DEUTSCH DT 04-2P	C4807 27DC	27 DC	R933000074
OD 01	48 DC	DIN EN 175301-803 ISO 4400	C4801 48DC	48 DC	R933000078

Characteristic curves

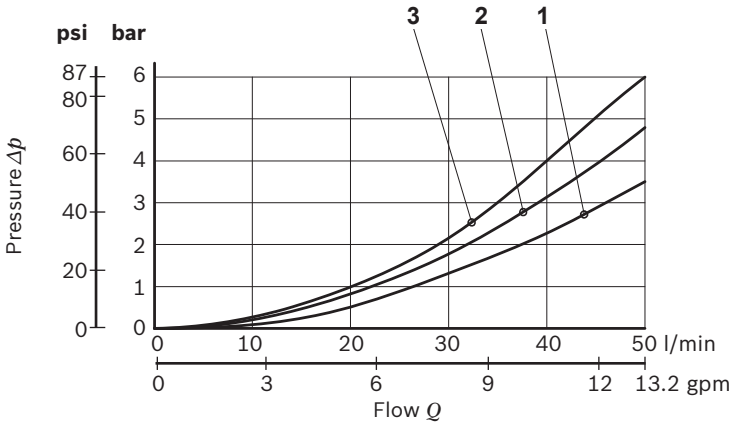

Scheme	Curve no.			
	P1>C1	P1>C2	P2>C4	P2>C3
6B - 6D - 6E - 6F - 6G - 6H	1	2	2	3

Measured with hydraulic fluid ISO-VG32 at 45° ±5 °C (113° ±9 °F); ambient temperature 20 °C (68 °F).

DI-DE performance limits

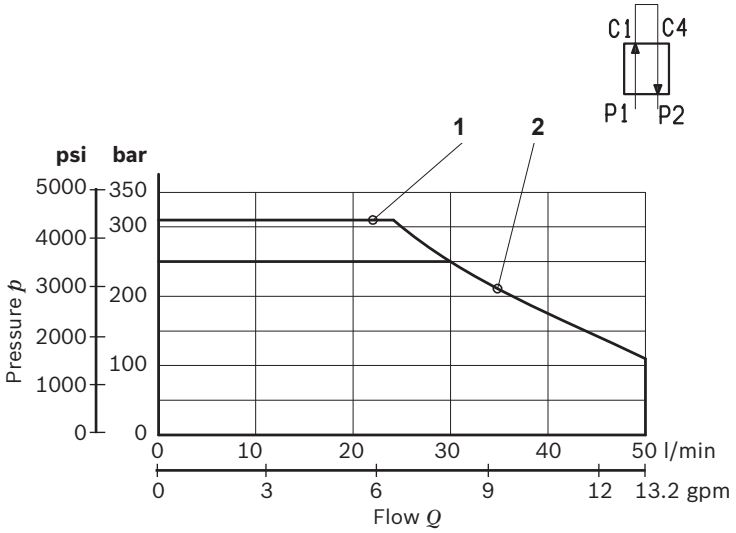

Drain type	Curve No.
External (-E-)	1
Internal (-I-)	2

Flow across both ways: forward across P1>C1 and reverse across C4>P2

3

RF 18301 09/02 2016 Bosch Rexroth AG

853

External dimensions and fittings

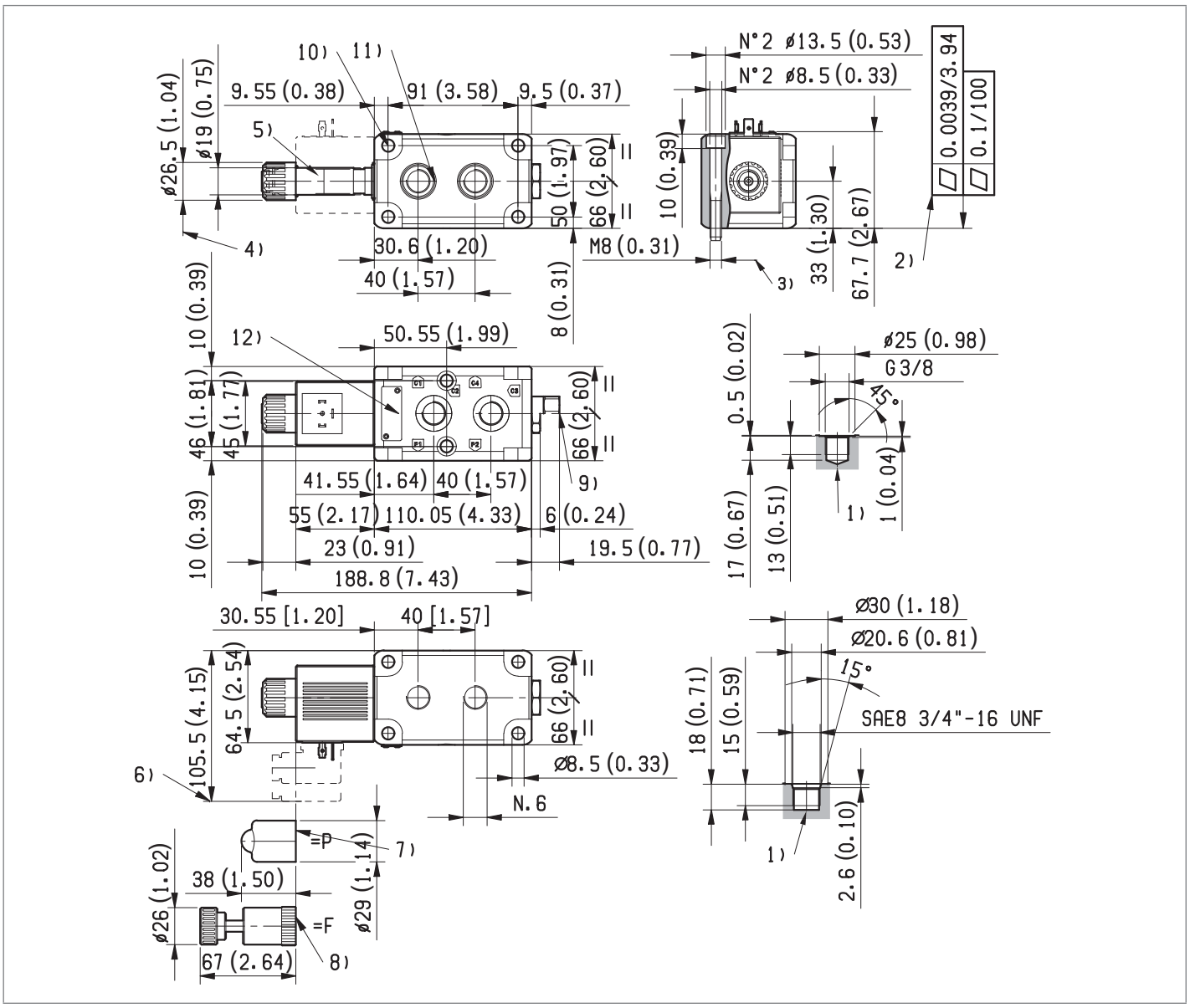

1 Ports P1, P2, C1, C2, C3, C4.
2 The mounting surface flatness must comply with specifications.
3 Two through installation holes reccomended screws M8x65 with strength class DIN 8.8. Torque 15 – 16 Nm (11,1-11,8 ft-lb).
4 Ring nut for coil locking OD 26.5 mm (1.04 inch). Torque 5-6 Nm (3.6-4.4 ft-lb).
5 Solenoid tube Ø 19 mm (0.75 inch).
6 Minimum clearance needed for connector removal.
7 Optional push-button, 1P type, manual override for spool opening: it is pressure stuck to the ring nut for coil locking. Mat no. R933000043.
8 Optional screw type manual override, 1F type, for spool opening: it is screwed (torque 6-7Nm (4.4-5.2 ft-lb)) to the tube as replacement of the coil ring nut. Mat no. R933007215.
9 External drain plug available with G 1/4 and SAE 4 port.
10 Four through holes, 8.5 mm dia., for coupling of other similar diverter valve.
11 O-Ring (NBR) for P1 and P2 ports.
12 Identification label.

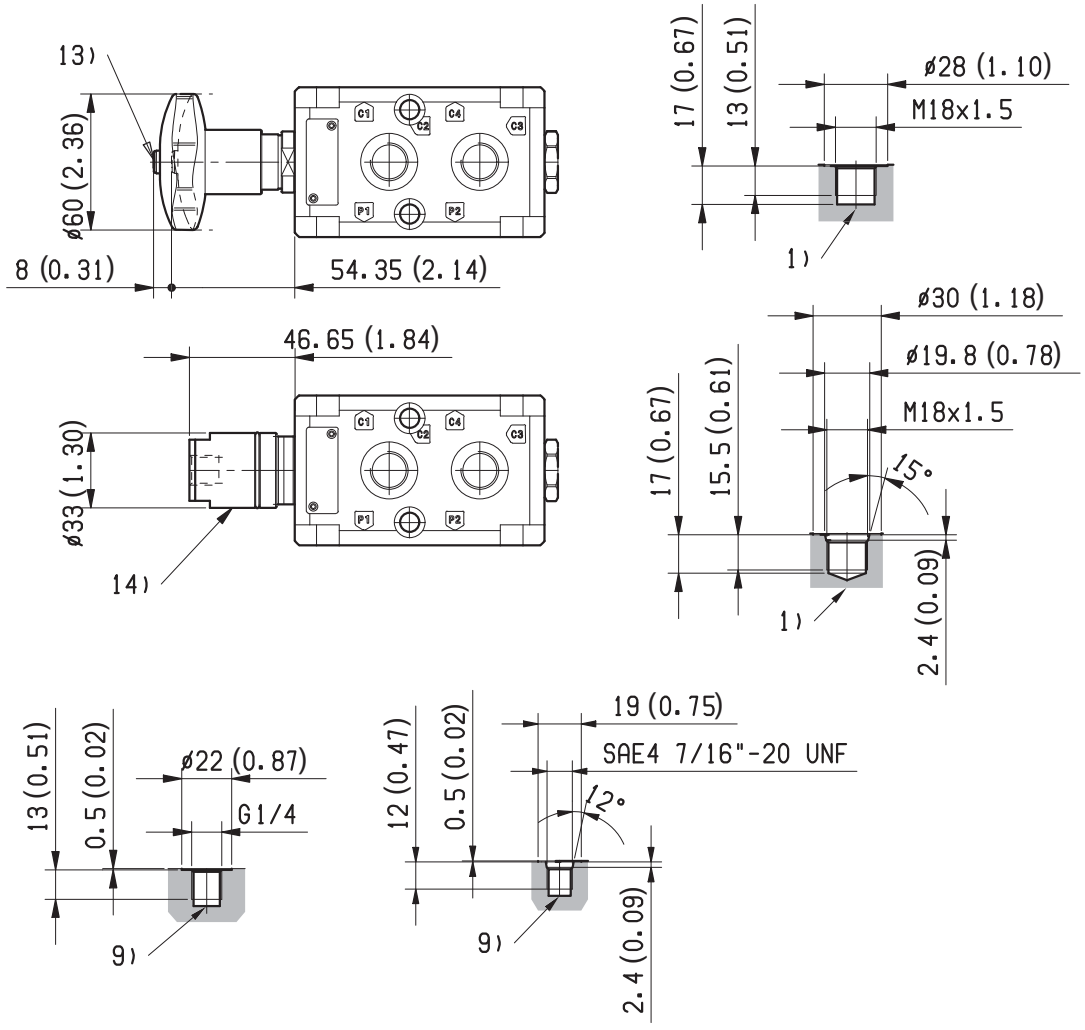

1 Ports P1, P2, C1, C2, C3, C4.
9 External drain plug available with G 1/4 and SAE 4 port.
10 Dimensions of manual version, push and twist type.
11 Dimensions of hydraulic / pneumatic piloted version.
Pilot port plug available with G 1/4.

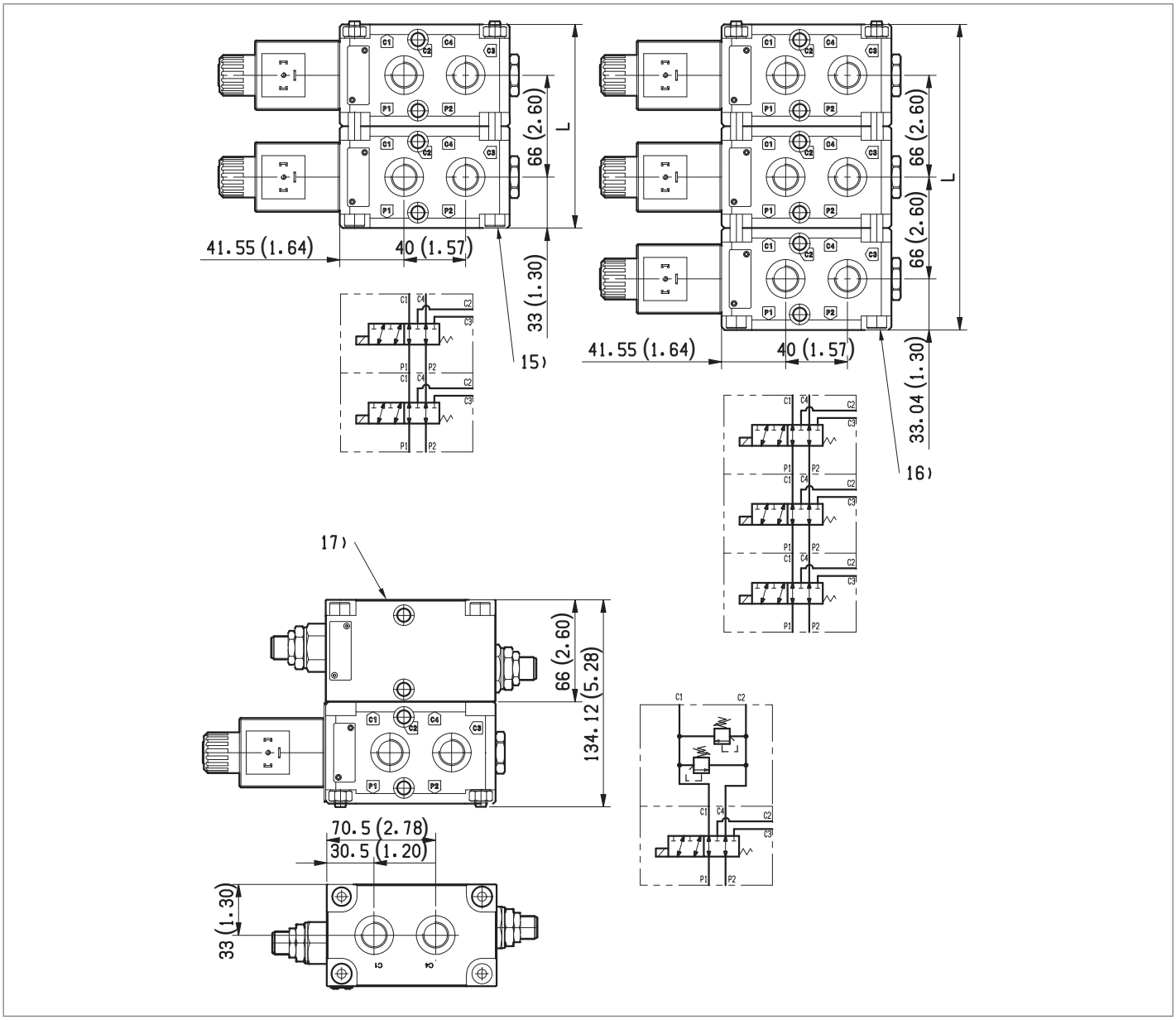

15 Four screws M8x125 DIN 912 for coupling together 2 diverter valves. Suggested bolt strength class DIN 8.8. Torque 16 – 18 Nm (11.8-13.3 ft-lb).

16 Four screws M8x190 DIN 912 for coupling together 3 diverter valves. Suggested bolt strength class DIN 8.8. Torque 16-18 Nm (11.-13.3 ft lb).

17 Modular relief valves (cartridges VMD1040SV): with G 3/8 ports, code L7313610214SV00 with SAE 8 ports, code L731C610214SV00. Max pressure 250 bar (3625psi).

Total stacked units	Total Ports	Total length	Bolts (v) or Tie Rods (t)	Torque Nm / (ft-lb)
2	8	132 (5.2)	M8x125 (v)	16-18 / (11.8-13.2)
3	10	198 (7.8)	M8x190 (v)	16-18 / (11.8-13.2)
4	12	264 (10.4)	M8x270 (t)	16-18 / (11.8-13.2)
5	14	330 (13.0)	M8x330 (t)	16-18 / (11.8-13.2)

Electric connection

00

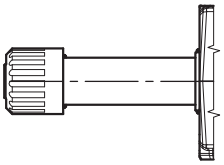

01

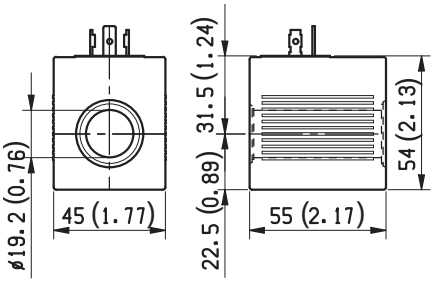

03 Protection class: IP 65 with female connector properly fitted (see drawing).

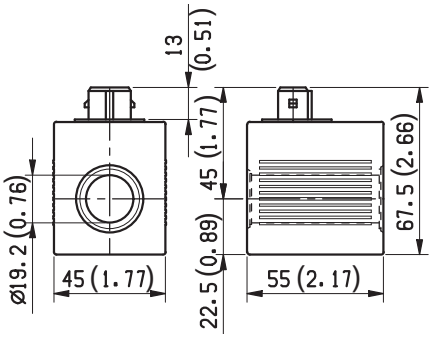

07 Protection class: IP 69 K with female connector properly fitted (see drawing).

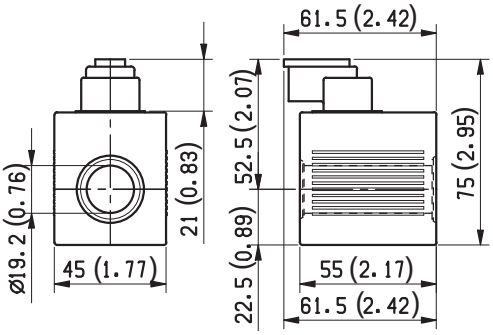

31

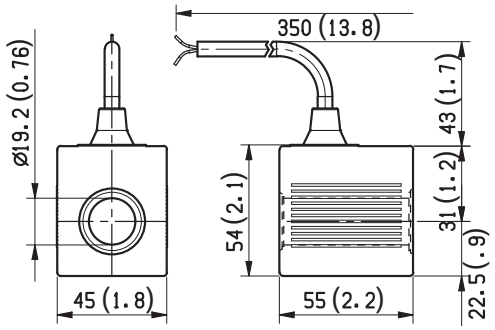

3

6 to 14/2 ways/positions bankable flow diverters flangeable L739.... (VS270F)

Size 8
Series 00
Maximum operating pressure 310 bar (4500 psi)
Maximum flow 80 l/min (21.1 gpm)
Ports G 3/8 - G 1/2 - SAE10

General specifications

6 way 2 position valve.
Directional spool valve with direct solenoid control.
Hydraulic / pneumatic pilot, or manual push and twist control available as option.
Usable as stand-alone, or as multiple stackable units.
Control spool operated by solenoid, with easily removable coil fastened by a ring nut.
Wet pin tube for DC coil, with push rod for mechanical override in case of voltage shortage.
Unrestricted 360° orientation of DC coil.
Control spool held in normal position by return spring.
Optional manual override (push-button or screw type).
Connectors available: DIN 43650 – ISO 4400, AMP Junior, DT04-2P (Deutsch), Free leads.

Contents

Ordering details	2
Symbols	2
Functional description	3
Technical data	3
Characteristic curves	5
External dimensions and fittings	6
Electric connection	9

RE 18301-12/02.2012 Bosch Rexroth AG

Ordering details

01	02		03	04	05	06	07	08	09
L	**7**	**39**							

Family

01	Compact directional valve	**L**

Type

02	Flow diverters	**7**

Ports

03	G 3/8 DIN 3852	**3**
	G 1/2 DIN 3852	**2**
	7/8-14 UNF (SAE10)	**D**

Control type

04	Solenoid (coil C48) without manual override	**12**
	Solenoid (coil C48) with push-button type manual override	**2P**
	Solenoid (coil C48) with screw type manual override	**1F**
	Hydraulic / pneumatic control [1]	**P1**
	Manual push and twist control	**H1**

Spool variants

05	6 way / 2 position P1 side	**6_**

Drain type		**6B**	**6H**	
06	Internal drain	●	●	**I**
	External drain	●	–	**E**

Voltage supply		**31**	**07**	**03**	**01**	**00**	
07	Manual push and twist control	–	–	–	–	–	**SG**
	Without coil	–	–	–	–	●	**00**
	12 V DC	●	●	●	●	–	**OB**
	13 V DC	–	●	–	●	–	**AD**
	24 V DC	●	●	●	●	–	**OC**
	27 V DC	–	●	–	●	–	**AC**
	48 V DC	–	–	–	●	–	**OD**

Electric connections

08	Without coils	**00**
	With coils, without mating connector DIN EN 175301-803 [2]	**01**
	With coils, with bi-directional diode, without mating connector vertical Amp-Junior	**03**
	With coils, with bi-directional diode, without mating connector DT04-2P	**07**
	With coils and bipolar sheathed lead 350mm (13,8 in) long	**31**

Assembly

09	Single diverter	**0**
	2 Pre-assembled diverters	**2**
	3 Pre-assembled diverters	**3**
	4 Pre-assembled diverters	**4**
	5 Pre-assembled diverters	**5**

● = Available – = Not available

Symbols

Drain type I

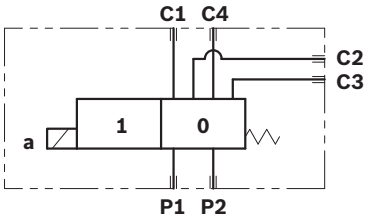

Drain type E

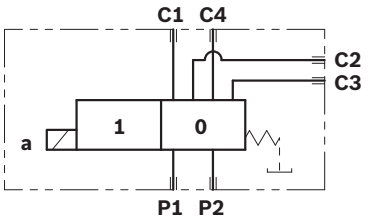

Spool variants

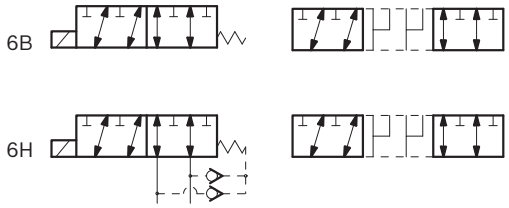

1) Minimum pressure 4 bar (58psi) with external drain (E), maximum pressure 200 bar (2901psi). With internal drain (I), at the minimum pressure (4 bar - 58psi), add the working pressure with ratio of 6,5:1. Example: With working pressure 100 bar (1450psi), minimum pilot pressure is 19.38 bar (281psi) ((100:6,5) + 4 bar (58psi)).

2) For connectors ordering code see data sheet RE 18325-90.

Functional description

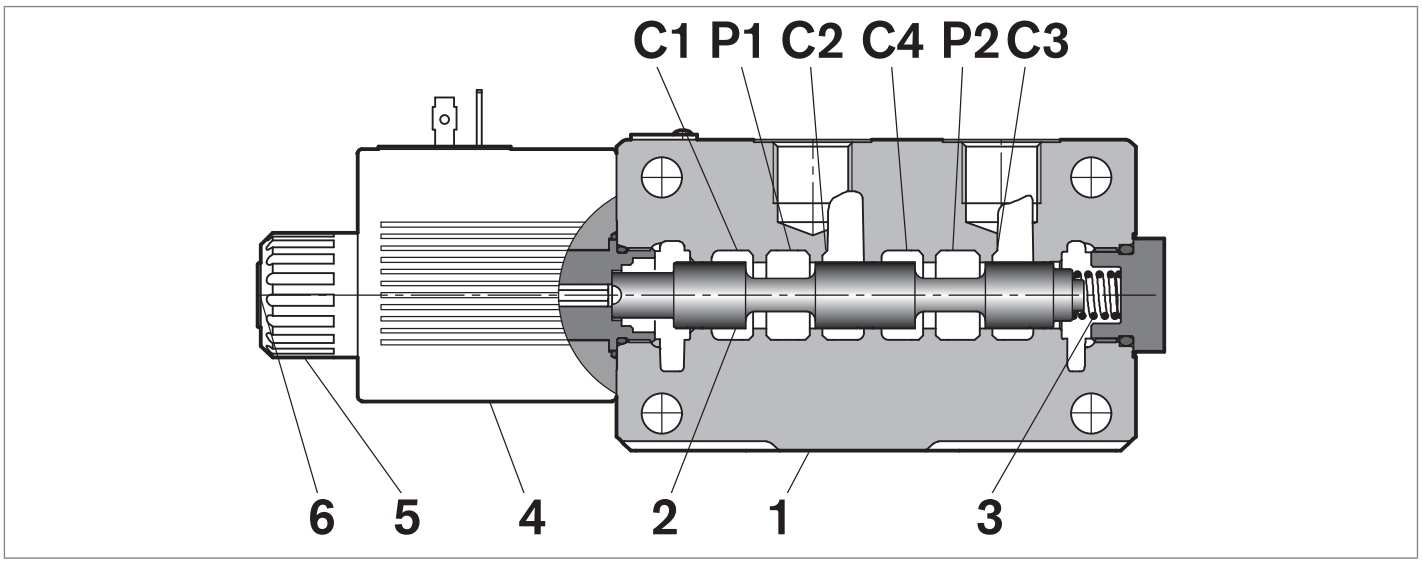

A valve basically consists of a housing (**1**), a control spool (**2**), a return spring (**3**) and a solenoid (**5**). It is designed to connect two inlet lines **P1** – **P2** (normally a set of hoses) and divert them to either the outlet ports (**C1** – **C4**) with spool in position "**0**", when the solenoid is de-energized, or to the outlet ports (**C2** – **C3**) with spool in position "**1**", when the solenoid is energized.
With the coil de-energized, the return spring (**3**) pushes back the spool (**2**) and holds it in position "**0**".
The coil (**5**) is fastened to the tube by the ring nut (**6**).
The manual override (**6**) allows to shift the spool (**2**) also in case of voltage shortage.
An external drain, to be connected to tank, ensures shifting operations also at higher working pressure.
Hydraulic / pneumatic pilot control, or manual push and twist control for spool shifting are available upon request.

Technical data

General		
Valve weight	kg (lbs)	3.2 (7.06)
Mounting position		unrestricted
Ambient Temperature	°C (°F)	–20....+50 (-4....+122) (NBR seals)
Hydraulic		
Maximum pressure with external drain ("E" type)	bar (psi)	310 (4500)
Maximum pressure with internal drain ("I" type)	bar (psi)	250 (3625)
Maximum pressure with internal drain and 6H scheme		310 (4500)
Maximum inlet flow	l/min (gpm)	80 (21.1)
Hydraulic fluid General properties: it must have physical lubricating and chemical properties suitable for use in hydraulic systems such as, for example:		Mineral oil based hydraulic fluids HL (DIN 51524 part 1). Mineral oil based hydraulic fluids HLP (DIN 51524 part 2). For use of environmentally acceptable fluids (vegetable or polyglycol base) please consult us.
Fluid Temperature	°C (°F)	–20....+80 (-4....+176) (NBR seals)
Permissible degree of fluid contamination		ISO 4572: $\beta_x \geq 75$ X = 12...15 ISO 4406: class 20/18/15 NAS 1638: class 9
Viscosity range	mm^2/s	5....420
Internal leakage with 100 bar (1450 psi) secondary pressure at C	cc/min (in^3/min)	min.10 (0.61) max. 20 (1.22)

Electrical						
Voltage type		DC				
Voltage tolerance (nominal voltage)	%	-10 .... +10				
Duty		Continuous, with ambient temperature ≤ 50°C (122°F)				
Coil wire temperature not to be exceeded	°C (°F)	150 (302)				
Insulation class		H				
Compliance with		Low Voltage Directive LVD 73/23/EC (2006/95/EC), 2004/108/EC				
Coil weight with DIN 43650 – ISO 4400 connector	kg (lbs)	0.5 (1.1)				
Voltage	V	12	13	24	27	48
Voltage type		DC	DC	DC	DC	DC
Power consumption	W	36	36	36	36	36
Current (nominal at 20 °C (68 °F))	A	3.0	2.77	1.53	1.32	0.75
Resistance (nominal at 20 °C (68 °F))	Ω	3.97	4.68	15.67	20.42	63.60

Note
For applications with different specifications consult us

Code	Voltage [V]	Connector type	Coil description	Marking	Coil Mat no.
OB 01	12 DC	EN 175301-803 (Ex. DIN 43650)	C4801 12DC	12 DC	R933000063
OB 03	12 DC	AMP JUNIOR	C4803 12DC	12 DC	R933000065
OB 07	12 DC	DEUTSCH DT 04-2P	C4807 12DC	12 DC	R933000068
OB 31	12 DC	Cable 350 mm long	C4831 12DC	12 DC	R933000064
AD 01	13 DC	EN 175301-803 (Ex. DIN 43650)	C4801 13DC	13 DC	R933000069
AD 07	13 DC	DEUTSCH DT 04-2P	C4807 13DC	13 DC	R933000073
OC 01	24 DC	EN 175301-803 (Ex. DIN 43650)	C4801 24DC	24 DC	R933000076
OC 03	24 DC	AMP JUNIOR	C4803 24DC	24 DC	R933000071
OC 07	24 DC	DEUTSCH DT 04-2P	C4807 24DC	24 DC	R933000075
OC 31	24 DC	Cable 350 mm long	C4831 24DC	24 DC	R933000070
AC 01	27 DC	EN 175301-803 (Ex. DIN 43650)	C4801 27DC	27 DC	R933000077
AC 07	27 DC	DEUTSCH DT 04-2P	C4807 27DC	27 DC	R933000074
OD 01	48 DC	DIN EN 175301-803 ISO 4400	C4801 48DC	48 DC	R933000078

Characteristic curves

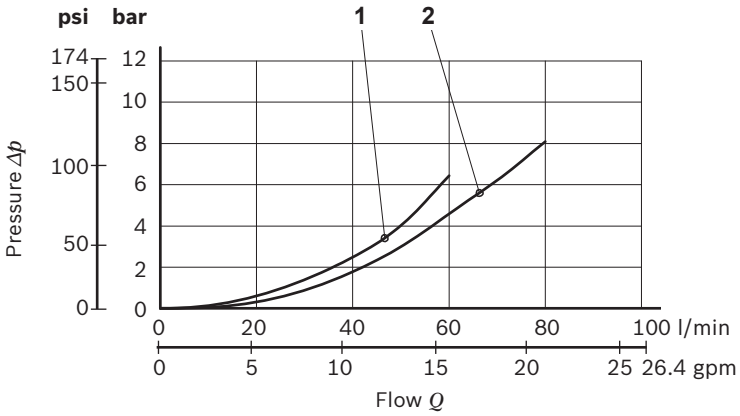

Model	Curve no.			
	P1>C1	P1>C2	P2>C4	P2>C3
VS270-G3/8	1	1	1	1
VS270-G1/2	2	2	2	2
VS270-SAE10	2	2	2	2

Measured with hydraulic fluid ISO-VG32 at 45° ±5 °C (113° ±9 °F); ambient temperature 20 °C (68 °F).

DI-DE performance limits

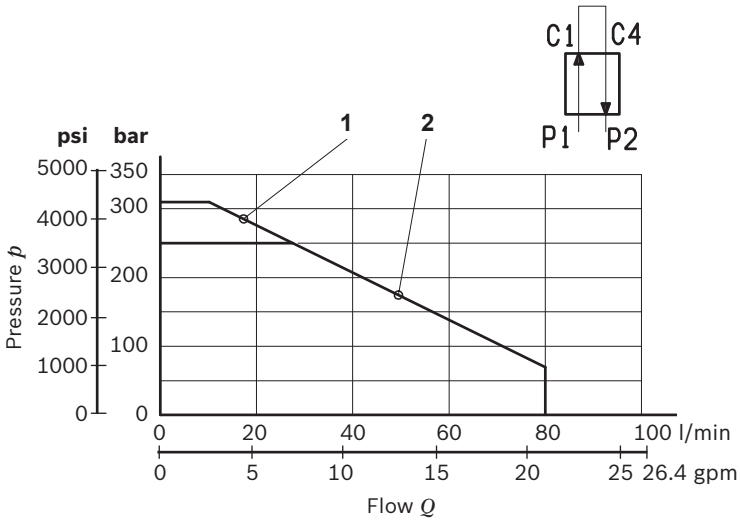

Scheme	Internal Drain	External Drain
v6B	2	1
6H	1	-

The performance curves are measured with flow going across and caming back, like P1>C1 and C4>P2.

RF 18301 12/02 2016 Bosch Rexroth AG
863

External dimensions and fittings

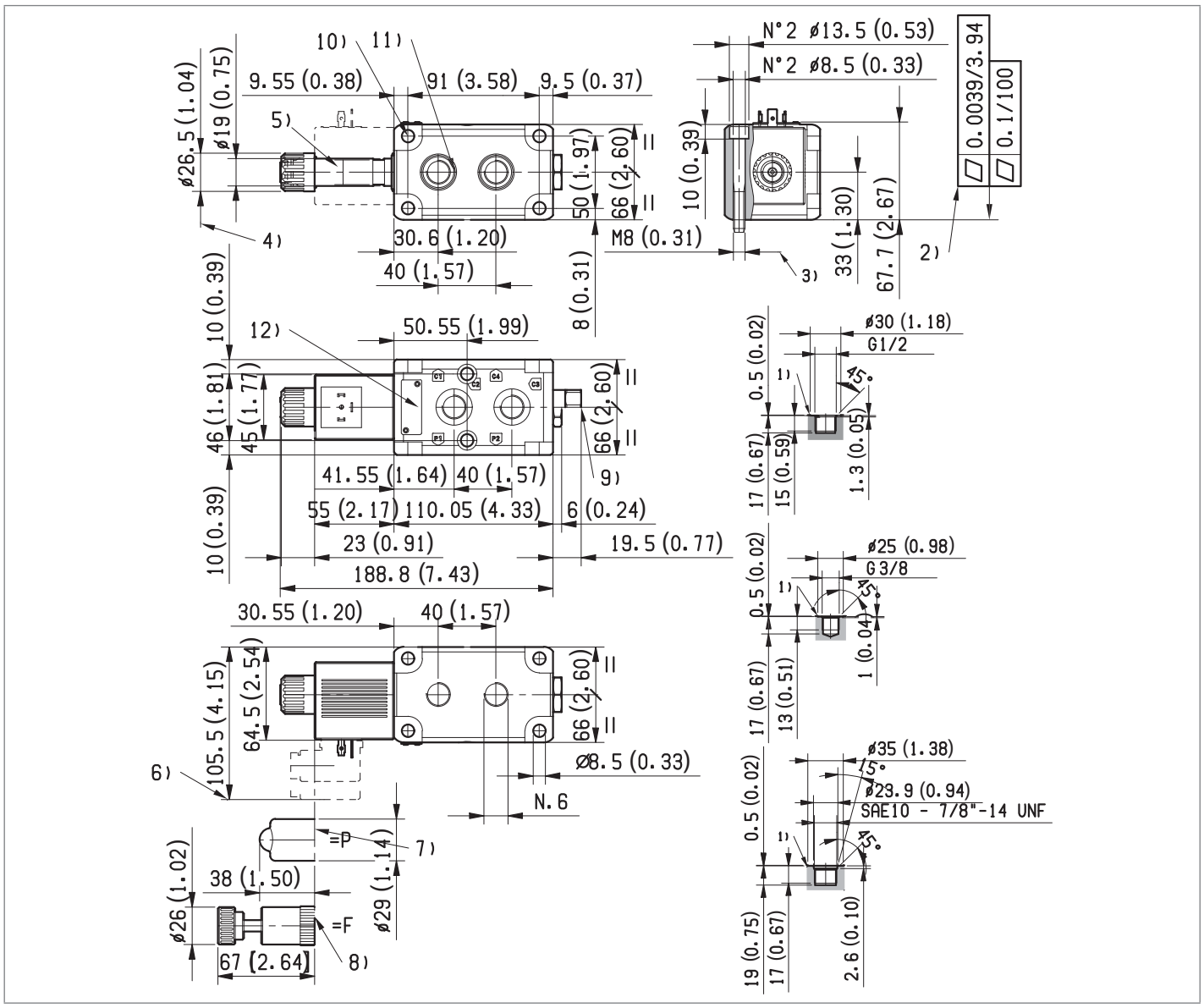

1 Ports P1, P2, C1, C2, C3, C4.
2 The mounting surface flatness must comply with specifications.
3 Two through installation holes reccomended screws M8x65 with strength class DIN 8.8.
Torque 15 – 16 Nm (11,1-11,8 ft-lb).
4 Ring nut for coil locking Ø 26.5 mm (1.04 inch).
Torque 5-6 Nm (3.6-4.4 ft-lb).
5 Solenoid tube Ø 19 mm (0.75 inch).
6 Minimum clearance needed for connector removal.
7 Optional push-button, 2P type, manual override for spool opening: it is pressure stuck to the ring nut for coil locking.
Mat no. R933000043.
8 Optional screw type manual override, 1F type, for spool opening: it is screwed (torque 6-7Nm (4.4-5.2 ft-lb)) to the tube as replacement of the coil ring nut. Mat no. R933007215.
9 External drain plug available with G 1/4 and SAE 4 port.
10 Four through holes, 8.5 mm dia., for coupling of other similar diverter valve.
11 O-Ring (NBR) for P1 and P2 ports.
12 Identification label.

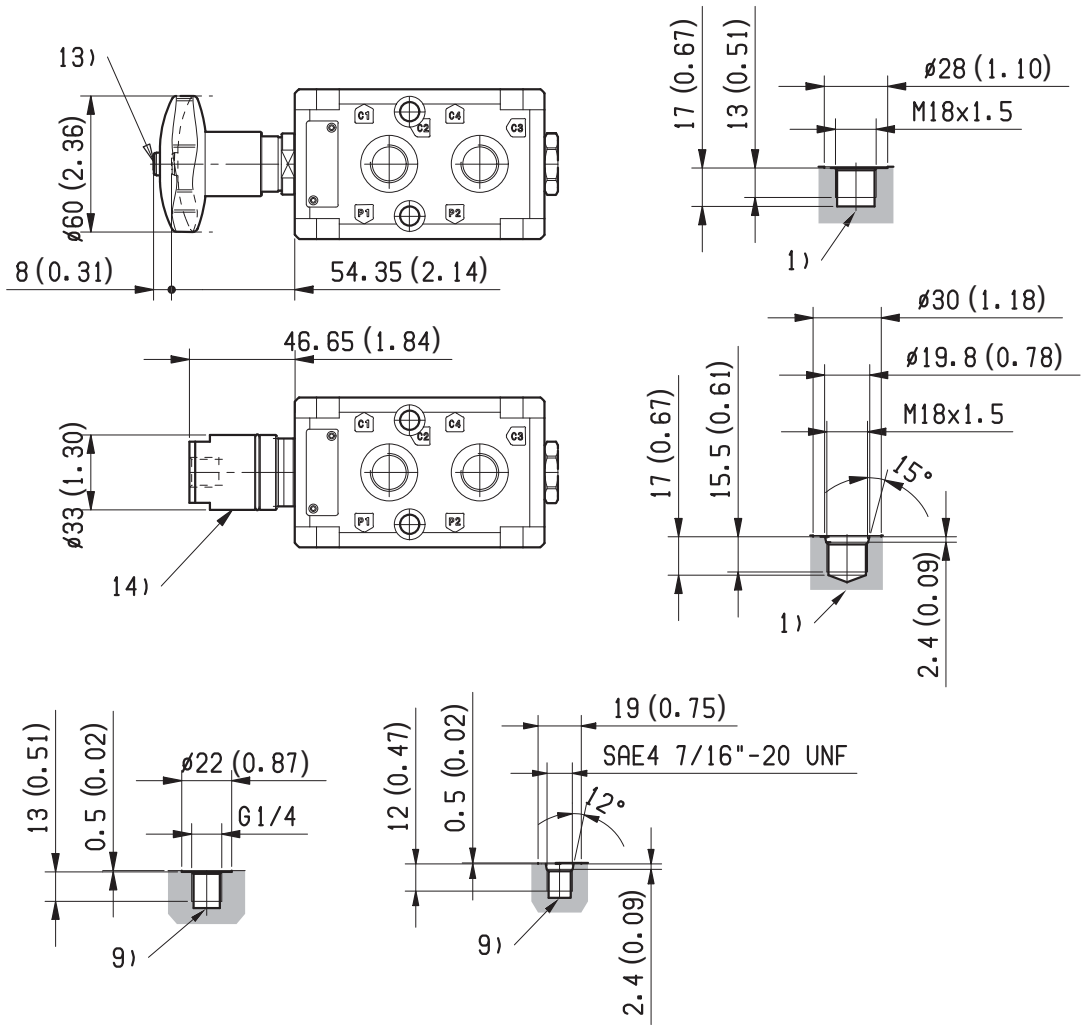

1 Ports P1, P2, C1, C2, C3, C4.
13 Dimensions of manual version, push and twist type.
14 Dimensions of hydraulic / pneumatic piloted version.
Pilot port plug available with G 1/4.

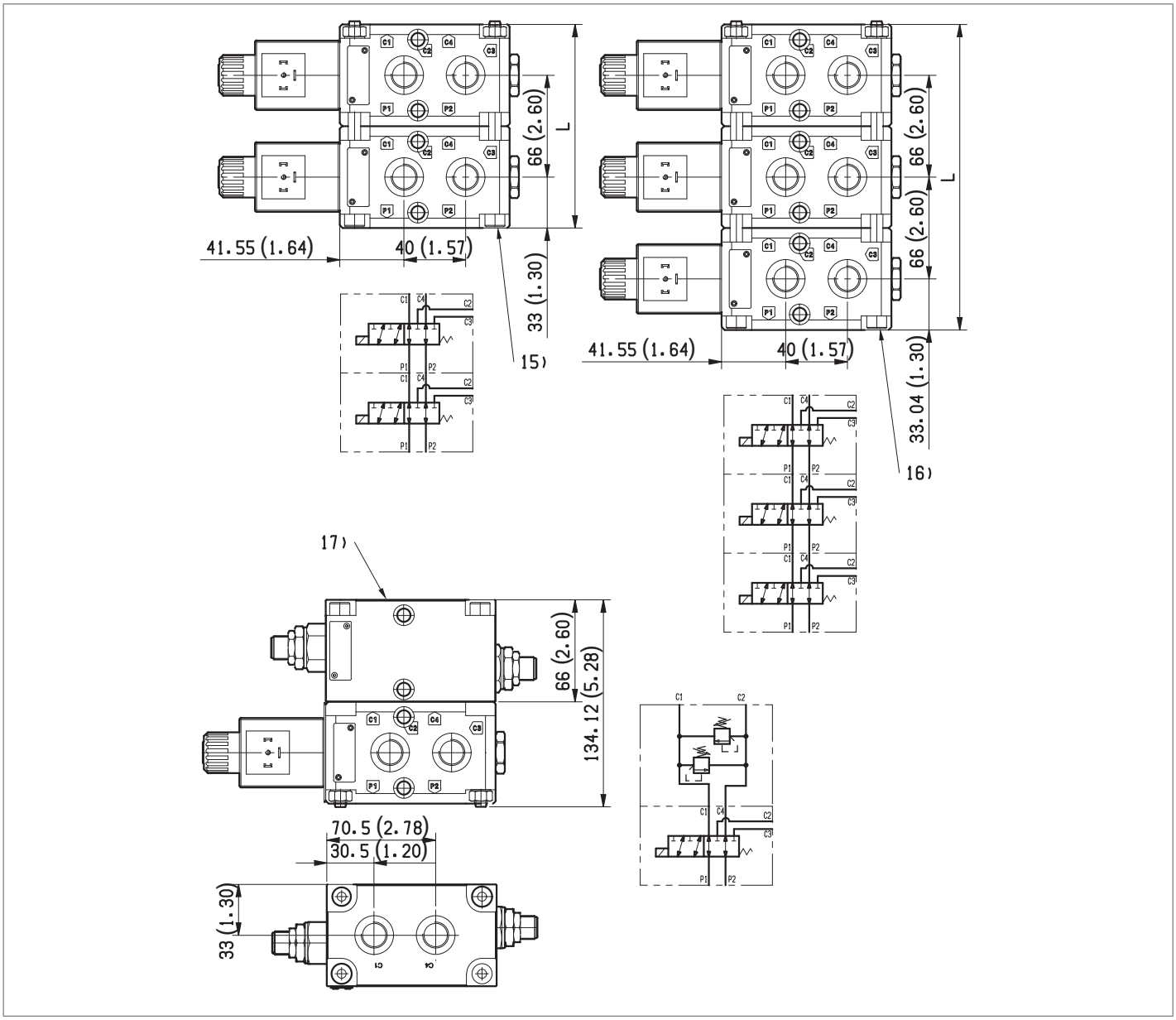

15 Four screws M8x125 DIN 912 for coupling together 2 diverter valves. Suggested bolt strength class DIN 8.8. Torque 16 – 18 Nm (11.8-13.3 ft-lb).

16 Four screws M8x190 DIN 912 for coupling together 3 diverter valves. Suggested bolt strength class DIN 8.8. Torque 16-18 Nm (11.-13.3 ft lb).

17 Modular relief valves (cartridges VMD1040SV):
with G 3/8 ports, code L7313610214SV00
with SAE 8 ports, code L731C610214SV00.
Max pressure 250 bar (3625psi).

Total stacked units	Total Ports	Total length	Bolts (v) or Tie Rods (t)	Torque Nm / (ft-lb)
2	8	132 (5.2)	M8x125 (v)	16-18 / (11.8-13.2)
3	10	198 (7.8)	M8x190 (v)	16-18 / (11.8-13.2)
4	12	264 (10.4)	M8x270 (t)	16-18 / (11.8-13.2)
5	14	330 (13.0)	M8x330 (t)	16-18 / (11.8-13.2)

Electric connection

00

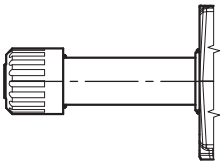

01

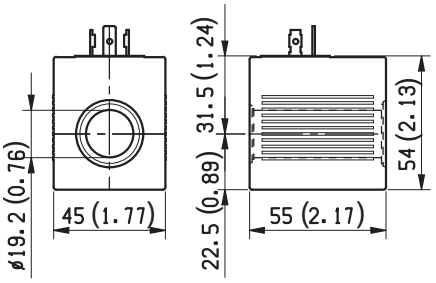

03 Protection class: IP 65 with female connector properly fitted (see drawing).

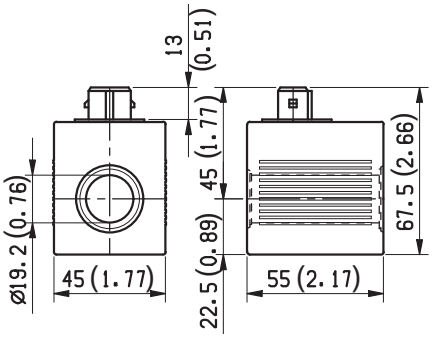

07 Protection class: IP 69 K with female connector properly fitted (see drawing).

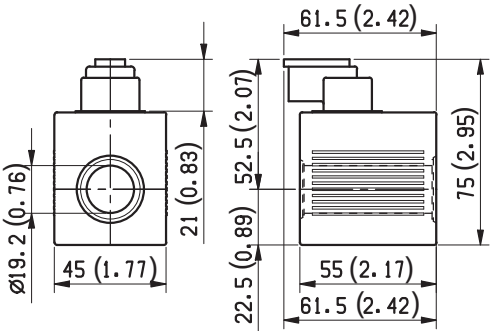

31

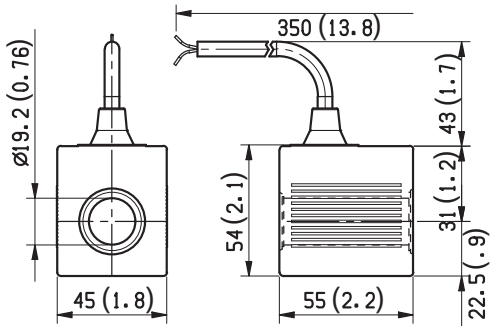

6 to 14/2 ways/positions bankable flow diverters flangeable L745... (VS281F-VS285F-VS286F-VS287F-VS289F)

Size 10
Series 00
Maximum operating pressure 310 bar (4500 psi)
Maximum flow 90 l/min (23.77 gpm)
Ports G 1/2 - SAE10 - M18x1.5 - JIS B 1/2 - M22x1.5

General specifications

6 way 2 position valve.
Directional spool valve with direct solenoid control.
Hydraulic / pneumatic pilot , or manual push and twist control available as option.
Usable as stand-alone, or as multiple stackable units.
Control spool operated by solenoid.
Wet pin tube for DC coil, with push rod for mechanical override in case of voltage shortage.
Unrestricted 360° orientation of DC coil.
Control spool held in normal position by return spring.
Optional manual override (push-button or screw type).
Connectors available: DIN 43650 – ISO 4400, AMP Junior, DT04-2P (Deutsch), Free leads.

Contents

Ordering details	2
Symbols	2
Functional description	3
Technical data	3
Characteristic curves	5
External dimensions and fittings	6
Electric connection	8

3

Ordering details

01	02		03	04	05	06	07	08	09
L	**7**	**45**							

Family

01	Compact directional valve	**L**

Type

02	Flow diverters	**7**

Ports

03	G1/2 DIN 3852	**4**
	7/8-14 UNF (SAE10)	**D**
	M18x1.5 ISO6149-1	**Y**
	JIS B 1/2	**L**
	M22x1,5 DIN 3852	**X**

Control type

04	Solenoid (coil C65) without manual override	**13**
	Solenoid (coil C65) with push-button type manual override	**1P**
	Solenoid (coil C65) with screw type manual override	**1F**
	Hydraulic / pneumatic control [1]	**P1**
	Manual push and twist control	**H1**

Spool variants

05	6 way / 2 position P1 side	**6_**

Drain type		**6A**	**6B**	**6D**	**6E**	**6G**	**6H**	
06	Internal drain	●	●	●	–	●	●	**I**
	External drain	●	●	●	●	–	–	**E**

Voltage supply		**31**	**07**	**03**	**01**	**00**	
07	Manual push and twist control	–	–	–	–	–	**SG**
	Without coil	–	–	–	–	●	**00**
	12 V DC	●	●	●	●	–	**OB**
	13 V DC	–	●	–	●	–	**AD**
	24 V DC	●	●	●	●	–	**OC**
	27 V DC	–	●	–	●	–	**AC**
	48 V DC	–	–	–	●	–	**OD**

Electric connections

08	Without coils	**00**
	With coils, without mating connector DIN EN 175301-803 [2]	**01**
	With coils, with bi-directional diode, without mating connector vertical Amp-Junior	**03**
	With coils, with bi-directional diode, without mating connector DT04-2P	**07**
	With coils and bipolar sheathed lead 350mm (13,8 in) long	**31**

Assembly

09	Single diverter	**0**
	2 Pre-assembled diverters	**2**
	3 Pre-assembled diverters	**3**
	4 Pre-assembled diverters	**4**
	5 Pre-assembled diverters	**5**

● = Available – = Not available

Symbols

Drain type I

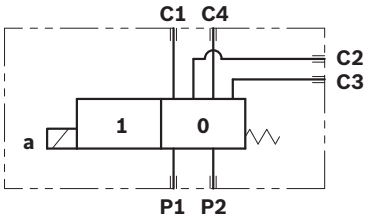

Drain type E

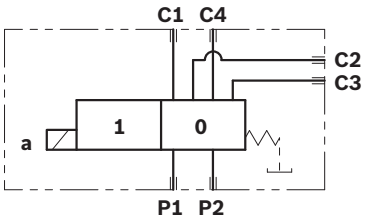

Spool variants

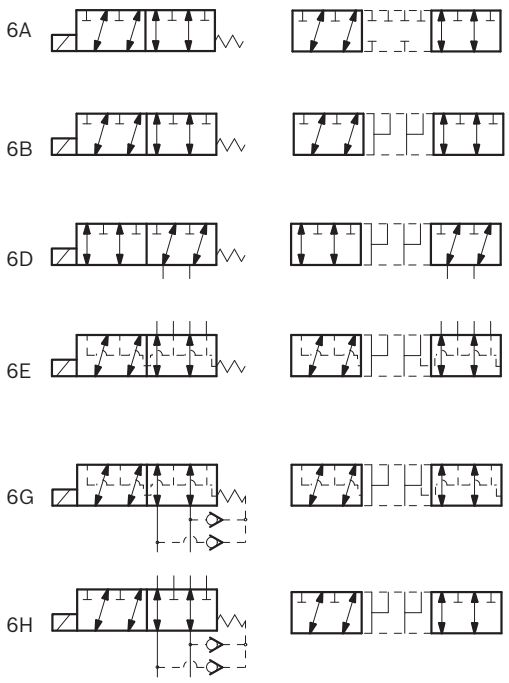

1) Minimum pressure 4 bar (58psi) with external drain (E), maximum pressure 200 bar (2901psi). With internal drain (I), at the minimum pressure (4 bar - 58psi), add the working pressure with ratio of 6,5:1. Example: With working pressure 100 bar (1450psi), minimum pilot pressure is 19.38 bar (281psi) ((100:6,5) + 4 bar (58psi)).

2) For connectors ordering code see data sheet RE 18325-90.

Functional description

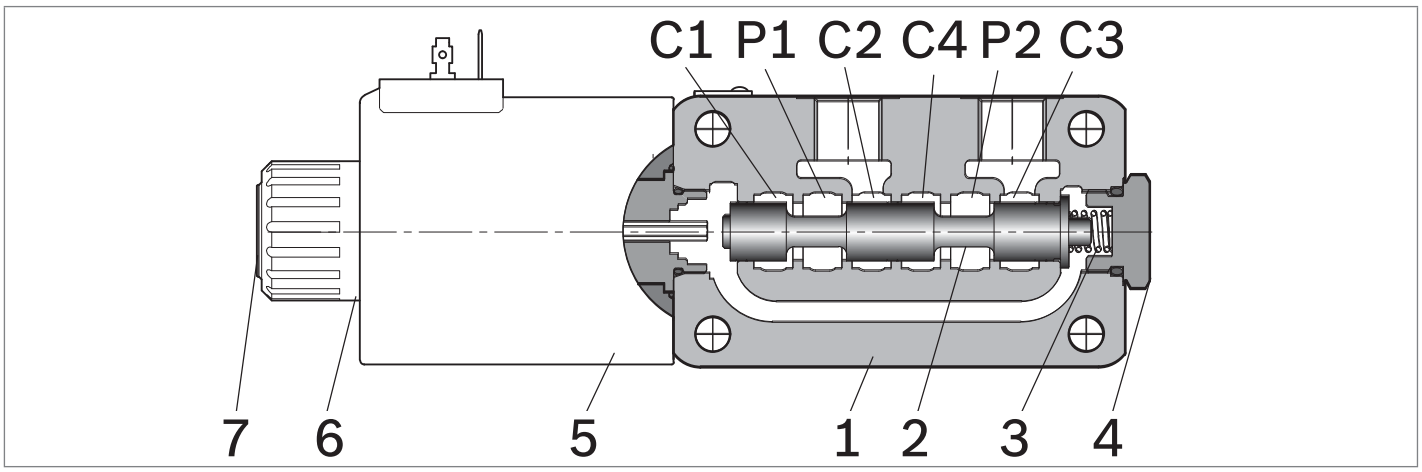

A valve basically consists of a housing (**1**), a control spool (**2**), a return spring (**3**) and a solenoid (**5**). It is designed to connect two inlet lines **P1** – **P2** (normally a set of hoses) and divert them to either the outlet ports (**C1** – **C4**) with spool in position "**0**", when the solenoid is de-energized, or to the outlet ports (**C2** – **C3**) with spool in position "**1**", when the solenoid is energized.
With the coil de-energized, the return spring (**3**) pushes back the spool (**2**) and holds it in position "**0**".
The coil (**5**) is fastened to the tube by the ring nut (**6**).
The manual override (**7**) allows to shift the spool (**2**) also in case of voltage shortage.
An external drain, to be connected to tank, ensures shifting operations also at higher working pressure.
Hydraulic / pneumatic pilot control, or manual push and twist control for spool shifting are available upon request.

Technical data

General		
Valve weight	kg (lbs)	4.15 (9.15)
Mounting position		unrestricted
Ambient Temperature	°C (°F)	–20....+50 (-4....+122) (NBR seals)
Hydraulic		
Maximum pressure with external drain ("E" type)	bar (psi)	310 (4500)
Maximum pressure with internal drain ("I" type)	bar (psi)	250 (3625)
Maximum flow	l/min (gpm)	90 (24)
Hydraulic fluid General properties: it must have physical lubricating and chemical properties suitable for use in hydraulic systems such as, for example:		Mineral oil based hydraulic fluids HL (DIN 51524 part 1). Mineral oil based hydraulic fluids HLP (DIN 51524 part 2). For use of environmentally acceptable fluids (vegetable or polyglycol base) please consult us.
Fluid Temperature	°C (°F)	–20....+80 (-4....+176) (NBR seals)
Permissible degree of fluid contamination		ISO 4572: $\beta_x \geq 75$ X = 12...15 ISO 4406: class 20/18/15 NAS 1638: class 9
Viscosity range	mm^2/s	5....420
Internal leakage with 100 bar (1450 psi) secondary pressure at C	cc/min (in^3/min)	min.10 (0.61) max. 25 (1.52)

Electrical						
Voltage type		DC				
Voltage tolerance (nominal voltage)	%	-10 .... +10				
Duty		Continuous, with ambient temperature ≤ 50°C (122°F)				
Coil wire temperature not to be exceeded	°C (°F)	150 (302)				
Insulation class		H				
Compliance with		Low Voltage Directive LVD 73/23/EC (2006/95/EC), 2004/108/EC				
Coil weight with DIN 43650 – ISO 4400 connector	kg (lbs)	1.05 (2.3)				
Voltage	V	12	13	24	27	48
Voltage type		DC	DC	DC	DC	DC
Power consumption	W	44	44	44	44	44
Current (nominal at 20 °C (68 °F))	A	3.6	3.4	1.8	1.6	0.9
Resistance (nominal at 20 °C (68 °F))	Ω	3.2	3.6	12.8	16.9	50.5V

Note
For applications with different specifications consult us.

Code	Voltage [V]	Connector type	Coil description	Marking	Coil Mat no.
OB 01	12 DC	EN 175301-803 (Ex. DIN 43650)	C6501 12DC	12 DC	R933000100
OB 03	12 DC	AMP JUNIOR	C6503 12DC	12 DC	R933000119
OB 07	12 DC	DEUTSCH DT 04-2P	C6507 12DC	12 DC	R933000107
OB 31	12 DC	Cable 350 mm long	C6531 12DC	12 DC	R933000104
AD 01	13 DC	EN 175301-803 (Ex. DIN 43650)	C6501 13DC	13 DC	R933000101
AD 07	13 DC	DEUTSCH DT 04-2P	C6507 13DC	13 DC	R933000112
OC 01	24 DC	EN 175301-803 (Ex. DIN 43650)	C6501 24DC	24 DC	R933000102
OC 03	24 DC	AMP JUNIOR	C6503 24DC	24 DC	R933000120
OC 07	24 DC	DEUTSCH DT 04-2P	C6507 24DC	24 DC	R933000111
OC 31	24 DC	Cable 350 mm long	C6531 24DC	24 DC	R933000110
AC 01	27 DC	EN 175301-803 (Ex. DIN 43650)	C6501 27DC	27 DC	R933000103
AC 03	27 DC	AMP JUNIOR	C6503 27DC	27 DC	R93307055
AC 07	27 DC	DEUTSCH DT 04-2P	C6507 27DC	27 DC	R933000113
OD 01	48 DC	EN 175301-803 (Ex. DIN 43650)	C6501 48DC	48 DC	R933000114

Characteristic curves

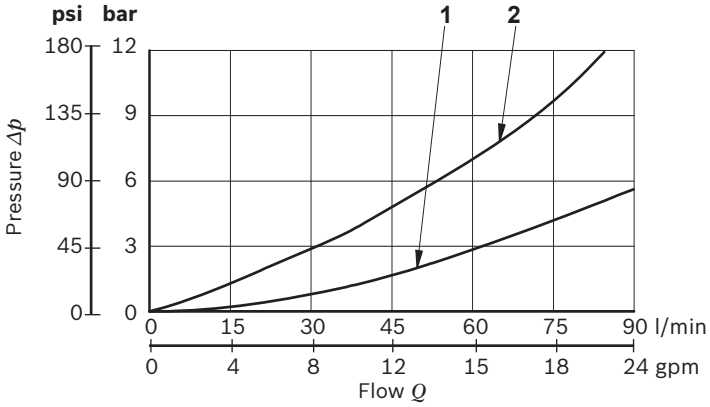

Flow path	Curve no.
P1 > C1	1
P1 > C2	2
P2 > C1	2
P2 > C4	1

Measured with hydraulic fluid ISO-VG32 at 45° ±5 °C (113° ±9 °F); ambient temperature 20 °C (68 °F).

DI-DE performance limits

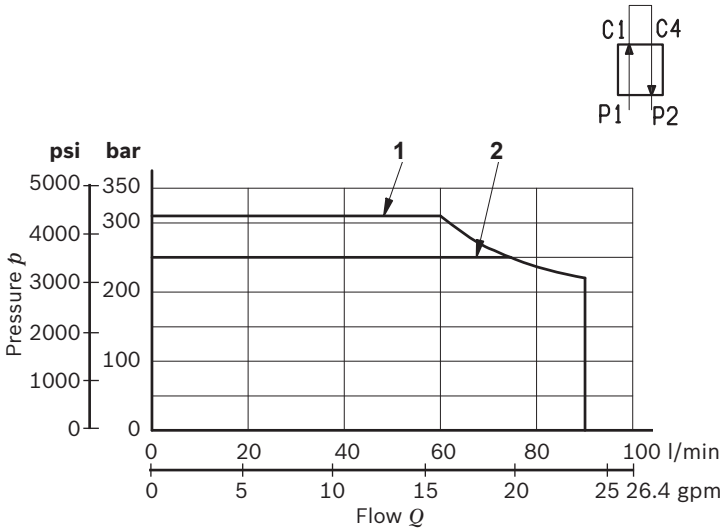

Drain type	Curve No.
External (-E-)	1
Internal (-I-)	2

Flow across both ways: forward across P1>C1 and reverse across C4>P2

External dimensions and fittings

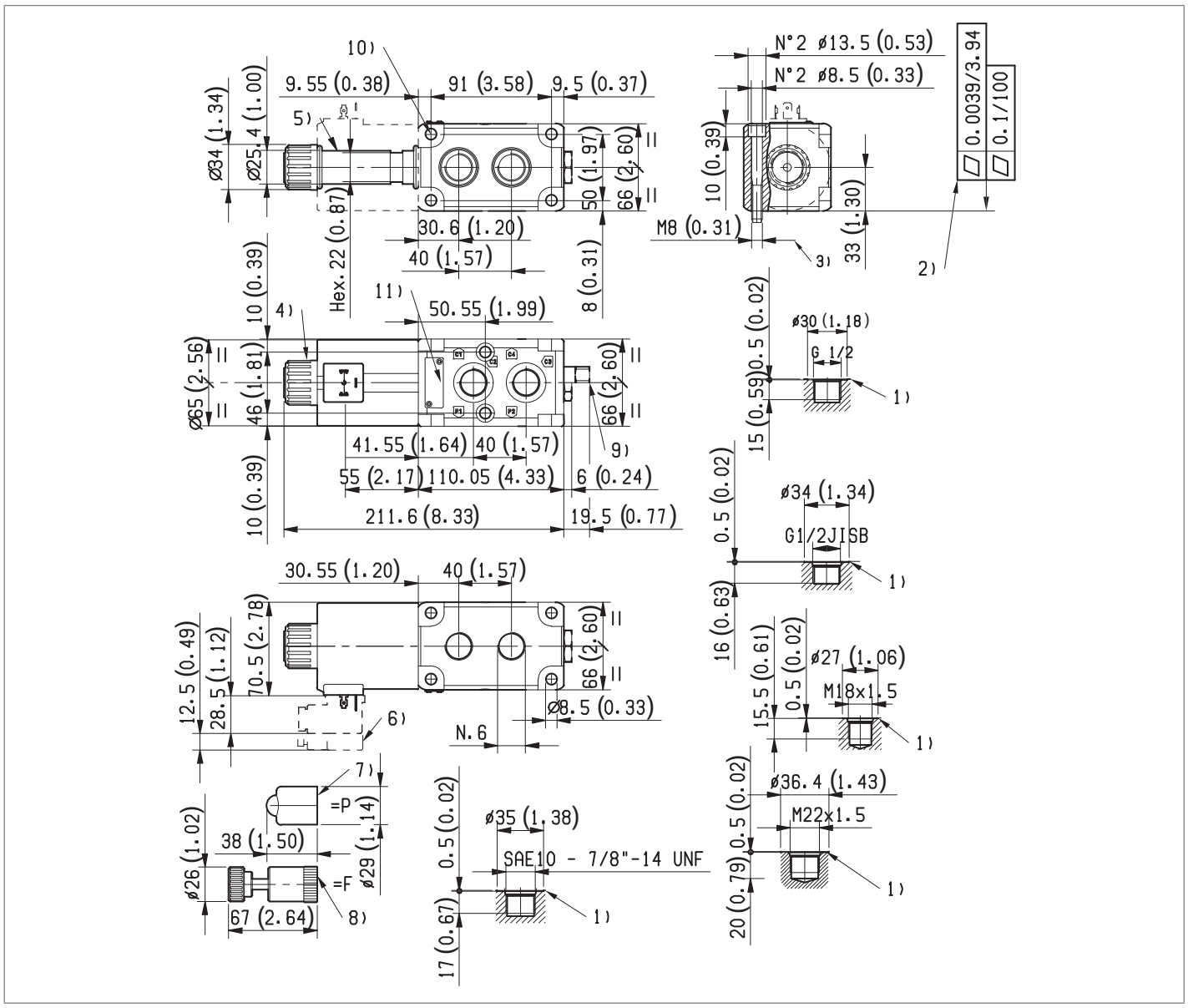

1 Ports P1, P2, C1, C2, C3, C4.
2 The mounting surface flatness must comply with specifications.
3 Two through installation holes reccomended screws M8x65 DIN 912 with strength class DIN 8.8.
Torque 15-16 Nm (11.1 – 11.8 ft-lb).
4 Ring nut for coil locking OD 34 mm (1.34 inch).
Torque 7-8 Nm (5,25,9 ft-lb).
5 Solenoid tube Ø 25,4 mm (1 inch).
6 Minimum clearance needed for connector removal.
7 Optional push-button, 1P type, manual override for spool opening: it is pressure stuck to the ring nut for coil locking.
Mat no. R933003424.
8 Optional screw, 1F type, manual override for spool opening: it is screwed (torque 8-9 Nm (5.9-6.6 ft-lb)) to the tube as replacement of the coil ring nut.
Mat no. R933003713.
9 External drain plug with G 1/4 and SAE 4 port.
10 Four through holes, 8.5 mm dia., for coupling of other similar diverter valve.
11 Identification label.

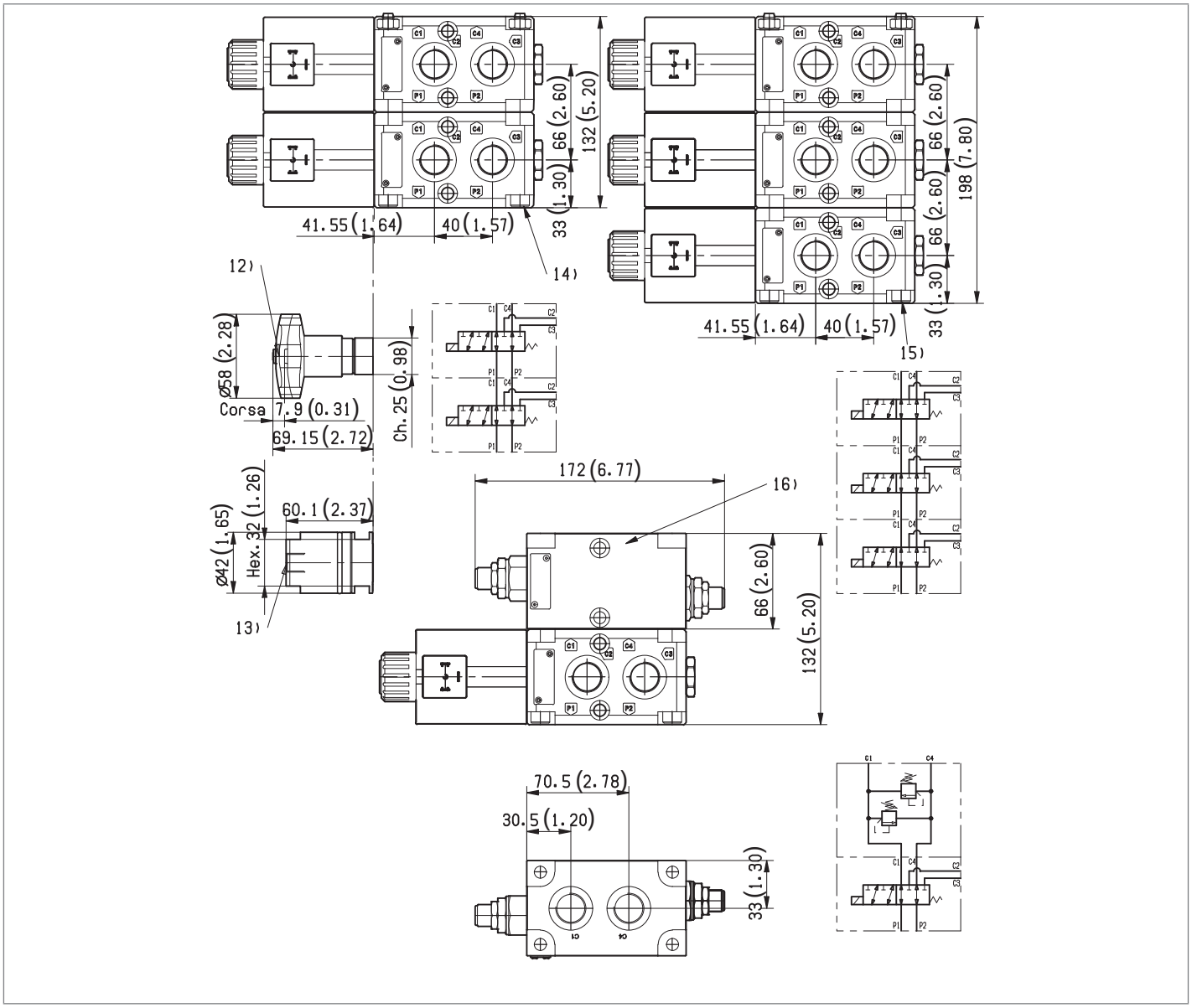

12 Manual version, push and twist type.
13 Hydraulic / pneumatic piloted version. Pilot port plug available with G 1/4 and SAE4.
14 Four screws M8x125 DIN 912 for assembly of 2 units; strength class DIN 8.8.
Torque 15-16 Nm (11.1 – 11.8 ft-lb).
15 Four screws M8x190 DIN 912 for assembly of 3 units; strength class DIN 8.8.
Torque 15-16 Nm (11.1 – 11.8 ft-lb).
16 Modular relief valves (cartridges VMD1070SV):
with G 1/2 ports, code L7404610214SV00
with SAE 10 ports, code L740D610214SV00.
Max pressure 250 bar (3625psi).

Total stacked units	Total Ports	Total length	Bolts (v) or Tie Rods (t)	Torque Nm / (ft-lb)
2	8	132 (5.2)	M8x125 (v)	16-18 / (11.8-13.2)
3	10	198 (7.8)	M8x190 (v)	16-18 / (11.8-13.2)
4	12	264 (10.4)	M8x270 (t)	16-18 / (11.8-13.2)
5	14	330 (13.0)	M8x330 (t)	16-18 / (11.8-13.2)

Electric connection

00

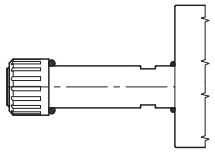

01

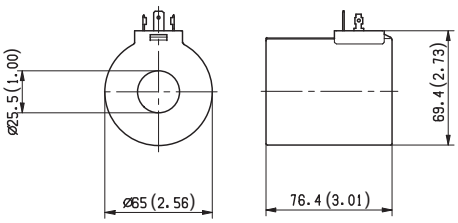

03 Protection class: IP 65 with female connector properly fitted (see drawing).

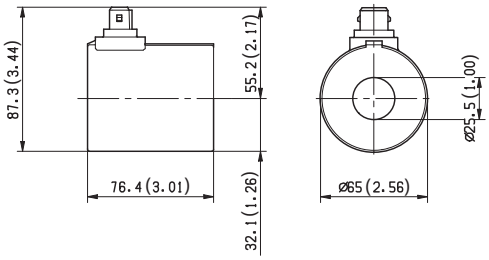

07 Protection class: IP 69 K with female connector properly fitted (see drawing).

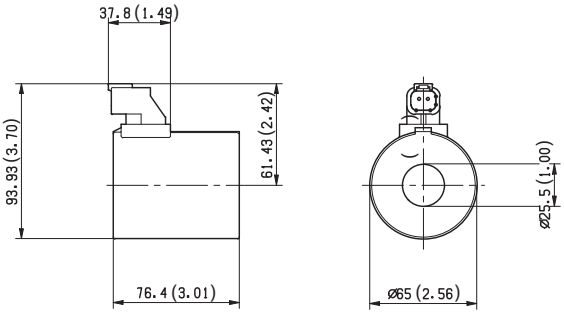

31

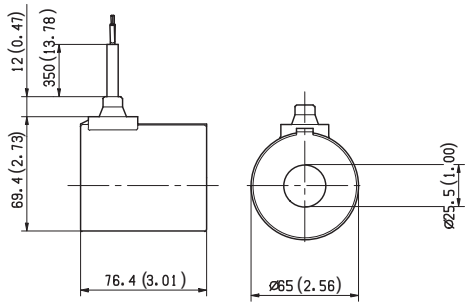

Flow diverters
8/2 ways/positions

Designation	Description	Ports/Size	Code	Data sheet	Page
8/2 ways/positions flow diverters	VS570, VS575	G 1/4, SAE 4 / Size 2	L765_	18302-13	879

8/2 ways/positions flow diverters L765... (VS570-VS575)

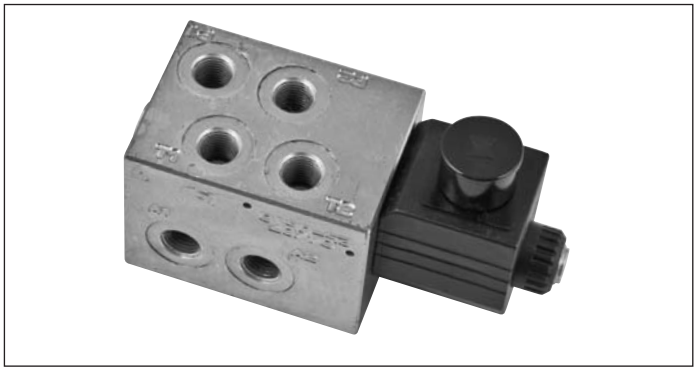

Size 2
Series 00
Maximum operating pressure 210 bar (3045 psi)
Maximum flow 10 l/min (2.6 gpm)
Ports G 1/4 - SAE 4

General specifications

8 way 2 position valve.
Directional spool valve with direct solenoid control.
Normally used to set up the remote control (ISO – SAE) in the earth moving machine.
Control spool operated by solenoid, with easily removable coil fastened by a ring nut.
Wet pin tube for DC coil, with push rod for mechanical override in case of voltage shortage- Unrestricted 360° orientation of DC coil.
Control spool held in normal position by return spring.
Connectors available: DIN 43650 – ISO 4400, AMP Junior, DT04-2P (Deutsch), Free leads.

Contents

Ordering details	2
Symbols	2
Functional description	3
Technical data	4
Characteristic curves	6
External dimensions and fittings	7
Electric connection	8

RE 18301-13/02.2012 Bosch Rexroth AG

Ordering details

01	02		03	04	05	06	07	08	
L	**7**	**65**		**10**		**I**			**0**

Family

01	Compact directional valve	**L**

Type

02	Flow diverters	**7**

Ports

03	G 1/4 DIN 3852	**2**
	7/16-20 UNF(SAE4)	**A**

Control type

04	Solenoid (coil C36)	**10**

Configuration

05	8 ways / 2 positions	**BY**
	8 ways / 2 positions with detent	**CY**

Drain type

06	Internal drain	**I**

Voltage supply		**31**	**07**	**04**	**03**	**01**	**00**	
07	Without coil	–	–	–	–	–	●	**00**
	12 V DC	●	●	●	●	●	–	**OB**
	13 V DC	–	●	–	–	●	–	**AD**
	24 V DC	●	●	●	●	●	–	**OC**
	27 V DC	–	●	–	–	●	–	**AC**
	48 V DC	–	–	●	–	●	–	**OD**
	110 V DC	–	–	–	–	●	–	**OE**

Electric connections

08	Without coils	**00**
	With coils, without mating connector DIN EN 175301-803 [1]	**01**
	With coils, with bi-directional diode, without mating connector vertical Amp-Junior	**03**
	With coils, with bi-directional diode, without mating connector horizontal Amp-Junior	**04**
	With coils, with bi-directional diode, without mating connector DT04-2P	**07**
	With coils and bipolar sheathed lead 350mm (13,8 in) long	**31**

● = Available – = Not available

Symbols

Configuration BY

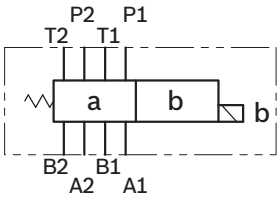

Configuration CY

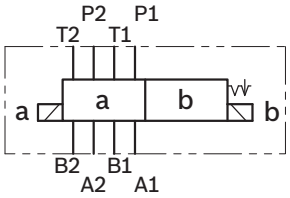

Spool variants

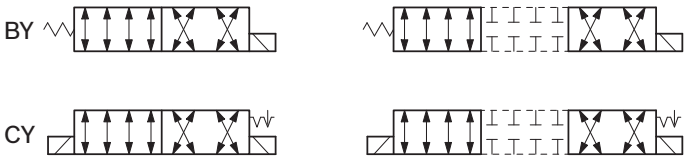

1) For connectors ordering code see data sheet RE 18325-90.

Functional description

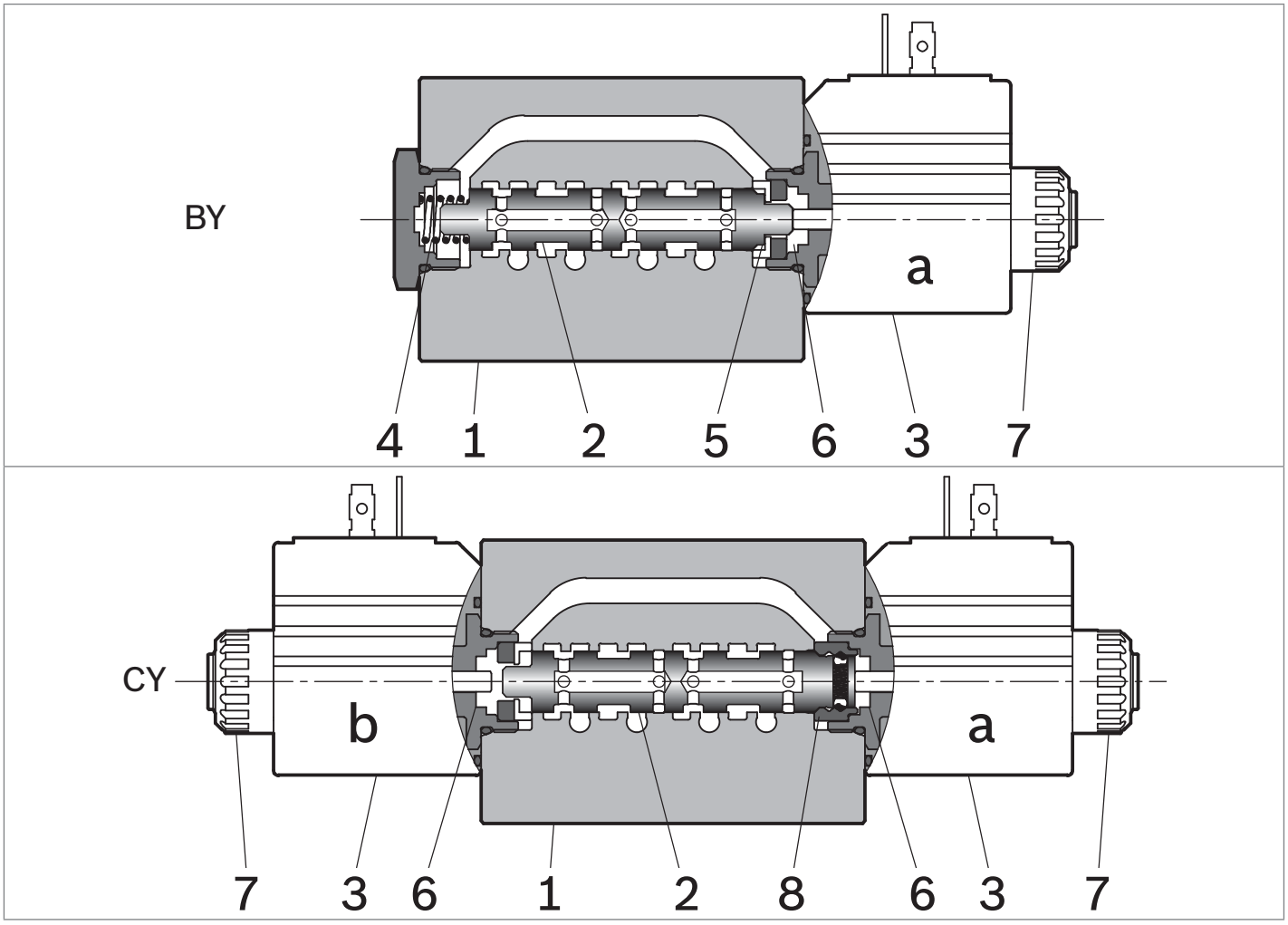

A valve basically consists of a housing (**1**), a control spool (**2**), one or two solenoid (**3**), and a return spring (**4**).

L76510BY..
If the solenoid is energized, the spool goes from position "**0**" to position "**b**".
With the coil de-energized, the return spring (**3**) pushes back the spool (**2**) and holds it in position "**0**".
The coil (**6**) is fastened to the tube by the ring nut (**7**).

L76510CY..
If the solenoid "**a**" is energized, the spool goes from position "**a**" to position "**b**". The position "**b**" is held by the detent (**8**).
The return to position "**a**" is obtained energising the solenoid "**b**".
The coil (**6**) is fastened to the tube by the ring nut (**7**).

Technical data

General							
Valve weight CY	kg (lbs)	1.88 (4.15)					
Valve weight BY	kg (lbs)	2.18 (4.8)					
Mounting position		unrestricted					
Ambient Temperature	°C (°F)	–20....+50 (-4....+122) (NBR seals)					
Hydraulic							
Maximum pressure	bar (psi)	210 (3045)					
Maximum flow	l/min (gpm)	10 (2.64)					
Hydraulic fluid General properties: it must have physical lubricating and chemical properties suitable for use in hydraulic systems such as, for example:		Mineral oil based hydraulic fluids HL (DIN 51524 part 1). Mineral oil based hydraulic fluids HLP (DIN 51524 part 2). For use of environmentally acceptable fluids (vegetable or polyglycol base) please consult us.					
Fluid Temperature	°C (°F)	–20....+80 (-4....+176) (NBR seals)					
Permissible degree of fluid contamination		ISO 4572: $\beta_x \geq 75$ X = 12...15 ISO 4406: class 20/18/15 NAS 1638: class 9					
Viscosity range	mm^2/s	5....420					
Internal leakage with 100 bar (1450 psi)	cc/min (in^3/min)	min.10 (0.61) max. 20 (1.2)					
Electrical							
Voltage type		DC					
Voltage tolerance (nominal voltage)	%	-10 .... +10					
Duty		Continuous (100%), with ambient temperature ≤ 50°C (122°F)					
Coil wire temperature not to be exceeded	°C (°F)	150 (302)					
Insulation class		H					
Compliance with		Low Voltage Directive LVD 73/23/EC (2006/95/EC), 2004/108/EC					
Coil weight with connection EN 175301-803	kg (lbs)	0.215 (0.44)					
Voltage	V	12	13	24	27	48	110
Voltage type		DC	DC	DC	DC	DC	DC
Power consumption	W	26	26	26	26	26	26
Current (nominal at 20 °C (68 °F))	A	2.15	2.00	1.10	1.00	0.54	0.27
Resistance (nominal at 20 °C (68 °F))	Ω	5.5	6.5	22	28	89	413

Note
For applications with different specifications consult us

Code	Voltage [V]	Connector type	Coil description	Marking	Coil Mat no.
OB 01	12 DC	EN 175301- 803 (Ex. DIN 43650)	C3601 12DC	12 DC	R933000044
OB 03	12 DC	AMP JUNIOR	C3603 12DC	12 DC	R933000047
OB 04	12 DC	AMP JUNIOR Horizontal	C3604 12DC	12 DC	R933002913
OB 07	12 DC	DEUTSCH DT 04-2P	C3607 12DC	12 DC	R933000048
OB 31	12 DC	Cable 350 mm long	C3631 12DC	12 DC	R933000045
AD 01	13 DC	EN 175301-803 (Ex. DIN 43650)	C3601 13DC	13 DC	R933000051
AD 07	13 DC	DEUTSCH DT 04-2P	C3607 13DC	13 DC	R933000049
OC 01	24 DC	EN 175301-803 (Ex. DIN 43650)	C3601 24DC	24 DC	R933000053
OC 03	24 DC	AMP JUNIOR	C3603 24DC	24 DC	R933000057
OC 04	24 DC	AMP JUNIOR Horizontal	C3604 24DC	24 DC	R933002914
OC 07	24 DC	DEUTSCH DT 04-2P	C3607 24DC	24 DC	R933000058
OC 31	24 DC	Cable 350 mm long	C3637 24DC	24 DC	R933000055
AC 01	27 DC	EN 175301-803 (Ex. DIN 43650)	C3601 27DC	27 DC	R933000056
AC 07	27 DC	DEUTSCH DT 04-2P	C3607 27DC	27 DC	R933000050
OD 01	48 DC	EN 175301-803 (Ex. DIN 43650)	C3601 48DC	48 DC	R933000059
OD 04	48 DC	AMP JUNIOR Horizontal	C3604 48DC	48 DC	R933002915
OE 01	110 DC	EN 175301-803 (Ex. DIN 43650)	C3601 110DC	110 DC	R933000061

Characteristic curves

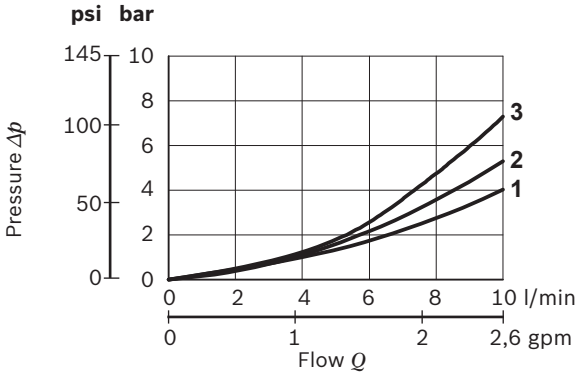

Scheme	Curve n.							
	A1>P1	B1>T1	A2>P2	B2>T2	A1>T1	B1>P1	A2>T2	B2>P2
BY - CY	2	1	2	1	2	3	2	3

Measured with hydraulic fluid ISO-VG32 at 45° ±5 °C (113° ±9 °F); ambient temperature 20 °C (68 °F).

Performance limits

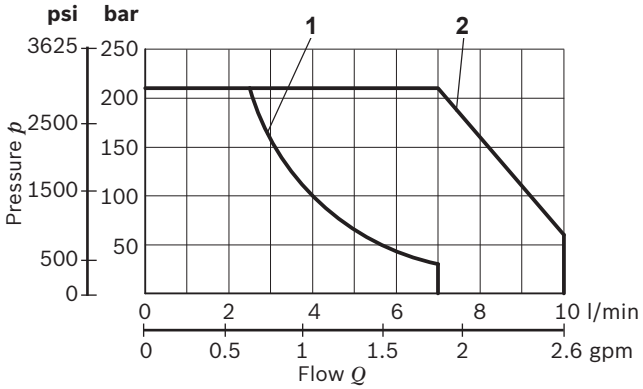

Scheme	Curve No.
BY	1
CY	2

The performance curves are measured with flow going across and caming back.

External dimensions and fittings

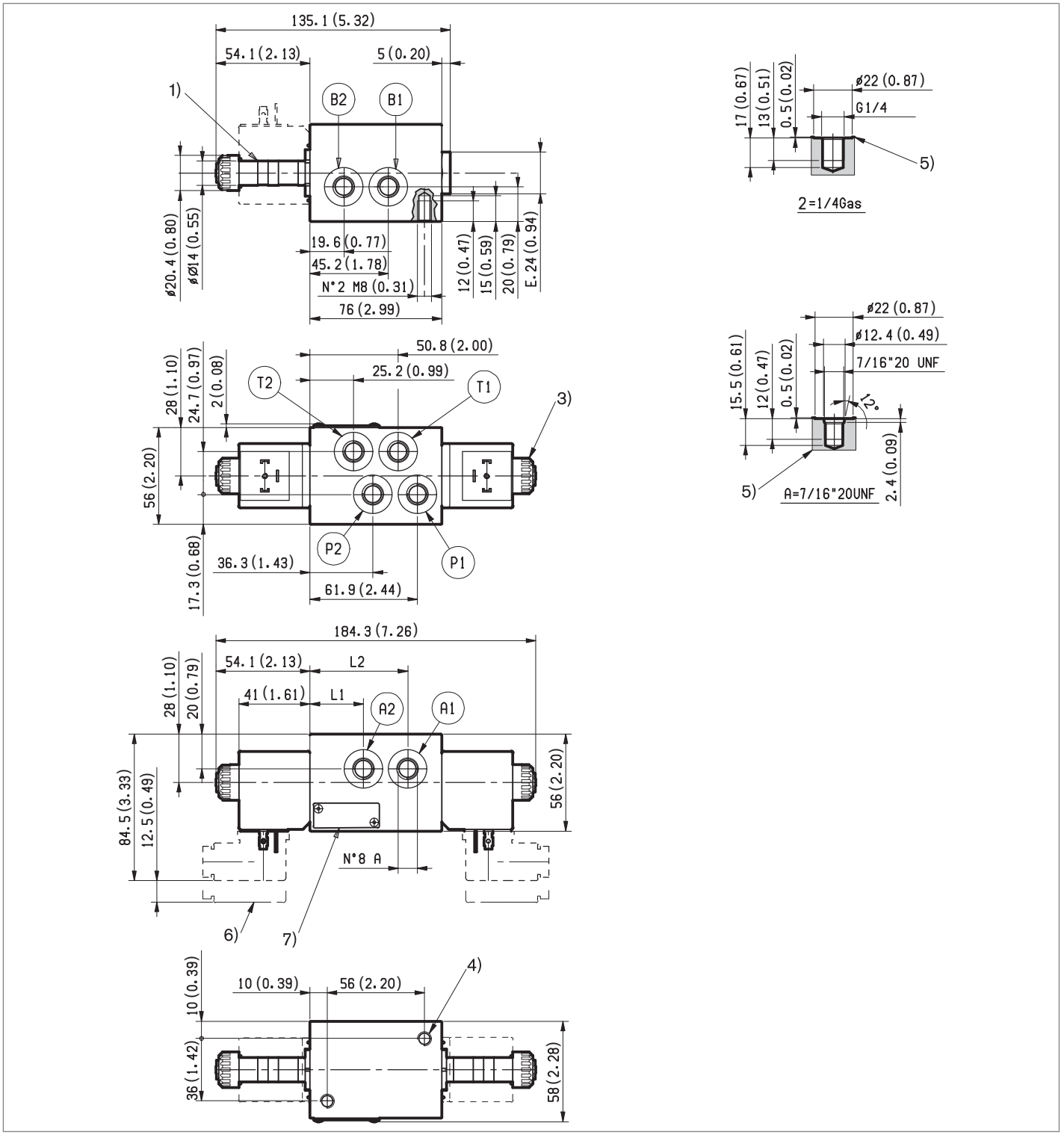

1 Solenoid tube Ø 14 mm (0,55 inch).
3 Ring nut for coil locking Ø 20,4 mm (0.8 inch).
Torque 3 – 4 Nm (2.2 – 3.0 ft-lb).
4 Two through holes for installation. Recommended screws M8 with strength class DIN 8.8.
5 Hydraulic Ports (G1/4- SAE4).
6 Minimum clearance needed for connector removal.
7 Identification label.

Measure	VS570	VS575
L1	33.8 (1.33)	30.8 (1.21)
L2	59.4 (2.33)	56.4 (2.22)

RF 1030L 13/02 2016, Bosch Rexroth AG

885

Electric connection

00

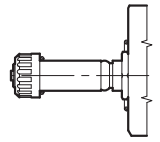

01

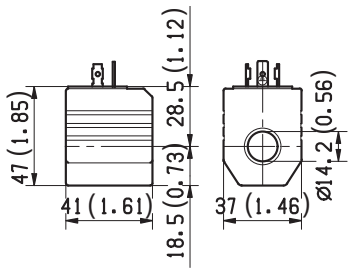

03 Protection class: IP 65 with female connector properly fitted (see drawing).

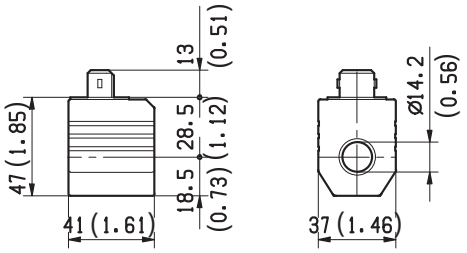

04 Protection class: IP 65 with female connector properly fitted (see drawing).

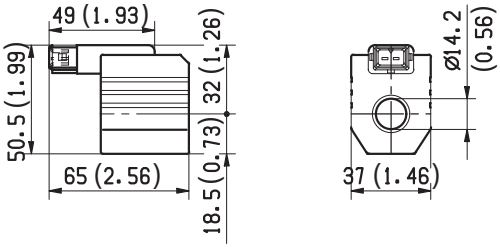

31

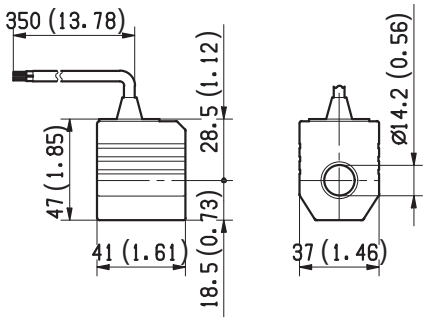

07 Protection class: IP 69 K with female connector properly fitted (see drawing).

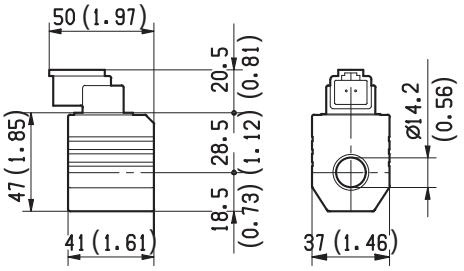

Special directional valves

Designation	Description	Ports/Size	Code	Data sheet	Page
Stand alone 4/3, 4/2 direct acting directional valve	LC1F-Z	G 3/8, SAE 8 / Size 6	LF1_1_	18305-01	889
Stand alone 4/3, 4/2 direct acting directional valve	LC1F-DZ	G 3/8, G 1/2, SAE 8 / Size 6	LF1_2_	18305-02	897
Stand alone 4/3, 4/2 direct acting directional valve	LC2F-DZ	G 1/2, SAE 10 / Size 10	LF2_1_	18305-03	907
Stand alone 4/3, 4/2 solenoid operated directional valve FAN DRIVE	LF1, LF2	G 3/8, G 1/2, SAE 8, SAE 10 / Size 6 / Size 10	LF_	18305-04	915
Steering mode selection valve with electromechanical detent	SMV2.0	G 3/8, G 1/2, SAE 8, Special	LF1_1STR3_	18305-10	927

4/3 - 4/2 Directional valve elements LF1_1... (LC1F-Z)

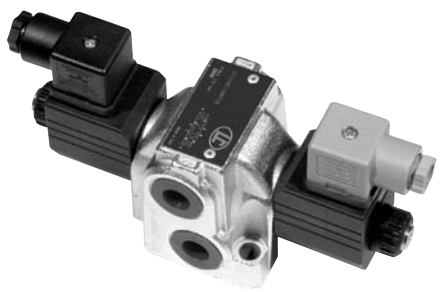

Size 6
Series 00
Maximum operating pressure 310 bar (4500 psi)
Maximum flow 35 l/min (9.25 gpm)
Ports connection G 3/8 - SAE8

General specifications

4 way, 2 or 3 position spool type solenoid operated directional valves.
Stand-alone valve body intended for “in-line” application. Available with a choice of threaded ports; mounting surface with installation holes for direct fitting on the machine structure.
Zinc plated body with yellow trivalent chrome treatment.
Wet pin tubes for DC coils, with push rod for mechanical override; nickel plated surface.
Coils can be rotated 360° around the tube; they can be energized by AC current through special connectors with rectifier (RAC).
Plug-in connectors available: EN 175301-803 (was DIN 43650); AMP Junior; DT04-2P (Deutsch), free leads.
Coils removable.
Manual override (push button or lever type) available as option.
Spool variants (for different hydraulic schemes) are available for both 2 and 3 position versions.

Contents

Ordering details	2
Symbols	2
Functional description	3
Technical data	3
Characteristic curves	5
External dimensions and fittings	6
Electric connection	7

RF 15305/01/02 2016, Bosch Rexroth AG

Ordering details

01	02	03	04	05	06	07	08	09
L	**F**	**1**		**1**				

Family

01	Directional Valve elements CDV	**L**

Type

02	Directional valve 4/3, 4/2	**F**

Size

03	6	**1**

Ports

04	G 3/8	**3**
	SAE 8	**C**

Coil Type

05	C 36	**1**

Spool variants

06	4/3 operated on both sides a and b	**_ 2 _ _**
	4/2 operated on side a only	**_ 3 _ _**
	4/2 operated on side b only	**_ 4 _ _**

Voltage supply		**31**	**07**	**04**	**03**	**01**	**00**	
07	Without coil	–	–	–	–	–	●	**00**
	12V DC	●	●	●	●	●	–	**OB**
	13V DC	–	●	–	–	●	–	**AD**
	24V DC	●	●	●	●	●	–	**OC**
	27V DC	–	●	–	–	●	–	**AC**
	48V DC	–	–	●	–	●	–	**OD**
	110V DC	–	–	–	–	●	–	**OE**
	24V AC (21.5 DC)	–	–	–	–	●	–	**OV**
	110V AC (98 DC)	–	–	–	–	●	–	**OW**
	230V AC (207 DC)	–	–	–	–	●	–	**OZ**

Electric connections

08	Without coils	**00**
	With coils, without mating connector DIN EN 175301-803 [2]	**01**
	With coils, with bi-directional diode, without mating connector vertical Amp-Junior	**03**
	With coils, with bi-directional diode, without mating connector horizontal Amp-Junior	**04**
	With coils, with bi-directional diode, without mating connector DT04-2P	**07**
	With coils and bipolar sheathed lead 350mm (13,8 in) long	**31**

Options

09	Standard	**00**
	Push-button type manual override	**0P**
	Screw type manual override	**0F**

● = Available – = Not available

1) For connectors ordering code see data sheet RE 18325-90.

Symbols

Spool variants

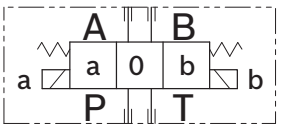

_ 2 _ _

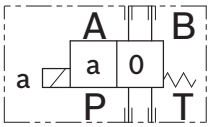

_ 3 _ _

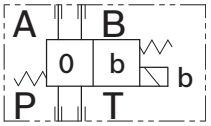

_ 4 _ _

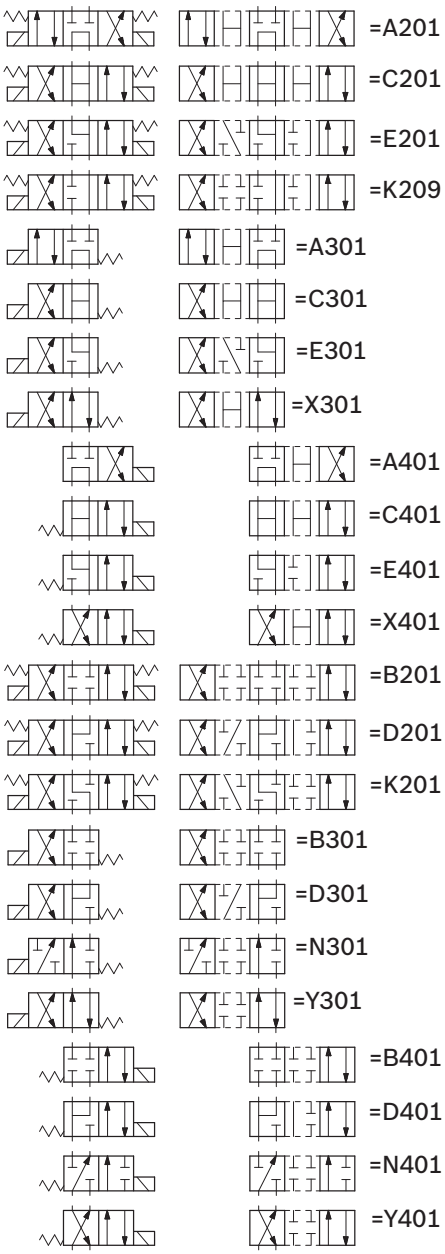

Functional description

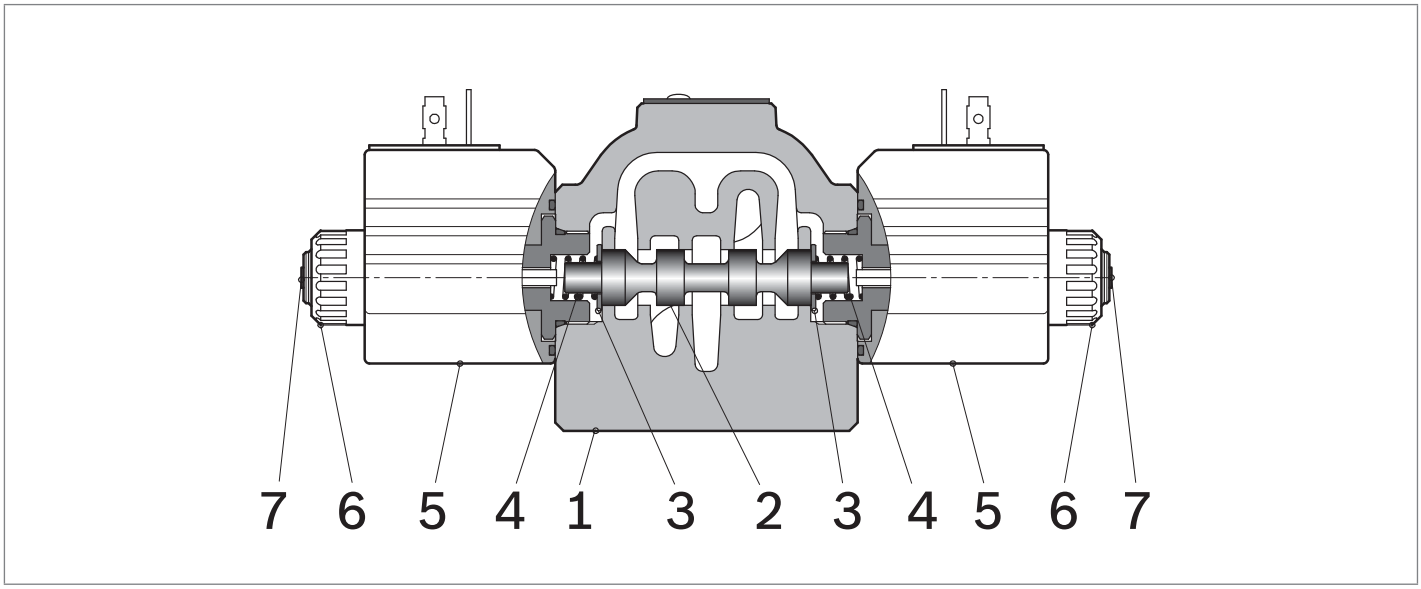

The directional valves LC1F_Z...are compact direct operated solenoid valves which control the start, the stop, the direction of the oil flow. They basically consist of a housing (**1**) with a control spool (**2**), one or two solenoids (**5**), and one or two return springs (**4**).
When energized, each solenoid (**5**) displaces the control spool (**2**) from its neutral-central position to the “a” or “b” position and the oil flow P is diverted to A, or to B. Once the solenoid is de-energized, the return spring (**4**) pushes the spool thrust washer back against the housing and the spool (**2**) returns in its neutral-central position “0”.
Each coil is fastened to the solenoid tube (**5**) by a ring nut (**6**). A pin (**7**) allows to push the spool (**2**) in emergency conditions, when the solenoid cannot be energized, like in case of voltage shortage.

Technical data

General		
Valve weight with 2 solenoids	kg (lbs)	1.85 (4.01)
Valve weight with 1 solenoid	kg (lbs)	1.55 (3.42)
Mounting position		Unrestricted
Ambient Temperature	°C (°F)	–20....+50 (-4....+122) (NBR seals)
Hydraulic		
Maximum pressure at P, A and B ports	bar (psi)	310 (4500)
Maximum pressure at T	bar (psi)	250 (3625)
Maximum inlet flow	l/min (gpm)	35 (9.25)
Maximum flow when using spool type **A201-A301-A401**	l/min (gpm)	30 (7.9)
Hydraulic fluid General properties: it must have physical lubricating and chemical properties suitable for use in hydraulic systems such as, for example:		Mineral oil based hydraulic fluids HL (DIN 51524 part 1). Mineral oil based hydraulic fluids HLP (DIN 51524 part 2). For use of environmentally acceptable fluids (vegetable or polyglycol base) please consult us.
Fluid Temperature	°C (°F)	–20....+80 (-4....+176) (NBR seals)
Permissible degree of fluid contamination		ISO 4572: $\beta_x \geq 75$ X=12...15 ISO 4406: class 20/18/15 NAS 1638: class 9

Viscosity range	mm^2/s	5....420								
Electrical										
Voltage type		DC (AC only with RAC connection)								
Voltage tolerance (nominal voltage)	%	-10 .... +10								
Duty		Continuous, with ambient temperature ≤ 50°C (122°F)								
Coil wire temperature not to be exceeded	°C (°F)	150 (302)								
Insulation class		H								
Compliance with		Low Voltage Directive LVD 73/23/EC (2006/95/EC), 2004/108/EC								
Coil weight with connection EN 175301-803	kg (lbs)	0.215 (0.44)								
Voltage	V	12	13	24	27	48	110	24 +RAC (21,5)	110 +RAC (98)	230 +RAC (207)
Voltage type		DC	DC	DC	DC	DC	DC	DC	DC	DC
Power consumption	W	26	26	26	26	26	26	29	29	29
Current (nominal at 20 °C (68 °F))	A	2.15	2.00	1.10	1.00	0.54	0.27	1.20	0.29	0.14
Resistance (nominal at 20 °C (68 °F))	Ω	5.5	6.5	22	28	89	413	18	338	1430

Note
For applications with different specifications consult us.

Code	Voltage (V)	Connector type	Coil description	Marking	Coil Mat no.
OB 01	12 DC	EN 175301-803 (Ex. DIN 43650)	C3601 12DC	12 DC	R933000044
OB 03	12 DC	AMP JUNIOR	C3603 12DC	12 DC	R933000047
OB 04	12 DC	AMP JUNIOR Horizontal	C3604 12DC	12 DC	R933002913
OB 07	12 DC	DEUTSCH DT 04-2P	C3607 12DC	12 DC	R933000048
OB 31	12 DC	Cable 350 mm long	C3631 12DC	12 DC	R933000045
AD 01	13 DC	EN 175301-803 (Ex. DIN 43650)	C3601 13DC	13 DC	R933000051
AD 07	13 DC	DEUTSCH DT 04-2P	C3607 13DC	13 DC	R933000049
OC 01	24 DC	EN 175301-803 (Ex. DIN 43650)	C3601 24DC	24 DC	R933000053
OC 03	24 DC	AMP JUNIOR	C3603 24DC	24 DC	R933000057
OC 04	24 DC	AMP JUNIOR Horizontal	C3604 24DC	24 DC	R933002914
OC 07	24 DC	DEUTSCH DT 04-2P	C3607 24DC	24 DC	R933000058
OC 31	24 DC	Cable 350 mm long	C3637 24DC	24 DC	R933000055
AC 01	27 DC	EN 175301-803 (Ex. DIN 43650)	C3601 27DC	27 DC	R933000056
AC 07	27 DC	DEUTSCH DT 04-2P	C3607 27DC	27 DC	R933000050
OD 01	48 DC	EN 175301-803 (Ex. DIN 43650)	C3601 48DC	48 DC	R933000059
OD 04	48 DC	AMP JUNIOR Horizontal	C3604 48DC	48 DC	R933002915
OE 01	110 DC	EN 175301-803 (Ex. DIN 43650)	C3601 110DC	110 DC	R933000061
OV 01	24 RAC	EN 175301-803 (Ex. DIN 43650)	C3601 21.5DC	21.5 DC	R933000054
OW 01	110 RAC	EN 175301-803 (Ex. DIN 43650)	C3601 98DC	98 DC	R933000060
OZ 01	230 RAC	EN 175301-803 (Ex. DIN 43650)	C3601 207DC	207 DC	R933000062

Characteristic curves

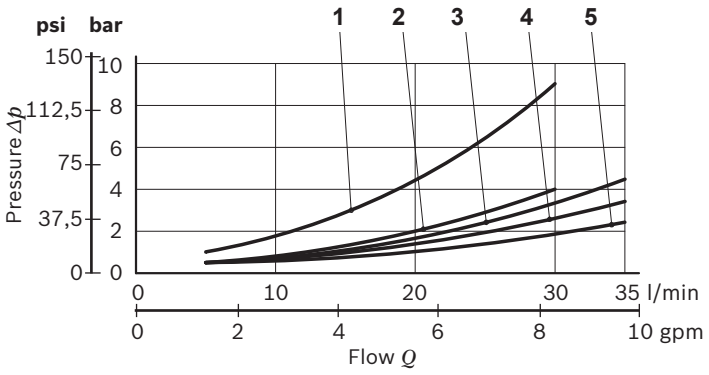

Spool Variant	Curve no.				
	P>T	P>A	P>B	A>T	B>T
A201, A301, A401	2	1	1	1	1
B201, B301, B401	-	4	4	3	3
C201. C301, C401	5	5	5	5	5
D201, D301, D401	-	4	4	3	3
E201, E301, E401	-	3	3	5	5
K201, K209	-	4	4	4	4
N301, N401	-	4	4	-	-
X301, X401, Y301, Y401	-	4	3	3	3

Measured with hydraulic fluid ISO-VG32 at 45° ±5 °C (113° ±9 °F); ambient temperature 20 °C (68 °F).

Performance limits

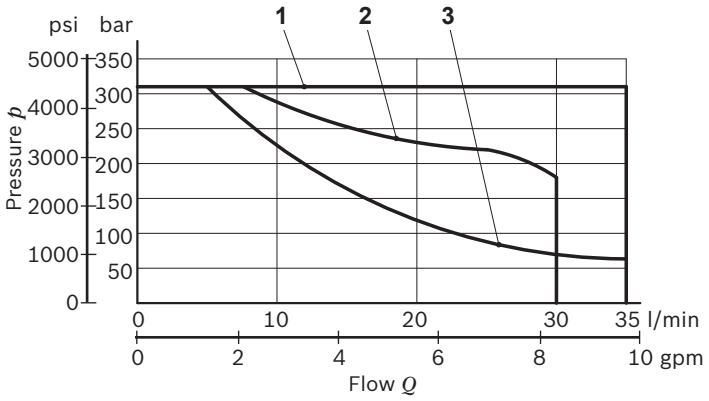

Spool Variant	Curve no.
B201, B301, B401, C201. C301, C401, D201, D301, D401, E201, E301, E401, K201, K209, X301, X401, Y301, Y401	1
A201, A301, A401	2
N301, N401	3

The performance curves are measured with flow going across and coming back, like P>A and B>T. With unequal IN and OUT flow, the actual total Δp can be considerably lower.

4

External dimensions and fittings

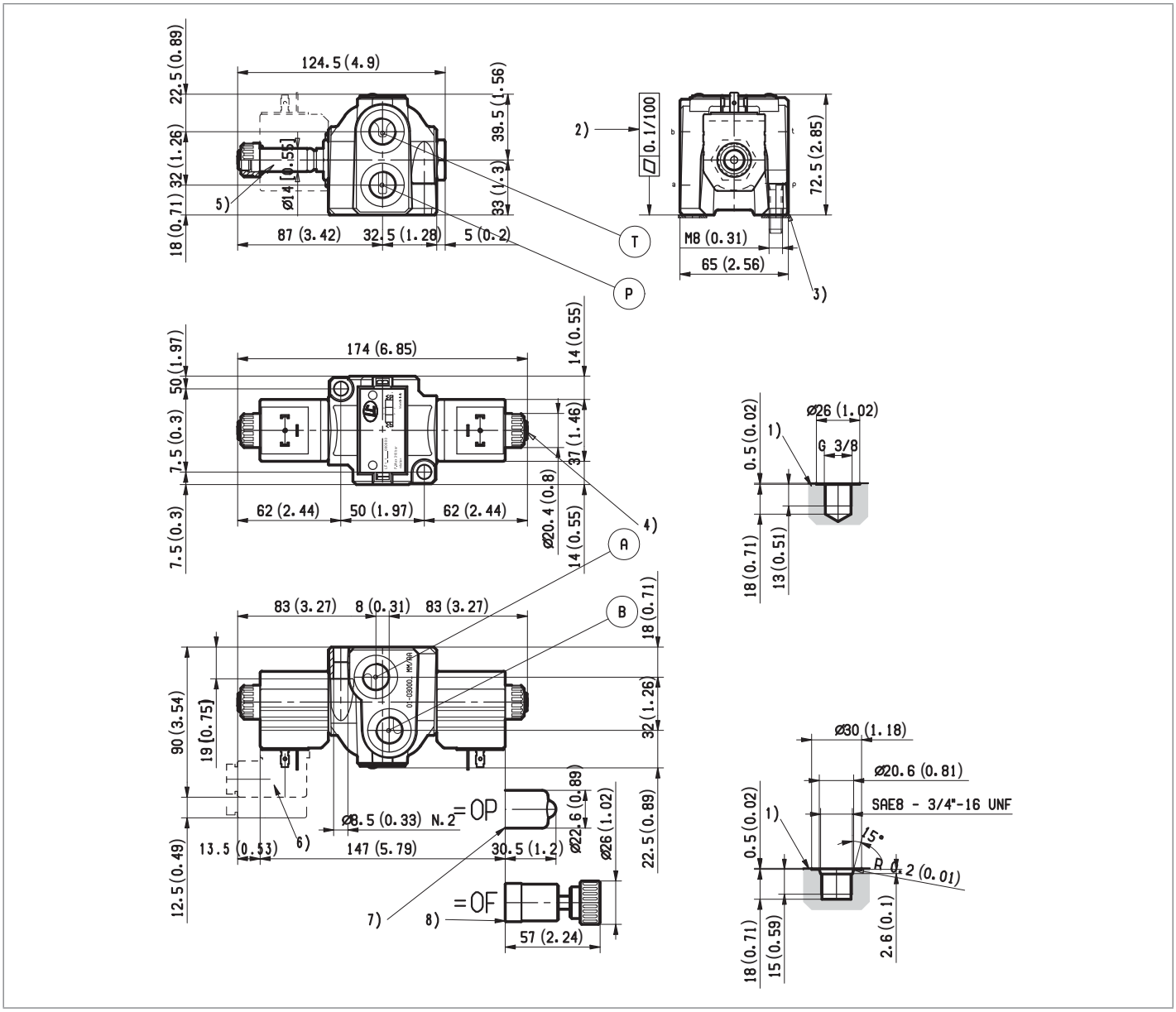

1 Work ports A, B, P, and T.
2 Flatness needed for mounting surface.
3 Two through installation holes reccomended screws M8x30 DIN 8.8: torque 20-22 Nm (14.7-16.2 ft-lb).
Must be ordered separately.
4 Ring nut for coil locking. Torque 3-4 Nm (2.2-3.0 ft-lb).
5 Solenoid tube Ø 14 mm (0.55 inch).
6 Clearance needed for connector removal.
7 Optional push-button manual override, 0P type, for spool opening: it is pressure stuck to the ring nut for coil locking.
Mat no. R933000042.
8 Optional screw manual override, 0F type, for spool opening: it is screwed (torque 6-7 (4.4-5.2 ft-lb)) to the tube as replacement of the coil ring nut. Mat no. R933000021.

Electric connection

00

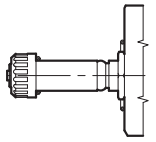

01

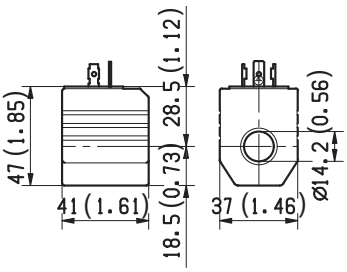

03 Protection class: IP 65 with female connector properly fitted (see drawing).

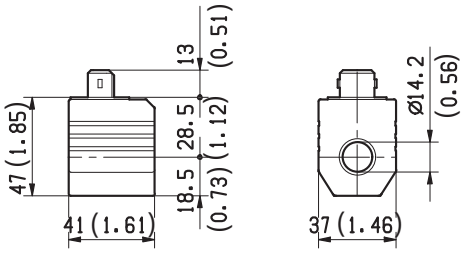

04 Protection class: IP 65 with female connector properly fitted (see drawing).

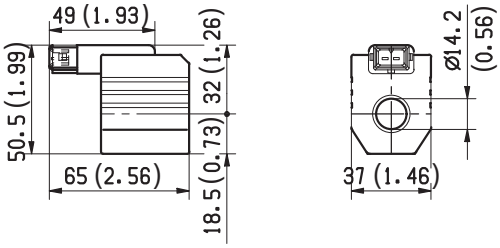

31

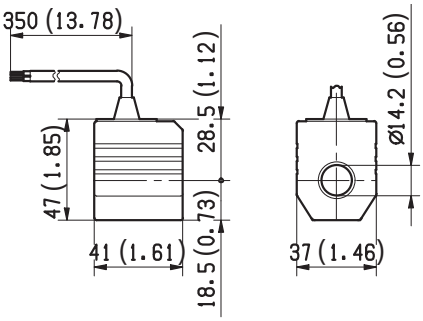

07 Protection class: IP 69 K with female connector properly fitted (see drawing).

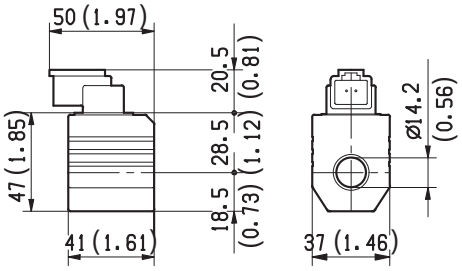

4

Stand alone 4/3, 4/2 direct acting directional valve LF1_2... (LC1F-DZ)

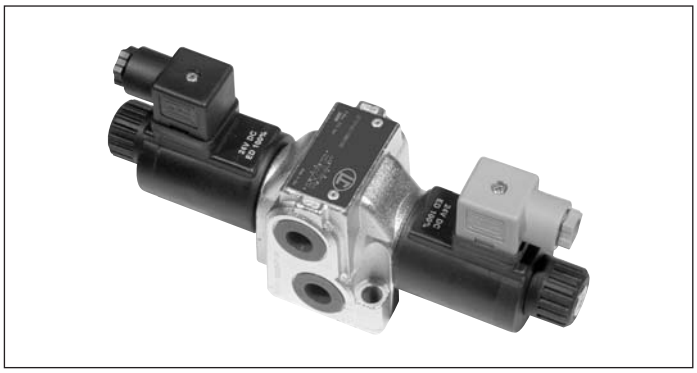

Size 6
Series 00
Maximum operating pressure 310 bar (4500 psi)
Maximum flow 70 l/min (18.5 gpm)
Port connections G 3/8 - G 1/2 - SAE8

General specifications

4 way, 2 or 3 position spool type solenoid operated directional valves.
Stand-alone valve body intended for “in-line” application. Available with a choice of threaded ports; mounting surface with installation holes for direct fitting on the machine structure.
Zinc plated body with yellow trivalent chrome treatment.
Wet pin tubes for DC coils, with push rod for mechanical override; nickel plated surface.
Coils can be rotated 360° around the tube; they can be energized by AC current through special connectors with rectifier (RAC).
Plug-in connectors available: EN 175301-803 (was DIN 43650); AMP Junior; DT04-2P (Deutsch), free leads.
Coils removable.
Manual override (push button or lever type) available as option.
Spool variants (for different hydraulic schemes) are available for both 2 and 3 position versions.

Contents

Ordering details	2
Spool variants	3
Functional description	4
Technical data	4
Characteristic curves	6
External dimensions and fittings	7
Electric connection	9

4

Ordering details

01	02	03	04	05	06	07	08	09
L	**F**	**1**		**2**				

Family

01	Directional Valve elements CDV	**L**

Type

02	Directional valve 4/3, 4/2	**F**

Size

03	6	**1**

Ports

04	G 3/8 DIN 3852	**3**
	G 1/2 DIN 3852	**2**
	3/4”-16 UNF (SAE8)	**C**

Coil Type

05	C 45	**2**

Spool variants[1)]

06	4/3 operated on both sides a and b	**_ 2 _ _**
	4/2 operated on side a only	**_ 3 _ _**
	4/2 operated on side b only	**_ 4 _ _**

Voltage supply		**07**	**03**	**01**	**00**	
07	Without coil	–	–	–	●	**00**
	12V DC	●	●	●	–	**OB**
	13V DC	●	●	●	–	**AD**
	24V DC	●	●	●	–	**OC**
	27V DC	●	●	●	–	**AC**
	48V DC	–	–	●	–	**OD**
	110V DC	–	–	●	–	**OE**
	24V AC (21.5 DC)	–	–	●	–	**OV**
	110V AC (98 DC)	–	–	●	–	**OW**
	230V AC (207 DC)	–	–	●	–	**OZ**

Electric connections

08	Without coils	**00**
	With coils, without mating connector DIN EN 175301-803 [2)]	**01**
	With coils, with bi-directional diode, without mating connector vertical Amp-Junior	**03**
	With coils, with bi-directional diode, without mating connector DT04-2P	**07**

Options

09	Standard	**00**
	Push-button type manual override	**0P**
	Screw type manual override	**0F**
	Lever type manual override [3)]	**_ _**

● = Available – = Not available

1) The required hydraulic symbol and spool variant can be chosen by consulting page 3.
2) For connectors ordering code see data sheet RE 18325-90.
3) Each different option for the type of emergency chosen implies a specific ordering code (refer to page 8).

Spool variants

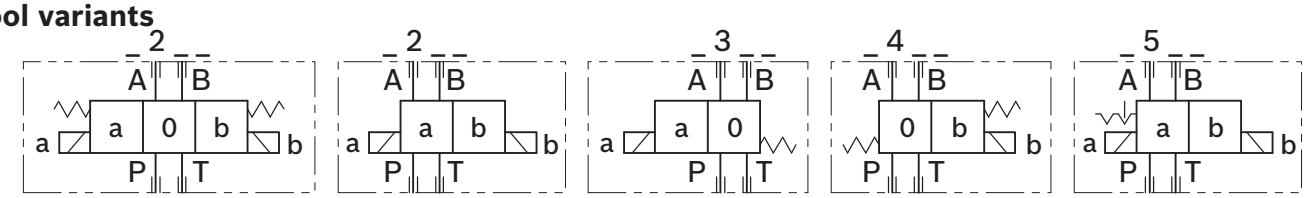

=A201		=A211	
=C201		=B201	
=E201		=D201	
=F201		=E2R1	
=G209		=G201	
=K209		=K201	
=V201		=U201	
=L201		=M201	
=N201		=A581	
=L501		=M501	
=N501			
=A301		=A311	
=B301		=A361	
=C301		=B361	
=D301		=C361	
=E301		=D361	
=K301		=E361	
=T301		=N301	
=X301		=T361	
=U369		=Y301	
=A401		=A411	
=A471		=B471	
=B401		=C471	
=C401		=D471	
=D401		=E471	
=E401		=N401	
=K401		=T479	
=T409		=Y401	
=X401			
=A2EA		=B2EA	
=E2EA		=F2EA	

Functional description

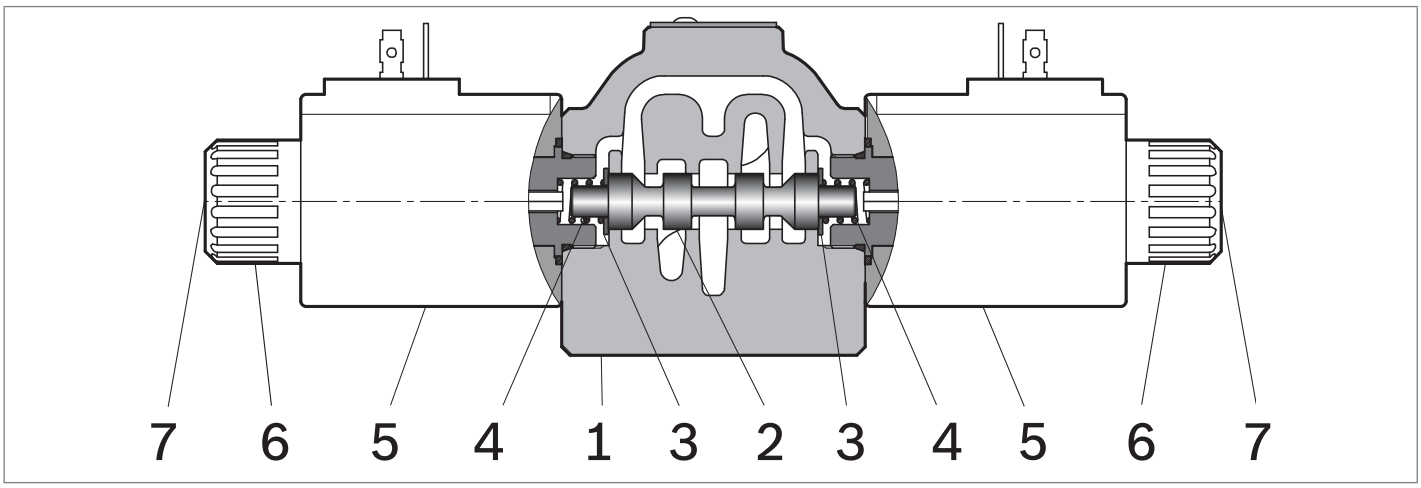

The directional valves LC1F_DZ are compact direct operated solenoid valves which control the start, the stop, the direction of the oil flow. They basically consist of a housing (**1**) with a control spool (**2**), one or two solenoids (**5**), and one or two return springs (**4**).
When energized, each solenoid (**5**) displaces the control spool (**2**) from its neutral-central position to the “a” or “b” position and the oil flow P is diverted to A, or to B.

Once the solenoid is de-energized, the return spring (**4**) pushes the spool thrust washer back against the housing and the spool (**2**) returns in its neutral-central position “0”. Each coil is fastened to the solenoid tube (**5**) by a ring nut (**6**). A pin (**7**) allows to push the spool (**2**) in emergency conditions, when the solenoid cannot be energized, like in case of voltage shortage.

Technical data

General		
Valve element with 2 solenoids	kg (lbs)	2.23 (4.92)
Valve element with 1 solenoid	kg (lbs)	1.75 (3.86)
Valve element with 2 solenoids, with lever type emergency	kg (lbs)	2.53 (5.58)
Valve element with 1 solenoid, with lever type emergency	kg (lbs)	2.00 (4.41)
Mounting position		Unrestricted. Horizontal with spool type _5__
Ambient Temperature	°C (°F)	–20....+50 (-4....+122) (NBR seals)
Hydraulic		
Maximum pressure at P, A and B ports	bar (psi)	310 (4500)
Maximum pressure at T [1)]	bar (psi)	250 (3625)
Maximum pressure on T when using spool type A211, A311, A411	bar (psi)	150 (2175)
Max pressure, with lever type emergency at T	bar (psi)	100 (1450)
Maximum inlet flow	l/min (gpm)	70 (18.5)
Maximum flow when using spool type A201, A301, A361, A401, A471, A2EA, G201, G209	l/min (gpm)	50 (13.2)
Maximum flow when using spool type A211, A311, A411 l/min (gpm)	l/min (gpm)	40 (10.6)
Hydraulic fluid General properties: it must have physical lubricating and chemical properties suitable for use in hydraulic systems such as, for example:		Mineral oil based hydraulic fluids HL (DIN 51524 part 1). Mineral oil based hydraulic fluids HLP (DIN 51524 part 2). For use of environmentally acceptable fluids (vegetable or polyglycol base) please consult us.

Fluid Temperature	°C (°F)	–20....+80 (-4....+176) (NBR seals)
Permissible degree of fluid contamination		ISO 4572: $\beta_x \geq 75$ X=12...15 ISO 4406: class 20/18/15 NAS 1638: class 9
Viscosity range	mm^2/s	5....420
Maximum leakage on A and B ports (P and T pressurised) when using A211 type spools	cc/min (in^3/min)	8 - 20 (0.49 - 1.21) (100 bar (1450 psi))

1) Variation on T line pressure for circuits 5_ with mechanical detent can cause autoinversion.

Electrical										
Voltage type		DC (AC only with RAC connection)								
Voltage tolerance (nominal voltage)	%	-10 .... +10								
Duty		Continuous, with ambient temperature ≤ 50°C (122°F)								
Coil wire temperature not to be exceeded	°C (°F)	150 (302)								
Insulation class		H								
Compliance with		Low Voltage Directive LVD 73/23/EC (2006/95/EC), 2004/108/EC								
Coil weight with connection EN 175301-803	kg (lbs)	0.335 (0.74)								
Voltage	V	12	13	24	27	48	110	24 +RAC (21,5)	110 +RAC (98)	230 +RAC (207)
Voltage type		DC	DC	DC	DC	DC	DC	DC	DC	DC
Power consumption	W	33	31	33	33	33	35	33	33	35
Current (nominal at 20 °C (68 °F))	A	2.8	2.3	1.4	1.2	0.7	0.32	1.6	0.34	0.16
Resistance (nominal at 20 °C (68 °F))	Ω	4.24	5.42	17	21.8	69.8	341.8	13.6	285	1229

Note
For applications with different specifications consult us

Code	Voltage [V]	Connector type	Coil description	Marking	Coil Mat no.
OB 01	12 DC	EN 175301-803 (Ex. DIN 43650)	C4501 12DC	12 DC	R933000026
OB 03	12 DC	AMP JUNIOR	C4503 12DC	12 DC	R933000027
OB 07	12 DC	DEUTSCH DT 04-2P	C4507 12DC	12 DC	R933000030
AD 01	13 DC	EN 175301-803 (Ex. DIN 43650)	C4501 13DC	13 DC	R933000028
AD 03	13 DC	AMP JUNIOR	C4503 13DC	13 DC	R933000029
AD 07	13 DC	DEUTSCH DT 04-2P	C4507 13DC	13 DC	R933000031
OC 01	24 DC	EN 175301-803 (Ex. DIN 43650)	C4501 24DC	24 DC	R933000034
OC 03	24 DC	AMP JUNIOR	C4503 24DC	24 DC	R933003630
OC 07	24 DC	DEUTSCH DT 04-2P	C4507 24DC	24 DC	R933000032
AC 01	27 DC	EN 175301-803 (Ex. DIN 43650)	C4501 27DC	27 DC	R933000035
AC 03	27 DC	AMP JUNIOR	C4503 27DC	27 DC	R933000036
AC 07	27 DC	DEUTSCH DT 04-2P	C4507 27DC	27 DC	R933000033
OD 01	48 DC	EN 175301-803 (Ex. DIN 43650)	C4501 48DC	48 DC	R933000037
OE 01	110 DC	EN 175301-803 (Ex. DIN 43650)	C4501 110DC	110 DC	R933000040
OV 01	24 RAC	EN 175301-803 (Ex. DIN 43650)	C4501 21.5DC	21.5 DC	R933000038
OW 01	110 RAC	EN 175301-803 (Ex. DIN 43650)	C4501 98DC	98 DC	R933000039
OZ 01	230 RAC	EN 175301-803 (Ex. DIN 43650)	C4501 207DC	207 DC	R933000041

Characteristic curves

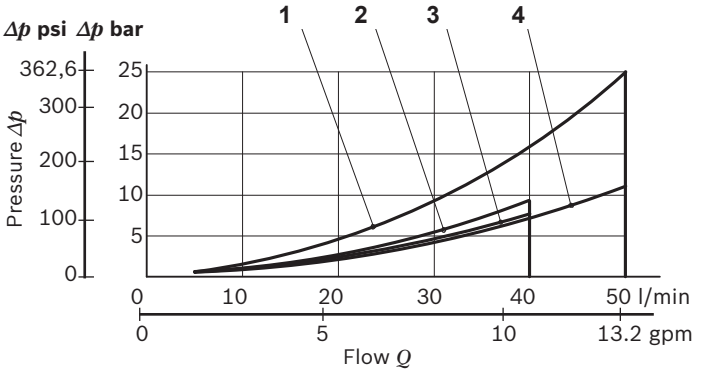

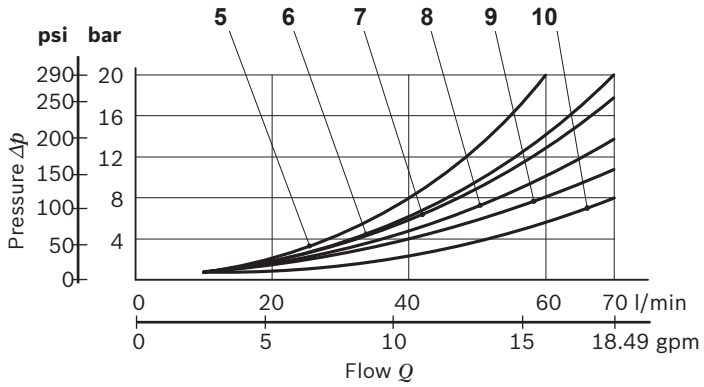

Spool Variant	Curve no.				
	P>T	P>A	P>B	A>T	B>T
A201, A301, A401, A361, A471,A2EA	4	1	1	1	1
A211,A311,A411,	2	3	3	3	3
A581	1	1	1	1	1
B201, B301, B401, B361, B471, B2EA		9	8	7	7
C201. C301, C401, C361, C471, C2EA	9	10	9	8	8
D201, D301, D401, D361, D471		10	10	9	9
E201, E301, E401, E361, E471		8	8	9	9
E2R1		8	8	9	9
F201, F2EA		7	7		
G201,G209	4	1	1	1	1
K201, K209, K301, K401		8	8	7	7
L201, L501		9	8	8	8
M201, M501		8	7	7	7
N201, N501		9	9		
N301, N401		7	7		
T301, T361, T409, T479				7	7
U201, U369		9	5	7	b>a 5
X301, X401, Y301, Y401		8	8	7	7
V201	9	9	9	6	8

Measured with hydraulic fluid ISO-VG32 at 45° ±5 °C (113° ±9 °F); ambient temperature 20 °C (68 °F).

Performance limits

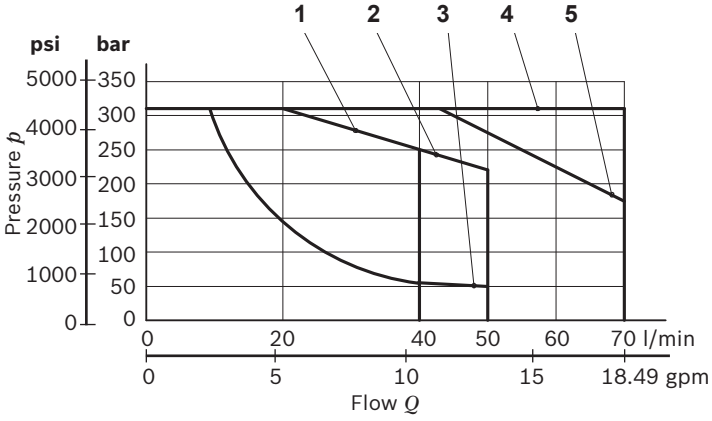

Spool Variant	Curve no.
A211, A311, A411, A581	1
A201, A301, A401	2
N301, N401, V201	3
B201, B301, B401, B361, B471, B2EA, C201. C301, C401, C361, C471, C2EA, D201, D301, D401, D361, D471, E201, E301, E401, E361, E471, E2R1, F201, F2EA, G201,G209, K201, K209, K301, K401, U201, U369, T301, T361, T409, T479, N201, N501, M201, M501, L201, L501	4
X301,X401, Y301, Y401	5

The performance curves are measured with flow going across and coming back, like P>A and B>T. With “lever type” emergency control, the performance limits are slightly lower.

External dimensions and fittings

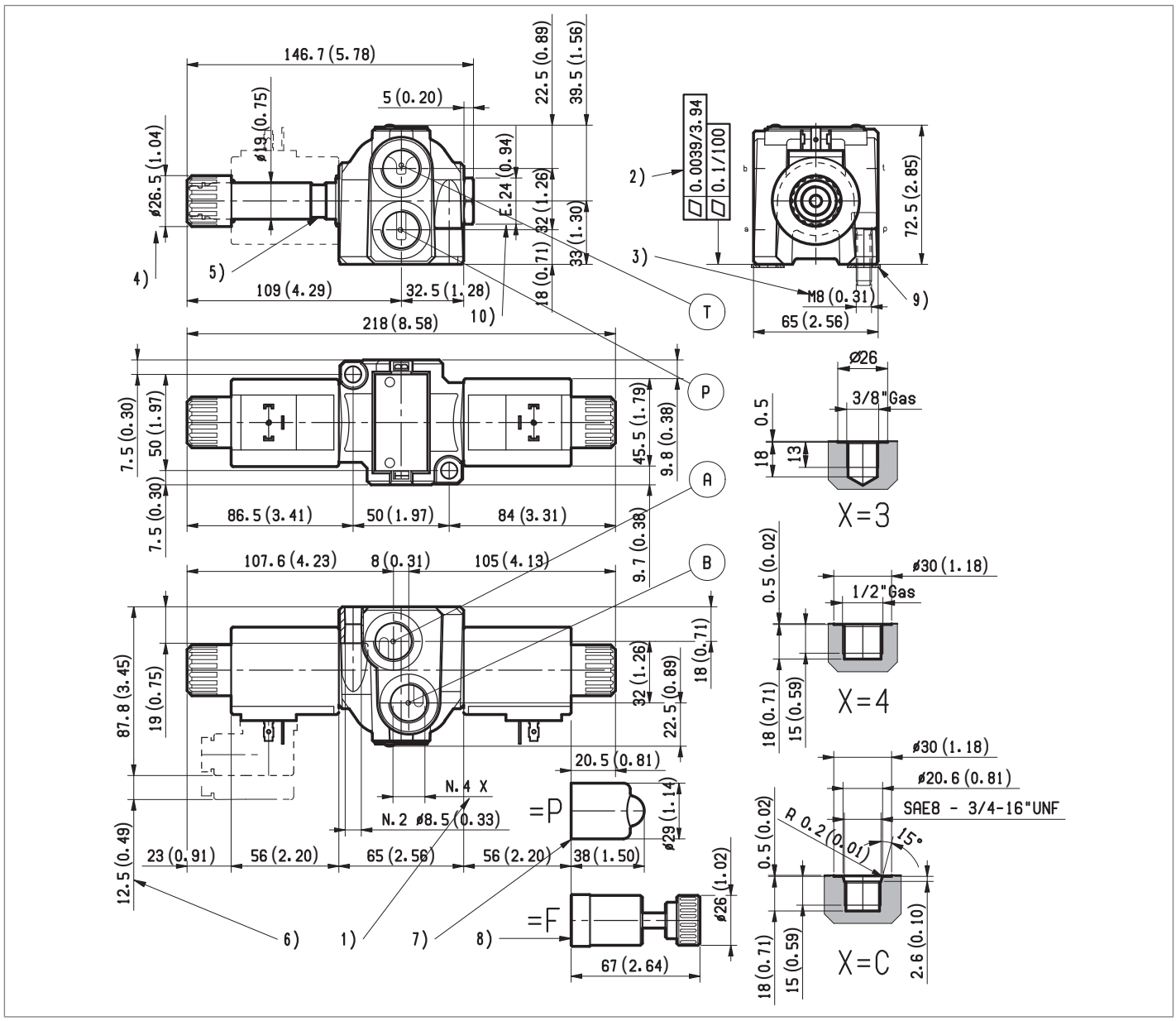

1 Work ports A, B, P, and T.
2 Flatness needed for mounting surface.
3 Two through installation holes reccomended screws M8x30 DIN 8.8. Must be ordered separately.
4 Ring nut for coil locking. Torque 3-4 Nm (2.2-3 ft-lb).
5 Solenoid tube Ø 19 mm (0.75 inch).
6 Clearance needed for connector removal.
7 Optional push-button manual override for spool opening: it is pressure stuck to the ring nut for coil locking. Code R933000043.
8 Optional screw type manual override for spool opening: it is screwed (torque 6-7 (4.4-5.2 ft-lb)) to the tube as replacement of the coil ring nut. Mat. no R933007215.
9 Kit ring nut for coil locking with seals. Mat no. R933003529.
10 Plug for 2 positions versions (4/2).

Dimensions [mm (inches)]

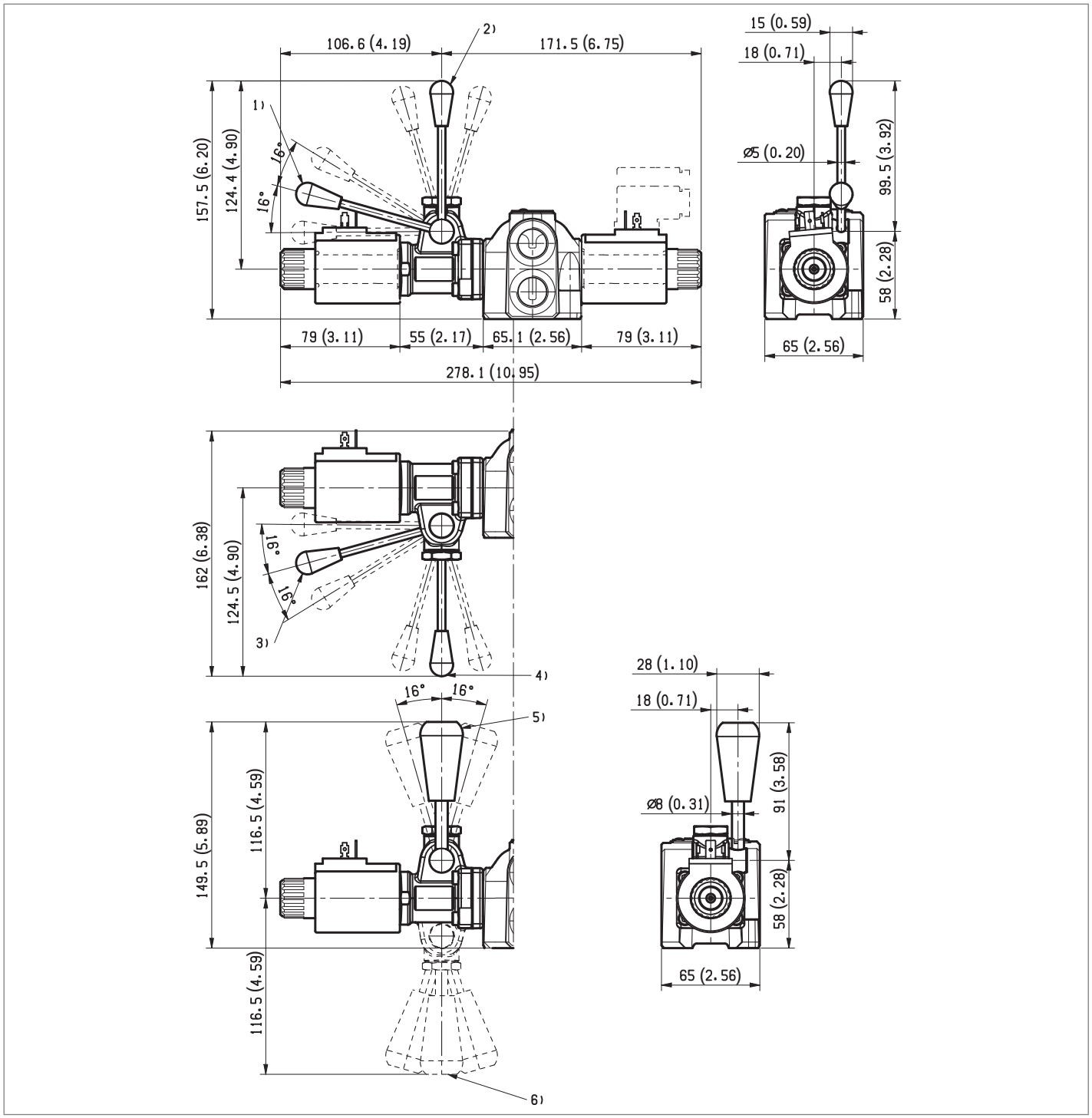

1 Ordering Details: HA (if fitted to side A) or HB (if fitted to side B).
2 Ordering Details: VA (if fitted to side A) or VB (if fitted to side B).
3 Ordering Details: H1 (if fitted to side A) or H9 (if fitted to side B).
4 Ordering Details: V1 (if fitted to side A) or V9 (if fitted to side B).
5 Ordering Details: XA (if fitted to side A) or XB (if fitted to side B).
6 Ordering Details: X1 (if fitted to side A) or X9 (if fitted to side B).

Electric connection

00

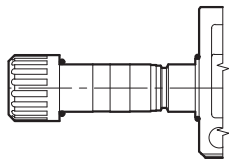

01

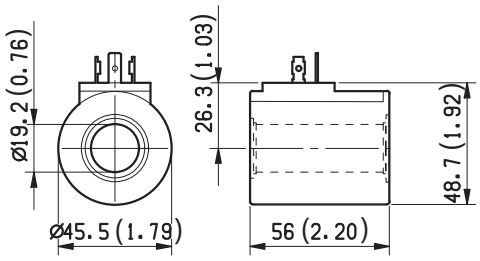

03 Protection class: IP 65 with female connector properly fitted (see drawing).

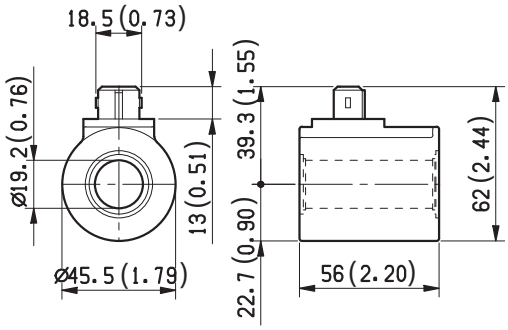

07 Protection class: IP 69 K with female connector properly fitted (see drawing).

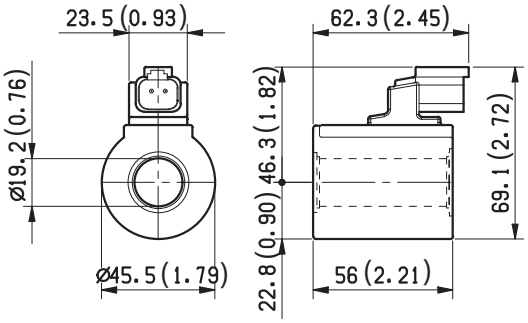

4

Stand alone 4/3, 4/2 direct acting directional valve LF2_1... (LC2F-DZ)

Size 10
Series 00
Maximum operating pressure 250 bar (3600 psi)
Maximum flow 90 l/min (23.8 gpm)
Port connections G 1/2 – SAE10

General specifications

4 way, 2 or 3 position spool type solenoid operated directional valves.
Stand-alone valve body intended for “in-line” application. Available with a choice of threaded ports; mounting surface with installation holes for direct fitting on the machine structure.
Zinc plated body with yellow trivalent chrome treatment.
Wet pin tubes for DC coils, with push rod for mechanical override; nickel plated surface.
Coils can be rotated 360° around the tube; they can be energized by AC current through special connectors with rectifier (RAC).
Plug-in connectors available: EN 175301-803 (was DIN 43650); AMP Junior; DT04-2P (Deutsch), free leads.
Coils removable.
Manual override (push button or lever type) available as option.
Spool variants (for different hydraulic schemes) are available for both 2 and 3 position versions.

Contents

Ordering details	2
Symbols	2
Functional description	3
Technical data	3
Characteristic curves	5
External dimensions and fittings	6
Electric connection	7

4

RF 18305/03/04 2016, Bosch Rexroth AG

Ordering details

01	02	03	04	05	06	07	08	09
L	**F**	**2**		**1**				

Family

01	Directional Valve elements CDV	**L**

Type

02	Directional valve 4/3, 4/2	**F**

Size

03	10	**2**

Ports

04	G 1/2	**2**
	7/8” - 14 UNF (SAE10)	**D**

Coil Type

05	C 65	**1**

Spool variants

06	4/3 operated on both sides a and b	**_ 2 _ _**
	4/2 operated on side a only	**_ 3 _ _**
	4/2 operated on side b only	**_ 4 _ _**

Voltage supply		**07**	**03**	**01**	**00**	
07	Without coil	–	–	–	●	**00**
	12V DC	●	●	●	–	**OB**
	13V DC	●	–	●	–	**AD**
	24V DC	●	●	●	–	**OC**
	27V DC	●	–	●	–	**AC**

Electric connections

08	Without coils	**00**
	With coils, without mating connector DIN EN 175301-803 [1]	**01**
	With coils, with bi-directional diode, without mating connector vertical Amp-Junior	**03**
	With coils, with bi-directional diode, without mating connector DT04-2P	**07**

Options

09	Standard	**00**
	Push-button type manual override	**0P**
	Screw type manual override	**0F**

● = Available – = Not available

1) For connectors ordering code see data sheet RE 18325-90.

Symbols

Spool variants

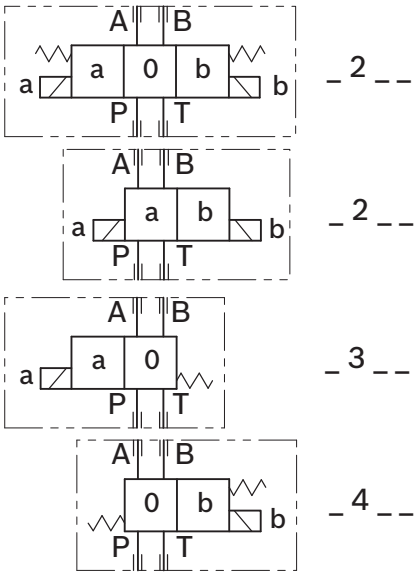

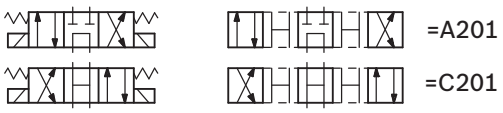

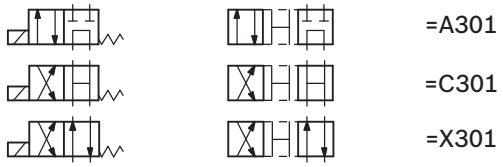

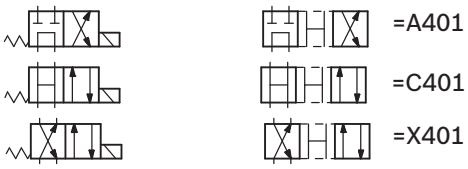

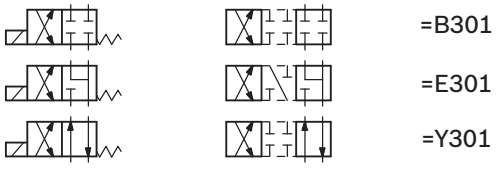

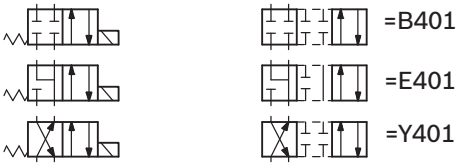

Functional description

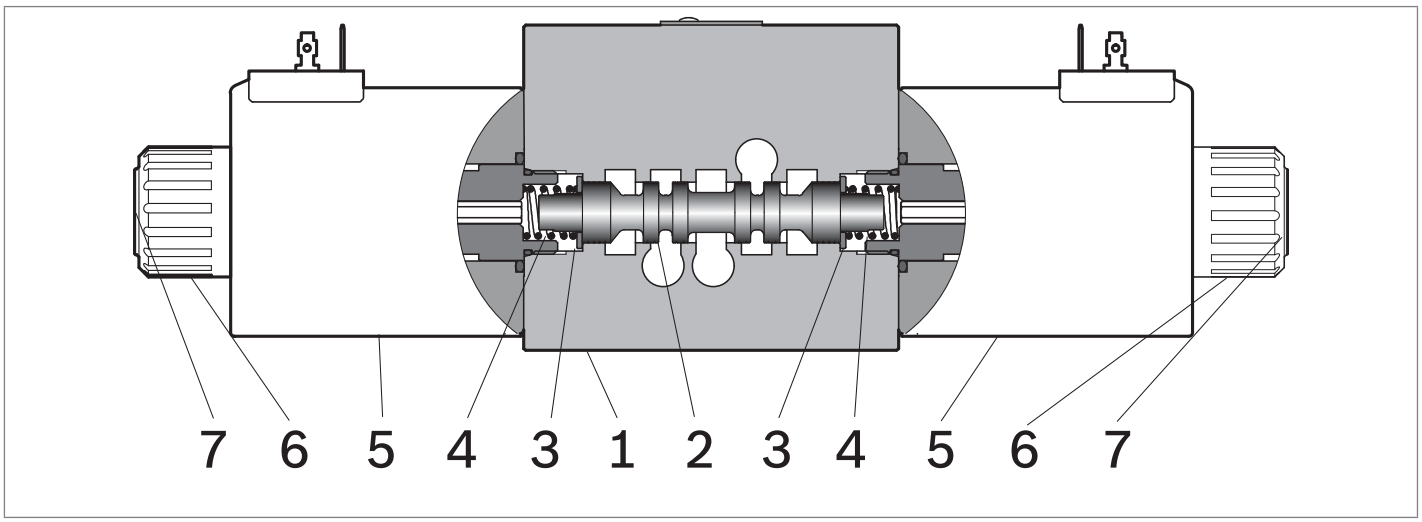

The directional valves LC2F_DZ are compact direct operated solenoid valves which control the start, the stop, the direction of the oil flow. They basically consist of a housing (**1**) with a control spool (**2**), one or two solenoids (**5**), and one or two return springs (**4**).
When energized, each solenoid (**5**) displaces the control spool (**2**) from its neutral-central position to the “a” or “b” position and the oil flow P is diverted to A, or to B. Once the solenoid is de-energized, the return spring (4) pushes the spool thrust washer back against the housing and the spool (**2**) returns in its neutral-central position “0”.
Each coil is fastened to the solenoid tube (**5**) by a ring nut (**6**). A pin (**7**) allows to push the spool (**2**) in emergency conditions, when the solenoid cannot be energized, like in case of voltage shortage.

Technical data

General		
Valve weight with 2 solenoids	kg (lbs)	7.45 (16.42)
Valve weight with 1 solenoid	kg (lbs)	5.85 (12.9)
Ambient Temperature	°C (°F)	–20....+50 (-4....+122) (NBR seals)
Hydraulic		
Maximum pressure at P, A and B ports	bar (psi)	250 (3626)
Maximum pressure at T	bar (psi)	210 (3045)
Maximum inlet flow	l/min (gpm)	90 (23.8)
Maximum flow when using spool type A201-A301-A401	l/min (gpm)	80 (21.1)
Hydraulic fluid General properties: it must have physical lubricating and chemical properties suitable for use in hydraulic systems such as, for example:		Mineral oil based hydraulic fluids HL (DIN 51524 part 1). Mineral oil based hydraulic fluids HLP (DIN 51524 part 2). For use of environmentally acceptable fluids (vegetable or polyglycol base) please consult us.
Fluid Temperature	°C (°F)	–20....+80 (-4....+176) (NBR seals)
Permissible degree of fluid contamination		ISO 4572: $\beta_x \geq 75$ X=12...15 ISO 4406: class 20/18/15 NAS 1638: class 9
Viscosity range	mm^2/s	5....420

4

Electrical					
Voltage type		DC			
Voltage tolerance (nominal voltage)	%	-10 .... +10			
Duty		Continuous, with ambient temperature ≤ 50°C (122°F)			
Coil wire temperature not to be exceeded	°C (°F)	150 (302)			
Maximum frequency	Hz	2			
Insulation class		H			
Compliance with		Low Voltage Directive LVD 73/23/EC (2006/95/EC), 2004/108/EC			
Coil weight with connection EN 175301-803	kg (lbs)	1.05 (2.3)			
Voltage	V	12	13	24	27
Voltage type		DC	DC	DC	DC
Power consumption	W	44	44	44	44
Current (nominal at 20 °C (68 °F))	A	3.6	3.4	1.8	1.6
Resistance (nominal at 20 °C (68 °F))	Ω	3.2	3.6	12.8	16.8

Note
For applications with different specifications consult us.

Code	Voltage [V]	Connector type	Coil description	Marking	Coil Mat no.
OB 01	12 DC	EN 175301-803 (Ex. DIN 43650)	C6501 12DC	12 DC	R933000100
OB 03	12 DC	AMP JUNIOR	C6503 12DC	12 DC	R933000119
OB 07	12 DC	DEUTSCH DT 04-2P	C6507 12DC	12 DC	R933000107
AD 01	13 DC	EN 175301-803 (Ex. DIN 43650)	C6501 13DC	13 DC	R933000101
AD 07	13 DC	DEUTSCH DT 04-2P	C6507 13DC	13 DC	R933000112
OC 01	24 DC	EN 175301-803 (Ex. DIN 43650)	C6501 24DC	24 DC	R933000102
OC 03	24 DC	AMP JUNIOR	C6503 24DC	24 DC	R933000120
OC 07	24 DC	DEUTSCH DT 04-2P	C6507 24DC	24 DC	R933000111
AC 01	27 DC	EN 175301-803 (Ex. DIN 43650)	C6501 27DC	27 DC	R933000103
AC 07	27 DC	DEUTSCH DT 04-2P	C6507 27DC	27 DC	R933000113

Characteristic curves

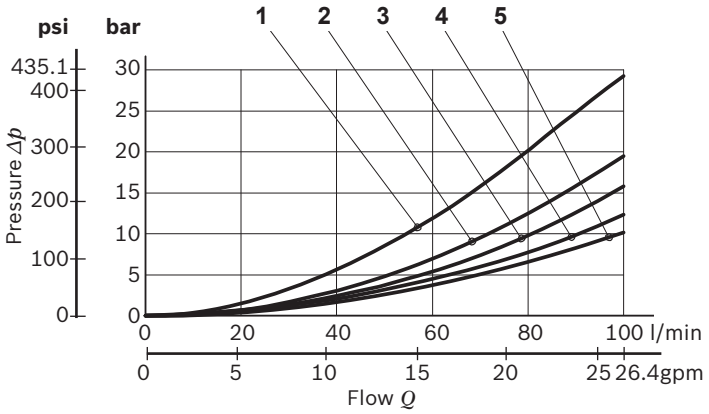

Spool Variant	Curve no.				
	P>T	P>A	P>B	A>T	B>T
A201,A301,A401	2	1	1	1	1
B201,B301,B401		4	4	3	3
C201,C301,C401	5	5	5	3	3
B201, B301, B401, B361, E201,E301,E401		4	4	3	3
X301,Y301,X401,Y401		5	4	4	3

Measured with hydraulic fluid ISO-VG32 at 45° ±5 °C (113° ±9 °F); ambient temperature 20 °C (68 °F).

Performance limits

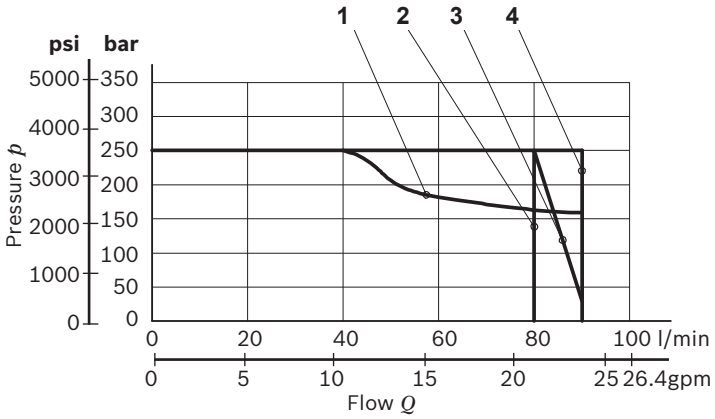

Spool Variant	Curve no.
E201, E301, E401	1
A201, A301, A401	2
X301, Y301, X401, Y401	3
B201, B301, B401, C201, C301, C401	4

The performance curves are measured with flow going across and coming back, like P>A and B>T. With unequal IN and OUT flow, the actual total Δp can be considerably lower.

4

External dimensions and fittings

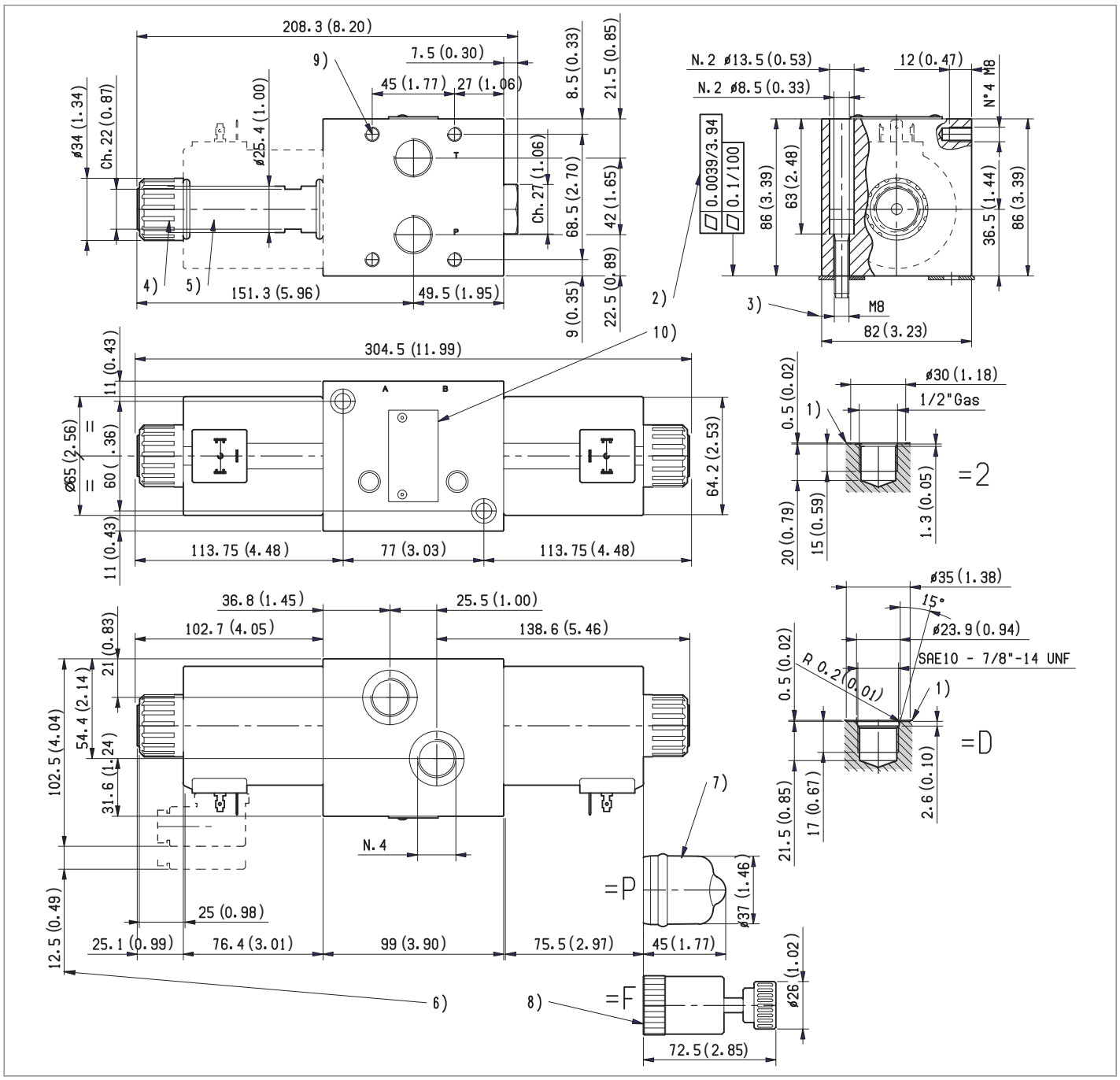

1 Work ports A, B, P, and T.
2 Flatness needed for mounting surface.
3 Two through installation holes reccomended screws M8 DIN 8.8: torque 20-22 Nm (14.7-16.2 ft-lb).
Must be ordered separately.
4 Ring nut for coil locking 34 mm dia.
Torque 7-8 Nm (5.2-5.9 ft-lb).
5 Solenoid tube Ø 25,4 mm (1 inch).
6 Clearance needed for connector removal.
7 Optional push-button manual override for spool opening: it is pressure stuck to the ring nut for coil locking.
Code R933003424.
8 Optional screw type manual override for spool opening: it is screwed (torque 6-7 (4.4-5.2 ft-lb)) to the tube as replacement of the coil ring nut. Code R933003713.
9 Four threaded holes M8 for fitting a secondary flangeable element on port A and B. Screws M8 with recommended strength class DIN 8.8: torque 20-22 Nm (14.7-16.2 ft-lb).
10 Identification label.

Electric connection

00

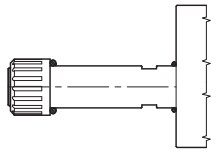

01

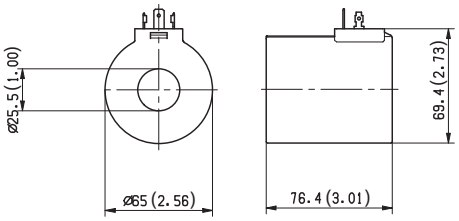

03 Protection class: IP 65 with female connector properly fitted (see drawing).

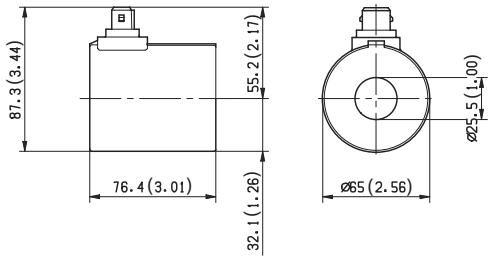

07 Protection class: IP 69 K with female connector properly fitted (see drawing).

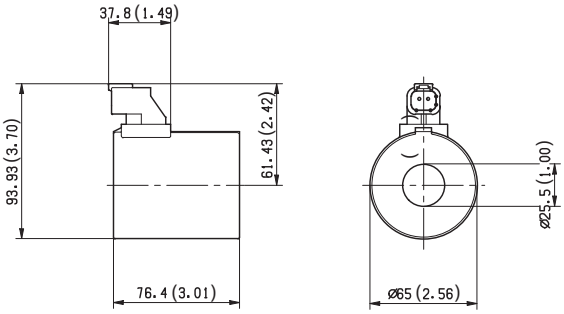

4

Stand alone 4/3, 4/2 solenoid operated directional valve FAN DRIVE

(LF...)

LF1 Size 6
LF2 Size 10
Series 00
LF1 Maximum operating pressure 310 bar (4500 psi)
LF2 Maximum operating pressure 250 bar (3600 psi)
LF1 Maximum flow 60 l/min (15.9 gpm)
LF2 Maximum flow 90 l/min (23.8 gpm)
Ports G 3/8 - G1/2 - SAE 8 - SAE10

General specifications

4 way, 3 position spool type solenoid operated directional valves which control or reverse the direction of the oil flow.
Stand-alone valve body intended for “in-line” application. Available with a choice of threaded ports; mounting surface with installation holes for direct fitting on the machine structure.
Zinc plated high strength cast iron body, with yellow trivalent chrome treatment.
Wet pin tubes for DC coils, with push rod for mechanical override; nickel plated surface.
Coils can be rotated 360° around the tube.
Plug-in connectors available: EN 175301-803 (was DIN 43650); AMP Junior; DT04-2P (Deutsch), free leads.
Coils fastened by ring nut: they are easily removable.
Manual override (push button or lever type) available as option.

Contents

Ordering details	2
Symbols	3
Technical data	3
Characteristic curves	6
External dimensions and fittings	9
Electric connection	11

RE 18308, 04/04.2012, Bosch Rexroth AG

Ordering details

LF1

01	02	03	04	05	06	07	08	09
L	**F**	**1**		**2**				

Family

01	Directional Valve elements CDV	**L**

Type

02	Directional valve 4/3, 4/2	**F**

Size

03	6	**1**

Ports

04	G 3/8	**3**
	3/4" - 16 UNF (SAE8)	**C**

Coil Type

05	C 45	**1**

Spool variants

06	4/3 operated on both sides a and b	**_ 2 _ _**
	4/2 operated on side a only	**_ 3 _ _**

Voltage supply		**07**	**03**	**01**	**00**	
07	Without coil	–	–	–	●	**00**
	12V DC	●	●	●	–	**OB**
	13V DC	●	●	●	–	**AD**
	24V DC	●	●	●	–	**OC**
	27V DC	●	●	●	–	**AC**

Electric connections

08	Without coils	**00**
	With coils, without mating connector DIN EN 175301-803 [1]	**01**
	With coils, with bi-directional diode, without mating connector vertical Amp-Junior	**03**
	With coils, with bi-directional diode, without mating connector DT04-2P	**07**

Options

09	Standard	**00**
	Push-button type manual override	**0P**
	Screw type manual override	**0F**

LF2

01	02	03	04	05	06	07	08	09
L	**F**	**2**						

Family

01	Directional Valve elements CDV	**L**

Type

02	Directional valve 4/3, 4/2	**F**

Size

03	10	**2**

Ports

04	G 1/2 DIN 3852	**2**
	7/8" - 14 UNF (SAE10)	**D**

Coil Type

05	C65DZL coil (24 W)	**0**
	C65DZ coil (44 W)	**1**

Spool variants

06	4/3 operated on both sides a and b	**_ 2 _ _**
	4/2 operated on side a only	**_ 3 _ _**

Voltage supply [2]		**07**	**03**	**01**	**00**	
07	Without coil	–	–	–	●	**00**
	12V DC	●	●	●	–	**OB**
	13V DC	●	–	●	–	**AD**
	24V DC	●	●	●	–	**OC**
	27V DC	●	–	●	–	**AC**

Electric connections [3]

08	Without coils	**00**
	With coils, without mating connector DIN EN 175301-803 [1]	**01**
	With coils, with bi-directional diode, without mating connector vertical Amp-Junior	**03**
	With coils, with bi-directional diode, without mating connector DT04-2P	**07**

Options

09	Standard	**00**
	Push-button type manual override	**0P**
	Screw type manual override	**0F**

● = Available – = Not available

1) For connectors ordering code see data sheet RE 18325-90.
2) C65DZL coil (24 W) is only available as 12-24V DC version.
3) C65DZL coil (24 W) is available with AMP Junior and DEUTSCH DT 04-2P connectors.

Symbols

Spool variants

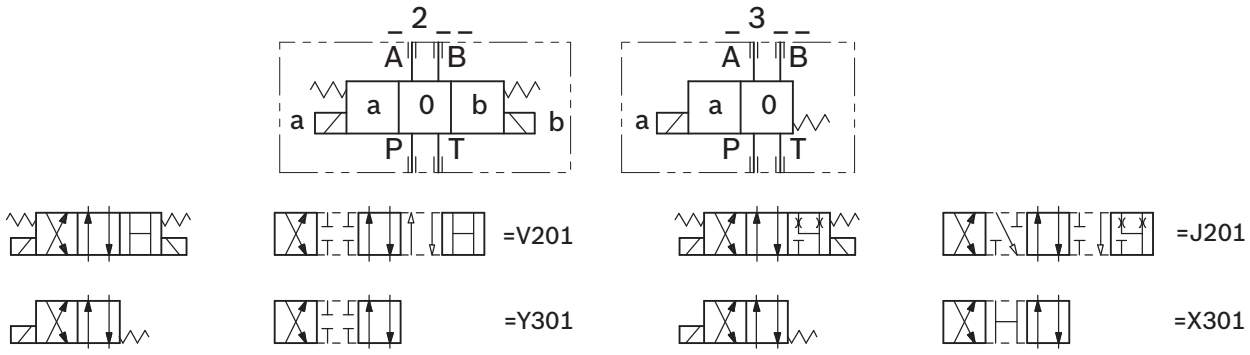

V201 for fixed displacement pumps - **J201** for variable displacement pumps.

Technical data

General		
Valve element LF1 with 2 solenoids	kg (lbs)	2.23 (4.92)
Valve element LF2 with 2 solenoids	kg (lbs)	7.45 (16.42)
Mounting position		Unrestricted
Ambient Temperature	°C (°F)	–20....+50 (-4....+122) (NBR seals)
Hydraulic		
Maximum pressure at P, A and B ports	bar (psi)	250 (3600)
Maximum pressure at T for LF1	bar (psi)	250 (3600)
Maximum pressure at T for LF2	bar (psi)	210 (3045)
Maximum inlet flow for LF1	l/min (gpm)	60 (16)
Maximum inlet flow for LF2	l/min (gpm)	90 (24)
Maximum flow for LF2 with spool J201	l/min (gpm)	80 (21)
Hydraulic fluid General properties: it must have physical lubricating and chemical properties suitable for use in hydraulic systems such as, for example:		Mineral oil based hydraulic fluids HL (DIN 51524 part 1). Mineral oil based hydraulic fluids HLP (DIN 51524 part 2). For use of environmentally acceptable fluids (vegetable or polyglycol base) please consult us.
Fluid Temperature	°C (°F)	–20....+80 (-4....+176) (NBR seals)
Permissible degree of fluid contamination		ISO 4572: $\beta_x \geq 75$ X=12...15 ISO 4406: class 20/18/15 NAS 1638: class 9

Viscosity range	mm^2/s	5....420			
Electrical					
Voltage type		DC			
Voltage tolerance (nominal voltage)	%	-10 .... +10			
Duty		Continuous, with ambient temperature ≤ 50°C (122°F)			
Coil wire temperature not to be exceeded	°C (°F)	150 (302)			
Maximum frequency	Hz	2			
Insulation class		H			
Compliance with		Low Voltage Directive LVD 73/23/EC (2006/95/EC), 2004/108/EC			
Coil for LF1					
Voltage	V	12	13	24	27
Voltage type		DC	DC	DC	DC
Power consumption	W	33	31	33	33
Current (nominal at 20 °C (68 °F))	A	2.8	2.4	1.4	1.2
Resistance (nominal at 20 °C (68 °F))	Ω	4.24	5.42	17	21.8
Coil for LF2 C65 DZL type					
Voltage	V	12	24		
Voltage type		DC	DC		
Power consumption	W	24	24		
Current (nominal at 20 °C (68 °F))	A	2	1		
Resistance (nominal at 20 °C (68 °F))	Ω	5.99	23.71		
Coil for LF2 C65 DZ type					
Voltage	V	12	13	24	27
Voltage type		DC	DC	DC	DC
Power consumption	W	44	44	44	44
Current (nominal at 20 °C (68 °F))	A	3.6	3.4	1.8	1.6
Resistance (nominal at 20 °C (68 °F))	Ω	3.2	3.6	12.8	16.8

Note
For applications with different specifications consult us.

Electrical coil for LF1					
Code	**Voltage [V]**	**Connector type**	**Coil description**	**Marking**	**Coil Mat no.**
OB 01	12 DC	EN 175301-803 (Ex. DIN 43650)	C4501 12DC	12 DC	R933000026
OB 03	12 DC	AMP JUNIOR	C4503 12DC	12 DC	R933000027
OB 07	12 DC	DEUTSCH DT 04-2P	C4507 12DC	12 DC	R933000030
AD 01	13 DC	EN 175301-803 (Ex. DIN 43650)	C4501 13DC	13 DC	R933000028
AD 03	13 DC	AMP JUNIOR	C4503 13DC	13 DC	R933000029
AD 07	13 DC	DEUTSCH DT 04-2P	C4507 13DC	13 DC	R933000031
OC 01	24 DC	EN 175301-803 (Ex. DIN 43650)	C4501 24DC	24 DC	R933000034
OC 03	24 DC	AMP JUNIOR	C4503 24DC	24 DC	R933003630
OC 07	24 DC	DEUTSCH DT 04-2P	C4507 24DC	24 DC	R933000032
AC 01	27 DC	EN 175301-803 (Ex. DIN 43650)	C4501 27DC	27 DC	R933000035
AC 03	27 DC	AMP JUNIOR	C4503 27DC	27 DC	R933000036
AC 07	27 DC	DEUTSCH DT 04-2P	C4507 27DC	27 DC	R933000033

Electrical coil for LF2, C65 DZL (24 W) type					
Code	**Voltage [V]**	**Connector type**	**Coil description**	**Marking**	**Coil Mat no.**
OB 07	12 DC	DEUTSCH DT 04-2P	C6507 12DC	12 DC	R933000108
OC 03	24 DC	AMP JUNIOR	C6503 24DC	24 DC	R933003182
OC 07	24 DC	DEUTSCH DT 04-2P	C6507 24DC	24 DC	R933000109

Electrical coil for LF2, C65 DZ (44 W) type					
Code	**Voltage [V]**	**Connector type**	**Coil description**	**Marking**	**Coil Mat no.**
OB 01	12 DC	EN 175301-803 (Ex. DIN 43650)	C6501 12DC	12 DC	R933000100
OB 03	12 DC	AMP JUNIOR	C6503 12DC	12 DC	R933000119
OB 07	12 DC	DEUTSCH DT 04-2P	C6507 12DC	12 DC	R933000107
AD 01	13 DC	EN 175301-803 (Ex. DIN 43650)	C6501 13DC	13 DC	R933000101
AD 07	13 DC	DEUTSCH DT 04-2P	C6507 13DC	13 DC	R933000112
OC 01	24 DC	EN 175301-803 (Ex. DIN 43650)	C6501 24DC	24 DC	R933000102
OC 03	24 DC	AMP JUNIOR	C6503 24DC	24 DC	R933000120
OC 07	24 DC	DEUTSCH DT 04-2P	C6507 24DC	24 DC	R933000111
AC 01	27 DC	EN 175301-803 (Ex. DIN 43650)	C6501 27DC	27 DC	R933000103
AC 07	27 DC	DEUTSCH DT 04-2P	C6507 27DC	27 DC	R933000113

Characteristic curves

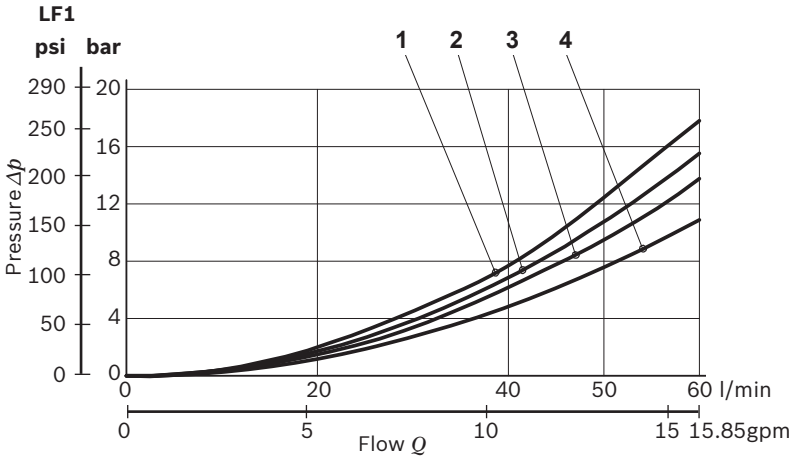

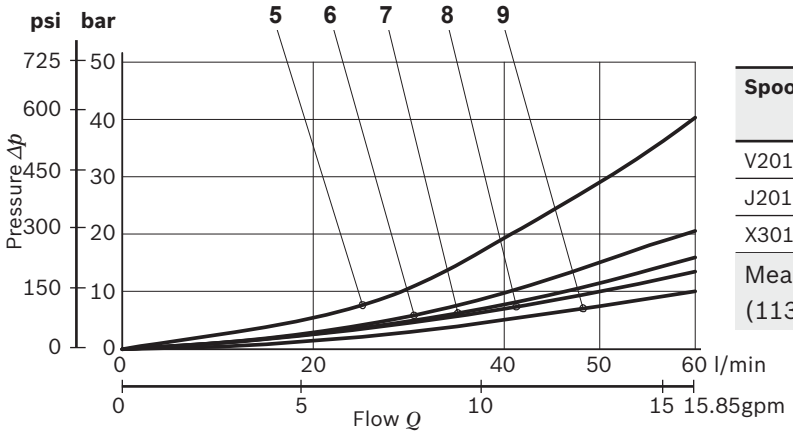

Spool Variant	Curve no.					
	P>T	P>A	P>B	A>T	B>T	A/B>T
V201	4	3	3	1	2	
J201		9	6	7	8	5
X301, Y301		10	10	11	11	

Measured with hydraulic fluid ISO-VG32 at 45° ±5 °C (113° ±9 °F); ambient temperature 20 °C (68 °F).

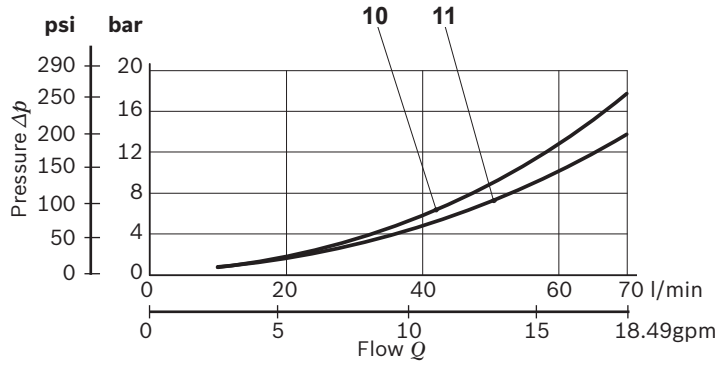

Performance limits

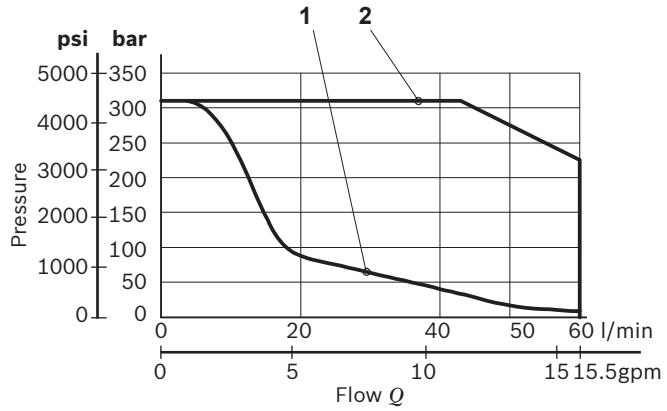

Spool Variant	Curve no.
V201, J201	1
X301, Y301	2

The performance curves are measured with flow going across and coming back, like P>A and B>T. With “lever type” emergency control, the performance limits are slightly lower.

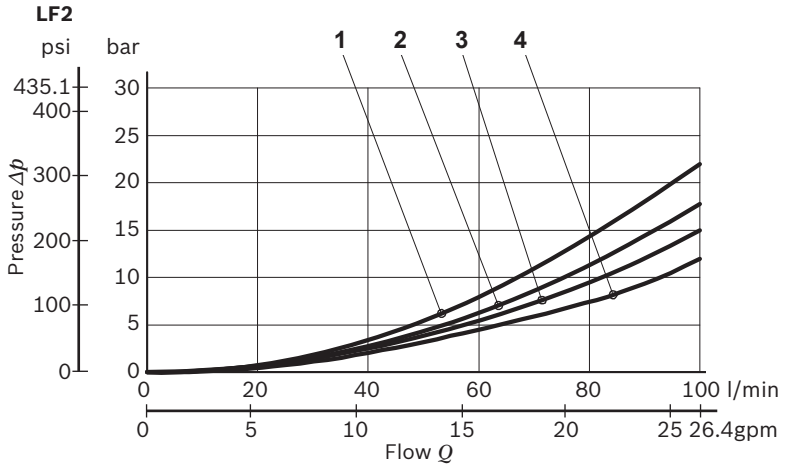

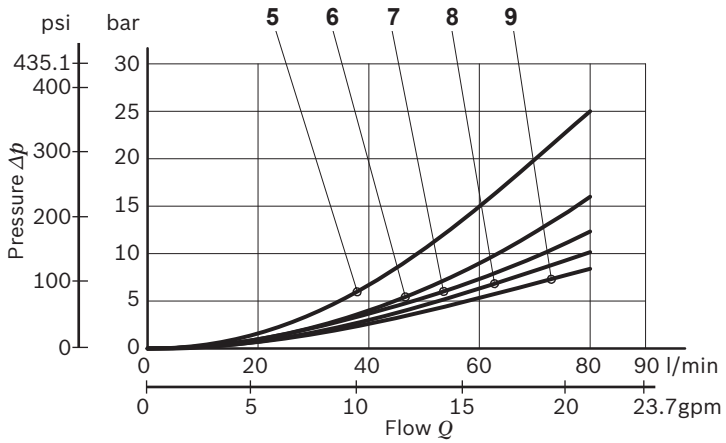

Spool Variant	Curve no.					
	P>T	P>A	P>B	A>T	B>T	A/B>T
V201	3	4	2	1	3	
J201		9	7	6	8	5
X301, Y301		12	11	11	10	

Measured with hydraulic fluid ISO-VG32 at 45° ±5 °C (113° ±9 °F); ambient temperature 20 °C (68 °F).

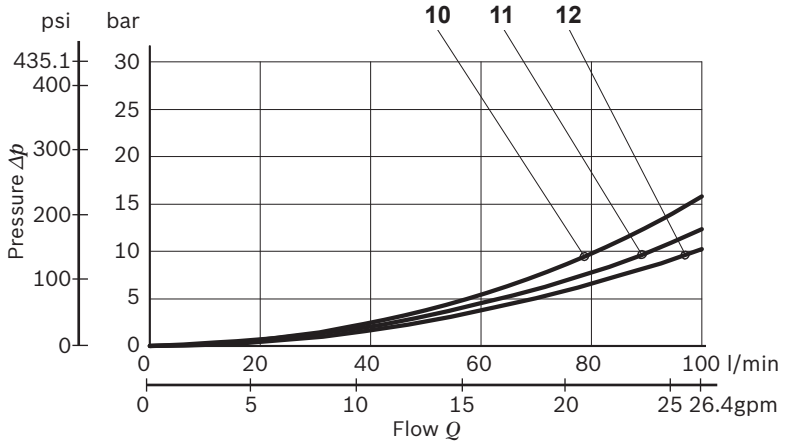

LF2 DZL (24W)

Performance limits

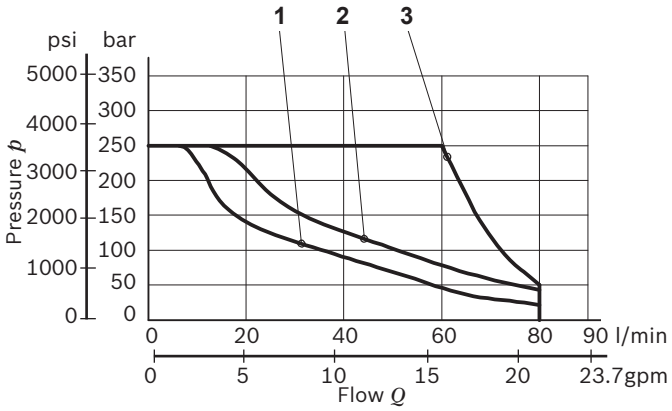

Spool Variant	Curve no.
V201, J201	1
X301	2
Y301	3

The performance curves are measured with flow going across and coming back, like P>A and B>T. With “lever type” emergency control, the performance limits are slightly lower.

LF2 DZ (44W)

Performance limits

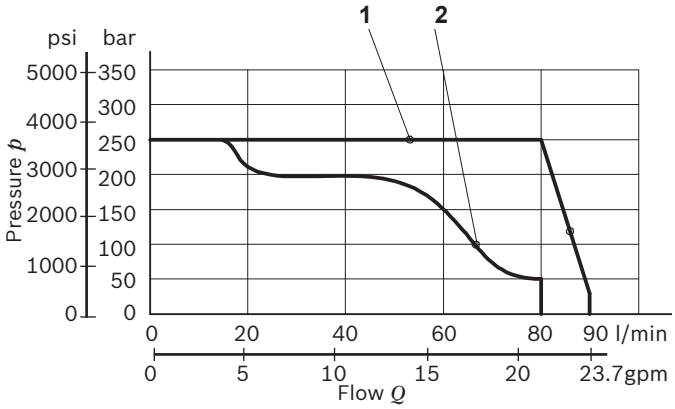

Spool Variant	Curve no.
V201, J201	1
X301, Y301	2

The performance curves are measured with flow going across and coming back, like P>A and B>T. With “lever type” emergency control, the performance limits are slightly lower.

External dimensions and fittings LF1

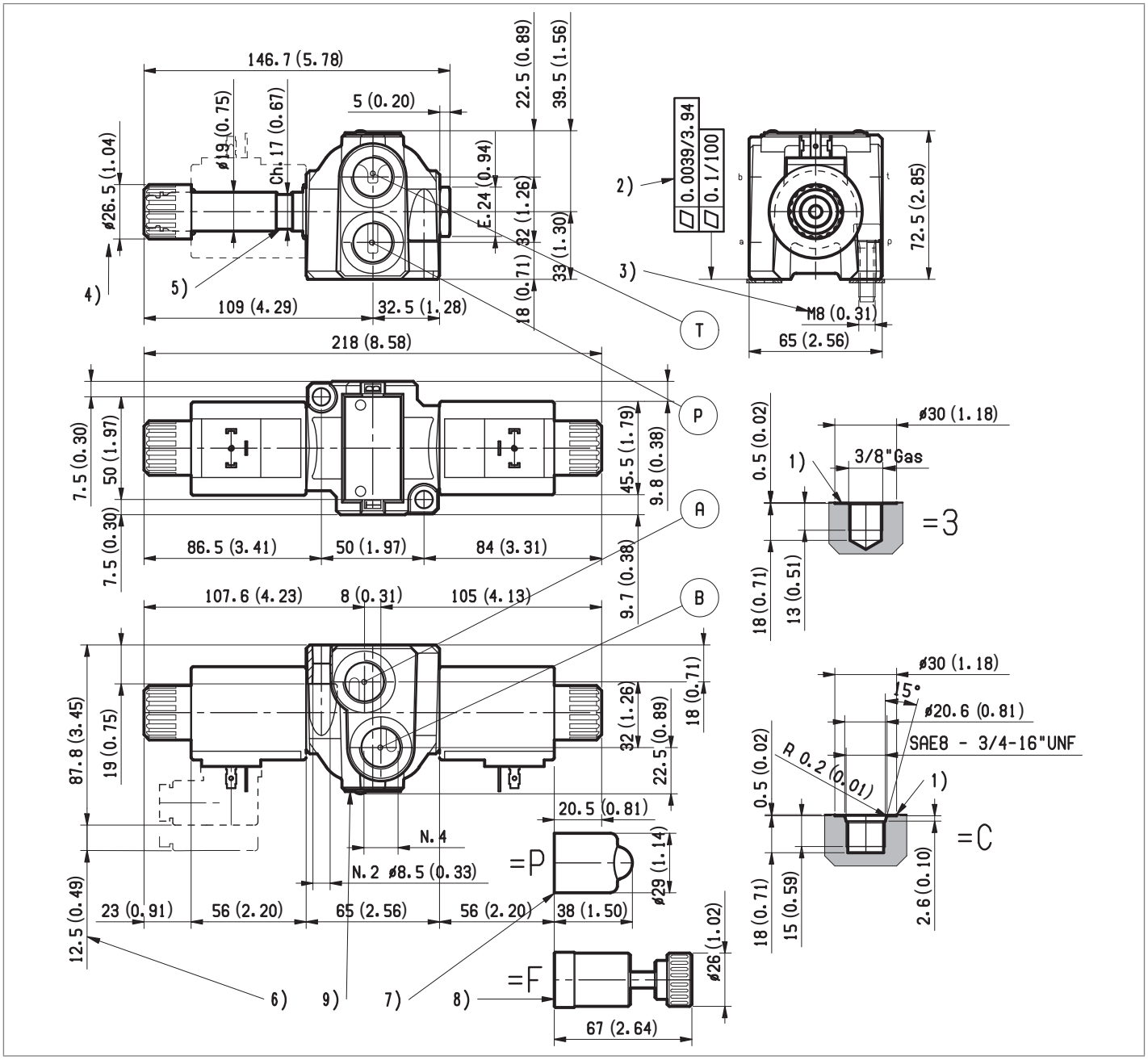

1 Work ports A, B, P, and T.
2 Flatness needed for mounting surface.
3 Two through installation holes reccomended screws M8 DIN 8.8: torque 20-22 Nm (14.7-16.2 ft-lb).
Must be ordered separately.
4 Ring nut for coil locking 26.5mm dia.
Torque 3-4 Nm (2.2-3 ft-lb).
5 Solenoid tube Ø 19 mm (0.75 inch).
6 Clearance needed for connector removal.
7 Optional push-button manual override for spool opening: it is pressure stuck to the ring nut for coil locking.
Mat no. R933000043.
8 Optional screw type manual override for spool opening: it is screwed (torque 6-7 (4.4-5.2 ft-lb)) to the tube as replacement of the coil ring nut. Mat no. R933007215.
9 Identification label.
10 Kit ring nut for coil locking with seals.
Mat no. R933003529.

External dimensions and fittings LF2

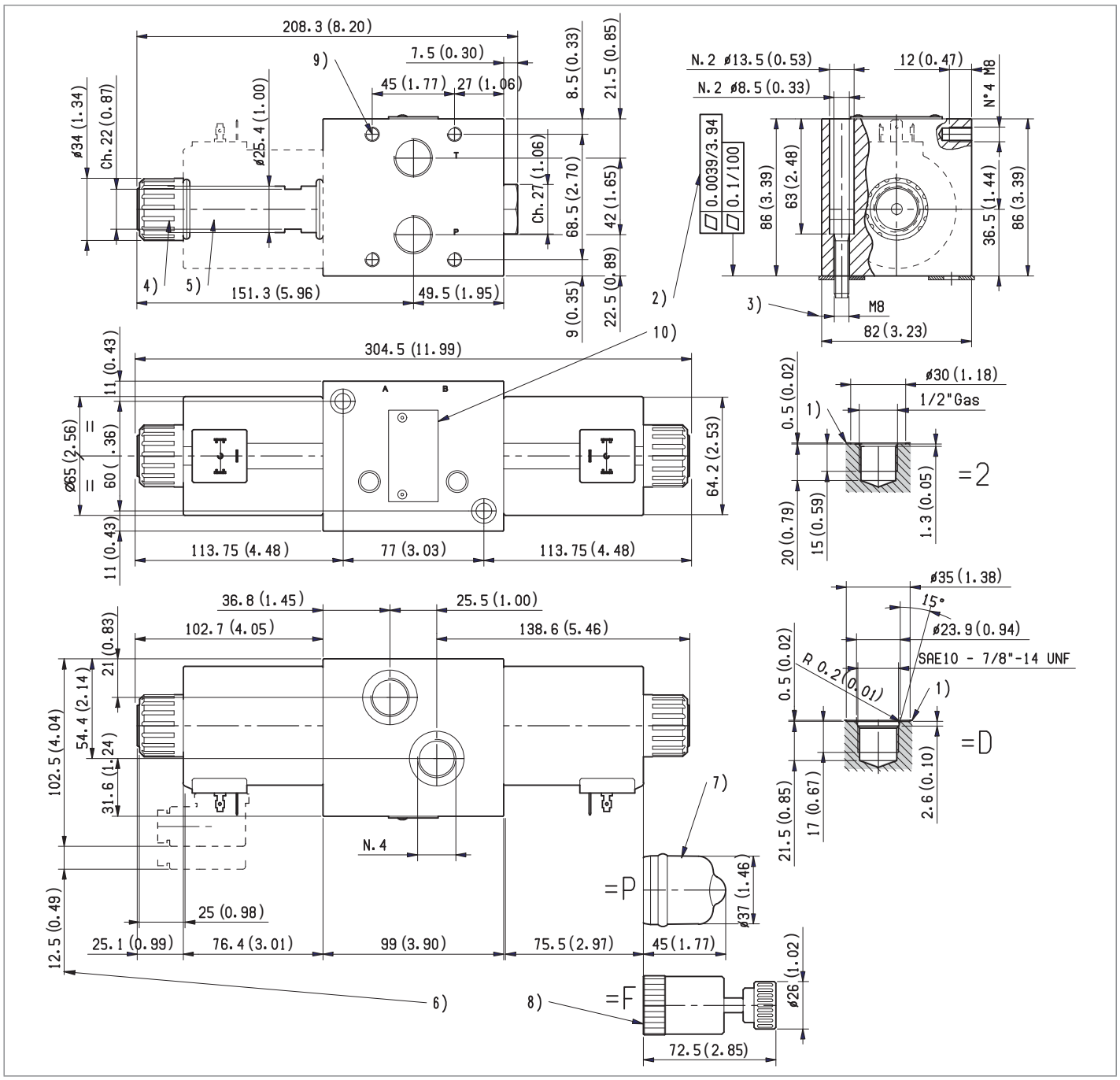

1 Work ports A, B, P, and T.
2 Flatness needed for mounting surface.
3 Two through installation holes reccomended screws M8 DIN 8.8: torque 20-22 Nm (14.7-16.2 ft-lb).
Must be ordered separately.
4 Ring nut for coil locking 34 mm dia.
Torque 7-8 Nm (5.2-5.9 ft-lb).
5 Solenoid tube Ø 25.4 mm (1 inch).
6 Clearance needed for connector removal.
7 Optional push-button manual override for spool opening: it is pressure stuck to the ring nut for coil locking.
Mat no. R933003424.
8 Optional screw type manual override for spool opening: it is screwed (torque 6-7 (4.4-5.2 ft-lb)) to the tube as replacement of the coil ring nut.
Torque 6-7 Nm (4.4-5.2 ft-lb). Mat no. R933003713.
9 Four threaded holes M8 for fitting a secondary flangeable element on port A and B. Screws M8 with recommended strength class DIN 8.8: torque 20-22 Nm (14.7-16.2 ft-lb).
10 Identification label.
11 Kit ring nut for coil locking with seals.
Mat no. R933002879.

Electric connection

LF1

00

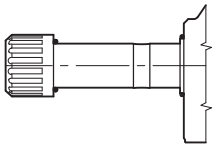

01

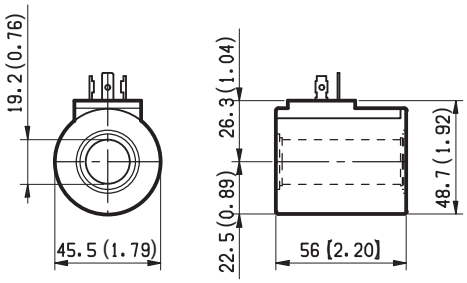

03 Protection class: IP 65 with female connector properly fitted (see drawing).

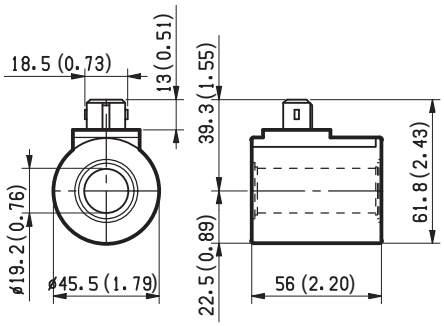

07 Protection class: IP 69 K with female connector properly fitted (see drawing).

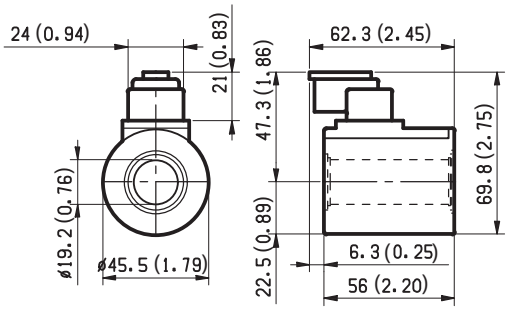

LF2

00

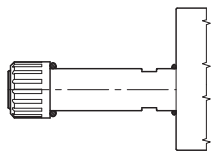

01

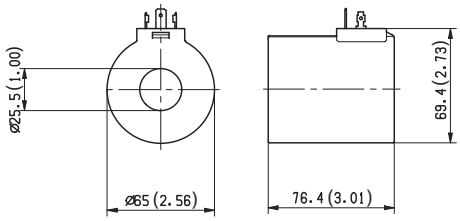

03 Protection class: IP 65 with female connector properly fitted (see drawing).

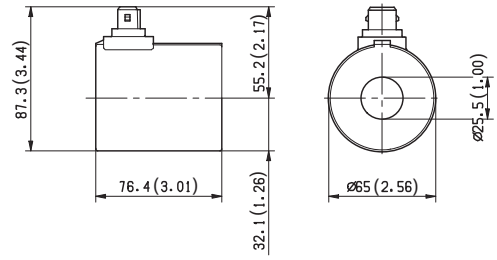

07 Protection class: IP 69 K with female connector properly fitted (see drawing).

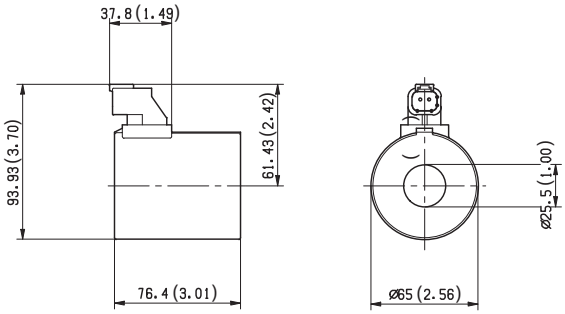

4

Steering mode selection valve with electromechanical detent LF1_1STR3... (SMV2.0)

PATENT PENDING

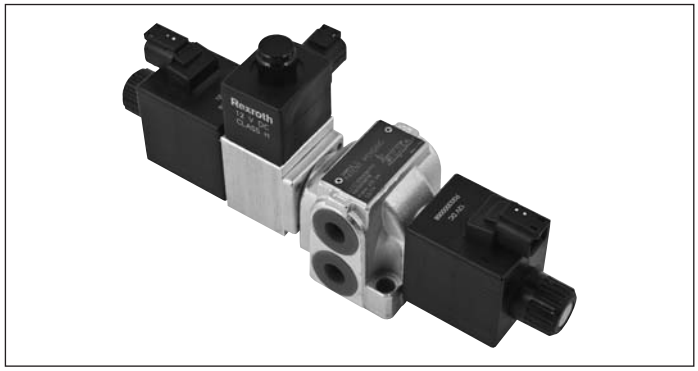

Size 6
Series 00
Maximum operating pressure 210 bar (3046 psi)
Maximum peak pressure 230 bar (3336 psi)
Maximum flow 50 l/min (13.2 gpm)
Ports G 3/8 - G1/2 - SAE 8

General specifications

4/3 direct operated solenoid controlled directional valve with an electromagnetic mechanical detent on the control spool, specifically designed for steering mode selection.
Zero power consumption during two wheel steering mode.
Control spool with positive overlapping to reduce leakage and switching shocks.
Stand-alone zinc plated valve housing with threaded ports and fixing holes for direct line mounting.
Wet pin solenoid tubes for DC coils, with inherent push rod for mechanical override on the control spool; zinc plated.
Standard coil connections available in DIN and DEUTSCH (additional connections on request).

Contents

Ordering details	2
Functional description	3
Operation logical sequence	4
Technical data	5
Characteristic curves	7
External dimensions and fittings	8
Electric connection	9

Ordering details

01	02	03	04	05	06	07	08	09
L	**F**	**1**	**_**	**_**	**STR3**	**_ _**	**_ _**	**_ _**

Family

01	Directional Valve	**L**

Type

02	Directional valve 4/3	**F**

Size

03	6	**1**

Ports

04	G 3/8	**3**
	G 1/2	**2**
	3/4” - 16 UNF (SAE8)	**C**
	Special	**_**

Coil Type

05	C48 coil	**1**
	Specials	**_**

Spool variants

06	4/3 operated on both sides a and b	**STR3**

Voltage supply[1]		**07**	**02**	**01**	**00**	
07	Without coil	–	–	–	●	**00**
	12V DC	●	●	●	–	**OB**
	13V DC[2]	●	●	●	–	**AD**
	24V DC	●	●	●	–	**OC**
	27V DC[3]	●	●	●	–	**AC**

Electric connections

08	Without coil	**00**
	With coil, without mating connector DIN EN 175301-803	**01**
	With coils and with non-assembled connectors, type EN 175301-803	**02**
	With coils, with bi-directional diode, without mating connector DT04-2P	**07**
	Specials	**_ _**

Optional fittings

09	Standard	**00**
	Special	**_ _**

● = Available – = Not available

1) Choosing the nominal voltage of the coils "a" and "b" the nominal voltage of the coil "c" is automatically defined. For customization contact factory.
2) For "a" and "b" coils 13VDC coil "c"= 14VDC (see data sheet RE18325-90).
3) For "a" and "b" coils 27VDC coil "c"= 26VDC (see data sheet RE18325-90)

Functional description

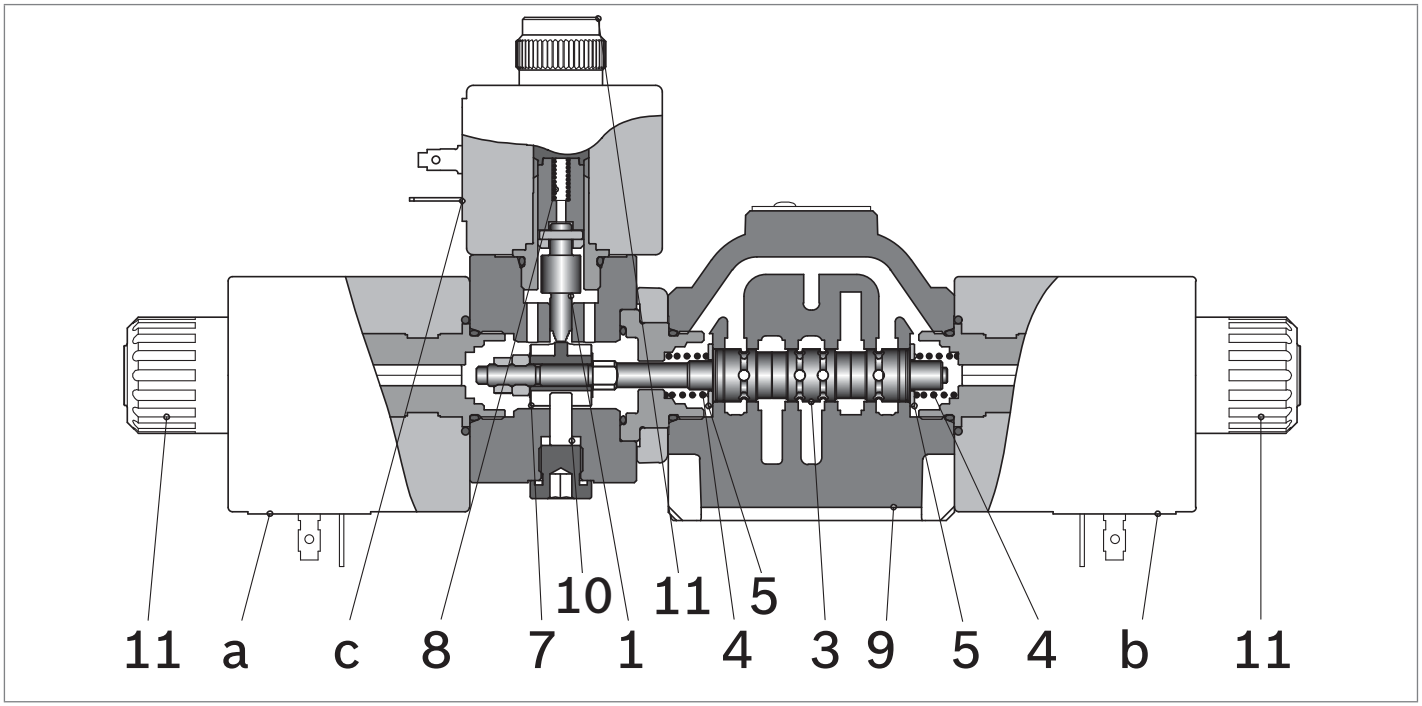

The SMV2.0 directional control valves with electromagnetically actuated mechanical detent are used for selecting between three steering modes.
In the de-energized condition, the control spool (**3**) is held in the center position by return springs (**4**); the spring (**8**) pushes the detent pin(**1**) against the bushing (**7**). In this condition the valve is in the front steering configuration (2WS) as all of the coils are de-energized.
In order to switch the steering mode (see pictures below), it is necessary to first actuate the mechanical detent by energizing the coil "**c**" in order to allow the control spool to move.
Then, by energizing one of the coils "**a**" or "**b**", the control spool switches from the center position (2WS) to a different steering mode, 4WS-A or 4WS-B.
When a 4WS mode is selected, the control spool coil, "**a**" or "**b**", must continue to be energized during machine operation; it is also necessary to de-energize the coil "**c**" to lock the mechanical detent into position. The mechanical interference between the bushing (7) and the detent pin(**1**) locks the control spool and prevents unwanted movements generated from external agents. (i.e. short circuit on the coils "**a**" or "**b**").
The return springs guarantee the return to the center position by pushing on the washer (**5**) that is against the control spool.

Spool variants

STR 3

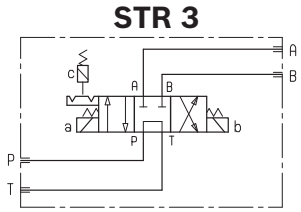

All wheel steering 4WS-A

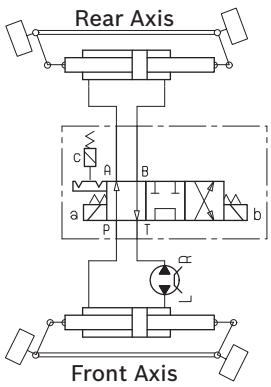

Front steering 2WS

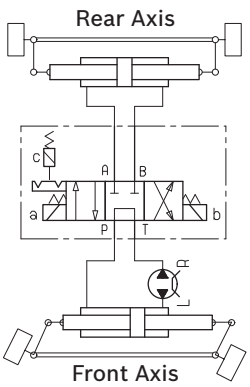

Crab steering 4WS-B

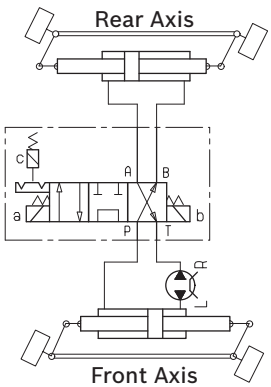

Logical sequence of Operation

The following shows the logical sequence of operation that guarantees the valve operates correctly.

Steering mode selection from 2WS to 4WS-A (locked)					
Time	**Coil A**	**Coil B**	**Coil C**	**Steering mode**	**note:**
Initial status 2WS	OFF	OFF	OFF	2WS	Current steering mode selection
t=0	OFF	OFF	ON	2WS	Coil C is energized to disengage mechanical detent.
t=50ms	ON	OFF	ON	transient 2WS -> 4WS-A	After 50ms, coil A can be energized (the reaction time of coil C).
t=150ms	ON	OFF	OFF	4WS-A (unlocked)	After 100ms, coil C can be de-energized (the reaction time of coil A).
t=200ms	ON	OFF	OFF	4WS-A (locked)	After 50ms the control spool is locked in position (the reaction time of the return spring of coil C).
To go from 2WS to 4WS-B, repeat operation above substituting A with B coil and B with A.					

Steering mode selection from 4WS-A (locked) to 2WS					
Time	**Coil A**	**Coil B**	**Coil C**	**Steering mode**	**note:**
Initial status 4WS-A (locked)	ON	OFF	OFF	4WS-A (locked)	Current steering mode selection
t=0	ON	OFF	ON	4WS-A (unlocked)	Coil C is energized to disengage mechanical detent.
t=50ms	OFF	OFF	ON	transient 4WS-A -> 2WS	After 50ms, coil A can be de-energized (the reaction time of coil C).
t=200ms	OFF	OFF	OFF	2WS	After 150ms, coil C can be de-energized (the reaction time of the return spring of coil A).
To go from 4WS-B (locked) to 2WS, repeat operation above substituting A with B coil and B with A.					

Steering mode selection from 4WS-A (locked) to 4WS-B (locked)					
Time	**Coil A**	**Coil B**	**Coil C**	**Steering mode**	**note:**
Initial status 4WS-A (locked)	ON	OFF	OFF	4WS-A (locked)	Current steering mode selection
t=0	ON	ON	ON	4WS-A (unlocked)	Selection of 4WS-B steering mode, and disengagement of the mechanical detent (both coil B and C are simultaneously energized).
t=50ms	OFF	ON	ON	transient 4WS-A -> 4WS-B	After 50ms coil A can be de-energised (coil B and centering spring shift the spool to the opposide side)
t=250ms	OFF	ON	OFF	4WS-B	After 200ms, coil C can be de-energized, initiating engagement of the detent.
t=300ms	OFF	ON	OFF	4WS-B	After 50ms, the control spool is locked in position (the reaction time of the return spring of coil C).
To go from 4WS-B (locked) to 4WS-A (locked), repeat operation above substituting A with B coil and B with A.					

2WS: two wheel steering.
4WS-A: four wheel steering (turn).
4WS-B: four wheel steering (crab).

The switching times in the table above are measured on test benches at defined hydraulic conditions (ISO6403). The operating conditions can significantly affect switching times. For this reason it is suggested to increase them as necessary.

Technical data

General					
Valve element	kg (lbs)	2.23 (4.92)			
Mounting position		Unrestricted			
Ambient Temperature	°C (°F)	–20....+50 (-4....+122) (NBR seals)			
Hydraulic					
Maximum pressure at P, A and B ports	bar (psi)	230 (3336)			
Maximum peak pressure at P, A, B	bar (psi)	250 (3625)			
Maximum pressure at T	bar (psi)	210 (3046)			
Maximum peak pressure at T	bar (psi)	230 (3336)			
Maximum inlet flow	l/min (gpm)	50 (13.2)			
Hydraulic fluid General properties: it must have physical lubricating and chemical properties suitable for use in hydraulic systems such as, for example:		Mineral oil based hydraulic fluids HL (DIN 51524 part 1). Mineral oil based hydraulic fluids HLP (DIN 51524 part 2). For use of environmentally acceptable fluids (vegetable or polyglycol base) please consult us.			
Fluid Temperature	°C (°F)	–20....+80 (-4....+176) (NBR seals)			
Permissible degree of fluid contamination		ISO 4572: $\beta_x \geq 75$ X=12...15 ISO 4406: class 20/18/15 NAS 1638: class 9			
Viscosity range	mm^2/s	5....420			
$MTTF_d$		150 years			
Electrical					
Voltage type		DC			
Voltage tolerance (nominal voltage)	%	-10 .... +10			
Duty		Continuous, with ambient temperature ≤ 50°C (122°F)			
Coil wire temperature not to be exceeded	°C (°F)	150 (302)			
Response time	ms	See page before			
Insulation class		H			
Compliance with		Low Voltage Directive LVD 73/23/EC (2006/95/EC), 2004/108/EC			
Voltage	V	12	13	24	27
Voltage type		DC	DC	DC	DC
Power consumption	W	36	36	36	36
Current (nominal at 20 °C (68 °F))	A	3.0	2.77	1.53	1.32
Resistance (nominal at 20 °C (68 °F))	Ω	3.97	4.68	15.67	20.42

1) Nominal
2) ± 7% at temperature 20°C (68°F)

Note
For applications with different specifications consult us.

Code	Voltage [V]	Connector type	Coil description	Marking	Coil Mat no.
OB 01	12 DC	EN 175301-803 (Ex. DIN 43650)	C4801 12DC	12 DC	R933000063
OB 07	12 DC	DEUTSCH DT 04-2P	C4807 12DC	12 DC	R933000068
AD 01	13 DC	EN 175301-803 (Ex. DIN 43650)	C4801 13DC	13 DC	R933000069
AD 07	13 DC	DEUTSCH DT 04-2P	C4807 13DC	13 DC	R933000073
OC 01	24 DC	EN 175301-803 (Ex. DIN 43650)	C4801 24DC	24 DC	R933000076
OC 07	24 DC	DEUTSCH DT 04-2P	C4807 24DC	24 DC	R933000075
AC 01	27 DC	EN 175301-803 (Ex. DIN 43650)	C4801 27DC	27 DC	R933000077
AC 07	27 DC	DEUTSCH DT 04-2P	C4807 27DC	27 DC	R933000074

For further information on the coil "c", see data sheet RE18325-90 (coils S8-356 - CLASS H 20W). Coils with connector type DEUTSCH DT04-2P include, as standard, a bidirectional diode.

Below is a list of the standard coil "c" model codes:

Type	Material Number
OD02170130OB00	R901090821
OD02170130OG00	R901144215
OD02170130OC00	R901083065
OD02170130AC00	R901058832
OD02172230OB00	R901130433
OD02172230OG00	R934003033
OD02172230OC00	R901130401
OD02172230AC00	R934000426

Characteristic curves

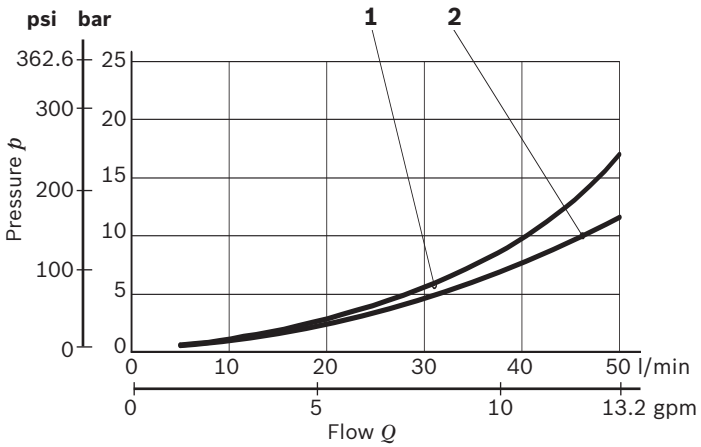

Curve Nr.				
P>T	P>A	P>B	A>T	B>T
1	2	2	2	2

The graph is valid with either coil "a" or "b" energized. Measured with hydraulic fluid ISO-VG32 at 45° ±5 °C (113° ±9 °F); ambient temperature 20 °C (68 °F).

Performance limits

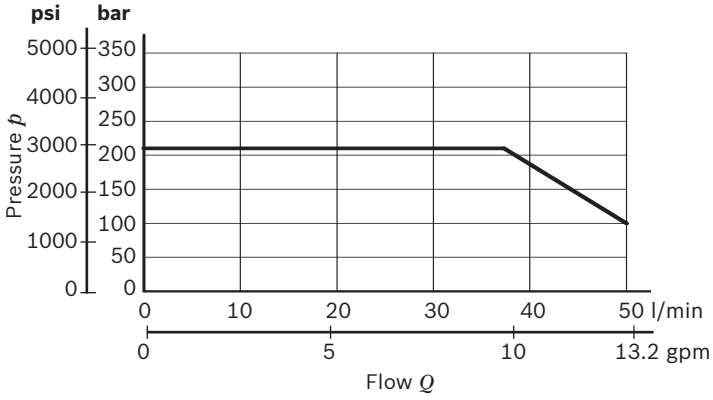

The performance limits are the same for both P > A or B, and T > A or B.

4

External dimensions and fittings

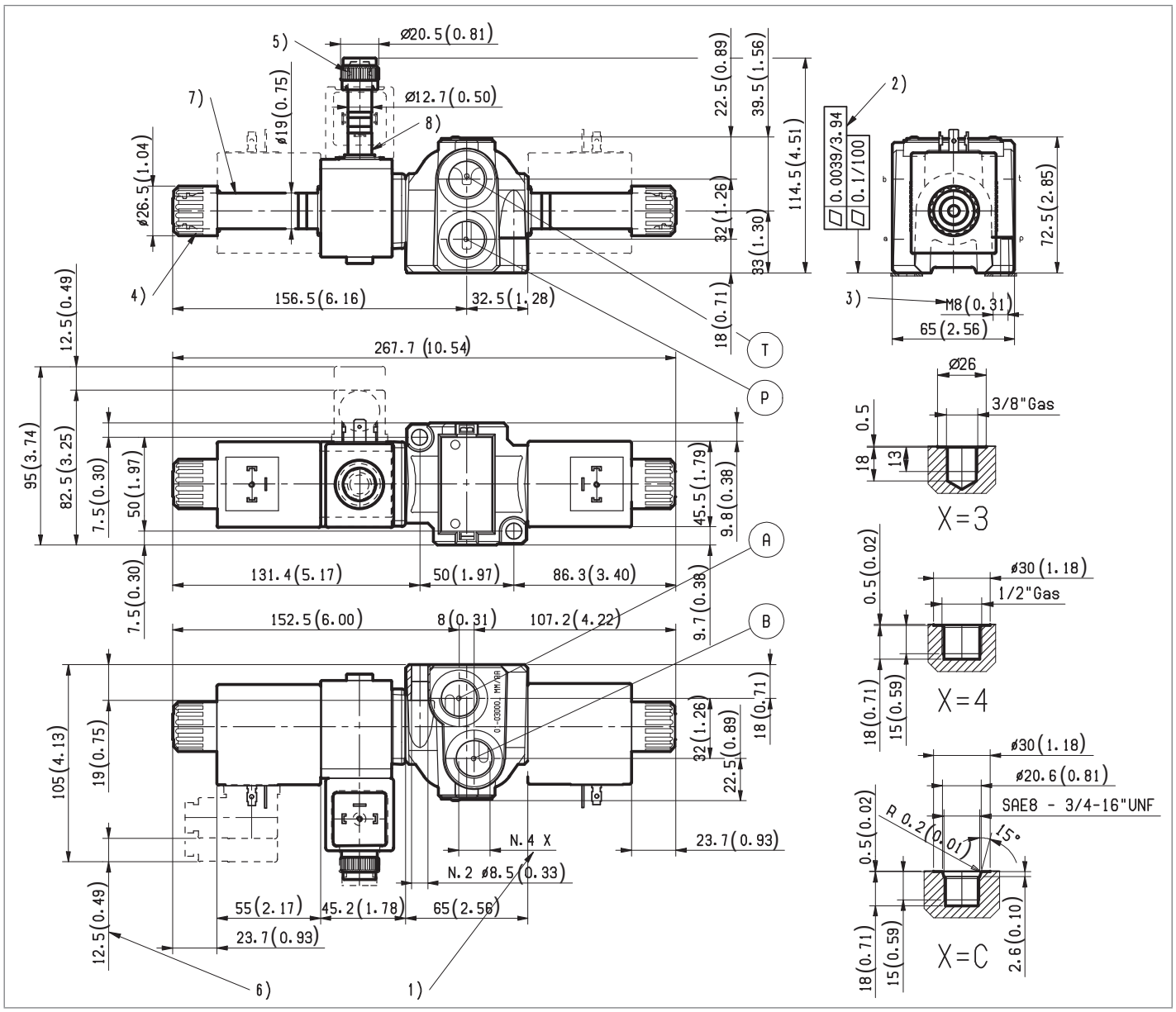

1 Ports P,T,A and B
2 Requested planarity of the fixing plane
3 N°2 fixing screws M8x30 DIN 912 class 8.8
torque 20-22Nm (14.7-16.2 ft-lb)
4 Coil nut for "a" and "b" coil (ø26.5mm)
torque 5-6Nm (3.7-4.2 ft-lb)
5 Coil nut for "c" coil (ø20.5) torque 3-4Nm (2.2-2.9 ft-lb)
6 Clearance needed for connector removal
7 Control spool solenoid tube ø19mm (0.75 inch)
torque 22-24Nm (16.2-17.7 ft-lb)
8 Detent solenoid tube ø12.7mm (0.5 inch)
torque 22-24Nm (16.2-17.7 ft-lb)

Electric connection

00 Without coils suggested for a flexible warehouse management.

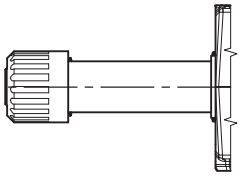

01 With coils having plug-in pins DIN 43650 – ISO 4400, without connectors.
Protection class: IP 67 when connector with seal is properly screwed down.

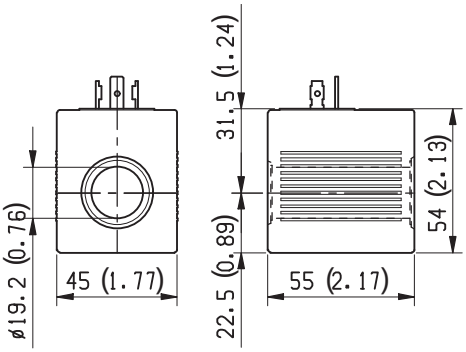

02 With coils and with connectors non-assembled, type EN 175301-803.
Protection class: IP 65 when connector with seal is properly screwed down.

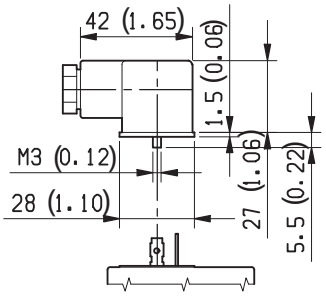

Mat. No.	Description
R933002885	182-09 GRAY
R933002889	182-09 BLACK

07 With coils having DEUTSCH DT 04-2P connector.
Protection class: IP 69 K with female connector properly fitted (see drawing).

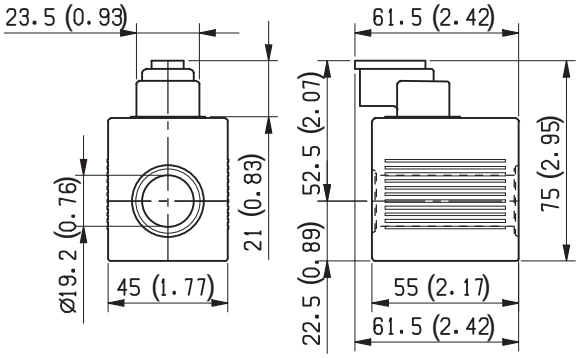

4

RF 18306 10/05 2016 Bosch Rexroth AG

935

Solenoid valves Cetop 2

Designation	Description	Ports/Size	Code	Data sheet	Page
4/3, 4/2 directional valves solenoid operated	LC04Z	CETOP 2 - P02 / Size 4	L5010_	18303-01	939
4/3, 4/2 directional valves lever operated	LC04-LV	CETOP 2 - P02 / Size 4	L50L0_	18303-02	949
4/3, 4/2 proportional directional valves solenoid operated	LC04P	CETOP 2 - P02 / Size 4	L5080_	18303-03	957
2 or 3 way pressure compensated flow regulators	LC04M-CB	CETOP 2 - P02 / Size 4	L6090_ L6095_	18303-04	965
Modular direct and pilot operated check valves	LC04M-VR	Size 4	L6040_	18305-07	973

4/3 - 4/2 Directional valves solenoid operated

L5010... (LC04Z)

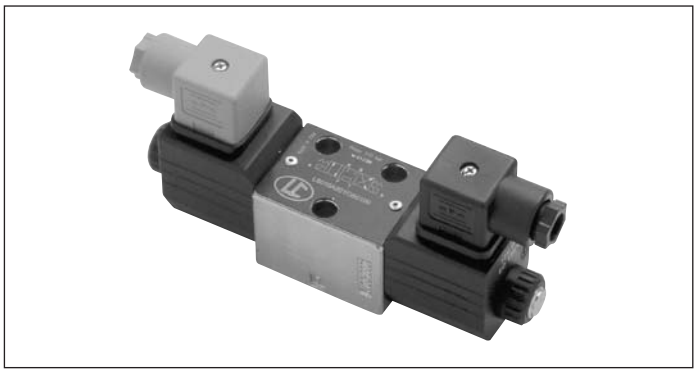

Size 4
Series 00
Maximum operating pressure 310 bar (4500 psi)
Maximum flow 25 l/min (6.6 gpm)

General specifications

Direct solenoid operated spool valve, standard version.
Spool switching is by on off solenoids with a central tube and removable coil.
Spring centered control spool.
For mounting on industry standard surface port pattern to CETOP RP121 H-4.2-P02.
Wet pin DC solenoids with removable coil and manual override.
Manual override as option (push or screw-in type).
Coil can be rotated through 360°.
Available electrical connections: EN 175301-803 (Ex. DIN 43650); AMP JUNIOR; DT04-2P (Deutsch); Free leads.

Contents

Ordering details	2
Functional description	4
Technical data	5
Characteristic curves	7
External dimensions and fittings	8
Electric connection	9

RF 15305/01/02 2016, Bosch Rexroth AG

Ordering details

01	02	03	04	05	06	07	08
L	**5**	**0**	**10**				

Family

01	Directional Valves	**L**

Type

02	CETOP Valves	**5**

Size

03	NG 4 (P02)	**0**

Operation

04	Solenoid operated C36 coil	**10**

Spool variants

05	4/3 operated A and B side	**_ 2 _ _**
	4/2 operated A and B side	**_ 2 _ _**
	4/2 operated A side	**_ 3 _ _**
	4/2 operated B side	**_ 4 _ _**
	4/2 operated A and B side with detent	**_ 5 _ _**

Voltage supply		**31**	**07**	**03**	**01**	**00**	
06	Without coil	–	–	–	–	●	**00**
	12V DC	●	●	●	●	–	**OB**
	13V DC	–	●	–	●	–	**AD**
	24V DC	●	●	●	●	–	**OC**
	27V DC	–	●	–	●	–	**AC**
	48V DC	–	–	–	●	–	**OD**
	110V DC	–	–	–	●	–	**OE**
	24V AC (21.5 DC)	–	–	–	●	–	**OV**
	110V AC (98 DC)	–	–	–	●	–	**OW**
	230V AC (207 DC)	–	–	–	●	–	**OZ**

Electric connections

07	Without coils	**00**
	With coils, without mating connector DIN EN 175301-803	**01** [1]
	With coils, with bi-directional diode, without mating connector vertical Amp-Junior	**03**
	With coils, with bi-directional diode, without mating connector DT04-2P	**07**
	With coils and bipolar sheathed lead 350mm (13,8 in) long	**31**

Options

08	Standard	**00**
	External push button manual override	**EP**
	Screw-in type manual override	**EF**

● = Available – = Not available

1) For connectors ordering code see data sheet RE 18325-90.

Spool variants

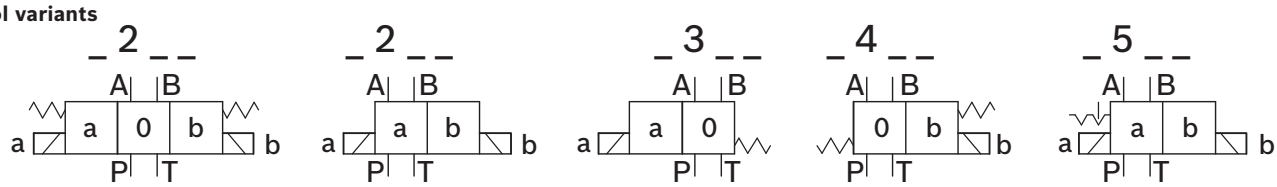

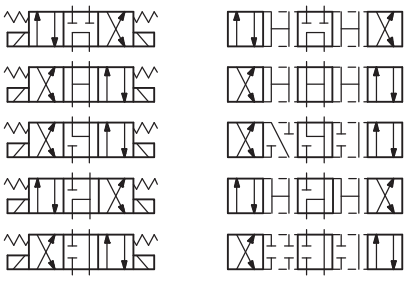
=A201
=C201
=E201
=G209
=K209

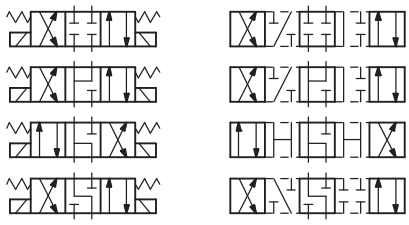
=B201
=D201
=G201
=K201

=L201
=N201

=M201

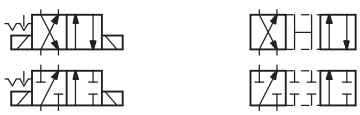
=L501
=N501

=M501

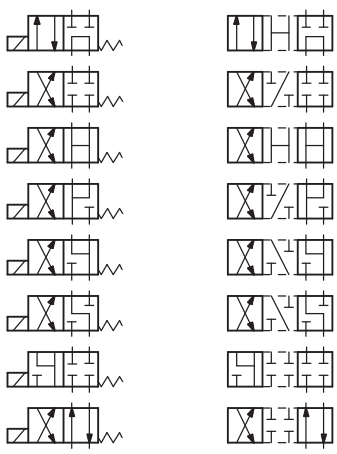
=A301
=B301
=C301
=D301
=E301
=K301
=T301
=Y301

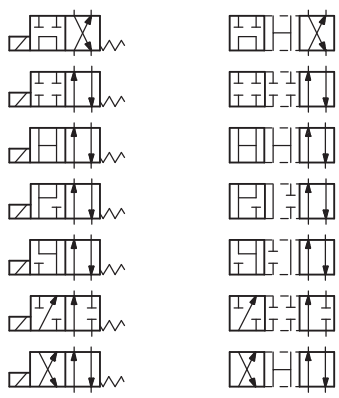
=A361
=B361
=C361
=D361
=E361
=N301
=X301

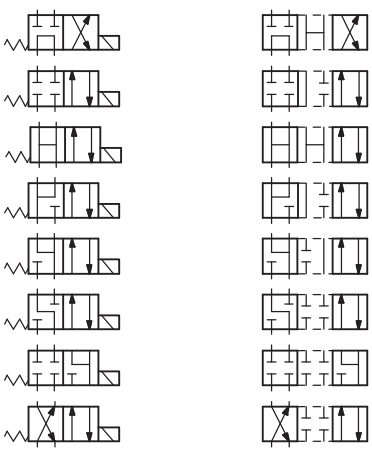
=A401
=B401
=C401
=D401
=E401
=K401
=T409
=Y401

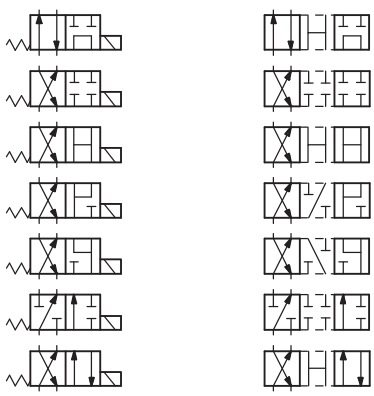
=A471
=B471
=C471
=D471
=E471
=N401
=X401

Functional description

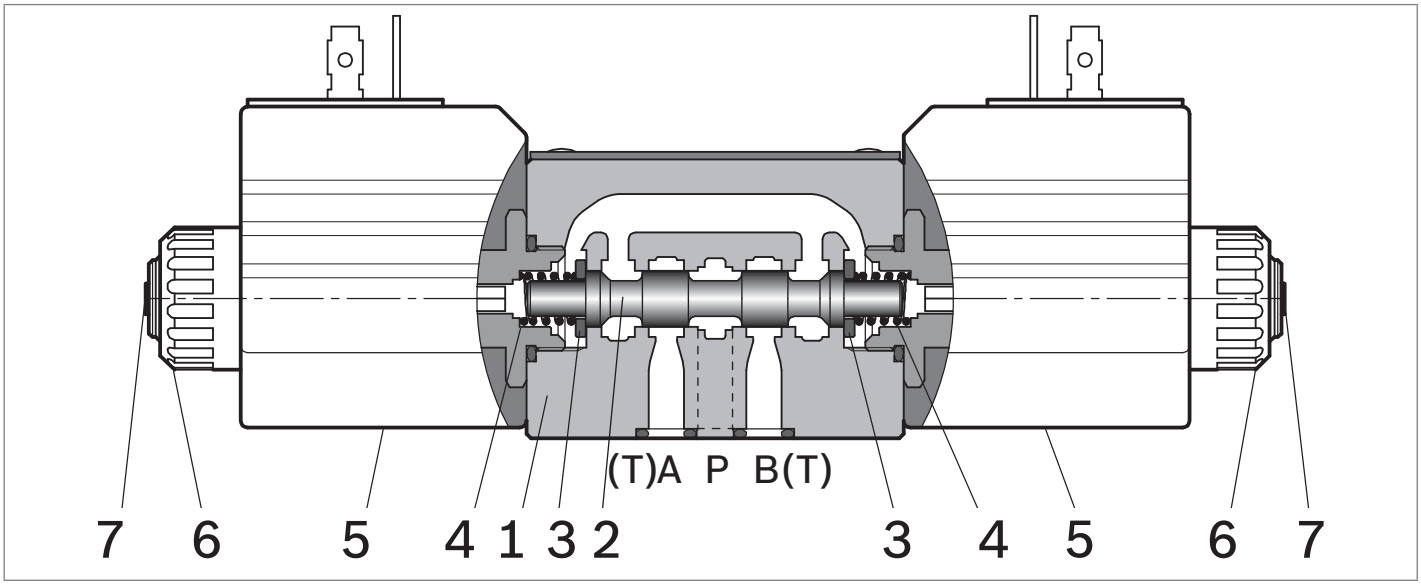

Type L5010
The solenoid operated valves type L 5010 provide 3-way or 4-way flow control, usually from port **P** to either port **A** or **B**, and the consequent flow return to T from **B** or **A** respectively.
The valves are composed by a central cast iron body (**1**) which mounts on industry standard surfaces where the flow ports and the installation holes are located; the central body houses the precisely machined directional control spool (**2**) which is held in the neutral or initial position by the return springs (**4**). One or two solenoids, composed by a central tube and a surrounding coil (**5**), are fitted to the body at the spool's ends: when the coils are energized, their magnetic field develops a force on the oil immersed mobile plunger incorporated in the tube which pushes the control spool from the initial position into a shifted position where oil flow is allowed from **P** to either **A** or **B**.
With coils (**5**) de-energized, the control spool (**2**) returns to the central or initial position pushed by the washers (**3**) supported by the return springs (**4**).
The coils (**5**) are locked on the tube by threaded plastic nuts (**6**); the tube incorporates an externally reachable push rod (**7**) which can pushed for emergency spool shifting in case of electric failure.

Type L5010L201_, L5010M201_, L5010N201_
These valves do not have return springs (**4**) for the directional control spool (**2**): the spool can shift between two positions, driven only by the magnetic force developed by the two solenoids (**5**), and, when the solenoids are not energized, the neutral position of the spool is not defined. The directional control spool holds a specific position only when one of the solenoids is maintained energized.

Type L5010L501_, L5010M501_, L5010N501_
In these valves the directional control spool has two switched positions, each one with a mechanical detent. Shifting of the spool's position is achieved by energizing one of the solenoids, but it is unnecessary to maintain the coil energized in order to keep the spool shifted.

Technical data

General									
Valve element with 2 solenoids	kg (lbs)	1.08 (2.2)							
Valve element with 1 solenoid	kg (lbs)	0.82 (1.7)							
Valve installation positions		Unrestricted							
Ambient Temperature	°C (°F)	–20....+50 (-4....+122) (NBR seals)							
Hydraulic									
Maximum pressure at P, A and B ports	bar (psi)	310 (4500)							
Maximum pressure at T	bar (psi)	250 (3625)							
Maximum flow	l/min (gpm)	25 (6.6)							
Maximum flow when using spool type A201, A301, A401, A361, A471, G201, G209	l/min (gpm)	18 (4.7)							
Hydraulic fluid General properties: it must have physical lubricating and chemical properties suitable for use in hydraulic systems such as, for example:		Mineral oil based hydraulic fluids HL (DIN 51524 part 1). Mineral oil based hydraulic fluids HLP (DIN 51524 part 2). For use of environmentally acceptable fluids (vegetable or polyglycol base) please consult us.							
Fluid Temperature	°C (°F)	–20....+80 (-4....+176) (NBR seals)							
Permissible degree of fluid contamination		ISO 4572: $\beta_x \geq 75$ X=12...15 ISO 4406: class 20/18/15 NAS 1638: class 9							
Viscosity range	mm^2/s	5....420							
Electrical									
Voltage type		DC (AC only with RAC connection)							
Voltage tolerance (nominal voltage)	%	-10 .... +10							
Duty		Continuous, with ambient temperature ≤ 50°C (122°F)							
Coil wire temperature not to be exceeded	°C (°F)	150 (302)							
Insulation class		H							
Compliance with		Low Voltage Directive LVD 73/23/EC (2006/95/EC), 2004/108/EC							
Coil weight with connection EN 175301-803	kg (lbs)	0.215 (0.44)							
Voltage	V	12	13	24	27	48	110	24 +RAC (21,5)	110 +RAC (98)	230 +RAC (207)
Voltage type		DC	DC	DC	DC	DC	DC	AC	AC	AC
Power consumption	W	26	26	26	26	26	26	29	29	29
Current (nominal at 20 °C (68 °F))	A	2.15	2.00	1.10	1.00	0.54	0.27	1.20	0.29	0.14
Resistance (nominal at 20 °C (68 °F))	Ω	5.5	6.5	22	28	89	413	18	338	1430

Note
For applications with different specifications consult us

5

Code	Voltage [V]	Connector type	Coil description	Marking	Coil Mat no.
=OB 01	12 DC	EN 175301-803 (Ex. DIN 43650)	C3601 12DC	12 DC	R933000044
=OB 03	12 DC	AMP JUNIOR	C3603 12DC	12 DC	R933000047
=OB 07	12 DC	DEUTSCH DT 04-2P	C3607 12DC	12 DC	R933000048
=OB 31	12 DC	Cable 350 mm long	C3631 12DC	12 DC	R933000045
=AD 01	13 DC	EN 175301-803 (Ex. DIN 43650)	C3601 13DC	13 DC	R933000051
=AD 07	13 DC	DEUTSCH DT 04-2P	C3607 13DC	13 DC	R933000049
=OC 01	24 DC	EN 175301-803 (Ex. DIN 43650)	C3601 24DC	24 DC	R933000053
=OC 03	24 DC	AMP JUNIOR	C3603 24DC	24 DC	R933000057
=OC 07	24 DC	DEUTSCH DT 04-2P	C3607 24DC	24 DC	R933000058
=OC 31	24 DC	Cable 350 mm long	C3637 24DC	24 DC	R933000055
=AC 01	27 DC	EN 175301-803 (Ex. DIN 43650)	C3601 27DC	27 DC	R933000056
=AC 07	27 DC	DEUTSCH DT 04-2P	C3607 27DC	27 DC	R933000050
=OD 01	48 DC	EN 175301-803 (Ex. DIN 43650)	C3601 48DC	48 DC	R933000059
=OE 01	110 DC	EN 175301-803 (Ex. DIN 43650)	C3601 110DC	110 DC	R933000061
=OV 01	24 RAC	EN 175301-803 (Ex. DIN 43650)	C3601 21.5DC	21.5 DC	R933000054
=OW 01	110 RAC	EN 175301-803 (Ex. DIN 43650)	C3601 98DC	98 DC	R933000060
=OZ 01	230 RAC	EN 175301-803 (Ex. DIN 43650)	C3601 207DC	207 DC	R933000062

Characteristic curves

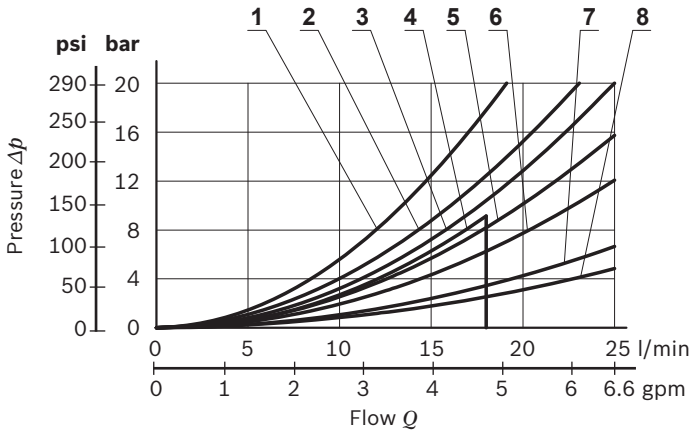

Spool Variant	Curve no.				
	P>T	P>A	P>B	A>T	B>T
A201, A301, A401, A361, A471, G201, G209	4	1	1	2	2
B201, B301, B401		5	5	7	7
B361, B471		5	5	8	8
C201, C301, C401, C361, C471, D201, D301, D401; D361, D471	6	6	6	8	8
E201, E301, E401, E361, E471, K201, K209, K301, K401		5	5	8	8
L201		5	5	8	7
L501		3	5	7	7
M201		3	3	7	6
M501		2	3	6	5
N201		3	3		
N301		2	5		
N401		5	2		
N501		2	3		
T301, T409				5	5
X301, Y301		3	5	8	6
X401, Y401		5	3	6	8

Measured with hydraulic fluid ISO-VG32 at 45° ±5 °C (113° ±9 °F); ambient temperature 20 °C (68 °F).

Performance limits

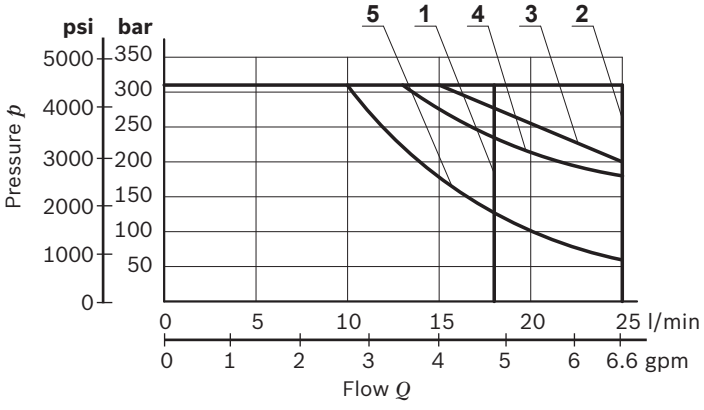

Spool Variant	Curve no.
A201; A301; A401; A361; A471; G201; G209	1
B201; B301; B401; B361; B471; C201; C301; C401; C361; C471; L201; L501; M201; M501	2
E201, E301, E401; E361; E471; D201, D301, D401; D361; D471; K201, K209; K301; K401; T301; T409	3
X301; X401; Y301; Y401	4
N201; N301; N401; N501	5

The performance curves here shown are applicable when oil flow is travelling in both directions, example P>A and B>T. In special circuit schemes the performance limits can be lower.

5

External dimensions and fittings

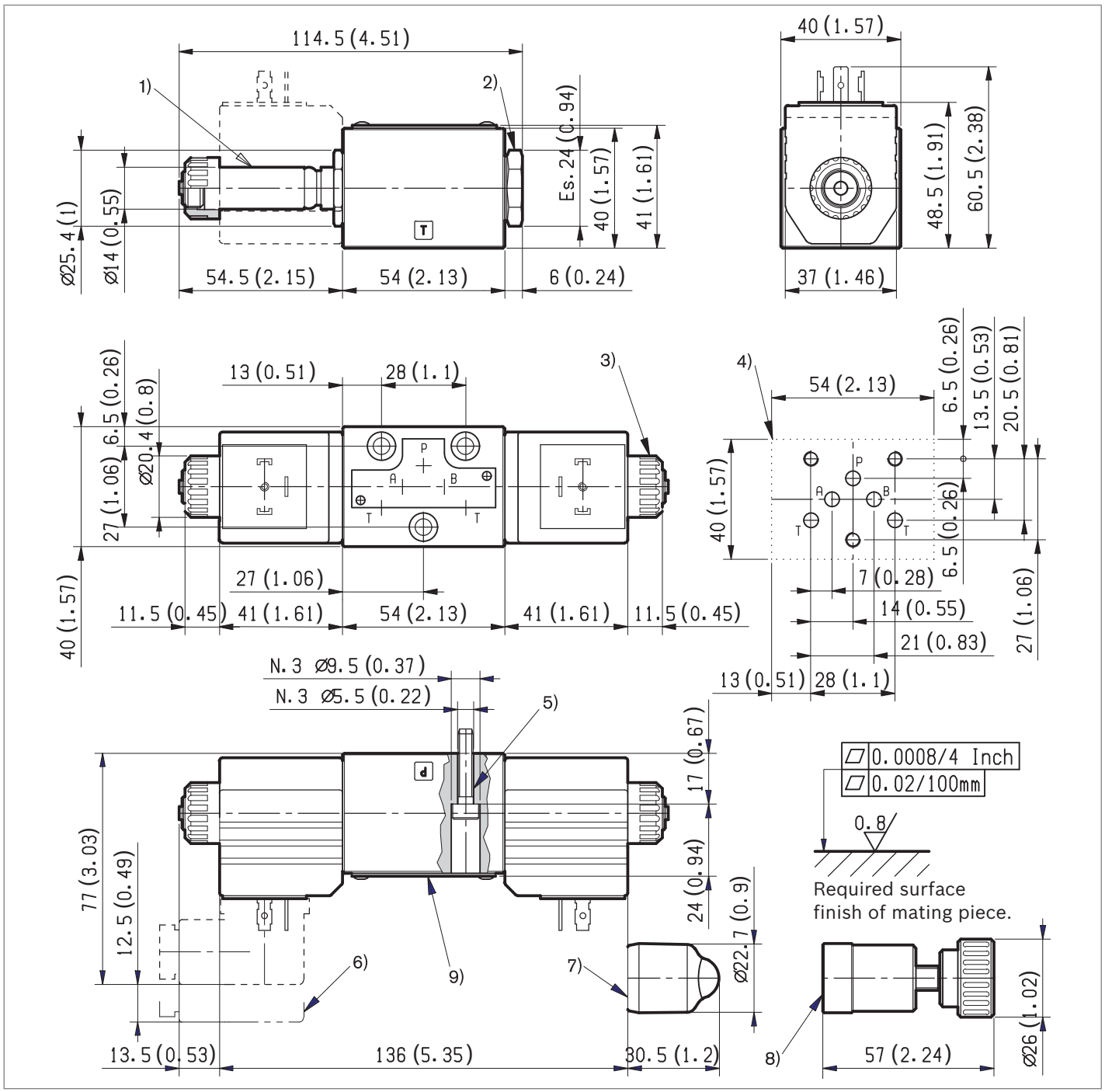

1 Tube Ø 14 mm (0.55).
2 Blinding plug for 2 positions version.
3 Ring nut (Ø 20.4 mm) for coil locking.
Torque 5 ÷ 6 Nm (3.7÷4.4 ft-lbs).
4 Drilling specifications of standard mounting surface according to CETOP RP 121 H-4.2 4-P02.
5 Locking screws 3 pieces: UNI 5931 (ISO 4762) hexagon socket head cap screw M 5x25, recommended specific strength 8.8 class. Torque 5 ÷ 6 Nm (3.7÷4.4 ft-lbs).
6 Gap needed for connector removal.
7 EP type optional override push-knob: it is pressure fitted, with adhesive, on the coil locking ring nut. Code: R933000042
8 EF type optional override threaded knob, fitted on the solenoid tube, and replacing the locking ring nut.
Torque 6 ÷ 7 Nm (4.4÷5.2 ft-lbs). Code: R933000021
9 Identification label.

Electric connection

00

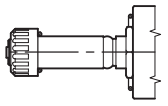

01

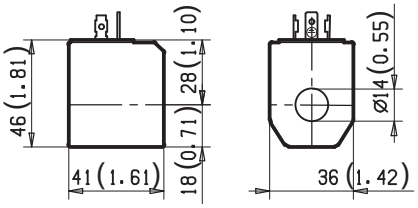

03 Protection class: IP 65 with female connector properly fitted (see drawing).

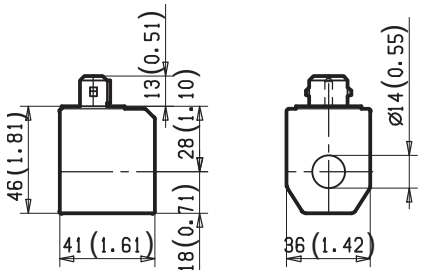

07 Protection class: IP 69 K with female connector properly fitted (see drawing).

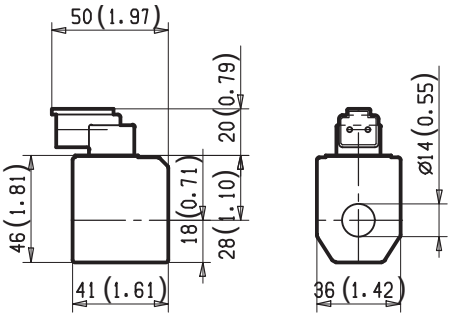

31

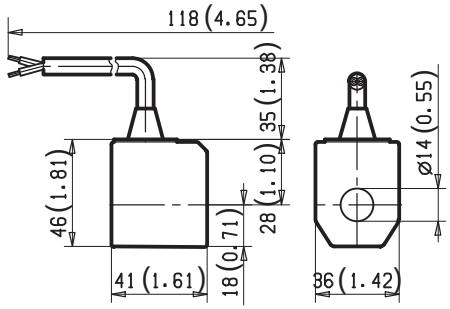

5

4/3 - 4/2 way Directional valves lever operated

L50L0... (LC04-LV)

Size 4
Series 00
Maximum operating pressure 310 bar (4500 psi)
Maximum flow 25 l/min (6.6 gpm)

General specifications

- Direct operated directional spool valve
- Hand lever actuator
- Flange mounting on industry standard surfaces according to CETOP RP121 H-4.2-4-P02

Contents

Ordering details	2
Functional description	4
Technical data	5
Characteristic curves	6
External dimensions and fittings	7

RF 15300/02/02 2016, Bosch Rexroth AG

Ordering details

01	02	03	04	05	06	07	08	09	10
L	**5**	**0**	**L0**						**00**

Family

01	Directional Valve elements	**L**

Type

02	CETOP valves	**5**

Size

03	NG 4 (P02)	**0**

Operation

04	Hand lever operated	**L0**

Hydraulic schemes [1)]

05	4/3 operated on A or B side	**_ 2 _ _**
	4/2 operated on A side	**_ 3 _ _**
	4/2 operated on B side	**_ 4 _ _**

Lever position [1)]

06	On A side	**A**
	On B side	**B**

Lever direction [3)]

07	Vertical (label side)	**0**
	Horizontal (P side)	**1**
	Vertical (Flanging side)	**2**
	Horizontal (T side)	**3**

Spool control [2)]

08	With spring return	**M**
	With detent	**F**

Spool position [2)]

09	3 position (a/0/b)	**1**
	2 position (a/b)	**2**
	2 position (a/0)	**4**

Optional

10	Standard	**00**

1) Only on the 3 position scheme (=_2__) it's possible to choose if the lever is mounted on A side or B side; for all the other schemes (=_3__ / =_4__), the lever mounting on A side or B side is univocally defined by the chosen scheme.
2) The spool positions' options depend on the chosen hydraulic scheme.
3) See overall drawing.

Symbols

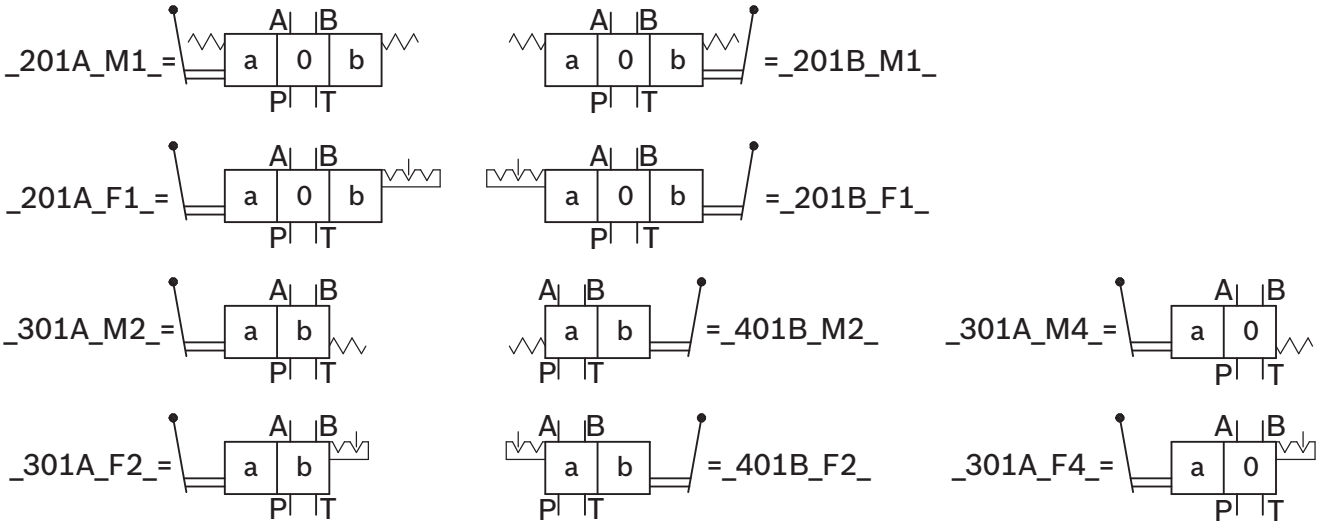

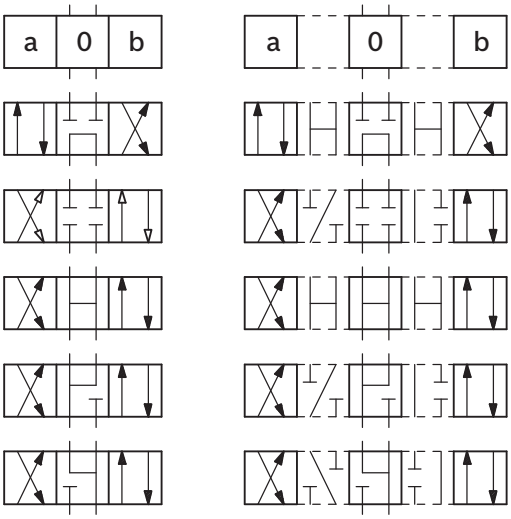

=A201
=B201
=C201
=D201
=E201

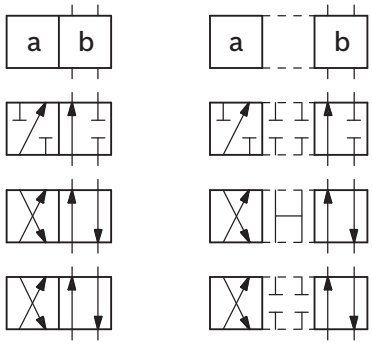

=N301
=X301
=Y301

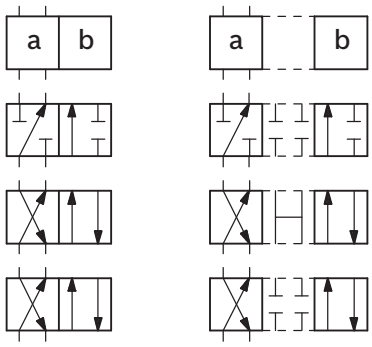

=N401
=X401
=Y401

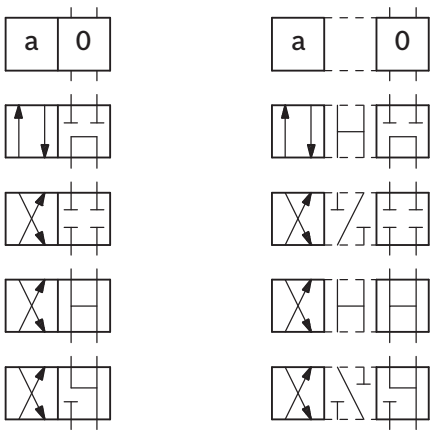

=A301
=B301
=C301
=E301

Functional description

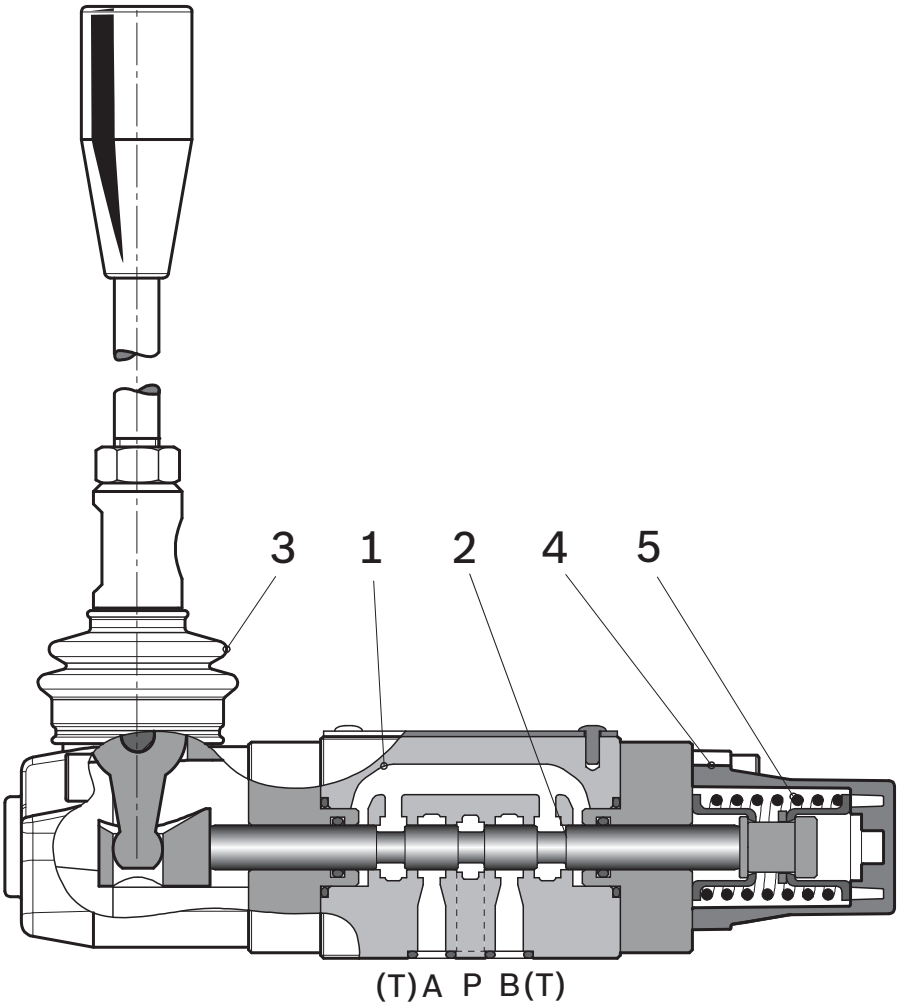

Type L50L0
The hand lever operated valves type L 50L0 provide 3 or 4 way flow control, usually from port P to either port A or B, and the consequent flow return to T from B or A respectively.
The valves are composed by a central cast iron body (**1**) which mounts on industry standard surfaces where the flow ports and the installation holes are located; the central body houses the precisely machined directional control spool (**2**) can travel between 2 or 3 position, and which is held in the neutral or initial position by the return spring (**5**), or can be maintained in the shifted poisition by a mechanical detent.
Through the hand operated lever (**3**), the control spool can be pushed from the initial position into a shifted position where oil flow is allowed from P to either A or B.
The control spool assembly (**4**) is available also with mechanical detent which holds the spool in the shifted position: in this case the spool can be brought back into the central or initial position only by actuating the hand operated lever (**3**).

Type L50L0_201_0M100
(available with hydraulic schemes =_M__ see page 17)
These are 2 or 3 positions hand lever operated valves with control spool (**2**) normally kept in the neutral or initial position by the return spring (**5**): when the control lever (**3**) is released, the spool (**2**) returns to the central or initial position pushed by the spring force.

Type L50L0_201_0F100
(available with hydraulic schemes =_F__ see page 17)
In these valves the directional control spool (**2**) can travel between 2 or 3 positions, each one with mechanical detent: the spool (**2**) stays in any reached position also if the hand control lever (**3**) is released. The hand operated lever needs to be actuated only in order to shift the spool from one position to another one.

Technical data

General		
Valve element weight	kg (lbs)	1.10 (2.25)
Mounting position		Unrestricted
Ambient Temperature	°C (°F)	–20....+50 (-4....+122) (NBR seals)
Hydraulic		
Maximum pressure at P, A and B ports	bar (psi)	310 (4500)
Maximum pressure at T	bar (psi)	160 (2320)
Maximum inlet flow	l/min (gpm)	25 (6.6)
Hydraulic fluid General properties: it must have physical lubricating and chemical properties suitable for use in hydraulic systems such as, for example:		Mineral oil based hydraulic fluids HL (DIN 51524 part 1). Mineral oil based hydraulic fluids HLP (DIN 51524 part 2). For use of environmentally acceptable fluids (vegetable or polyglycol base) please consult us.
Fluid Temperature	°C (°F)	–20....+80 (-4....+176) (NBR seals)
Permissible degree of fluid contamination		ISO 4572: $\beta_x \geq 75$ X=12...15 ISO 4406: class 20/18/15 NAS 1638: class 9
Viscosity range	mm^2/s	5....420

Note
For applications with different specifications consult us

5

Characteristic curves

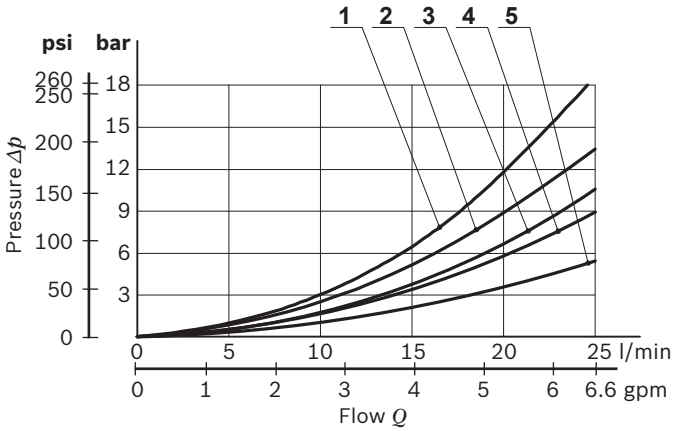

Spool Variant	Curve no.				
	P>T	P>A	P>B	A>T	B>T
A201, A301	1	2	2	3	3
B201,B301,E201, E301, Y301,Y401	-	3	3	5	5
C201,C301,X301, X401	3	3	3	5	5
D201,N301	-	4	4	-	-

Measured with hydraulic fluid ISO-VG32 at 45° ±5 °C (113° ±9 °F); ambient temperature 20 °C (68 °F).

Performance limits

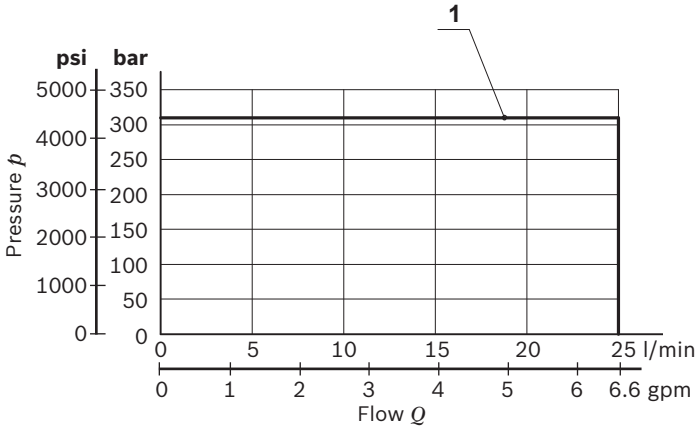

Spool Variant	Curve no.
A201,A301, B201,B301,C201,C301,D201, E201,E301,N301,X301,X401, Y301,Y401	1

External dimensions and fittings

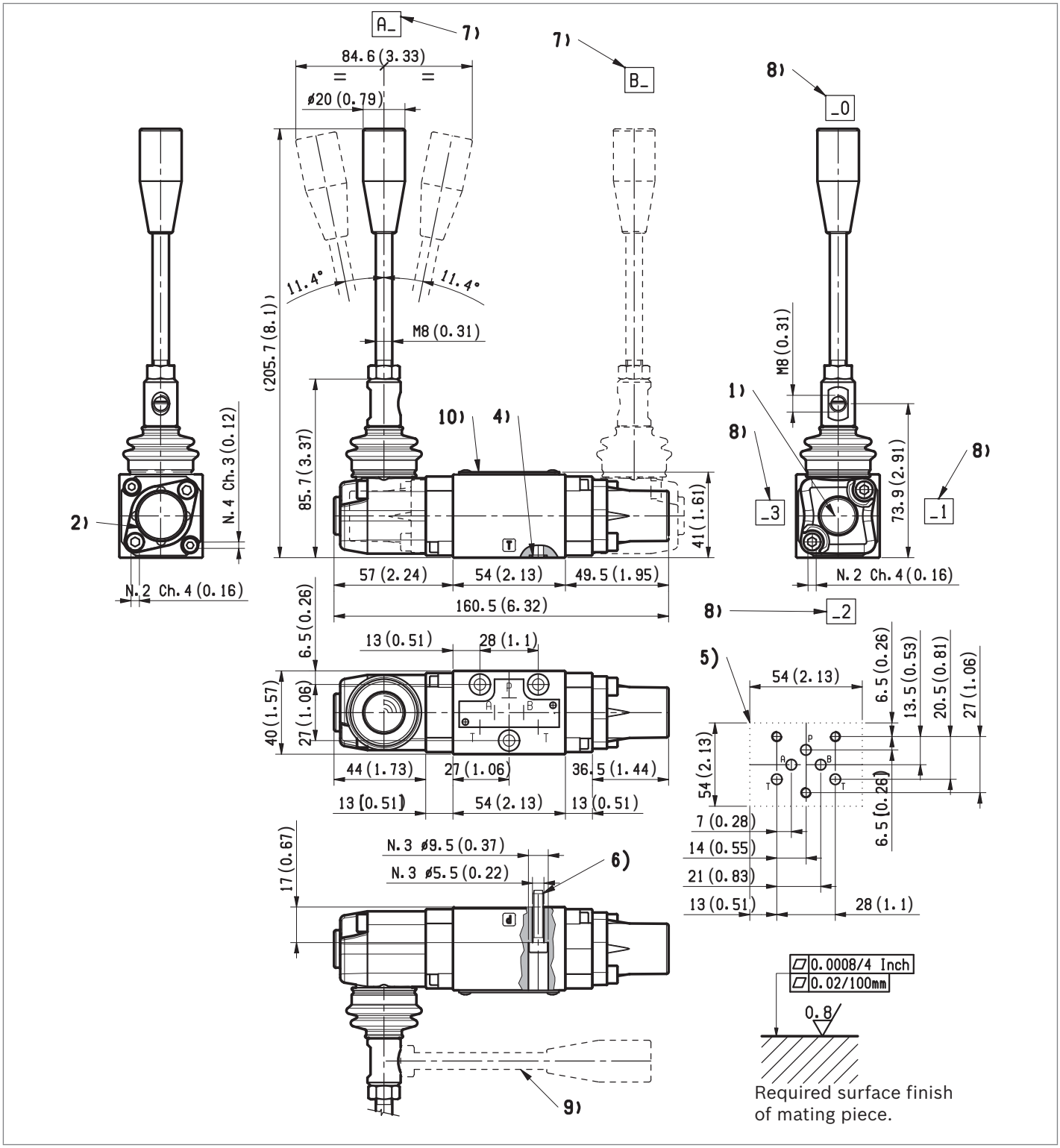

1 Hand lever assembly, with 2 fixation screws.
2 2 Rear side end cap, with 2 fixation screws M5x14.
4 Seals (same O Ring) on ports A,B,P,T.
5 Drilling specifications of standard mounting surface according to CETOP RP 121 H-4.2-4-P02.
6 Locking screws 3 pcs: ISO 4762 (UNI 5931) hexagon socket head cap screw M 5x25, recommended specific strength 8.8 class, to be ordered separately. Torque 5÷6 Nm (3.69÷4.42 ft-lb).
7 Lever assembly mounting side (Standard side is "A").
8 Lever orientation.
9 Lever packing position.
10 Identification label..

4/3 - 4/2 Proportional directional valves solenoid operated (for open loop control)

L5080... (LC04P)

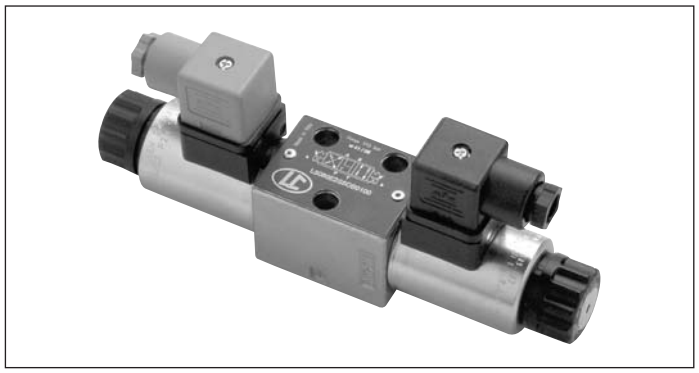

Size 4
Series 00
Maximum operating pressure 310 bar (4500 psi)
Maximum flow 12 l/min (3.17 gpm)

General specifications

Proportional solenoid operated directional spool valve.
Actuation by proportional solenoids with a central tube and removable coil.
Spring centered control spool.
For mounting on industry standard surface port pattern to CETOP RP121 H-4.2-P02.
Wet pin DC solenoids with removable coil and manual override.
Coil can be rotated by 360°.

Contents

Ordering details	2
Functional description	3
Technical data	4
Characteristic curves	5
Characteristic curves	6
External dimensions and fittings	7
Electric connection	8

5

Ordering details

01	02	03	04	05	06	07	08	09	10
L	**5**	**0**	**80**						**00**

Family

01	Directional Valve elements	**L**

Type

02	CETOP valves	**5**

Size

03	NG 4 (P02)	**0**

Operation

04	Solenoid operated P45 proportional coil	**80**

Spools

05	P – T closed in neutral	**B**
	A and B to T in neutral	**E**

Hydraulic scheme

06	4/3 operated A and B side	**2**
	4/2 operated A side	**3**
	4/2 operated B side	**4**

Nominal flow [1)]

07	4 l/min (1.06 gpm)	**S3**
	8 l/min (2.11 gpm)	**S4**
	12 l/min (3.17 gpm)	**S5**

Voltage

08	Without coil	**00**
	12V DC	**OB**
	24V DC	**OC**

Electric connections

09	Without coils	**00**
	With coils, without mating connector DIN EN 175301-803	**01** [2)]
	With coils, with bi-directional diode, without mating connector vertical Amp-Junior	**03**

Optional

10	Standard	**00**

Spool variants

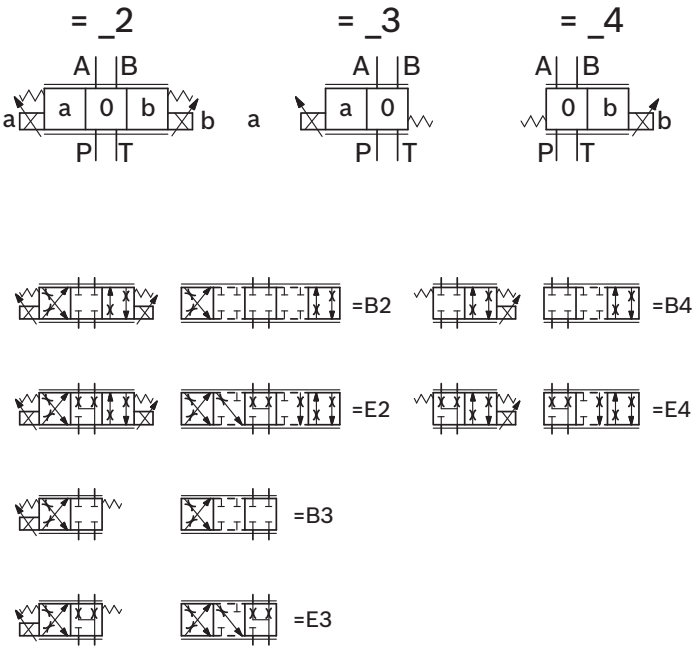

1) With Δp (P > T) 10 bar (145 psi), corresponding approx. to Δp P>A,B 5 bar (73 psi).
2) For connectors ordering code see data sheet RE 18325-90.

Functional description

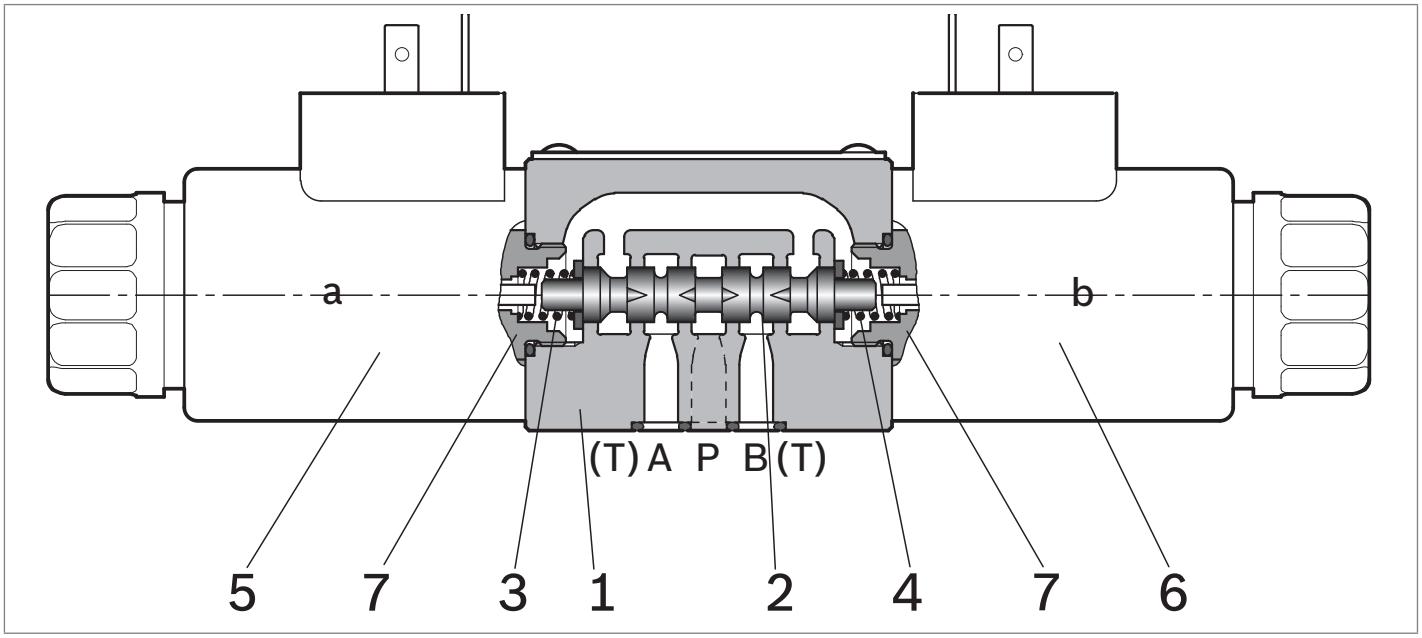

Type L5080
The proportional valves type L5080 are designed as the solenoid operated ones; they are actuated by proportional electromagnets and the current supply to the solenoids is controlled by external electronic control system (Power Wave Modulator, or PWM). They provide 3 or 4 way flow control, usually from port P to either port A or B, and the consequent flow return to T from B or A respectively.
The valves are composed by a central cast iron body (**1**) which mounts on industry standard surfaces where the flow ports and the installation holes are located; the central body houses the precisely machined directional control spool (**2**) which is held in the neutral or initial position by the return springs (**3**) and (**4**). One or two solenoids (**5**) and (6), composed by a central tube and a surrounding coil (a) and (b), are fitted to the body at the spool's ends: when one coil is energized, the magnetic field develops a force on the oil immersed mobile plunger incorporated in the tube which pushes the control spool from the initial position into a displaced position: the spool displacement is proportional to the electric input.
Example for solenoid (**6**):
- when coil (b) is energized, the spool (**2**) travels to the left proportionally to the electric input supply then the corresponding opening area of the spool notches is achieved.
- Across the orifice-like openings, flow becomes possible from P to A, and from B to T.
- When coil (**b**) is de-energized, the force of spring (**3**) pushes the spool (**2**) back to the central position.

Type L5080.3... and L5080.4...
These valves have one solenoid, either (**a**) or (**b**), consequently the directional control spool can travel from the initial position to one side only. A blinding threaded plug (**7**) is fitted in place of the second solenoid.

5

Technical data

General			
Valve element with 2 solenoids		kg (lbs)	1.27 (2.8)
Valve element with 1 solenoid		kg (lbs)	0.91 (2.0)
Mounting position			Unrestricted
Ambient Temperature		°C (°F)	–20....+50 (-4....+122) (NBR seals)
Hydraulic			
Maximum pressure at P, A and B ports		bar (psi)	310 (4500)
Maximum pressure at T		bar (psi)	180 (2610)
Maximum inlet flow		l/min (gpm)	29 (7.66)
Nominal flow at ΔP = 10 bar		l/min (gpm)	4, 8, 12 (1.06, 2.11, 3.17)
E-schemes p closed in the neutral position (connection from A to T and B to T)			Approx. 2.3% of the nominal cross-section
Hysteresis		%	≤ 5
Hydraulic fluid General properties: it must have physical lubricating and chemical properties suitable for use in hydraulic systems such as, for example:			Mineral oil based hydraulic fluids HL (DIN 51524 part 1). Mineral oil based hydraulic fluids HLP (DIN 51524 part 2). For use of environmentally acceptable fluids (vegetable or polyglycol base) please consult us.
Fluid Temperature		°C (°F)	–20....+80 (-4....+176) (NBR seals)
Permissible degree of fluid contamination			ISO 4572: $\beta_x \geq 75$ X=10...12 ISO 4406: class 19/17/14 NAS 1638: class 8
Viscosity range		mm^2/s	20....380 (optimal 30....46)
Electrical			
Voltage type		PWM	120 Hz
Voltage tolerance (nominal voltage)		%	-10 .... +10
Duty			Continuous, with ambient temperature ≤ 50°C (122°F)
Coil wire temperature not to be exceeded		°C (°F)	150 (302)
Insulation class			H
Compliance with			Low Voltage Directive LVD 73/23/EC (2006/95/EC), 2004/108/EC
Coil weight		kg (lbs)	0.228 (0.503)
Voltage		V	12 24
Nominal 100% current		A	1.76 0.94
Coil resistance (nominal at 20°C (68°F))	- Cold value	Ω	3.71 13
	- Max. hot value	Ω	6.1 22.9

Note
For applications with different specifications consult us

Code	Voltage [V]	Connector type	Coil description	Marking	Coil Mat no.
=OB 01	12 DC	EN 175301-803 (Ex. DIN 43650)	P45 01	12 DC	R933000088
=OB 03	12 DC	AMP JUNIOR	P45 03	12 DC	R933000089
=OC 01	24 DC	EN 175301-803 (Ex. DIN 43650)	P45 01	24 DC	R933000090
=OC 03	24 DC	AMP JUNIOR	P45 03	24 DC	R933000091

Characteristic curves

Ordering code S3: it supplies 4 l/min (1.06 gpm) nominal flow at 100% duty cycle, with 10 bar (145 psi) pressure drop.

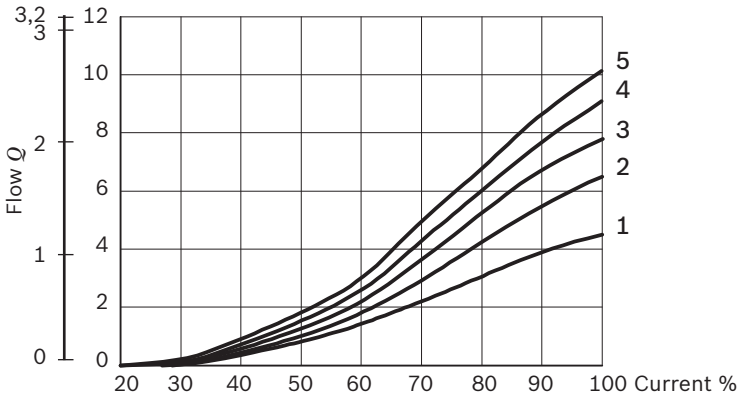

1 ΔP = 10 bar (145 psi) constant
2 ΔP = 20 bar (290 psi) constant
3 ΔP = 30 bar (435 psi) constant
4 ΔP = 40 bar (580 psi) constant
5 ΔP = 50 bar (725 psi) constant

Ordering code S4: it supplies 8 l/min (2.11 gpm) nominal flow at 100% duty cycle, with 10 bar (145 psi) pressure drop.

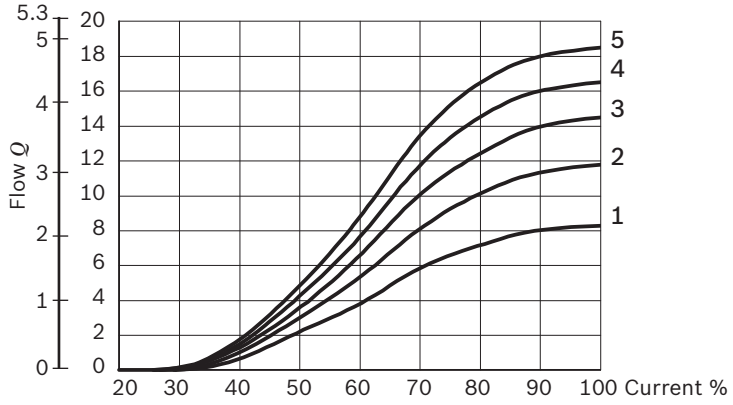

1 ΔP = 10 bar (145 psi) constant
2 ΔP = 20 bar (290 psi) constant
3 ΔP = 30 bar (435 psi) constant
4 ΔP = 40 bar (580 psi) constant
5 ΔP = 50 bar (725 psi) constant

Ordering code S5: it supplies 12 l/min (3.17 gpm) nominal flow at 100% duty cycle, with 10 bar (145 psi) pressure drop.

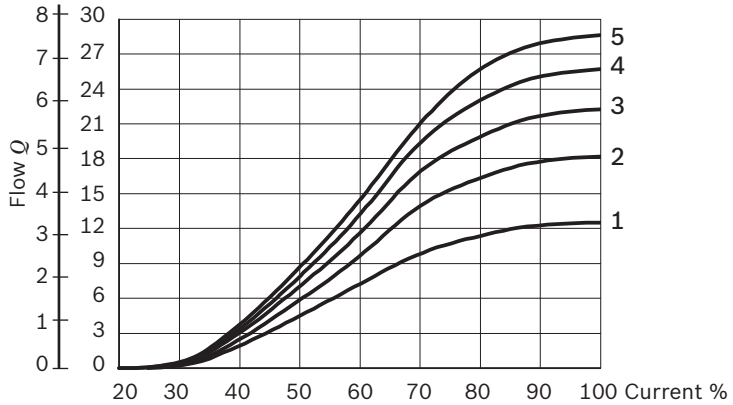

1 ΔP = 10 bar (145 psi) constant
2 ΔP = 20 bar (290 psi) constant
3 ΔP = 30 bar (435 psi) constant
4 ΔP = 40 bar (580 psi) constant
5 ΔP = 50 bar (725 psi) constant

Measured with hydraulic fluid ISO-VG32 at 45° ±5 °C (113° ±9 °F); ambient temperature 20 °C (68 °F).

Δp= valve pressure differential (inlet pressure Pp minus load Pl and minus return pressure Pt).
The characteristic curves are obtained with 4 way connected, P→A / B→T or P→B / A→T.

Characteristic curves

Ordering code S3

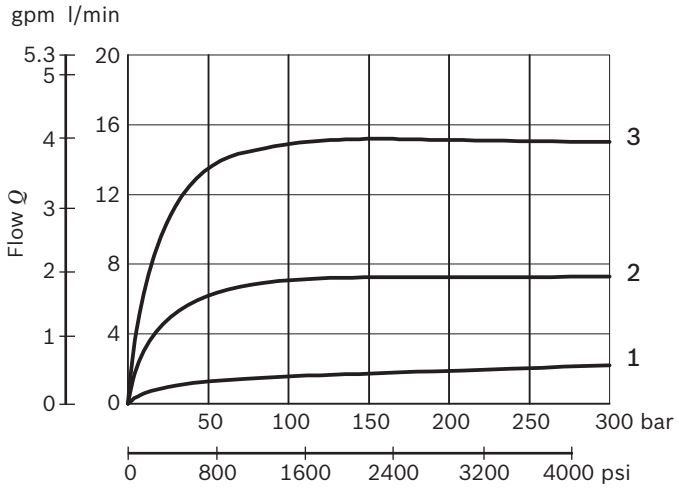

1 at 40% mean current
2 at 70% mean current
3 at 100% mean current

Ordering code S4

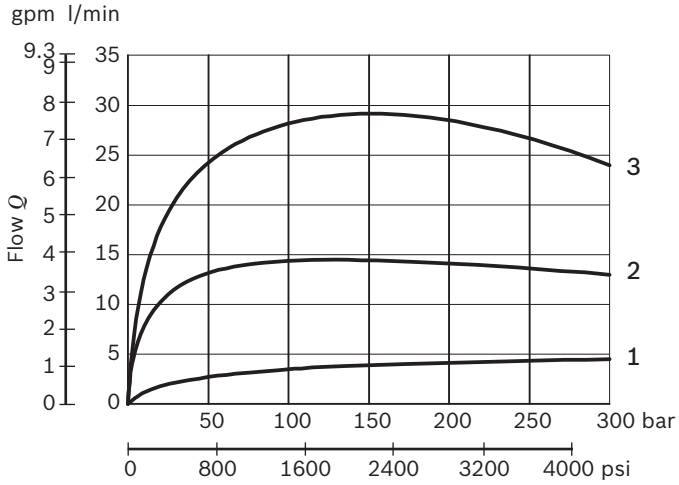

1 at 40% mean current
2 at 70% mean current
3 at 100% mean current

Ordering code S5

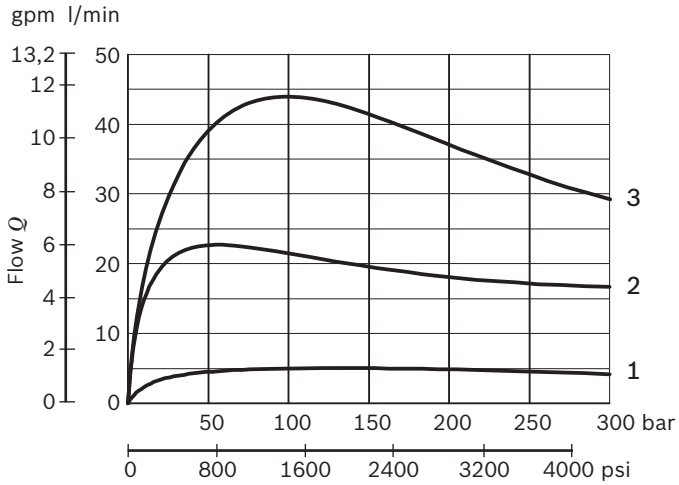

1 at 40% mean current
2 at 70% mean current
3 at 100% mean current

The performance curves are obtained with two ports connected,
P→A or P→B.

External dimensions and fittings

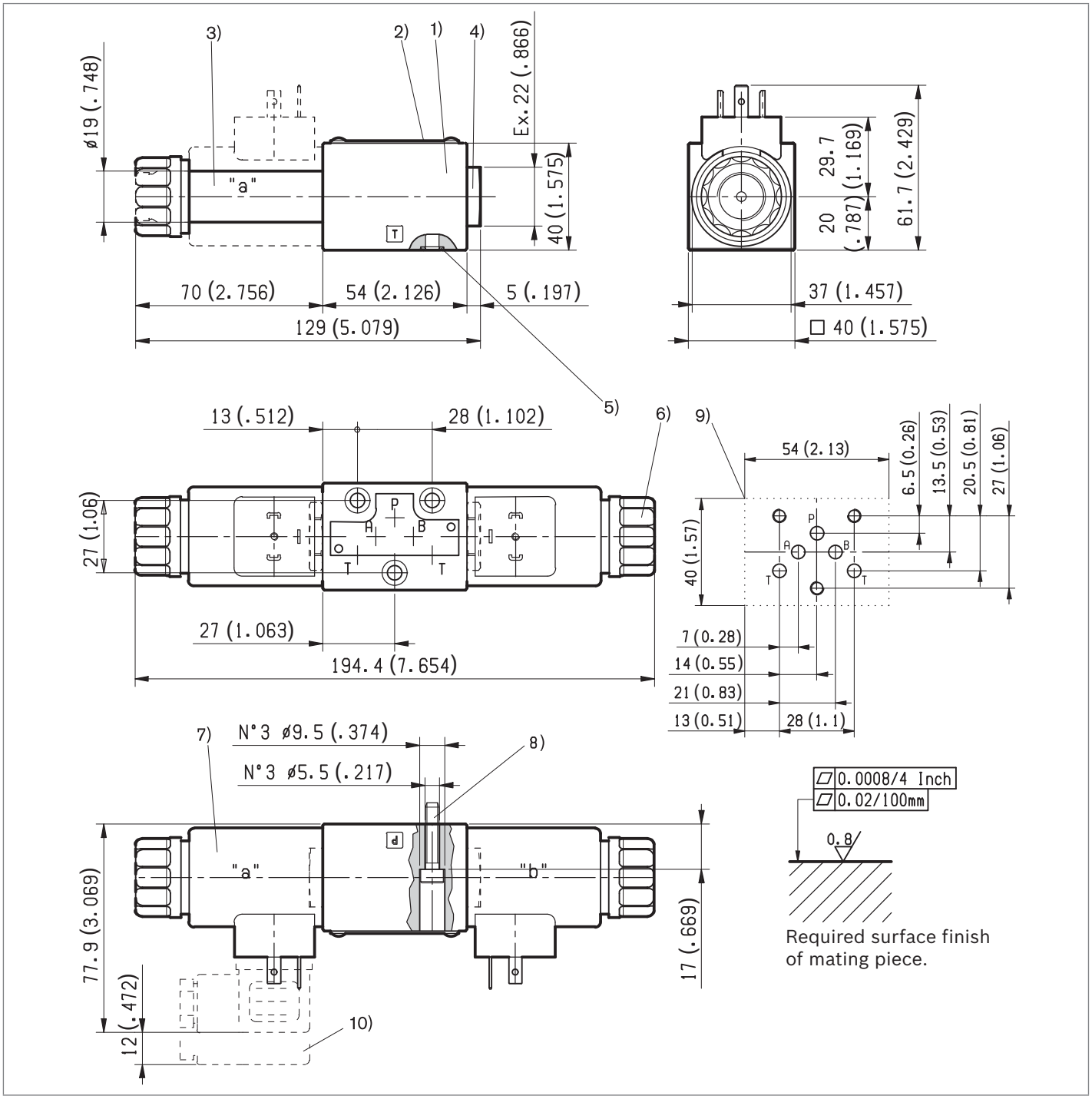

1 Valve body.
2 Identification label.
3 Proportional solenoid.
4 Blinding threaded plug, for versions L 5080.3... and L5080.4..., with 2 switched positions.
5 Seals (same O Ring) on ports A,B,P,T.
6 Threaded coil retainer nut. Torque 5÷6 Nm (3.69÷4.42 ft-lb).
7 Proportional solenoid, with coil (a).
8 Locking screws 3 pieces: ISO 4762 (UNI 5931) hexagon socket head cap screw M 5x25, recommended specific strength 8.8 class, to be ordered separately. Torque 5 ÷ 6 Nm (3.69 ÷ 4.42 ft-lb).
9 Drilling specifications of standard mounting surface according to CETOP RP 121 H-4.2-4-P02.
10 Clearance needed for connector removal.

Electric connection

00 without coil

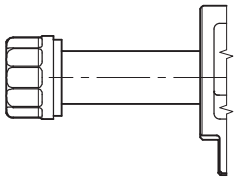

01 Protection class: IP 65 when connector with seal is properly screwed down.

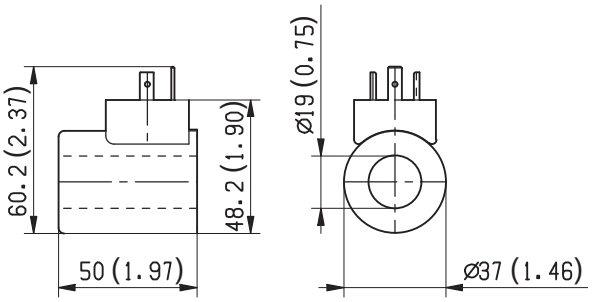

03 Protection class: IP 65 with female connector properly fitted (see drawing).

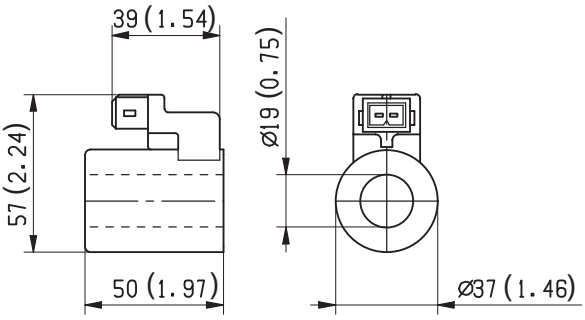

2 or 3 way pressure compensated flow regulators

L6090... (LC04M-CBL) - L6095... (LC04M-CBD)

Size 4
Series 00
Maximum operating pressure 310 bar (4500 psi)
Maximum flow (2-way) 12 l/min (3.2 gpm)
Maximum flow (3-way) 20 l/min (5.3 gpm)

General specifications

2-way or 3-way pressure compensator valve with fixed setting.
Sandwich body with CETOP RP 121 H-4.2-4-P02 interface.
They maintain a constant, pre-established, pressure drop between ports P and A, P and B.
If employed in combination with proportional directional valves, they control the flow and maintain it constant for each spool position, regardless of working pressure.
Cast iron body.
Zinc plated external surfaces.

Contents

Ordering details	2
Symbols	2
Functional description	3
Technical data	4
Characteristic curves	5
External dimensions and fittings	6

5

RF 18300/04/02 2016, Bosch Rexroth AG

Ordering details

01	02	03	04	05	06
L	**6**	**0**			**00**

Family

01	Directional valve	**L**

Type

02	CETOP Sandwich	**6**

Size

03	NG 4 (P02)	**0**

Valve type

04	CBL 2-way pressure compensator	**90**
	CBD 3-way pressure compensator	**95**[1)]

Pressure drop (spring)

05	9 bar (131 psi)	**01**
	12 bar (174 psi)	**02**[1)]
	5 bar (73 psi)	**03**[1)]

Optionals

06	Standard	**00**

1) Only for 95 CBD version.

Symbols

L6090 _ _ _

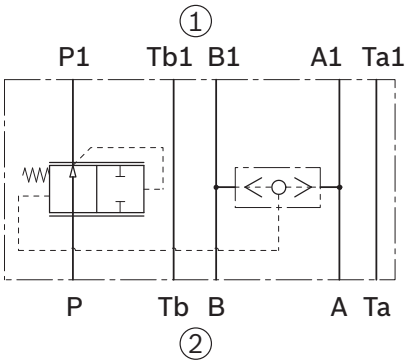

L6095 _ _ _

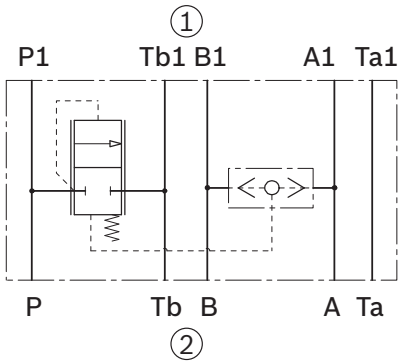

1 = directional valve side 2 = sub-plate side

Functional description

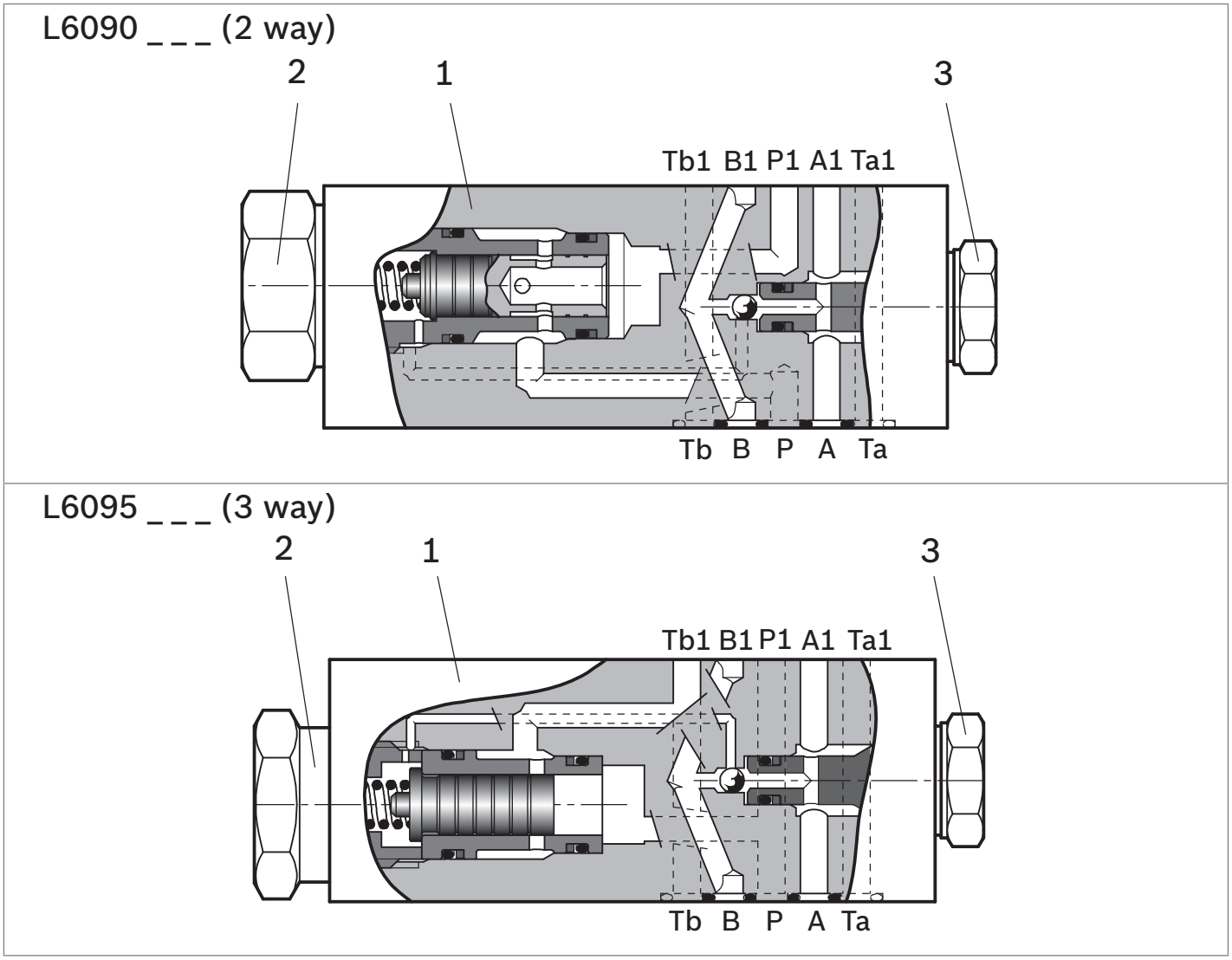

Type L6090... and L6095...
Inside the sandwich type body (**1**) there is a 2-way or 3-way spring loaded pressure compensator which automatically adjusts its position in order to reach equilibrium and maintain a constant pressure difference between P and A (or **P** and **B**) ports. For any given spool position, the compensator modulates the opening until a constant pressure drop and a constant flow rate is established regardless of working pressure. An incorporated shuttle valve supplies the A or B pressure signal to the “spring side” of the compensator; the compensator is exposed to the inlet (**P**) pressure on one side and to the outlet (**A** or **B**) pressure, plus spring load, on the opposite side. In conclusion, the pressure difference between inlet and outlet is determined by the spring load, which is designed to remain nearly constant as the compensator moves, allowing more or less flow, until the equilibrium position is reached.

5

RF 18308/04/02 2016 Bosch Rexroth AG

967

Technical data

General		
Valve weight L6090	kg (lbs)	1.13 (2.49)
Valve weight L6095	kg (lbs)	1.10 (2.43)
Mounting position		unrestricted
Ambient Temperature	°C (°F)	–20....+50 (-4....+122) (NBR seals)
Hydraulic		
Maximum pressure	bar (psi)	310 (4500)
Maximum flow	l/min (gpm)	See diagram “Δp“ (pressure drop)
Compensation	%	± 5 of regulated
Hydraulic fluid General properties: it must have physical lubricating and chemical properties suitable for use in hydraulic systems such as, for example:		Mineral oil based hydraulic fluids HL (DIN 51524 part 1). Mineral oil based hydraulic fluids HLP (DIN 51524 part 2). For use of environmentally acceptable fluids (vegetable or polyglycol base) please consult us.
Fluid Temperature	°C (°F)	–20....+80 (-4....+176) (NBR seals)
Permissible degree of fluid contamination		ISO 4572: $\beta_x \geq 75$ X = 10...12 ISO 4406: class 19/17/14 NAS 1638: class 8
Viscosity range	mm^2/s	5....420

Note
For applications with different specifications consult us

Characteristic curves

L6090 _ _ _ (2 way)

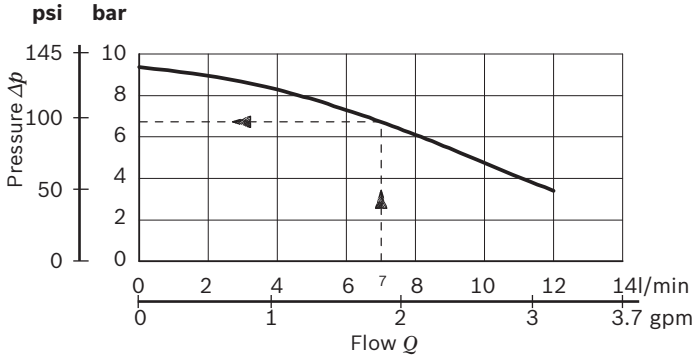

L6095 _ _ _ (3 way)

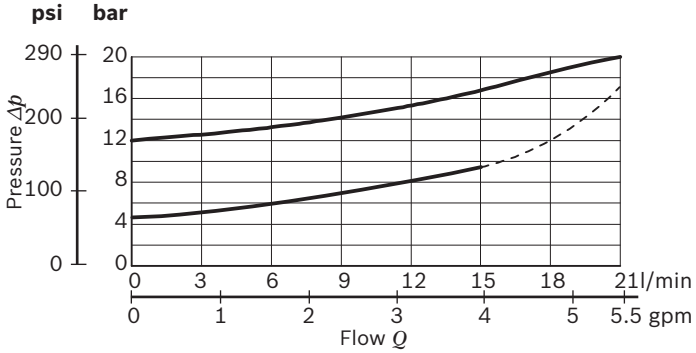

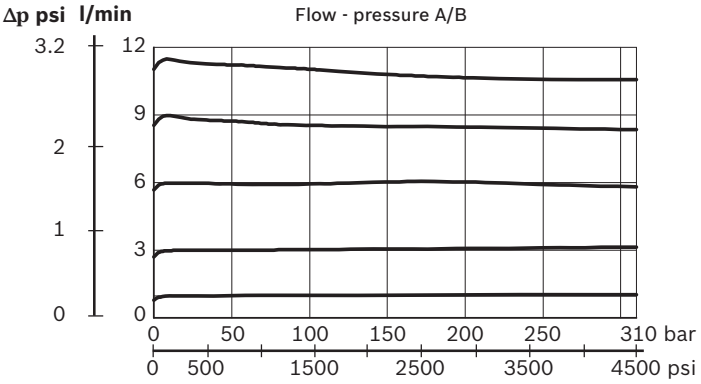

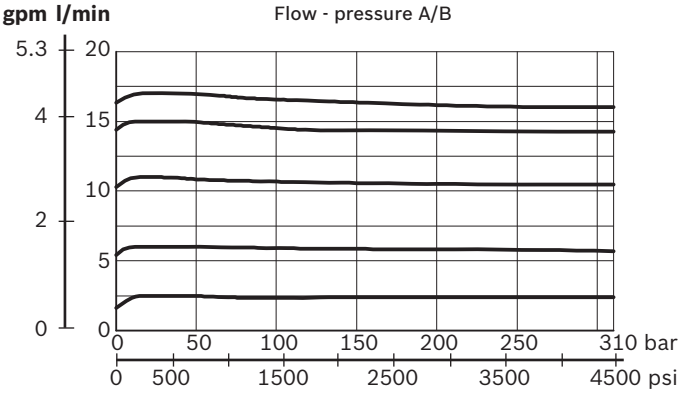

EXPLANATION OF THE DIAGRAM
known the maximum regulated flow, is possible know the maximum permissible pressure drop in the flow regulator valve (P-A or P-B) for obtain the required flow.

Example
Given: the regulated flow = 7 l/min (1.85 gpm).
Required: the maximum permissible pressure drop.
Select the value 7 on the X line within the diagram above, follow the arrows up to the value in Y line. The value found is the maximum permissible flow regulator valve's pressure drop, impossible obtain the flow request with a pressure drop upper.

Measured with hydraulic fluid ISO-VG32 at 45° ±5 °C (113° ±9 °F); ambient temperature 20 °C (68 °F).

Note
Characteristic curves are obtained with Ta and Tb connected by proportional operated directional valves

5

External dimensions and fittings

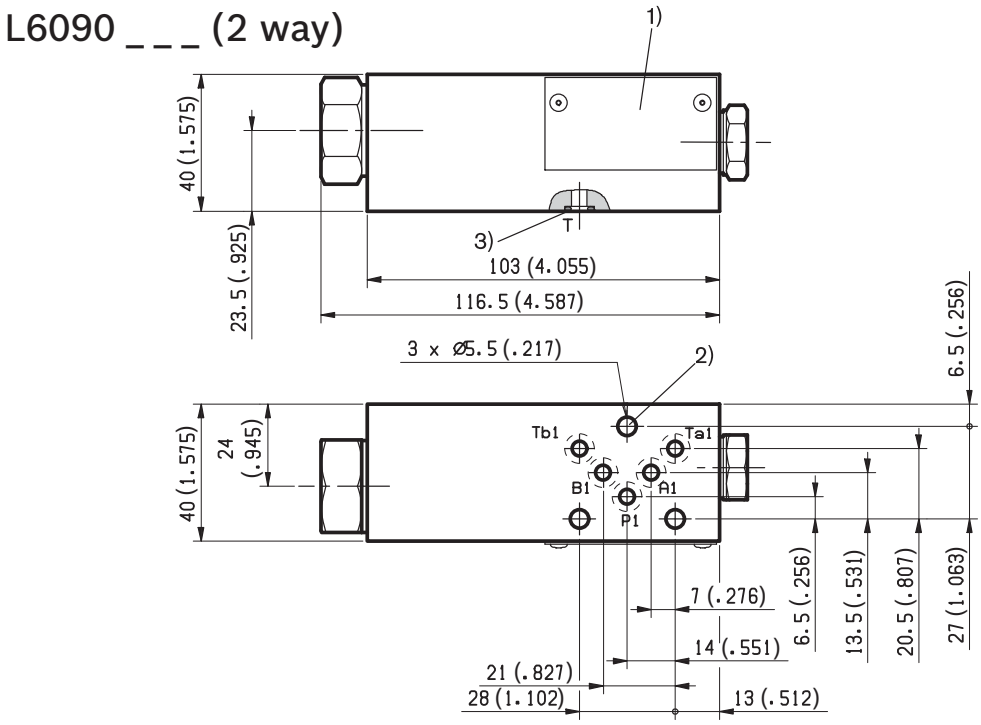

1 Label
2 Mounting holes, only for M5 DIN 912-8.8, tightening torque = 5 ÷ 6 Nm (3.6 ÷ 4.4 ft-lb)
3 Same sealing as in A,B,P,T ports.

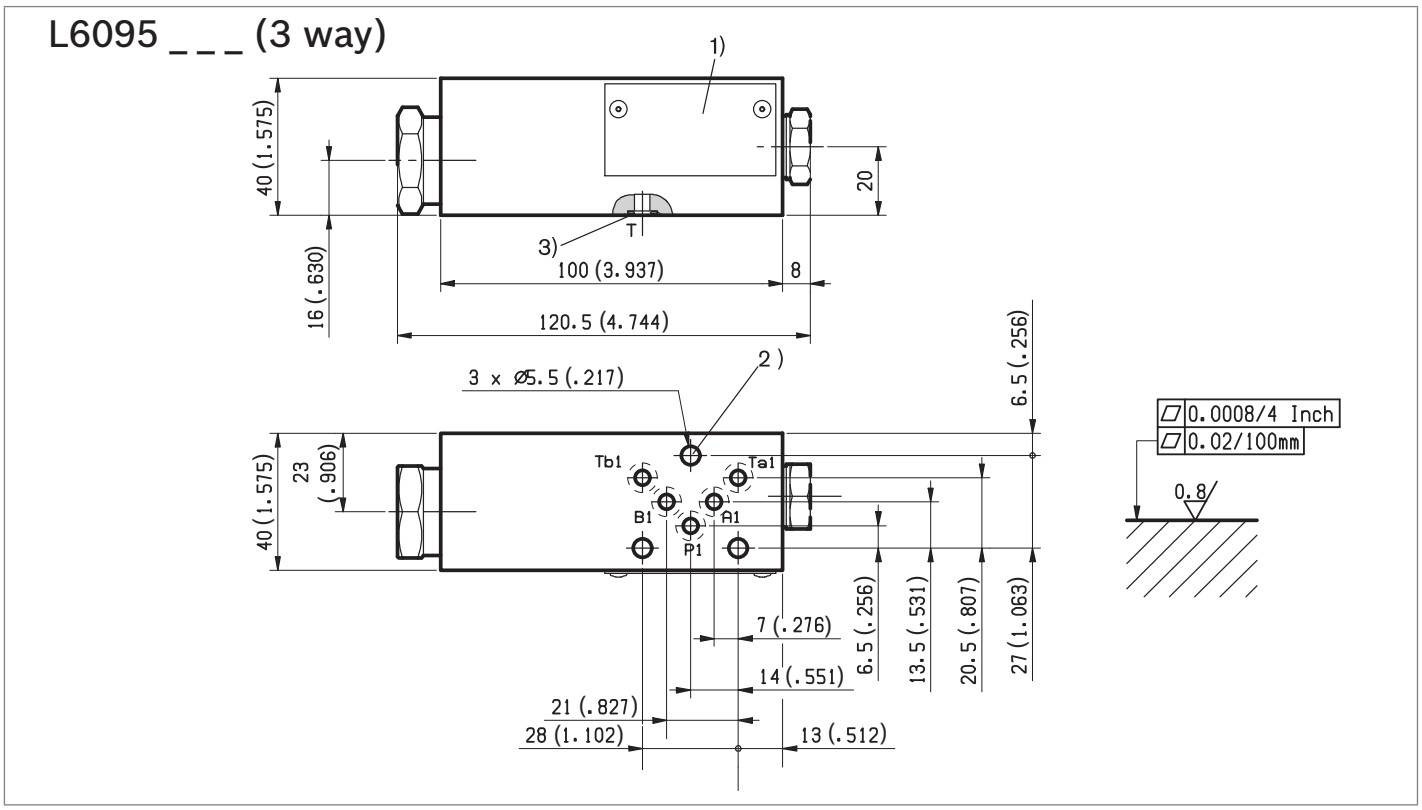

1 Label
2 Mounting holes, only for M5 DIN 912-8.8, tightening torque = 5 ÷ 6 Nm (3.6 ÷ 4.4 ft-lb)
3 Same sealing as in A,B,P,T ports.

5

Modular direct and pilot operated check valves

L6040... (LC04M-VR/AB-0A-0B-P-T)

Description

Function, section (1=component side, 2=plate side)

Type L60400AB-A-B...:

Isolator valve type L6040 is a pilot operated check valve of sandwich plate design. It is used for the leak-free closure of one or of two actuator ports, even during longer periods of standstill. The oil can freely flow from A1 to A or B1 to B, where as in the opposite direction the flow is blocked.

When fluid flows through the valve from A1 to A or B1 to B, spool (1) is pressurised and therefore shifted to the right or to the left, which causes poppet (2) to be pushed off its seat. Hydraulic fluid can now flow from B to B1 or from A to A1.

To allow reliable closing of poppets (2), the actuator ports of the directional valve must be unloaded to tank in the central position (see circuit example).

Type L60400P-T...:

Valve type L6040... is a direct operated check valve of sandwich plate design. It is used for leak-free checking in one direction and allows free flow in the opposite direction. When no fluid flows through the valve, spring holds poppet in the closed position.

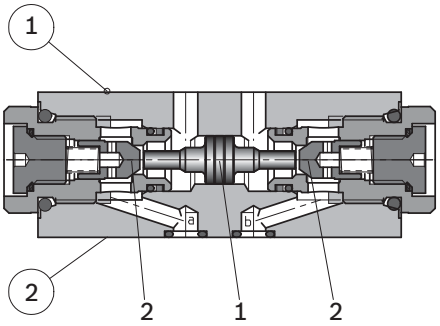

Technical data

General		
Weight VR/AB	kg (lbs)	0.73 (1.61)
Weight VR/P or VR/T	kg (lbs)	0.59 (1.30)
Ambient Temperature	°C (°F)	-20....+50 (-50....+122) (NBR seals)
Hydraulic		
Maximum pressure	bar (psi)	310 (4495)
Maximum flow	l/min (gpm)	25 (6.6)
Cracking pressure in free direction	bar (psi)	1 (14.5)
Area ratio		2.8
Hydraulic fluid General properties: it must have physical lubricating and chemical properties suitable for use in hydraulic systems such as, for example:		Mineral oil based hydraulic fluids HL (DIN 51524 part 1). Mineral oil based hydraulic fluids HLP (DIN 51524 part 2). For use of environmentally acceptable fluids (vegetable or polyglycol base) please consult us.
Fluid Temperature	°C (°F)	–20....+80 (-50....+176) (NBR)
Permissible degree of fluid contamination		ISO 4572: $\beta_x \geq 75$ X=12...15 ISO 4406: class 20/18/15 NAS 1638: class 9
Viscosity range	mm^2/s	5....420

Note

For applications with different specifications consult us

5

Ordering details

01	02	03	04	05	06		
L	**60**	**40**	**00**		**01**	**00**	**00**

Family

01	Directional Valve	**L**

Type

02	Size 4 - NG4 (P02) CETOP RP 121 H-4.2-4 P02	**60**

Valve Type

03	Relief Valve	**40**

Pilot Ratio

04	2.8:1	**00**

Pilot Operated Check valves

05	Pilot operated check valves on A and B lines	**AB**
	Pilot operated check valve on A line	**0A**
	Pilot operated check valve on B line	**0B**
	Pilot operated check valve on P line	**0P**
	Pilot operated check valve on T line	**0T**

Cracking pressure

06	1bar (14.5psi)	**01**

Symbols

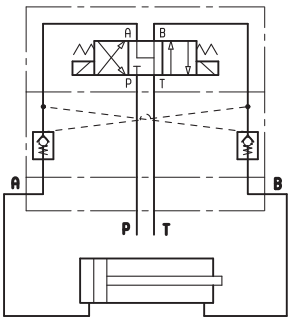

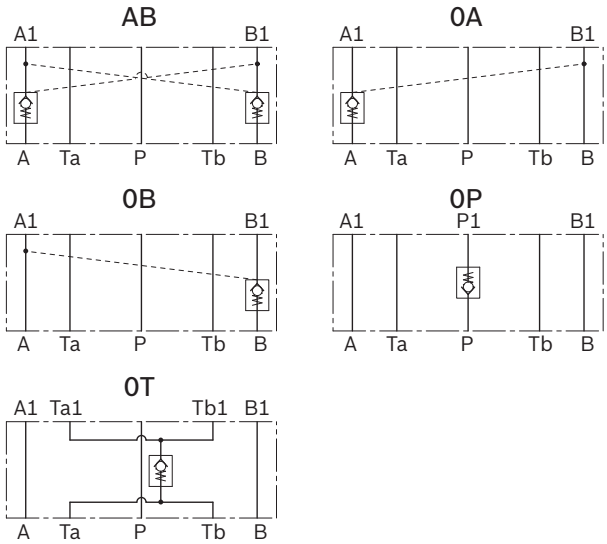

Characteristic curves

Pressure drop

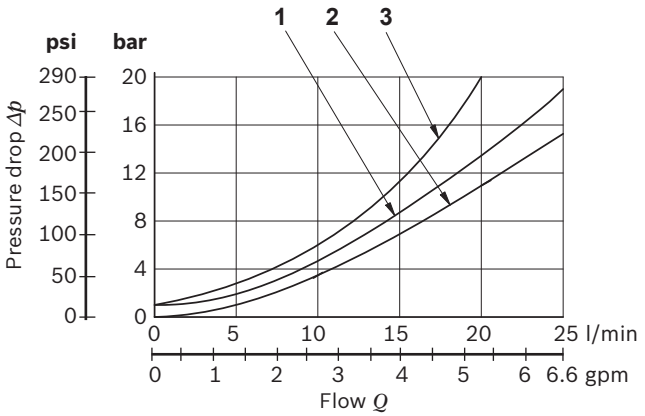

Model	Connection	Curve No.
L604000AB010000 L6040000A010000 L6040000B010000	A1>A e B1>B	1
L604000AB010000 L6040000A010000 L6040000B010000	A>A1 e B>B1	2
L6040000P010000 L6040000T010000	P>P1 e Ta1/b1>Ta/b	3

Measured with hydraulic fluid ISO-VG32 at 45° ±5 °C (113° ±9 °F); ambient temperature 20 °C (68 °F).

5

Dimensions [mm (inches)]

External dimensions and fittings

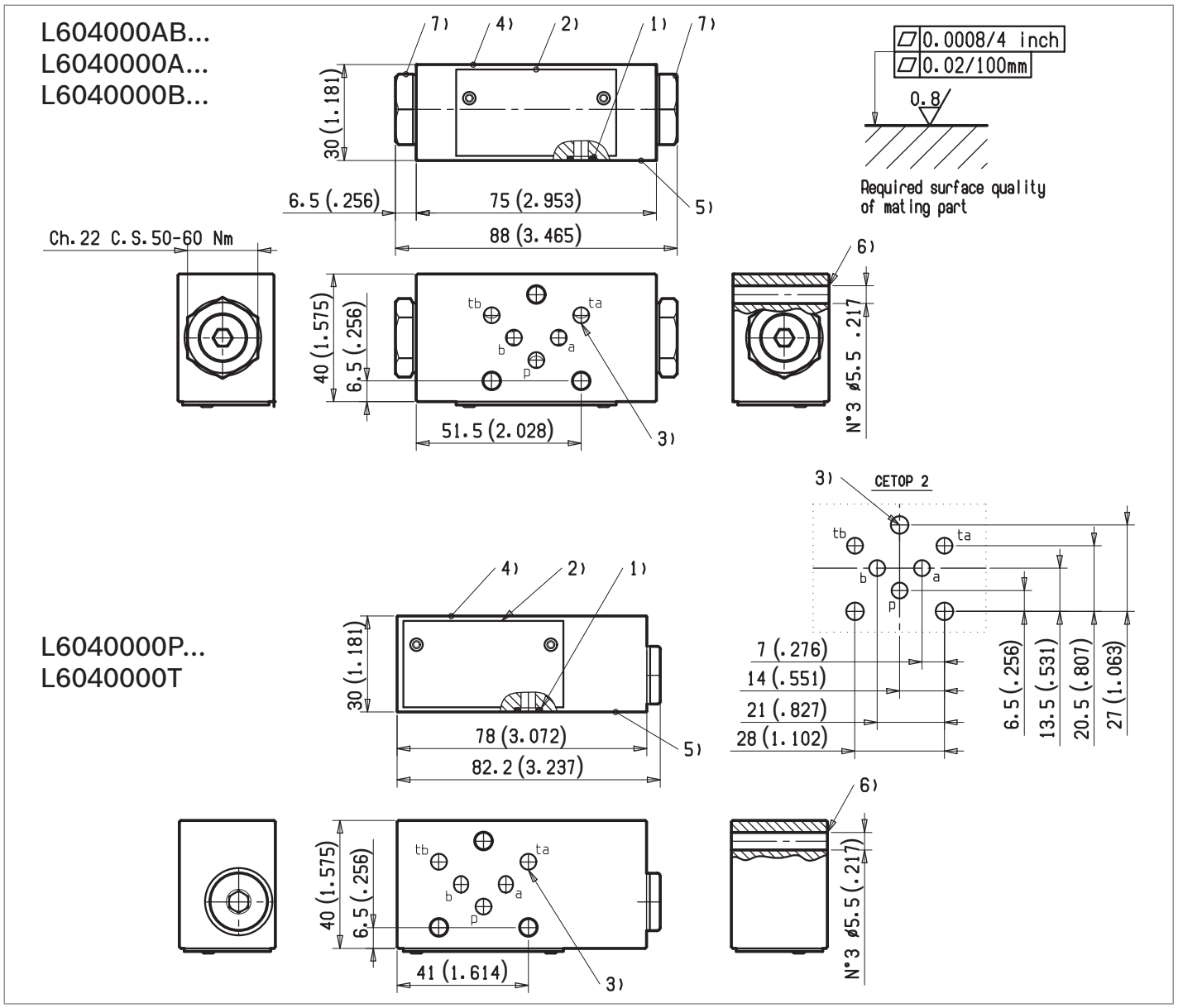

1 Identical seals rings for ports A, B, P, T.
2 Nameplate.
3 Position of port to CETOP RP 121 H-4.2-4 P02.
4 Component side.
5 Plate side.
6 Valve fixing bores, for M5 DIN912-8.8.
Tightening torque 5-6Nm (3.6-4.4 ft-lb).
Check valve; hex 24mm (0.95 inch).
Tightening torque 34-41 Nm (25-30 ft-lb).

Compact power modules

Designation	Description	Code	Data sheet	Page
Compact power modules – Group 0,5	ME - MR Series	ME - MR	18306-01	979
Compact power modules – Group 1	KE, K and KS Series	KE - K - KS	18306-02	1067
Compact power modules – Group DL	DL Series	DL	18306-03	1199
Compact power modules – Group MT	MT Series	MT	18306-04	1225

Compact power modules
ME - MR series

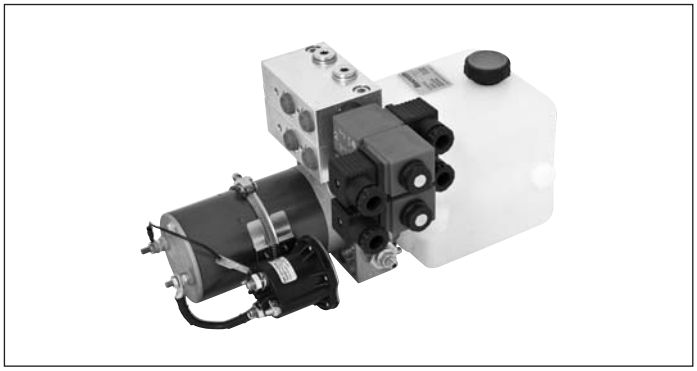

Contents

Ordering Details for Modules ME with A.C. Motor	2
Ordering Details for Modules ME with D.C. Motor	4
Ordering Details for Compact Power Modules MR	6
General Technical Data for Compact Power Module ME and MR	7
Compact Power Module Type	10
A.C. Electric Motor Standard Flange	11
Junction Elements for A.C. Electric Motor Standard Flange	13
D.C. Electric Motors Standard Performance	14
D.C. Electric Motors High Performance	26
Central Manifold ME	28
Central Manifold MR	36
Built-in Valve	37
Gear Pumps	47
Oil Tanks	48
Mounting position	55
Mounting Brackets	56
Modular Stackable Elements	57
Accessories	83

RE 51308-01/02.2012 Bosch Rexroth AG

Ordering Details for Compact Power Modules ME with A.C. Motor

01	02		03		04		05		06		07		08		09		10		11		12
ME	_	-	____	-	____	-	___/__(___)	-	____/____	-	___/__	-	__	-	_____	-	__/__/__/___	-	____/____/____	-	____/____

Family

01	Power module type	**ME**

Power module type of motor

02	Without motor	**0**
	With 3ph motor	**2**
	With 1ph motor	**3**

A.C. Electric motor

03	(See page 11-12)	

Junction Elements

04	The code of the Junction Element is showing in the page after the selected AC motor.	

Central Manifold with Pressure range Relief Valve + Request Setting of the Relief Valve in Bar

05	Select the required Central manifold with the required pressure range of the Relief valve and put the required setting in bar beetwen bracket.	

Built-in Valves

06	Insert the codes of the required valves following the number of the cavity in the Central Manifold (see page after the selected Central Manifold).	

Coil Model and Connector

07	In case of selection of Solenoid Built-in Valve choice the required coil Voltage and the required Connector. (See page 44)	

Gears pump

08	Select the required Gears pump. (See page 47)	

Oil Tank

09	Select the required Oil Tank.(See page 48-54)	

Mounting Position and Mounting Brackets

10	Select the required working position of the Power Module and the position of the therminal box and Oil Filler cap in case of mounting position V1. If needed select the Mounting Bracket. (See page 55-56)	

Modular Stackable Elements

11	If needed select the additional Modular Stackable Elements.	

Accessories

12	If needed select the additional Accessories.	

Example of Ordering Details for Compact Power Modules ME with A.C. Motor

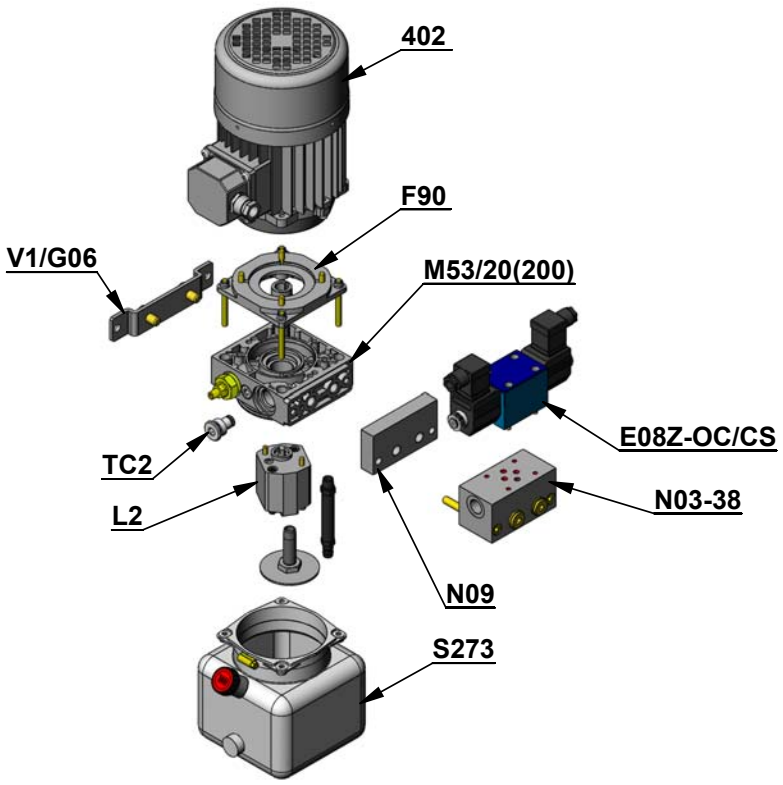

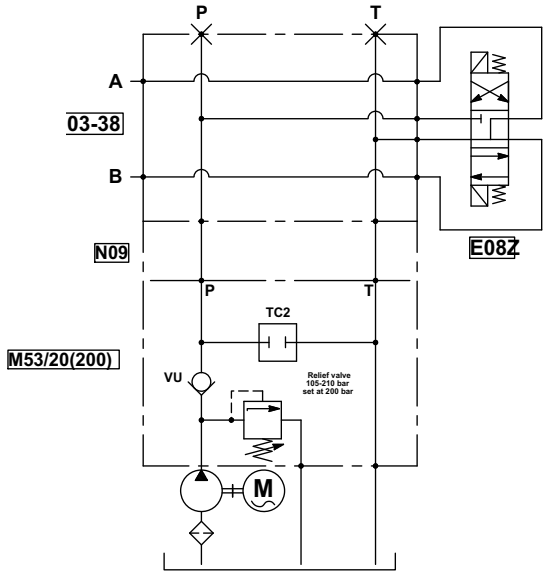

Ordering Details for Compact Power Modules with AC Motor

01	02		03		04		05		06		08		09		10		11
ME	**2**	**-**	**402**	**-**	**F90**	**-**	**M53/20(200)**	**-**	**TC2**	**-**	**L2**	**-**	**S273**	**-**	**V1/G06**	**-**	**N09/N03-38/ E08Z-OC/CS**
Power Module Type	Power Module Type of Motor		AC Electric motor		Junction Element		Central Manifold with Pressure range Relief Valve + Request Setting of the Relief Valve in Bar beetwen bracket		Built-in Valves		Gears pump		Oil Tank		Mounting Position and Mounting Brackets		Modular Stackable Elements Coil Voltage Connector

Ordering Details for Compact Power Modules ME with D.C. Motor

01	02		03		04		05		06		07		08		09		10		11		12		13		14
ME	_	-	____	-	_	-	_	-	____	-	___/__(___)	-	____/____	-	___/__	-	__	-	_____	-	__/__/__/___	-	____/____/____	-	____/____

Family

01	Power module type	**ME**

Power module type of motor

02	With DC motor	**1**

D.C. Electric motor

03	Select the required DC motors. (See page 14-27)	

Relay

04	The available relays are shown in the page after the selected DC motor.	

Plastic Protection

05	The possibility to assemble the plastic protection is shown in the page after the selected DC motor.	

Junction Elements

06	The code of the Junction Element is showing in the page after the selected DC motor.	

Central Manifold with Pressure range Relief Valve + Request Setting of the Relief Valve in Bar

07	Select the required Central manifold with the required pressure range of the Relief valve and put the required setting in bar beetwen bracket.	

Built-in Valves

08	Insert the codes of the required valves following the number of the cavity in the Central Manifold. (see page after the selected Central Manifold)	

Coil Model and Connector

09	In case of selection of Solenoid Built-in Valve choice the required coil Voltage and the required Connector. (See page 44)	

Gears pump

10	Select the required gears pump. (See page 47)	

Oil Tank

11	Select the required Oil Tank. (See page 48-54)	

Mounting Position and Mounting Brackets

12	Select the required working position of the Power Module and the position of Relay and Oil Filler cap in case of mounting position V1. If needed select the Mounting Bracket. (See page 55-56)	

Modular Stackable Elements

13	If needed select the additional Modular Stackable Elements	

Accessories

14	If needed select the additional Accessories	

Example of Ordering Details for Compact Power Modules ME with D.C. Motor

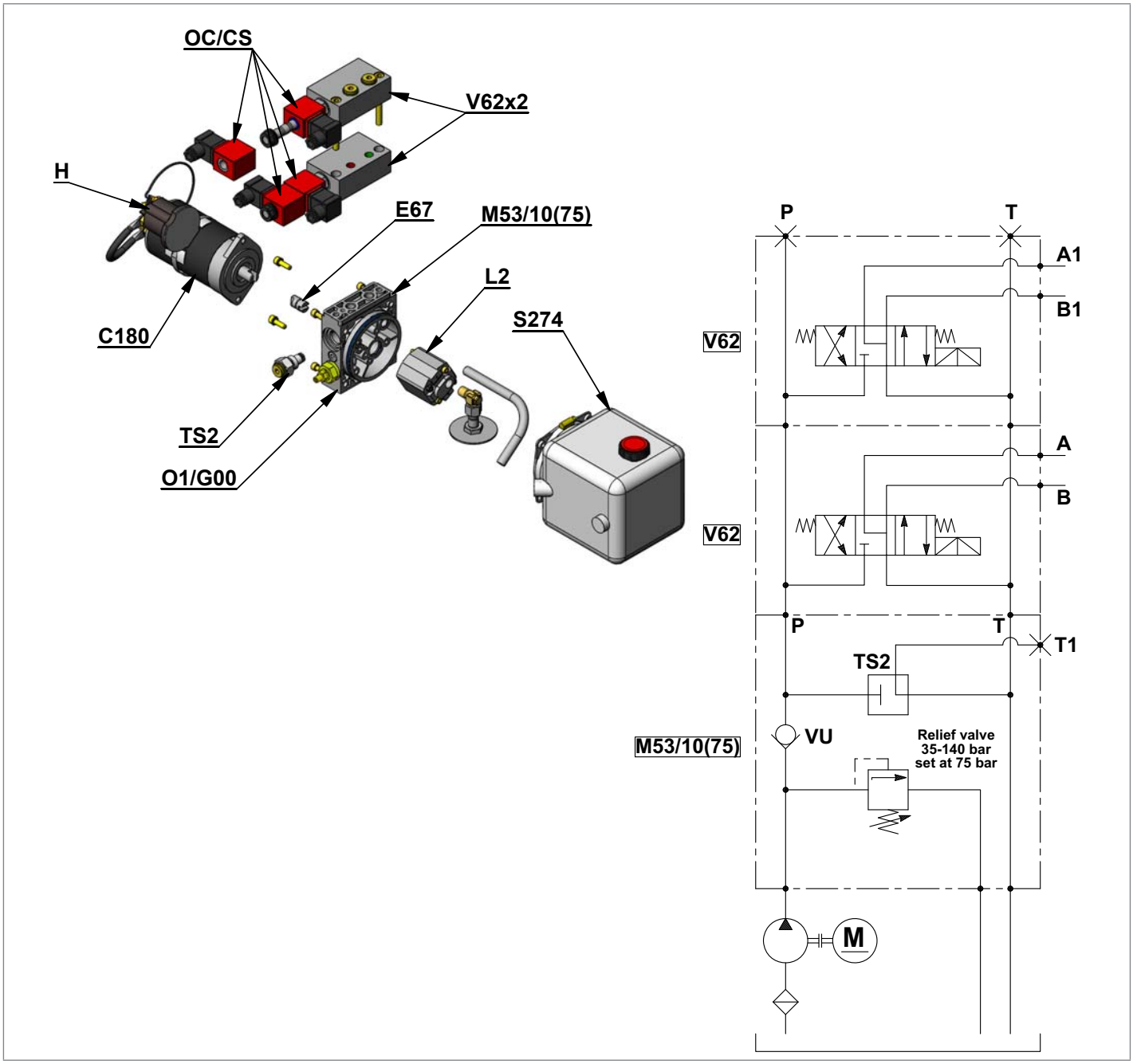

Ordering Details for Compact Power Modules with AC Motor

01	02		03		04		06		07		08		10		11		12		13
ME	**1**	-	**C180**	-	**H**	-	**E67**	-	**M53/10(75)**	-	**TS2**	-	**L2**	-	**S274**	-	**01/G00**	-	**V62x2-OC/CS**
Power Module Type	Power Module Type of Motor		DC Electric motor		Relay		Junction Element		Central Manifold with Pressure range Relief Valve + Request Setting of the Relief Valve in Bar beetwen bracket		Built-in Valves		Gears pump		Oil Tank		Mounting Position and Mounting Brackets		Modular Stackable Elements Coil Voltage Connector

Ordering Details for Compact Power Modules MR (reversible pump)

01	02		03		04		05		06		07		08
MR	_	-	____	-	____	-	___/__(___)	-	__	-	_____	-	__/__/___

Family

01	Power module type	**MR**

Power module type of motor

02	Without motor	**0**
	With DC motor	**1**
	With AC 3ph motor	**2**
	With AC 1ph motor	**3**

Electric motor

03	Select the required DC motors. (See pages 14-21) Or required AC motors. (See pages 11-12)	

Junction Elements

04	The code of the Junction Element is showing in the page after the selected motor.	

Central Manifold with Pressure range Relief Valve + Request Setting of the Relief Valve in bar

05	Select the required Central manifold with the required pressure range of the Relief valve and put the required setting in bar beetwen bracket.	

Gears pump

06	Select the required gears pump (See page 47)	

Oil Tank

07	Select the required Oil Tank. (See pages 48-54)	

Mounting Position and Mounting Brackets

08	Select the required working position of the Power Module and the position of Oil Filler cap in case of mounting position V1. If needed select the Mounting Bracket. (See pages 55-56)	

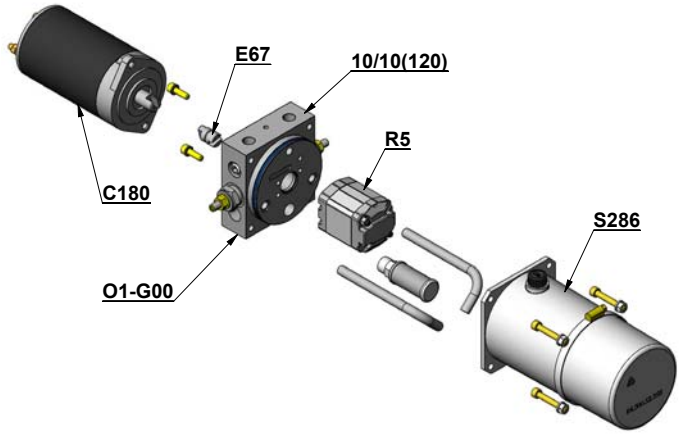

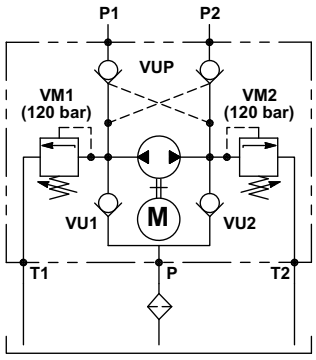

Ordering Details for Compact Power Modules MR

01	02		03		04		05		06		07		08
MR	**1**	-	**C180**	-	**E67**	-	**10 / 10 (120)**	-	**R5**	-	**S286**	-	**O1-G00**
Power Module Type	Power Module Type of Motor		AC Electric motor		Junction Element		Central Manifold with Pressure range Relief Valve + Request Setting of the Relief Valve in Bar beetwen bracket		Reversible Gears pump		Oil Tank		Mounting Position and Mounting Brackets

General Technical Data for Compact Power Module ME and MR series

Through the years DCOC has developed a highly evolved modular system resulting in powerful, flexible and cost effective power pack range, identified as **"compact power modules"**. In its easier configuration, a "compact power module" is an assembly of electric motor, central manifold with valves, pump, oil tank and a few connection elements. The central manifold, with its built-in valves, allows to achieve a large variety of hydraulic control circuits. If more complex circuits are needed, modular integrated blocks can be added by flange mounting, or interfacing, to the central manifold to extend its capabilities.

Typical applications
Passenger lift
Fork lift
Car and motorcycle lift
Lift table
Dumper
Tail gate
Scissor lift
Gangway and davits for boats
Material handling
Foods machinery

Power module selection
Choose the circuit which meets your application requirements.
Take note of all dimensions resulting from the basic components chosen for your application.

Note
dimensions may vary slightly and should be confirmed by DCOC, if the assembly is to be installed in a space with narrow clearance.

The tank capacity and the tank dimensions need to be large enough to assure proper pump suction: there must always be a reserve of oil in the tank when all cylinders are fully extended and avoid overflow when cylinders are fully retracted.
The tank must be evaluated also for best separation of air from oil, and for settling down oil contamination. It should be placed in a space with, at least, natural ventilation and it should permit enough heat dissipation to prevent high fluid temperature.
Select the electric motor by evaluating the power needed and the motor compliance with the heat developed during the expected run time (or "duty cycle").

Hydraulic fluid for compact power module
Mineral oil based hydraulic fluids suitable for hydraulic systems can be used; they should have physical lubricating and chemical properties as specified by:
MINERAL OIL BASED HYDRAULIC FLUIDS HL
(DIN 51524 part 1)
MINERAL OIL BASED HYDRAULIC FLUIDS HL P
(DIN 51524 part 2)
For use of environmentally friendly fluids please consult DCOC.

Fluid viscosity, temperature range of the operating fluid, ambient temperature
The fluid viscosity should remain within the range 10 to 300 cSt (centistokes); recommended 15 to 120 cSt.
Permissive cold start viscosity is maximum 2000 cSt.
The fluid temperature should remain within the range -15°C and 80°C (5°F and 176°F).

Note
For compact power module with plastic tank the fluid temperature should remain within the range -15°C and 70°C (5°F and 158°F).
Ambient temperature -15°C +40°C (5°F and 104°F).

Fluid cleanliness requirements and maintenance
We recommend a cleanliness of the operating fluid according to ISO 4406 Class 20/18/15 or cleaner.
All components of the hydraulic circuit , including hoses and actuators, must be flushed and cleaned before assembling, because the compact power module has a suction filter only.
The hydraulic fluid should be replaced after the first 50 hours, and then every 1000 hours, or, at least, once a year.

Power module installation
The mounting position (is basically un-restricted; just avoid installations that could compromise the pump suction, it is recommended to support the power module on vibration dampening blocks when the mounting structure is expected to vibrate.

Wiring and starting-up
The wiring between battery and electric motor should be selected in order to avoid excessive voltage drop (recommended less than 1 V).
It is strictly forbidden to allow the backwards rotation of the pump even at the first starting: to prevent reverse

rotation, the wiring polarities must be correctly connected (except for the reversible pumps).
Caution: when energized, the surface temperature of the electric motor could reach temperature levels of 60-80°C (140-176°F): care should be taken to avoid any accidental contact of people with the motor surface.

A.C. motors
The tolerances on the nominal voltage are:
Single phase motor: 230V +/-5% -
Three phase motor: 230-400V +/-10%.
Protection degree : IP54 (protection against dust and water splash).
Insulation class: F (155°C) (311°F).
All motors are aluminum alloy die cast without painting.

D.C. Motors
DCOC has a wide range of D.C. motors. In the following pages you will find a selection of our standard range.
For further information about our complete range please contact our Sales department.
Some motors Ø80 have reversible rotation (see the table) and are suitable for application in CPM MR series.
All the others motors shown have clockwise rotation suitable for driving our counter clockwise gear pumps.
For each motor a diagram is shown that enables the customer to select the right pump displacement needed for the required flow and working pressure.
To be sure of selecting the best electric motor for the application, also the duty cycle has to be verified.
Following are the definitions of the type of duty cycles:
S2 = Short time duty cycle: indicate the number of minutes the motor can operate before reaching the maximum allowable temperature. After this time the motor must cool down until the ambient temperature is reached.
S3 = Intermittent duty cycle: indicate the maximum time percentage (%) based on 10 minute period within the motor can run until reaching the maximum allowable temperature. For example an S3 value of 15% = 1,5 minutes running time every 10 minutes period. For 8,5 minutes the motor is switched-off.
The S2 and S3 values are related to the current draw. On the label of motor are indicated the S2 and S3 values referred to the nominal power of the motor.
To check the S2 or S3 value at different conditions is necessary to find the value of current in the motor-pumps diagram and related it with the represented list.
All the diagrams motor-pumps are obtained at the nominal voltage of 12 or 24 Volt using fluid ISO VG 46 at 20-30°C (68-86°F).

Central manifolds
All the Central Manifolds shown in the catalogue are made in die cast aluminium alloy except the manifold code 10 for CPM MR series that is made by extruded bar. The validation of the Central Manifolds follows a life-test with 250 bar (625 psi) pulsed pressure repeated for 300.000 cycles.

Built-in valves
A wide range of cartridge valves and special plugs is available to be assembled in our Central Manifolds. The cartridge valves shown are designed for use in our Compact Power Module and are manufactured using steel with high mechanical strength. Surface treatments protect the exposed parts to the external environment. Standard seals are NBR (BUNA-N) with backup rings in PTFE. The cartridge valves with “leak proof seat design” have an average leakage of 10-15 drops/minute (< 1 cm^3/minute 0.06 in^3/min.) at the maximum pressure using fluid ISO VG46 at 40°C (104°F).
The validation of the cartridge valves follows a life-test at pulsed maximum pressure (indicated for each valve) repeated for 500.000 cycles.
All the solenoid cartridge valves are fitted with protective O-Rings installed between the pole tube and the coil. These O-Rings protect the internal parts from condensation and contaminants , which could cause malfunction.
All the solenoid cartridge valves except the 2/2 VE1 series are designed for operating in D.C..
Power supply in A.C. requires a connector with bridge rectifier included. All the data in the solenoid cartridge valves data sheet are obtained with stabilized coil operating temperature and voltage at -10% of the nominal value.

External gear pumps
DCOC offers a wide range of External Gear Pumps to cover different kind of applications. The standard version are suitable for the biggest part of applications. All the pumps are pressure compensated to guarantee the best efficiency.

Oil tanks
In this catalogue you will find a wide selection of steel and plastic tanks available as a standard product. If a special tank is required please contact our Sales Department. Steel tanks have Black paint finish and are suitable for operating temperature range -15°C / +80°C (5°F / 176°F). Plastic tanks are obtained in one piece in order to avoid welded parts that are weak points at extreme temperature and vibrations. Plastic tanks are suitable for operating temperature range -15°C / +70°C (5°F / 158°F).

Note
even if the plastic tank mounting system is designed to avoid oil leakage the tank must be securely anchored when fitted in mobile equipment and when subject to shocks and heavy vibrations. Please check that the anchorages do not stress or deform the tank.

Modular stackable elements
Our modular system offers a wide range of standardised elements. They are divided in two main series:
Modular Elements “N” series: Modular blocks for different mounting position with mechanical valve or interface for CETOP valves to create parallel or series circuits.
Modular Elements “V” series: Modular blocks that incorporate solenoid operated cartridge valves 2,3,4 way.
All the Modular Elements are made in extruded aluminum alloy AL 2011 (AlCu5.5Pb0.4Bi0.4 UNI 9002/5). In the catalogue you will find a selection of the main used models.
Note: To reduce the complexity of the system and optimize the available space, special Modular Elements can be designed and manufactured following the customers needs. In this case please contact our Sales Department.

European machine directive 2006/42/CE
According to the Machine Directive2006/42/CE, a complete power module, as described in paragraph 15 and made available to the European market, enters into the definition of “partly completed machinery”.
Instead, the power module sub-assemblies (motor, pump, reservoir, central manifold,...), when not assembled into a complete power pack, are considered “components” which can be employed in a “machinery” or a “partly completed machinery”. In this case, the DCOC components and sub-assemblies must be fitted in compliance with all the relevant technical data sheet applicable to the product, and shall not be operated, adjusted or disassembled before the complete machinery where they are incorporated has been declared to be in compliance with the Machine Directive 2006/42/CE.

Note
All the components shown in the catalogue ARE NOT suitable for use in potentially explosive atmosphere.

Technical information
Below you will find the most common equations used in hydraulics:

	Common Units	Symbols	Equations
Flow	l/min	Q	$Q = \frac{D \times n}{1000} \times 0{,}95$
Operating pressure	bar	P	$P = \frac{F}{0{,}1 \times A}$
Internal diameter hydraulic cylinder	mm	d	–
Area of hydraulic cylinder	mm^2	A	$A = \frac{\Pi \times d^2}{4}$
Piston force	N	F	–
Drive shaft	rev/min	n	–
Power requirement for motor	kW	N	$N = \frac{P \times Q}{612}$
Pump displacement	cm^3/rev	D	–
Torque requirement	Nm	M	$M = \frac{D \times P}{62{,}8 \times 0{,}87}$

Compact Power Module Type

ME

Smallest overall dimensions.

DC motors up to 2200 W (2,95 hp).

AC motors up to 1100 W (1,48 hp).

Pump displacement up to 1,5 cm3 (0,09 inch3).

Pressure up to 250 bar (3626 psi).

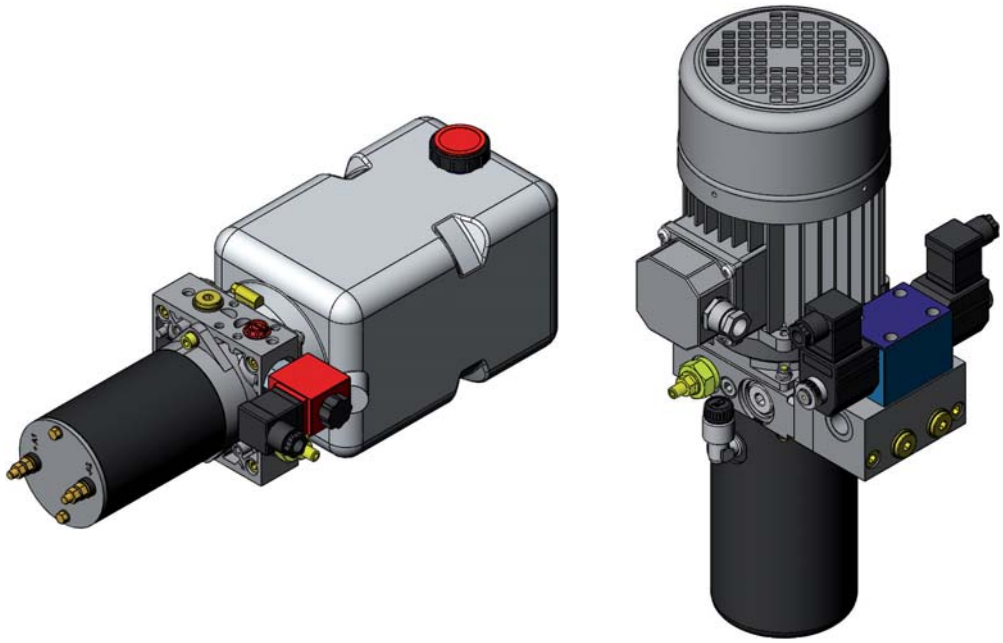

Reversible Type **MR series**

Smallest overall dimensions.

DC motors up to 800 W (1,1 hp).

AC motors up to 750 W (1,0 hp).

Pump displacement up to 1,5 cm3 (0,09 inch3).

Pressure up to 250 bar (3626 psi).

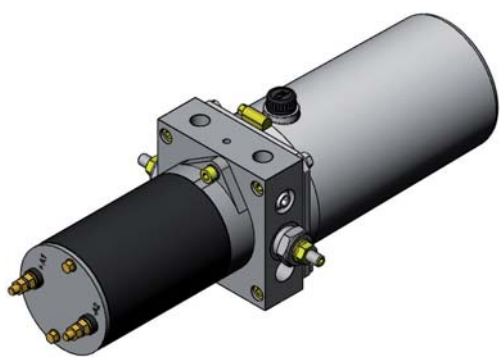

Bosch Rexroth AG RE 18306-01/02.2013

988

A.C. Electric Motor Standard Flange

Standard A.C. Motors in B14 form.

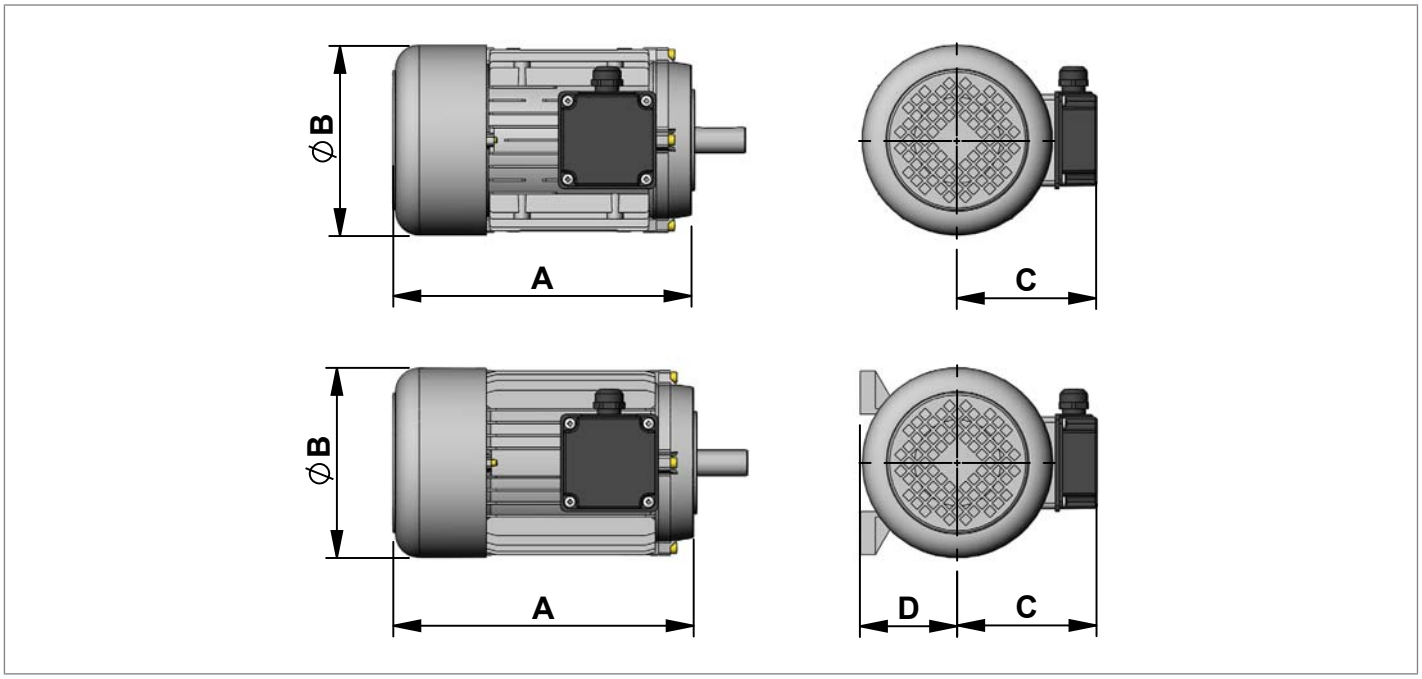

2 Poles Three Phase

Current Motors 230/400V 50Hz 278-/480V 60Hz Form B14 Protection IP54 (2900 rpm at 50Hz)

Code	Type	Material Number	Power (kW)	Power (hp)	Size IEC	Duty Cycle	A mm (inch)	ØB mm (inch)	C mm (inch)	D mm (inch)	Efficiency Classe
204	C162208000	R932000450	0,75	1	80	S3 60%	237 (9,33)	156 (6,14)	123 (4,84)	80 (3,15)	IE1
205	C162209000	R932000451	1,1	1,1	80	S3 60%	237 (9,33)	156 (6,14)	123 (4,84)	80 (3,15)	IE1

4 Poles Three Phase

Current Motors 230/400V 50Hz 278-/480V 60Hz Form B14 Protection IP54 (1450 rpm at 50Hz)

Code	Type	Material Number	Power (kW)	Power (hp)	Size IEC	Duty Cycle	A mm (inch)	ØB mm (inch)	C mm (inch)	D mm (inch)	Efficiency Classe
400	C1622S1107	R932000308	0,09	0,12	56	S1	169 (6,65)	110 (4,33)	95 (3,74)	56 (2,20)	-
401	C162266000	R932000490	0,18	0,25	63	S1	189 (7,44)	124 (4,88)	104 (4,09)	63 (2,48)	-
402	C1622670DR	R932008027	0,25	0,35	71	S1	218 (8,58)	140 (5,51)	109 (4,29)	71 (2,79)	-
403	C1622680DR	R932006105	0,37	0,5	71	S1	212 (8,35)	140 (5,51)	113 (4,45)	71 (2,79)	-
404	C1622150DR	R932006106	0,55	0,75	80	S1	250 (9,84)	156 (6,14)	125 (4,92)	80 (3,15)	-
405	C1622160DR	R932006107	0,75	1	80	S2 60MIN.	250 (9,84)	156 (6,14)	125 (4,92)	80 (3,15)	IE1

Dimensions [mm (inches)]

Standard A.C. Motors in B14 form.

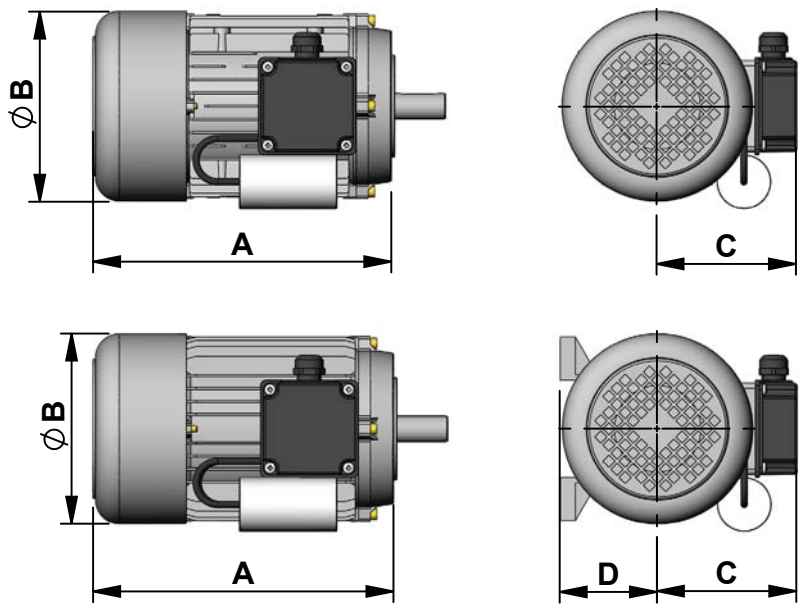

On request motors in B34 form are avaible. In this cases, please put “B34” after the code of the motor when filling in the description. Example “408MB34”.

2 Poles Single Phase

Current Motors 230V 50Hz Form B14 Protection IP54 (2900 rpm at 50Hz)

Code	Type	Material Number	Power (kW)	Power (hp)	Size IEC	Duty Cycle	A mm (inch)	ØB mm (inch)	C mm (inch)	D mm (inch)
204M	C1622S1264	R932000361	0,75	1	80	S1	237 (9,33)	156 (6,14)	123 (4,84)	80 (3,15)
205M	C1622S1342	R932000400	1,1	1,5	80	S1	237 (9,33)	156 (6,14)	123 (4,84)	80 (3,15)

4 Poles Single Phase

Current Motors 230V 50Hz Form B14 Protection IP54 (1450 rpm at 50Hz)

Code	Type	Material Number	Power (kW)	Power (hp)	Size IEC	Duty Cycle	A mm (inch)	ØB mm (inch)	C mm (inch)	D mm (inch)
401M	C162270000	R932000495	0,18	0,25	63	S1	189 (7,44)	124 (4,88)	104 (4,09)	63 (2,48)
402M	C162271000	R932000496	0,25	0,35	71	S1	218 (8,58)	140 (5,51)	109 (4,29)	71 (2,80)
403M	C162272000	R932000497	0,37	0,5	71	S1	212 (8,35)	140 (5,51)	113 (4,45)	71 (2,80)
404M	C162239000	R932000471	0,55	0,75	80	S1	250 (9,84)	156 (6,14)	125 (4,92)	80 (3,15)
405M	C162240000	R932000472	0,75	1	80	S1	250 (9,84)	156 (6,14)	125 (4,92)	80 (3,15)

Note
The electric motors with standard flange shown in this pages are delivered by different certified suppliers.
This means the indicated dimensions could change a little, depending on which manufacturer will be assembled.
On the CPM the choice of the manufacturer is based on our stock availability.

Junction Elements for A.C. Electric Motor Standard Flange

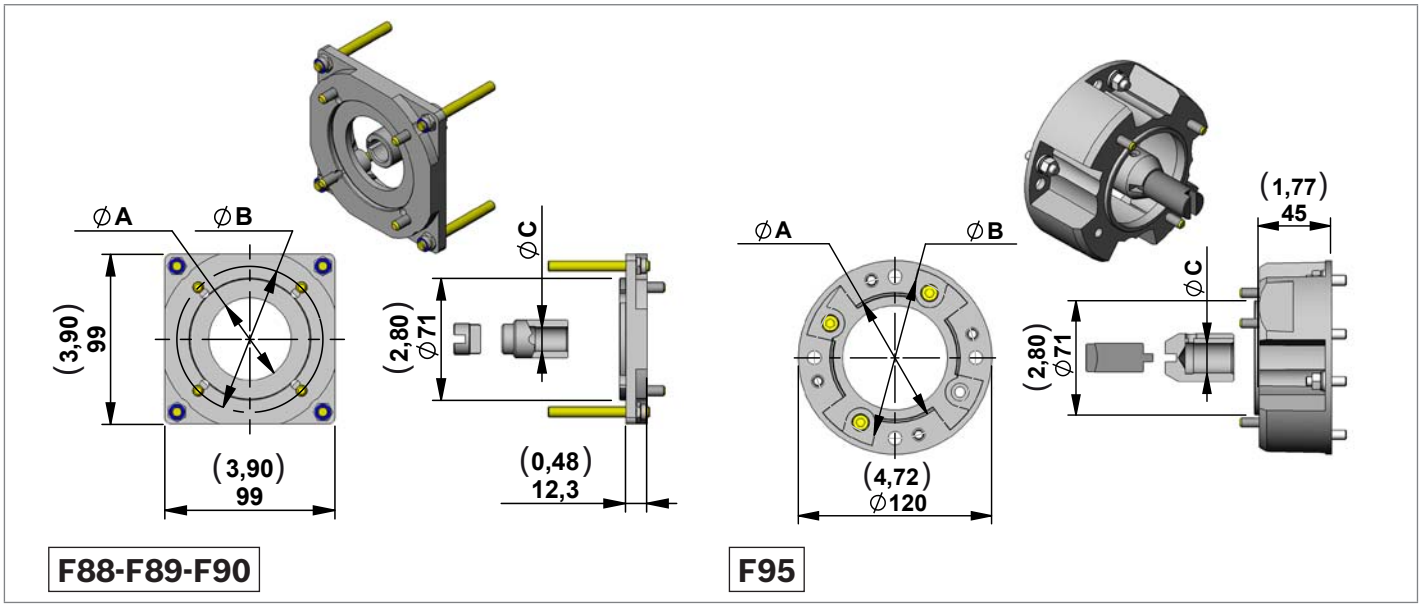

Junction Elements for manifolds ME - MR series (STD COUPLINGS)

Code	Motor Codes	Size IEC	A mm (inch)	B mm (inch)	C mm (inch)	H mm (inch)	Type	Material Number
F88	400	56	50 (1,97)	65 (2,56)	9 (0,35)	12,5 (0,49)	K01X3970TR097	R932002068
F89	401-401M	63	60 (2,36)	75 (2,95)	11 (0,43)	12,5 (0,49)	K01X3970TR098	R932002069
F90	402-403-402M-403M	71	70 (2,76)	85 (3,35)	14 (0,55)	12,5 (0,49)	K01X3970TR099	R932002070
F95	204-205-404-405 204M-205M-404M-405M	80	80 (3,15)	100 (3,94)	19 (0,75)	-	K01X3970TR100	R932002071

Note
The junction element F95 is not usable with manifold MR serie.

Dimensions [mm (inches)]

D.C. Electric Motors Standard Performance

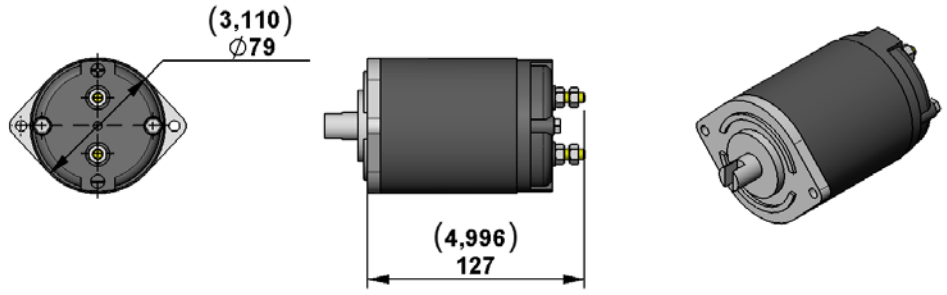

Code	Voltage (V)	Power (W)	Duty Cycle S3% S2 min.	Thermal Switch	UL Certified	Protection index	Direction of rotation	Type	Material Number
C177	12	150	10% 2,5min	NO	NO	IP 54	<->	C1620S1077	R932010751
C178	24	150	10% 2,5min	NO	NO	IP 54	<->	C1620S1078	R932010752

Electric Motor C177 (12V – 150W) Diagrams

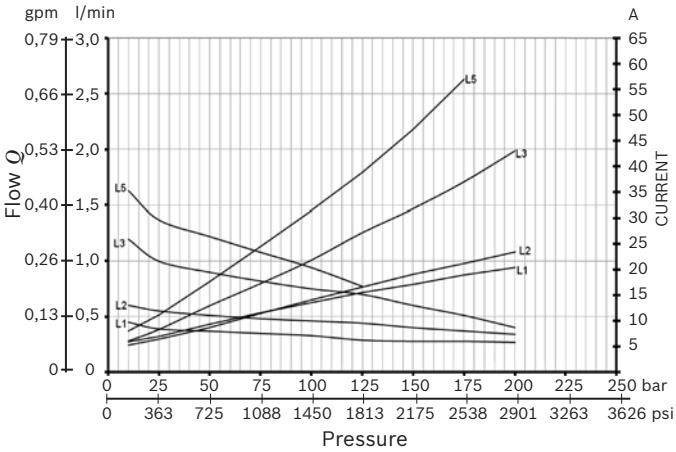

Electric Motor C178 (24V – 150W) Diagrams

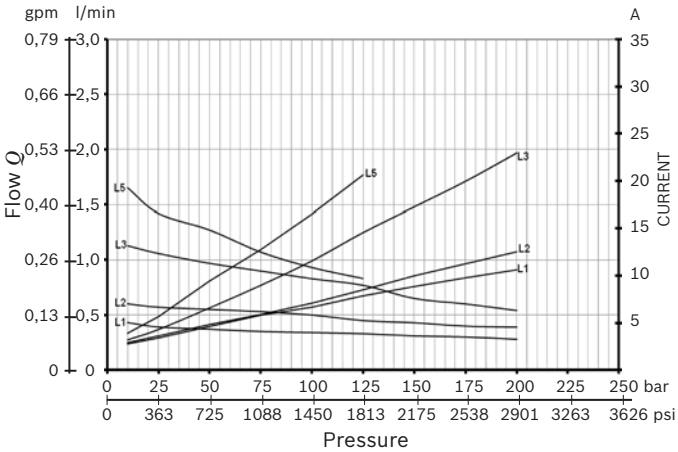

S2 - S3 performance

Amps	S2 (min.)	S3(%) (10 min.)
20	8	20%
30	4	8%
50	1,5	3%

S2 - S3 performance

Amps	S2 (min.)	S3(%) (10 min.)
10	4	10%
20	1,5	3%

Note
The values of the curves may change slightly depending on the brand / model of pump that is mounted.

Relay

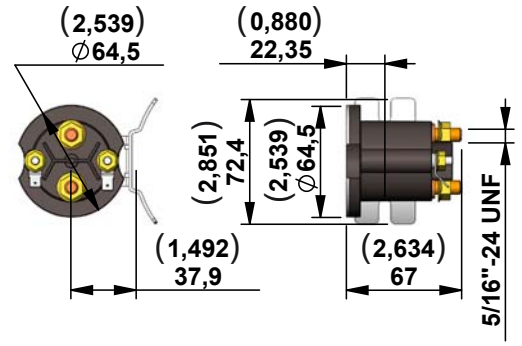

Starting Relay **Standard Performance**

Code	Voltage (V)	Nominal Current (A)	Short time Current (A)	Protection INDEX	UL Certified	Type	Material Number
A	Without Relay						
G	12	150	350	IP66	NO	C165534000	R932000692
H	24	150	350	IP66	NO	C165535000	R932000693

Kit Motor + Relay

Motor + Relay	Type	Material Number
C177+relay 12V STANDARD performance	K396812177PSF	R930051641
C178+relay 24V STANDARD performance	K396824178PSF	R930051629

Junction Elements for D.C. Electric Motor

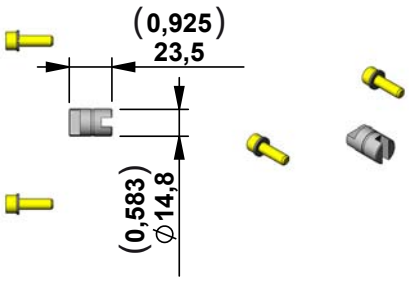

Junction Elements for manifolds **ME - MR** series

Code	Type	Material Number
E67	K01X3970TR095	R932002066

Dimensions [mm (inches)]

D.C. Electric Motors Standard Performance

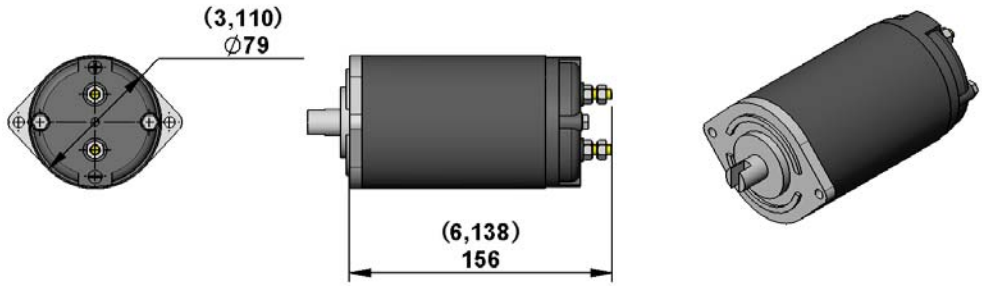

Code	Voltage (V)	Power (W)	Duty Cycle S3% S2 min.	Thermal Switch	UL Certified	Protection index	Direction of rotation	Type	Material Number
C179	12	500	10% 2,5min	NO	NO	IP 54	<->	C1620S1079	R932010753
C180	24	500	10% 2,5min	NO	NO	IP 54	<->	C1620S1080	R932010755

Electric Motor C179 (12V – 500W) Diagrams

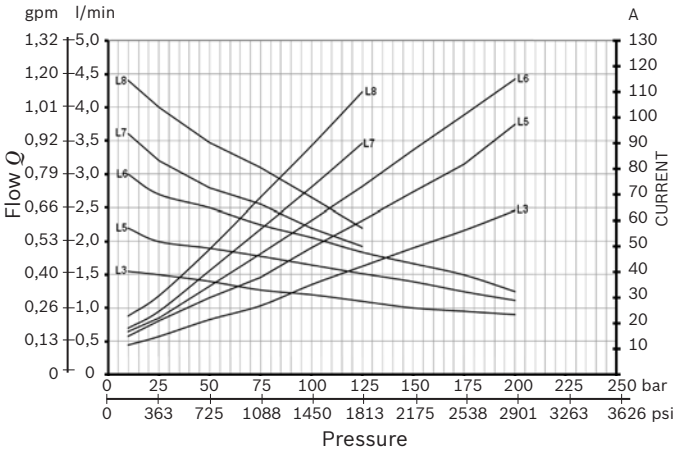

Electric Motor C180 (24V – 500W) Diagrams

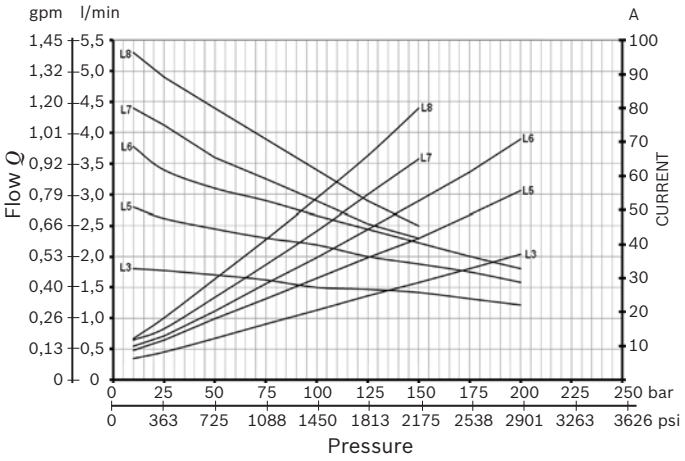

S2 - S3 performance

Amps	S2 (min.)	S3(%) (10 min.)
50	10	25 %
75	5	10 %
100	2	3 %

S2 - S3 performance

Amps	S2 (min.)	S3(%) (10 min.)
20	10	25 %
40	5	10 %
60	2	2 %

Note
The values of the curves may change slightly depending on the brand / model of pump that is mounted.

Relay

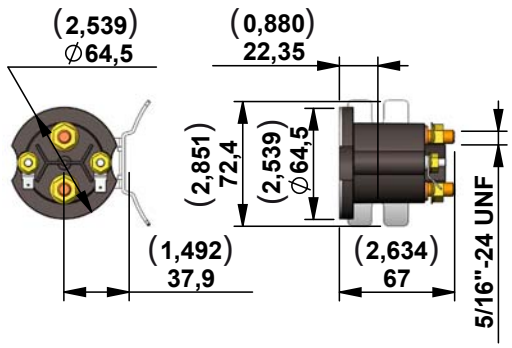

Starting Relay **Standard Performance**

Code	Voltage (V)	Nominal Current (A)	Short time Current (A)	Protection INDEX	UL Certified	Type	Material Number
A	Without Relay						
G	12	150	350	IP66	NO	C165534000	R932000692
H	24	150	350	IP66	NO	C165535000	R932000693

Kit Motor + Relay

Motor + Relay	Type	Material Number
C179+relay 12V STANDARD performance	K396812179PSF	R930051817
C180+relay 24V STANDARD performance	K396824180PSF	R930051820

Junction Elements for D.C. Electric Motor

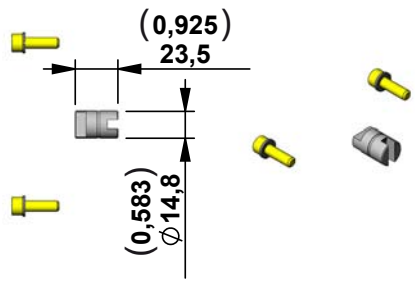

Junction Elements for manifolds **ME - MR** series

Code	Type	Material Number
E67	K01X3970TR095	R932002066

Dimensions [mm (inches)]

D.C. Electric Motors Standard Performance

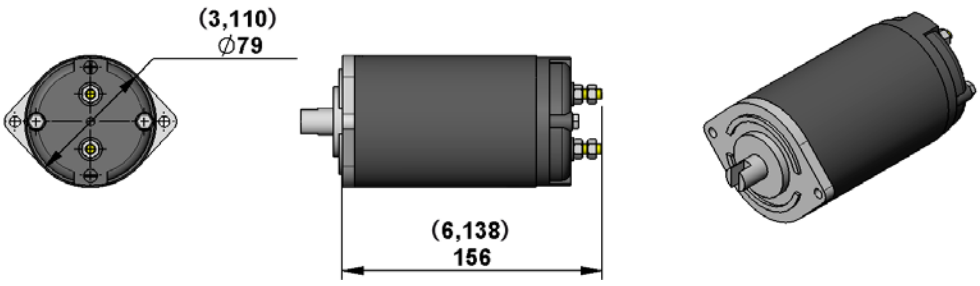

Code	Voltage (V)	Power (W)	Duty Cycle S3% S2 min.	Thermal Switch	UL Certified	Protection index	Direction of rotation	Type	Material Number
C181	12	800	8% 2,5min	NO	NO	IP 54	<->	C1620S1081	R932010754
C182	24	800	8% 2,5min	NO	NO	IP 54	<->	C1620S1082	R932010756

Electric Motor C181 (12V – 800W) Diagrams

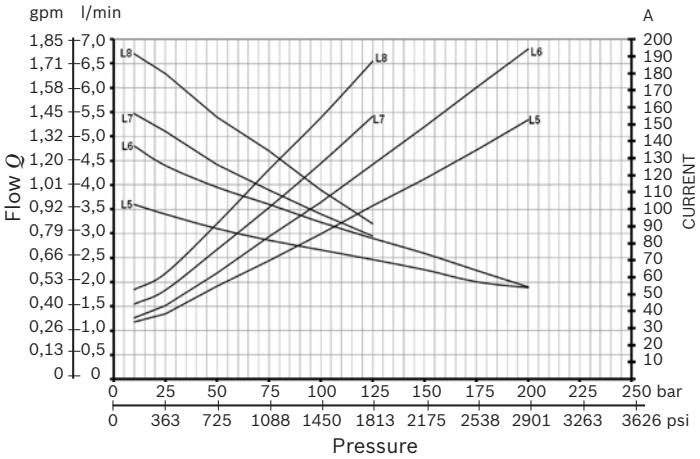

Electric Motor C182 (24V – 800W) Diagrams

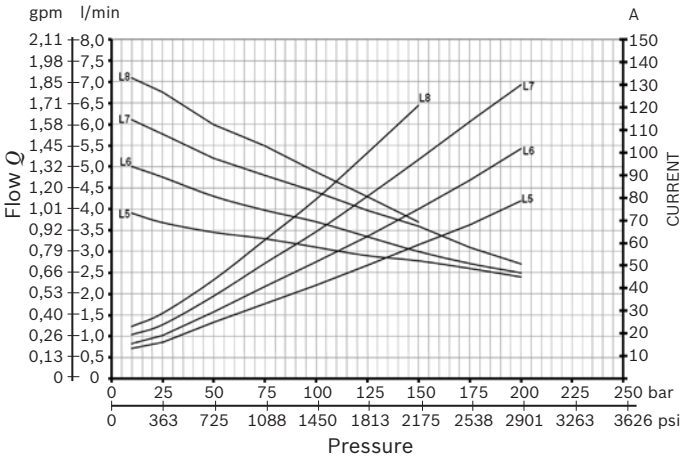

S2 - S3 performance

Amps	S2 (min.)	S3(%) (10 min.)
50	10	25 %
100	5	10 %
150	1,5	3 %

S2 - S3 performance

Amps	S2 (min.)	S3(%) (10 min.)
25	10	25 %
50	5	10 %
75	1,5	3 %

Note
The values of the curves may change slightly depending on the brand / model of pump that is mounted.

Relay

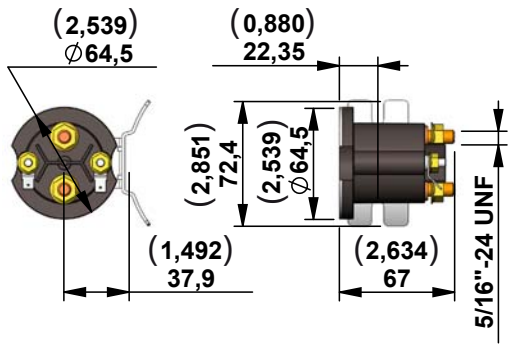

Starting Relay **Standard Performance**

Code	Voltage (V)	Nominal Current (A)	Short time Current (A)	Protection INDEX	UL Certified	Type	Material Number
A	Without Relay						
G	12	150	350	IP66	NO	C165534000	R932000692
H	24	150	350	IP66	NO	C165535000	R932000693

Kit Motor + Relay

Motor + Relay	Type	Material Number
C181+relay 12V STANDARD performance	K396812181PSF	R930051818
C182+relay 24V STANDARD performance	K396824182PSF	R930051821

Junction Elements for D.C. Electric Motor

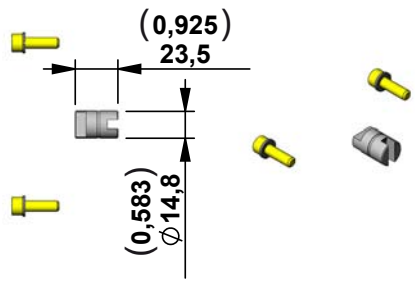

Junction Elements for manifolds **ME - MR** series

Code	Type	Material Number
E67	K01X3970TR095	R932002066

D.C. Electric Motors Standard Performance

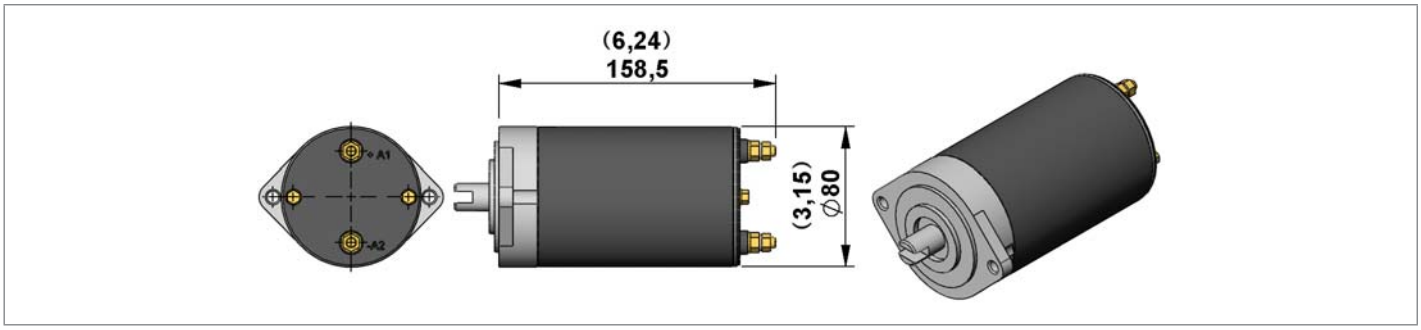

Code	Voltage (V)	Power (W)	Duty Cycle S3% S2 min.	Thermal Switch	UL Certified	Protection index	Direction of rotation	Type	Material Number
C67	12	800	9% 4min	NO	NO	IP 54	Reversible	C162066000	R932000264
C123	12	800	9% 4min	YES	NO	IP 54	Clockwise	C1620S1023	R932000220
C94	24	800	8% 2,5min	NO	NO	IP 54	Reversible	C162093000	R932000274
C122	24	800	10% 4min	YES	NO	IP 54	Clockwise	C1620S1022	R932000219

Electric Motor C67-C123 (12V – 800W) Diagrams

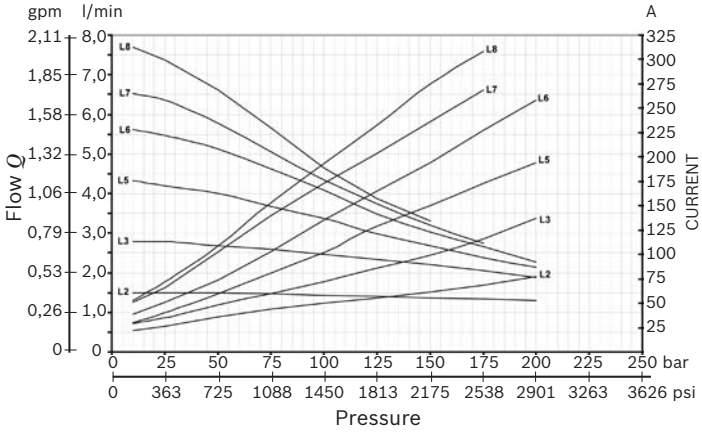

Electric Motor C94-C122 (24V – 800W) Diagrams

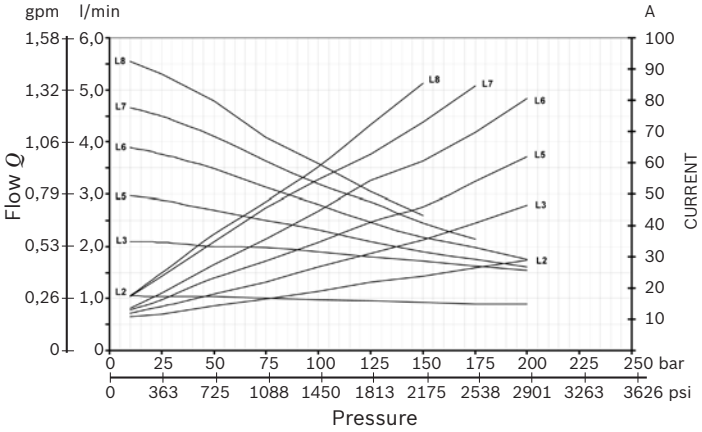

S2 - S3 performance

Amps	S2 (min.)	S3(%) (10 min.)
50	14	35 %
100	6	12 %
150	2	3 %

S2 - S3 performance

Amps	S2 (min.)	S3(%) (10 min.)
25	16	35 %
50	7	15 %
75	2	3 %

Note
The values of the curves may change slightly depending on the brand / model of pump that is mounted.

Relay

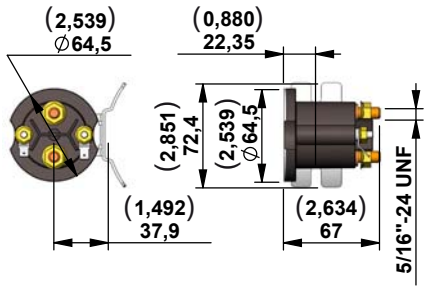

(Pict. 1)

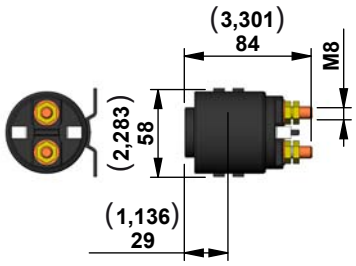

(Pict. 2)

Starting Relay **Standard Performance** (Pict. 1)

Code	Voltage (V)	Nominal Current (A)	Short time Current (A)	Protection INDEX	UL Certified	Type	Material Number
A	Without Relay						
G	12	150	350	IP66	NO	C165534000	R932000692
H	24	150	350	IP66	NO	C165535000	R932000693

Starting Relay **High Performance** (silver plate contact) (Pict. 2)

Code	Voltage (V)	Nominal Current (A)	Short time Current (A)	Protection INDEX	UL Certified	Type	Material Number
A	Without Relay						
C	12	150	350	IP54	NO	C165524000	R932000690
E	24	150	350	IP54	NO	C165525000	R932000691

Kit Motor + Relay

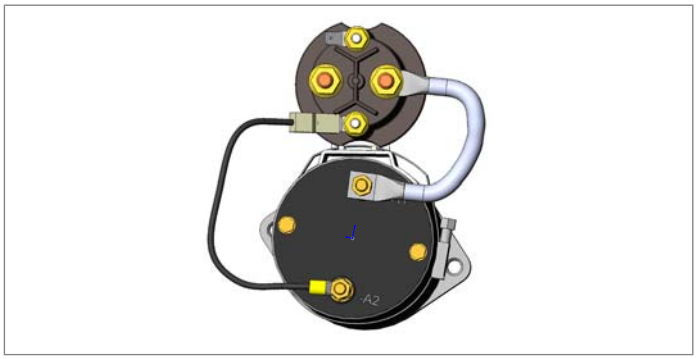

Motor + Relay	Type	Material Number
C67+relay 12V STANDARD performance	K39681267PSF	R932007536
C67+relay 12V HIGH performance	K39681267C	R930051643
C123+relay 12V STANDARD performance	K396812123PSF	R930051984
C123+relay 12V HIGH performance	K396812123C	R932002723
C94+relay 24V STANDARD performance	K39682494PSF	R932007938
C94+relay 24V HIGH performance	K39682494E	R932002821
C122+relay 24V STANDARD performance	K396824122PSF	R930051967
C122+relay 24V HIGH performance	K396824122E	R932007978

Junction Elements for D.C. Electric Motor

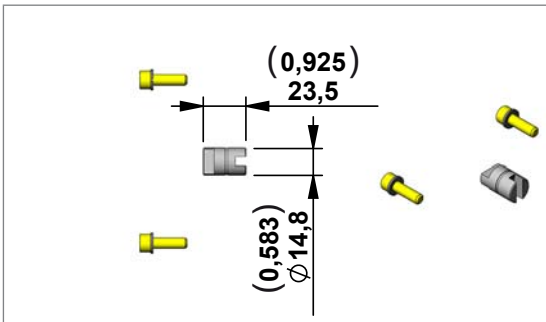

Junction Elements for manifolds **ME - MR** series

Code	Type	Material Number
E67	K01X3970TR095	R932002066

Dimensions [mm (inches)]

D.C. Electric Motors Standard Performance

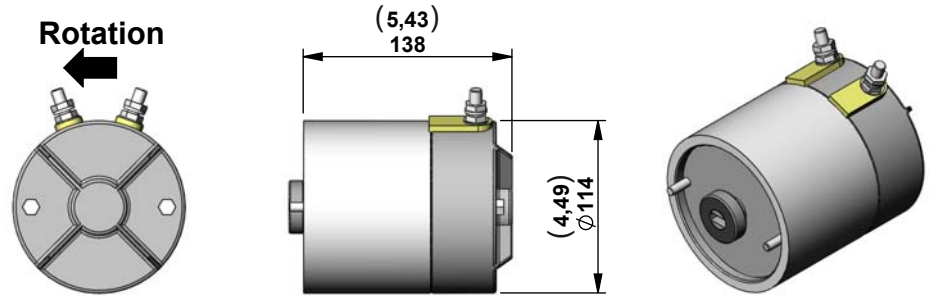

Code	Voltage (V)	Power (W)	Duty Cycle S3% S2 min.	Thermal Switch	UL Certified	Protection index	Type	Material Number
C172	24	1300	15% 6,5 min	NO	YES	IP 54	C1620S1072	R932009389

Electric Motor C172 (24V – 1300W) Diagrams

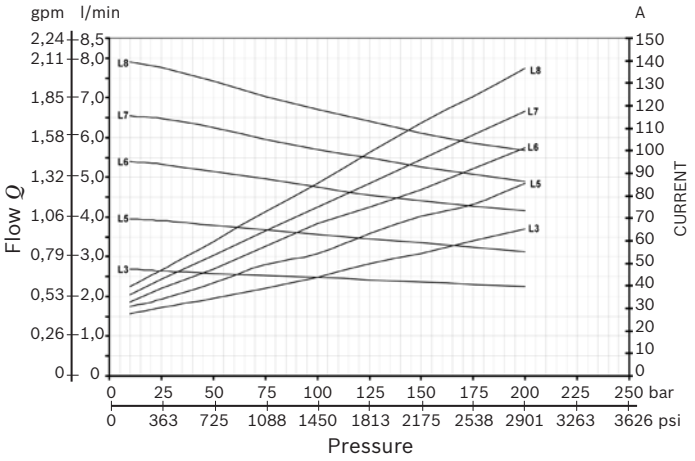

S2 - S3 performance

Amps	S2 (min.)	S3(%) (10 min.)
75	6	17%
100	4	11%
125	2,4	7,5%
150	1,5	5%
175	1	3,5%

Note
The values of the curves may change slightly depending on the brand / model of pump that is mounted.

Relay

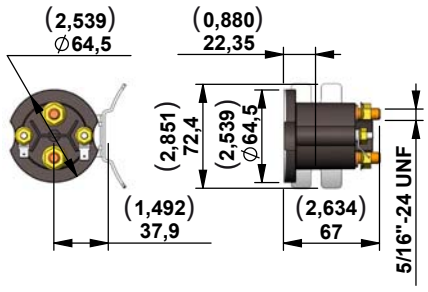

(Pict. 1)

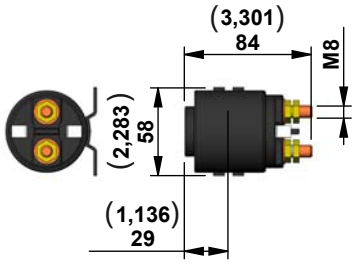

(Pict. 2)

Starting Relay **Standard Performance** (Pict. 1)

Code	Voltage (V)	Nominal Current (A)	Short time Current (A)	Protection INDEX	UL Certified	Type	Material Number
A	Without Relay						
H	24	150	350	IP66	NO	C165535000	R932000693
L	24	150	350	IP66	YES	C165540000	R932008749

Starting Relay **High Performance** (silver plate contact) (Pict. 2)

Code	Voltage (V)	Nominal Current (A)	Short time Current (A)	Protection INDEX	UL Certified	Type	Material Number
A	Without Relay						
E	24	150	350	IP54	NO	C165525000	R932000691

Kit Motor + Relay

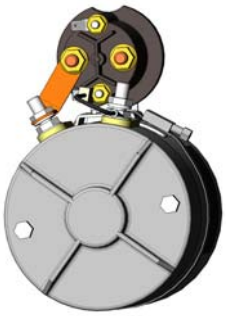

Motor + Relay	Type	Material Number
C172+relay 24V STANDARD performance	K396824172PSF	R930051612
C172+relay 24V STANDARD performance UL certified	K396824172PSFUL	R930051614
C172+relay 24V HIGH performance	K396824172EF	R930051617

Junction Elements for D.C. Electric Motor

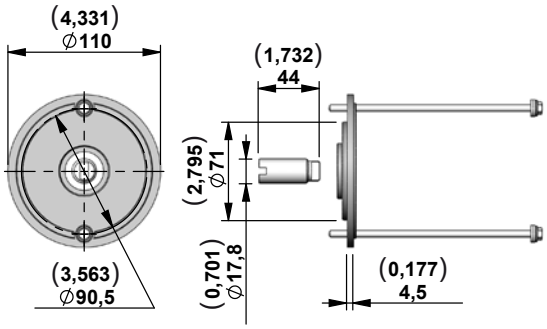

Junction Elements for manifolds **ME**

Code	Type	Material Number
E71	K01X3970TR109	R932009727

Note
Change the standard screws supplied with the motor with the screws of the junction element E71.

D.C. Electric Motors Standard Performance

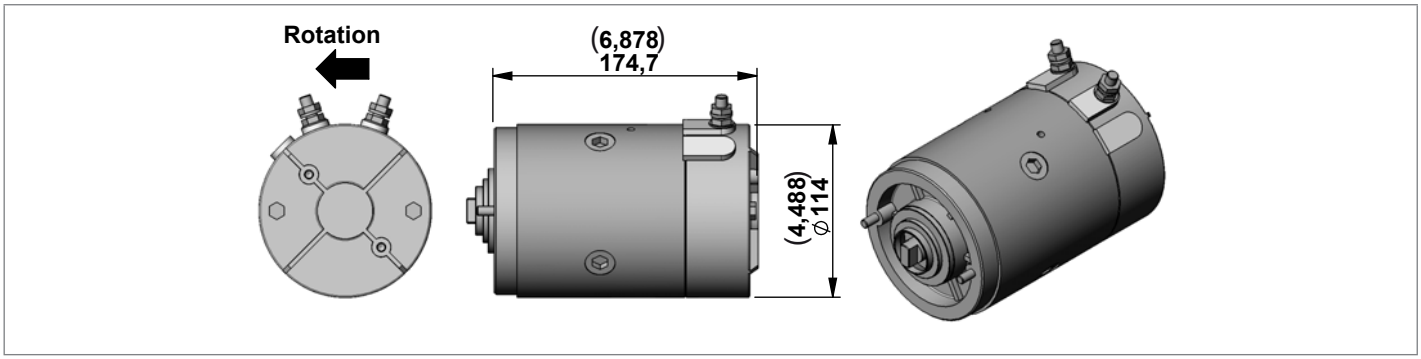

Code	Voltage (V)	Power (W)	Duty Cycle S3% S2 min.	Thermal Switch	UL Certified	Protection index	Type	Material Number
C190	12	1600	5% 2 min	no	yes	IP 54	C1620S1090	R930056392
C191	12	1600	5% 2 min	yes	yes	IP 54	C1620S1091	R930056391
C192	24	2200	5% 2 min	no	yes	IP 54	C1620S1092	R930056390
C193	24	2200	5% 2 min	yes	yes	IP 54	C1620S1093	R930056389

Electric Motor C190-191 (12V – 1600W) Diagrams

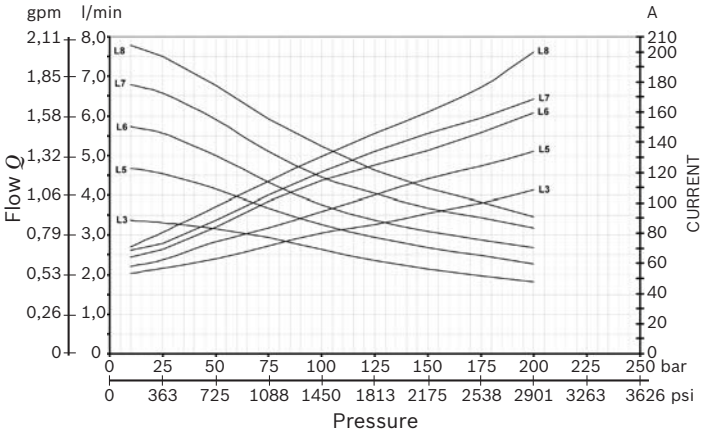

Electric Motor C192 - C193 (24V – 2200W) Diagrams

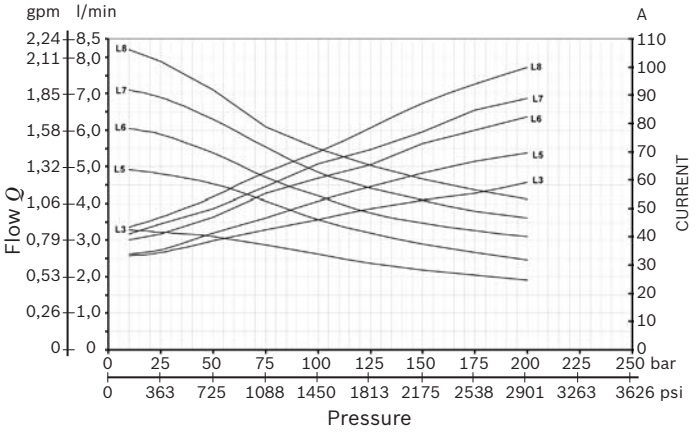

S2 - S3 performance

Amps	S2 (min.)	S3(%) (10 min.)
150	5,5	12%
200	3,5	8%
250	2	6%
300	1,5	4%
350	1	3%

S2 - S3 performance

Amps	S2 (min.)	S3(%) (10 min.)
75	5	12%
100	3	7%
125	1,8	5%
150	1	4%
175	0,7	2,5%

Note
The values of the curves may change slightly depending on the brand / model of pump that is mounted.

Relay

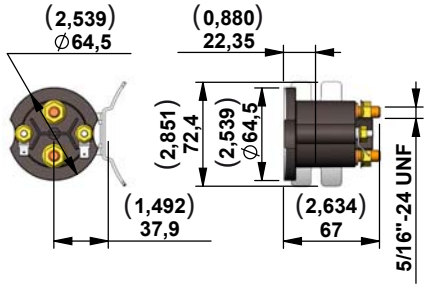

(Pict. 1)

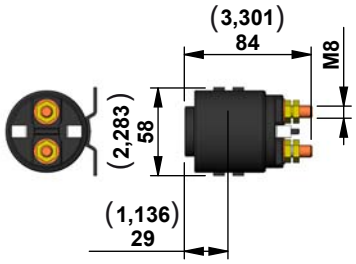

(Pict. 2)

Starting Relay **Standard Performance** (Pict. 1)

Code	Voltage (V)	Nominal Current (A)	Short time Current (A)	Protection INDEX	UL Certified	Type	Material Number
A	Without Relay						
G	24	150	350	IP66	NO	C165534000	R932000692
H	24	150	350	IP66	NO	C165535000	R932000693
L	24	150	350	IP66	YES	C165540000	R932008749

Starting Relay **High Performance** (silver plate contact) (Pict. 2)

Code	Voltage (V)	Nominal Current (A)	Short time Current (A)	Protection INDEX	UL Certified	Type	Material Number
A	Without Relay						
C	24	150	350	IP54	NO	C165524000	R932000690
E	24	150	350	IP54	NO	C165525000	R932000691

Kit Motor + Relay

Motor + Relay	Type	Material Number
C190+relay 12V STANDARD performance	K396812190PSCUF	R930034093
C190+relay 12V HIGH performance	K396812190C	R930034094
C191+relay 12V STANDARD performance	K396812191PSCUF	R930034095
C191+relay 12V HIGH performance	K396812191C	R930034097
C192+relay 24V STANDARD performance	K396824192PSCUF	R930035261
C192+relay 24V STANDARD performance UL certified	K396824192PSUL	R930034098
C192+relay 24V HIGH performance	K396824192E	R930034101
C193+relay 24V STANDARD performance	K396824193PSCUF	R930034102
C193+relay 24V STANDARD performance UL certified	K396824193PSUL	R930035112
C193+relay 24V HIGH performance	K396824193E	R930035252

Plastic Protection

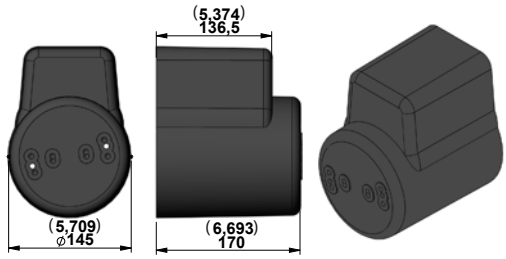

Code		Type	Material Number
0	Without Protection	-	-
1	With Protection	K229701000	R932002246

Kit for assembly plastic protection

Type	Material Number
K01K211565000	R930059147

Junction Elements for D.C. Electric Motor

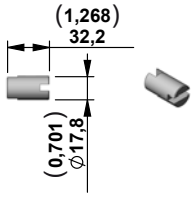

Junction Elements for manifolds **ME** series

Code	Type	Material Number
E31	K01K3970TR008	R932001907

D.C. Electric Motors High Performance

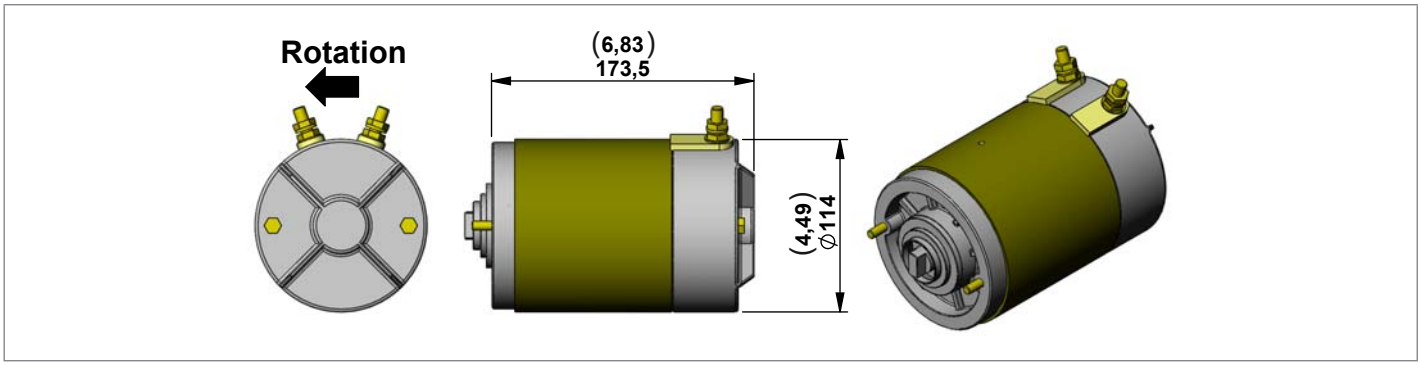

Code	Voltage (V)	Power (W)	Duty Cycle S3% S2 min.	Thermal Switch	UL Certified	Protection index	Type	Material Number
C91	12	1600	7,5% 3 min	NO	NO	IP 54	C162090000	R932000272
C102	12	1600	7,5% 3 min	YES	NO	IP 54	C1620S1002	R932000201
C92	24	2200	4,5% 1,2 min	NO	NO	IP 54	C162091000	R932000273
C103	24	2200	4,5% 1,2 min	YES	NO	IP 54	C1620S1003	R932000202

Electric Motor C91-C102 (12V – 1600W) Diagrams

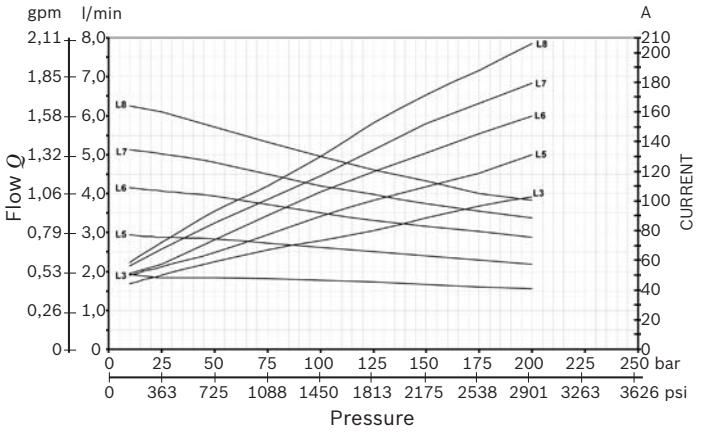

Electric Motor C92-C103 (24V – 2200W) Diagrams

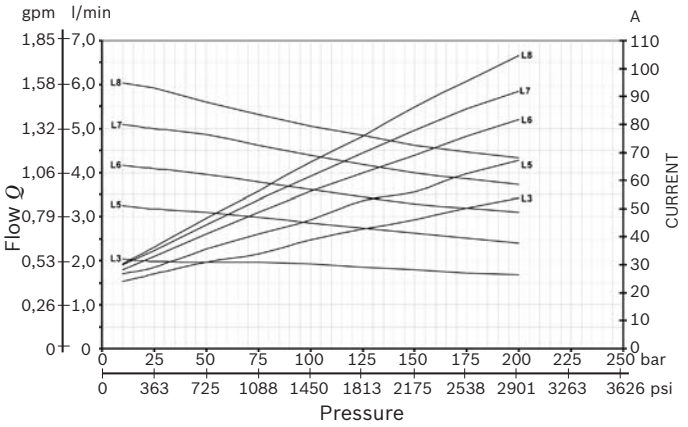

S2 - S3 performance

Amps	S2 (min.)	S3(%) (10 min.)
150	5,5	12%
200	3,5	8%
250	2	6%
300	1,5	4%
350	1	3%

S2 - S3 performance

Amps	S2 (min.)	S3(%) (10 min.)
75	5	12%
100	3	7%
125	1,8	5%
150	1	4%
175	0,7	2,5%

Note
The values of the curves may change slightly depending on the brand / model of pump that is mounted.

Relay

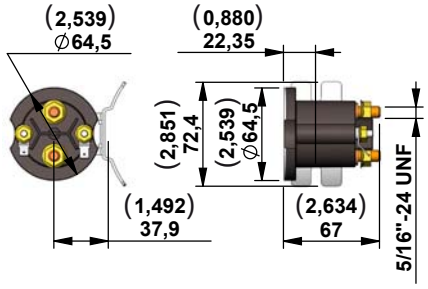

(Pict. 1)

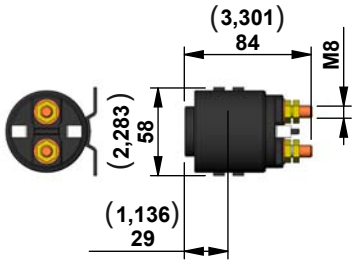

(Pict. 2)

Starting Relay **Standard Performance** (Pict. 1)

Code	Voltage (V)	Nominal Current (A)	Short time Current (A)	Protection INDEX	UL Certified	Type	Material Number
A	Without Relay						
G	24	150	350	IP66	NO	C165534000	R932000692
H	24	150	350	IP66	NO	C165535000	R932000693

Starting Relay **High Performance** (silver plate contact) (Pict. 2)

Code	Voltage (V)	Nominal Current (A)	Short time Current (A)	Protection INDEX	UL Certified	Type	Material Number
A	Without Relay						
C	24	150	350	IP54	NO	C165524000	R932000690
E	24	150	350	IP54	NO	C165525000	R932000691

Kit Motor + Relay

Motor + Relay	Type	Material Number
C91+relay 12V STANDARD performance	K39681291PSCUF	R932007960
C91+relay 12V HIGH performance	K39681291CF	R932002749
C102+relay 12V STANDARD performance	K396812102PSCUF	R932007969
C102+relay 12V HIGH performance	K396812102CF	R932002715
C92+relay 24V STANDARD performance	K39682492PSCUF	R932007961
C92+relay 24V HIGH performance	K39682492EF	R932002818
C103+relay 24V STANDARD performance	K396824103PSCUF	R932007968
C103+relay 24V HIGH performance	K396824103EF	R932002771

Plastic Protection

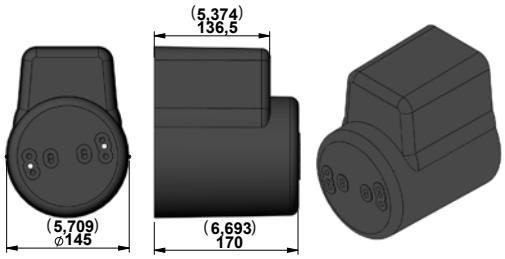

Code		Type	Material Number
0	Without Protection	-	-
1	With Protection	K229701000	R932002246

Kit for assembly plastic protection

Type	Material Number
K01K211518000	R932009439

Junction Elements for D.C. Electric Motor

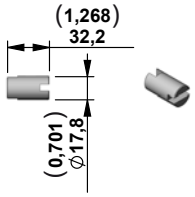

Junction Elements for manifolds **ME** series

Code	Type	Material Number
E31	K01K3970TR008	R932001907

Dimensions [mm (inches)]

Central Manifold ME

M52 - M55

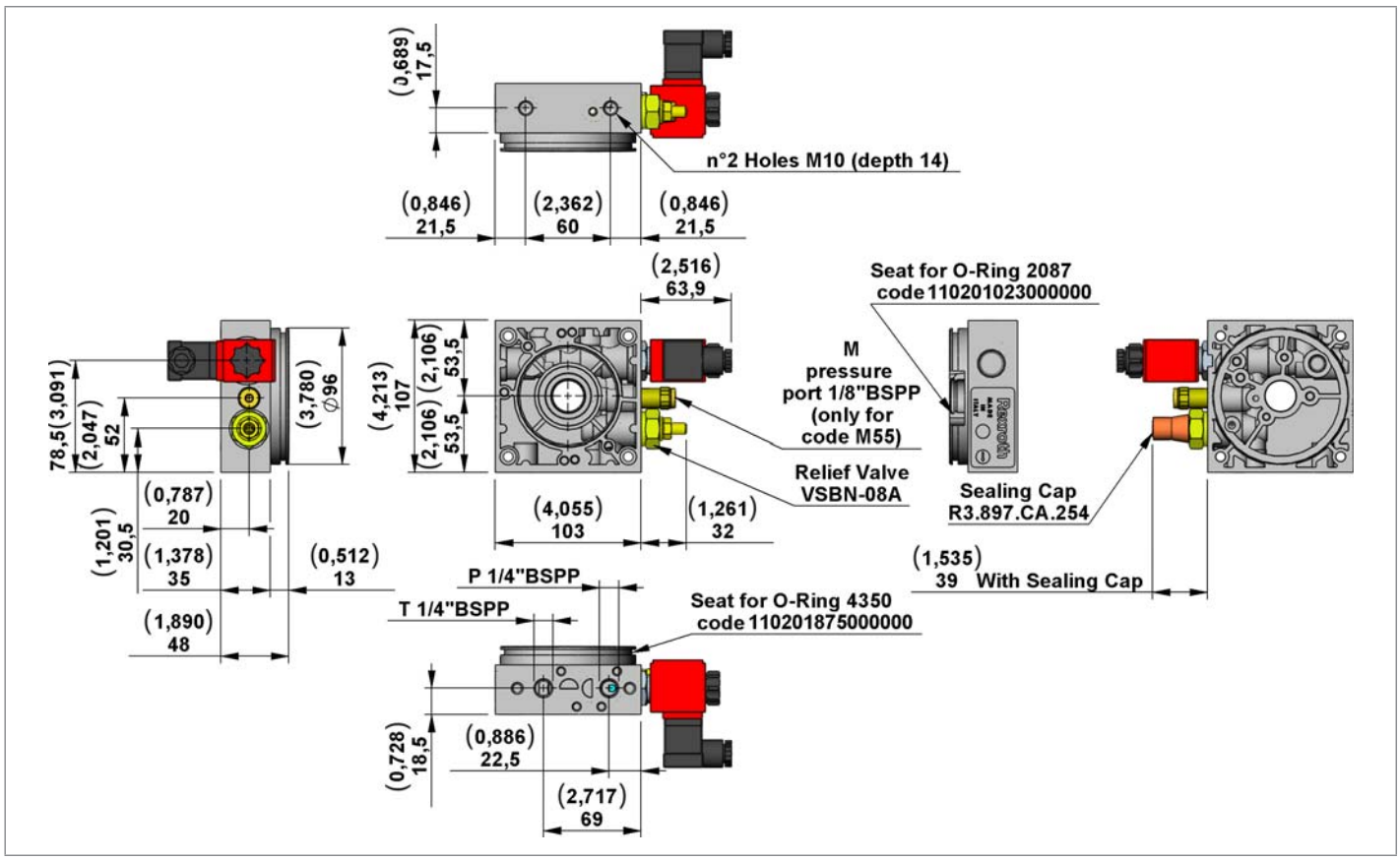

View Manifold Tank side

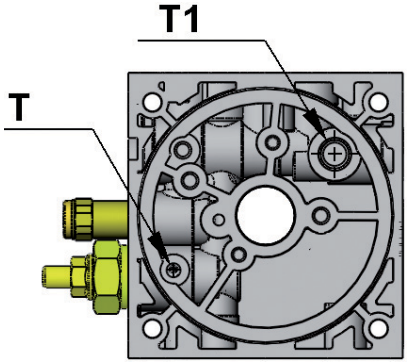

Manifold Hydraulic Diagram

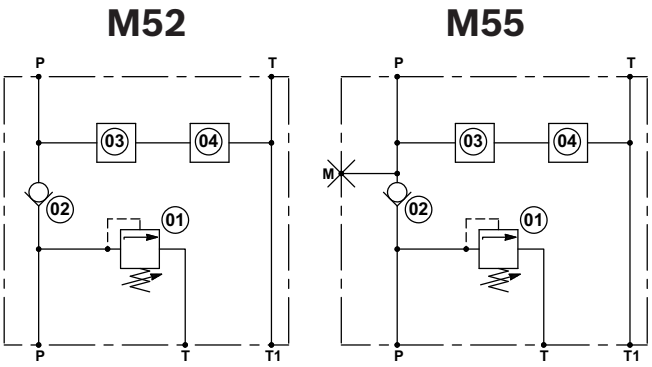

M52

Manifold Code with Relief Valve Pressure Range	Presure Range bar (psi)	Type	Material Number
M52/05	1O-70 (145-1015)	452A000	R932008635
M52/10	35-140 (508-2030)	452B000	R932008636
M52/20	105-210 (1523-3046)	452C000	R932008637
M52/35	175-350 (2538-5076)	452D000	R932008638

M55

Manifold Code with Relief Valve Pressure Range	Presure Range bar (psi)	Type	Material Number
M55/05	1O-70 (145-1015)	455A000	R932008639
M55/10	35-140 (508-2030)	455B000	R932008640
M55/20	105-210 (1523-3046)	455C000	R932008641
M55/35	175-350 (2538-5076)	455D000	R932008642

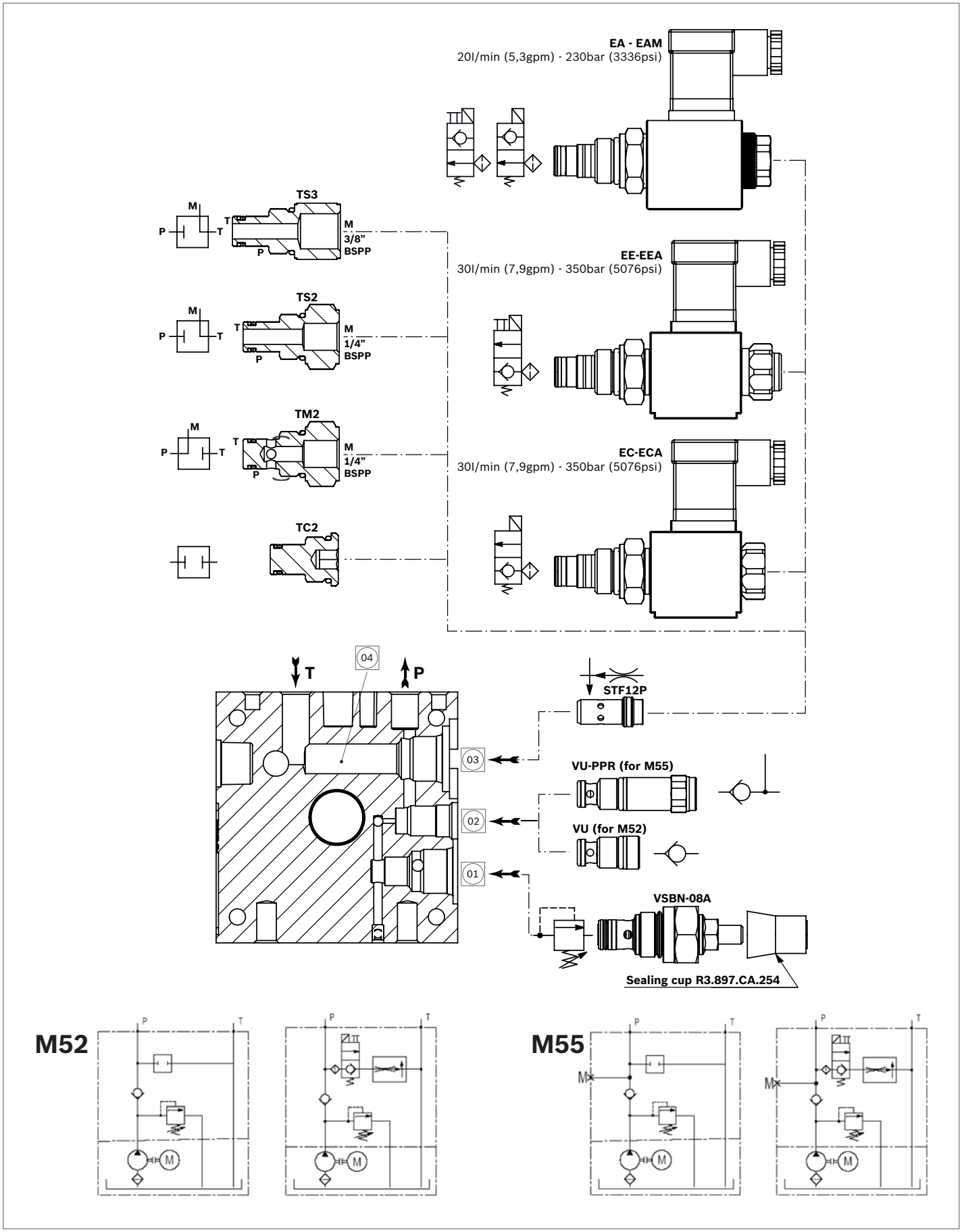
EA - EAM
20l/min (5,3gpm) - 230bar (3336psi)
EE-EEA
30l/min (7,9gpm) - 350bar (5076psi)
EC-ECA
30l/min (7,9gpm) - 350bar (5076psi)
TS3
M
3/8"
BSPP
TS2
1/4"
TM2
TC2
T
P
04
03
02
01
STF12P
VU-PPR (for M55)
VU (for M52)
VSBN-08A
Sealing cup R3.897.CA.254
M52
M55

Dimensions [mm (inches)]

Central Manifold ME

M53 - M57

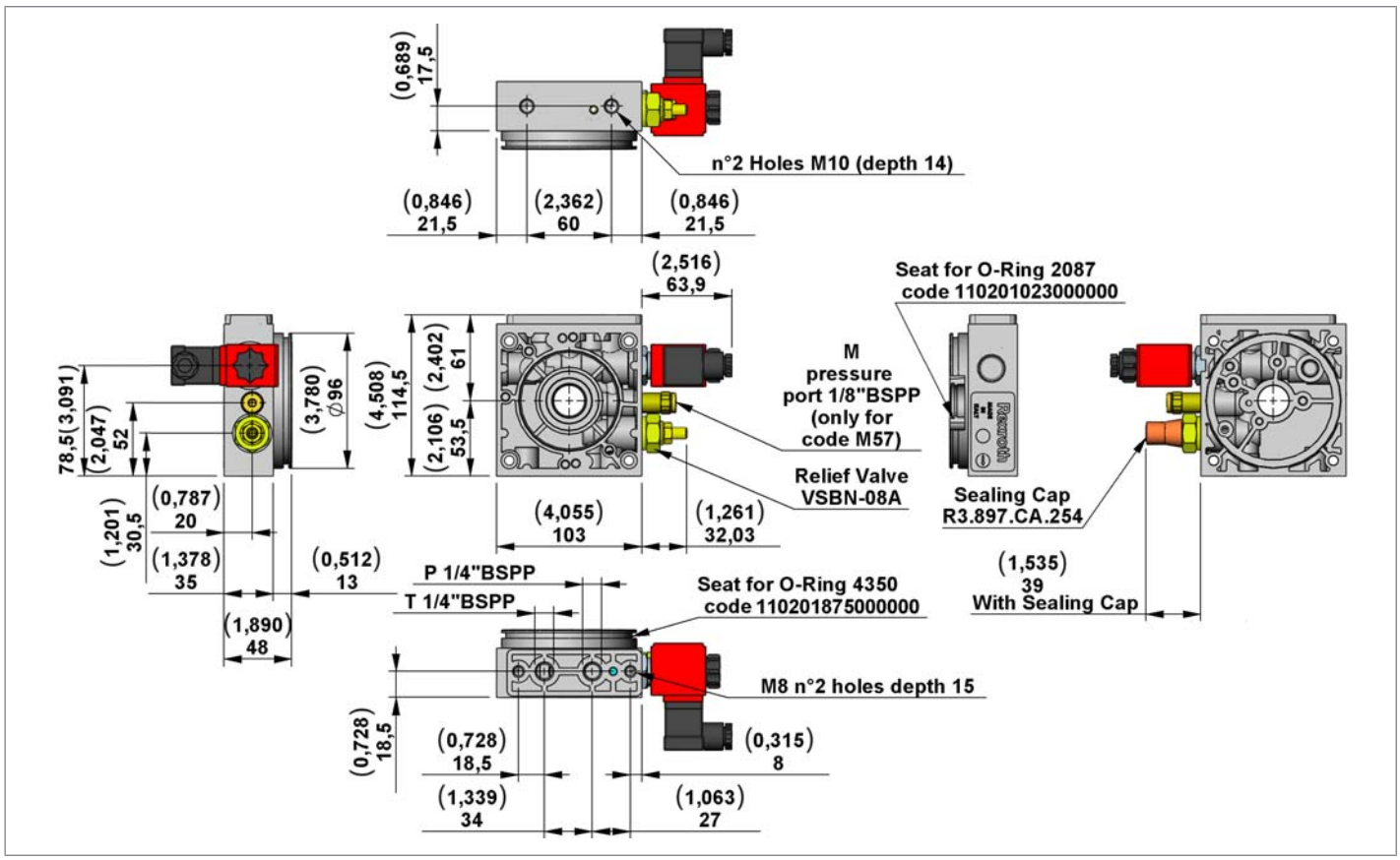

View Manifold Tank side

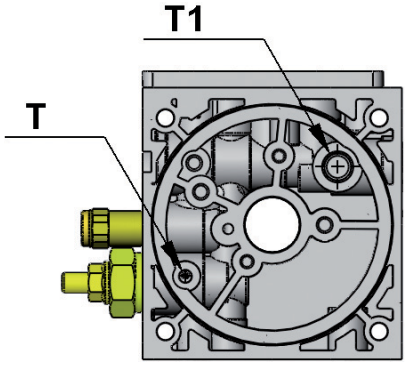

Manifold Hydraulic Diagram

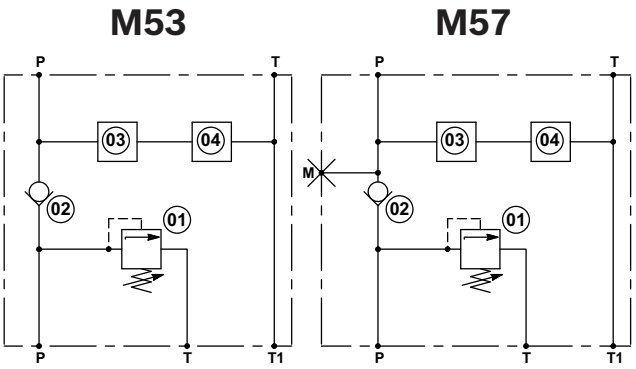

M53

Manifold Code with Relief Valve Pressure Range	Presure Range bar (psi)	Type	Material Number
M53/05	1O-70 (145-1015)	453A000	R932008627
M53/10	35-140 (508-2030)	453B000	R932008628
M53/20	105-210 (1523-3046)	453C000	R932008629
M53/35	175-350 (2538-5076)	453D000	R932008630

M57

Manifold Code with Relief Valve Pressure Range	Presure Range bar (psi)	Type	Material Number
M57/05	1O-70 (145-1015)	457A000	R932008631
M57/10	35-140 (508-2030)	457B000	R932008632
M57/20	105-210 (1523-3046)	457C000	R932008633
M57/35	175-350 (2538-5076)	457D000	R932008634

Bosch Rexroth AG RE 18306-01/02.2015

1008

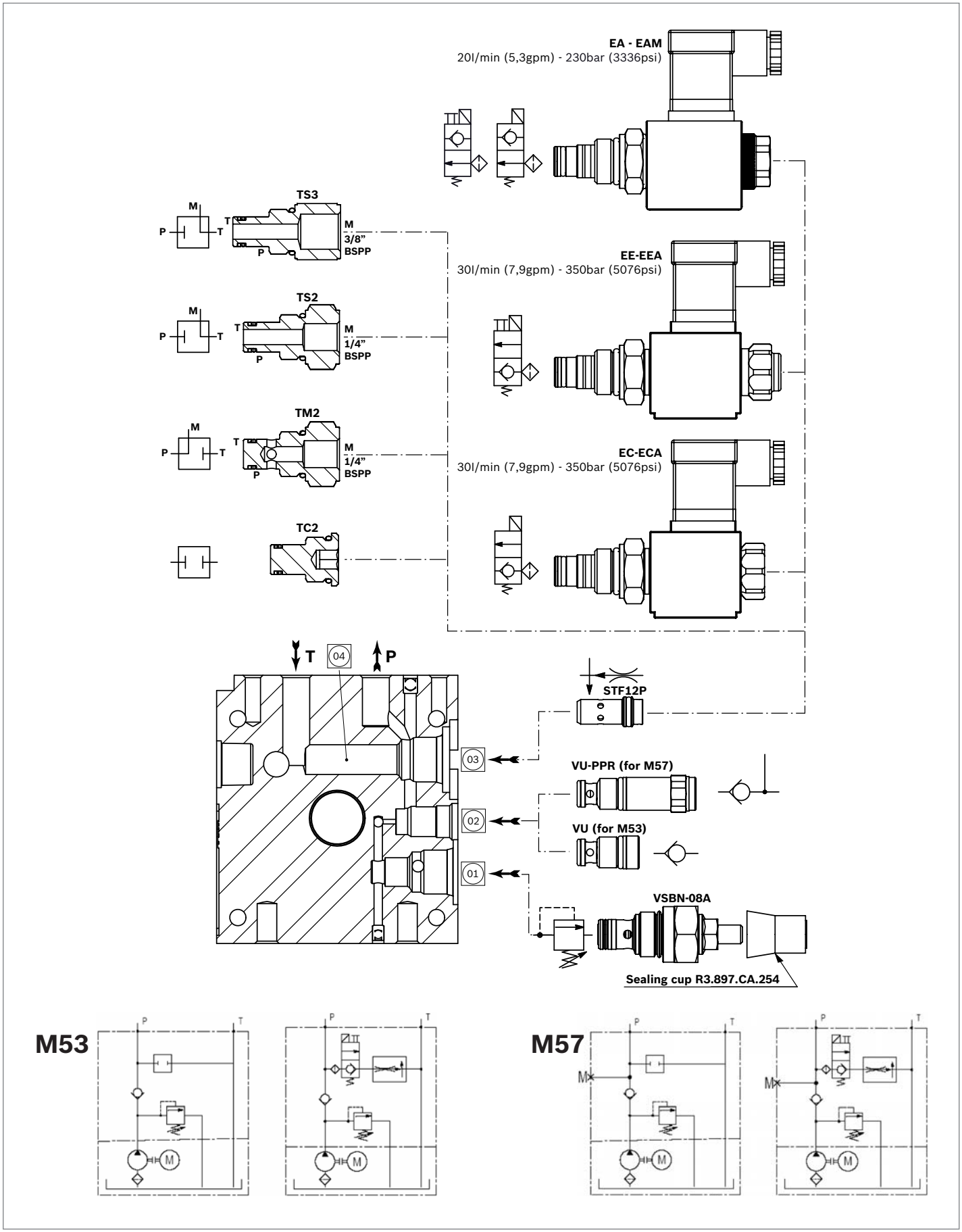
EA - EAM
20l/min (5,3gpm) - 230bar (3336psi)
EE-EEA
30l/min (7,9gpm) - 350bar (5076psi)
EC-ECA
30l/min (7,9gpm) - 350bar (5076psi)
TS3
M
3/8"
BSPP
TS2
1/4"
TM2
TC2
T
P
04
03
02
01
STF12P
VU-PPR (for M57)
VU (for M53)
VSBN-08A
Sealing cup R3.897.CA.254
M53
M57

Dimensions [mm (inches)]

Central Manifold ME

M54 - M58

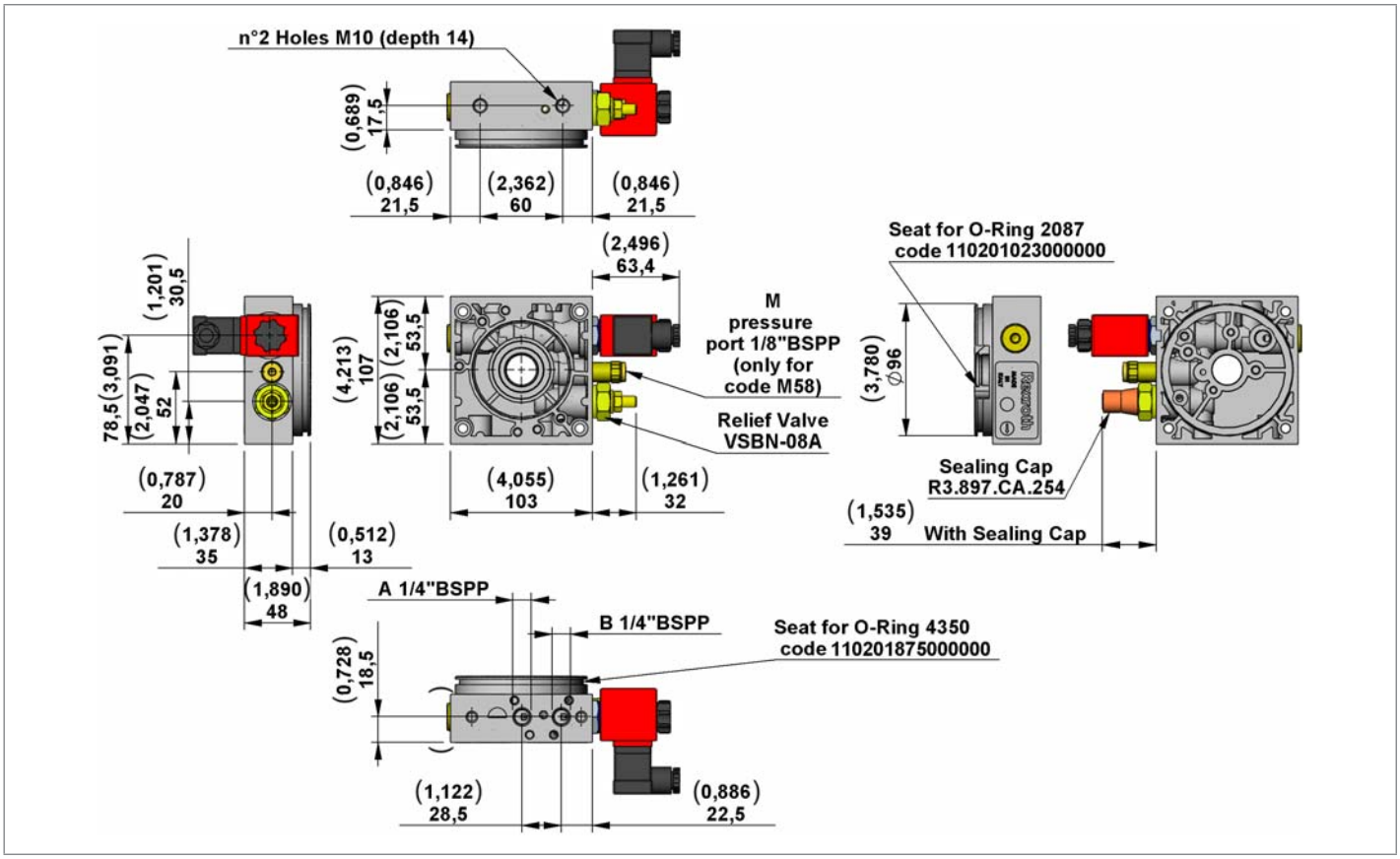

View Manifold Tank side

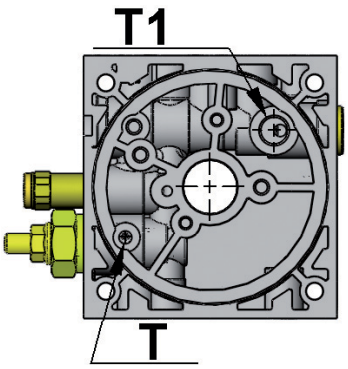

Manifold Hydraulic Diagram

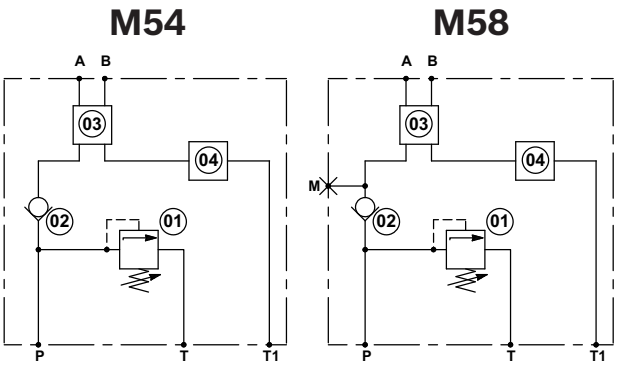

M54

Manifold Code with Relief Valve Pressure Range	Presure Range bar (psi)	Type	Material Number
M54/05	1O-70 (145-1015)	454A000	R932008619
M54/10	35-140 (508-2030)	454B000	R932008620
M54/20	105-210 (1523-3046)	454C000	R932008621
M54/35	175-350 (2538-5076)	454D000	R932008622

M58

Manifold Code with Relief Valve Pressure Range	Presure Range bar (psi)	Type	Material Number
M58/05	1O-70 (145-1015)	458A000	R932008623
M58/10	35-140 (508-2030)	458B000	R932008624
M58/20	105-210 (1523-3046)	458C000	R932008625
M58/35	175-350 (2538-5076)	458D000	R932008626

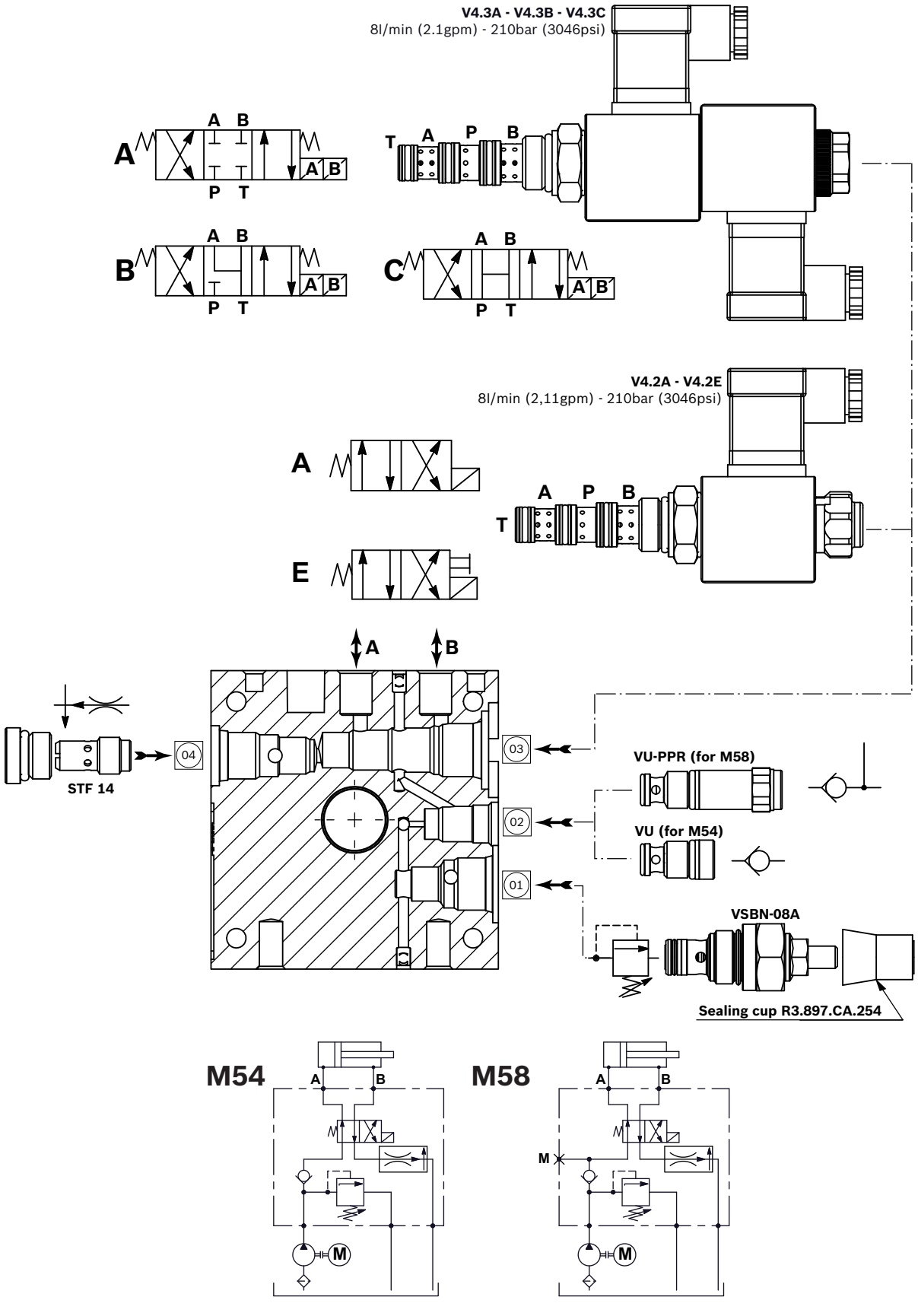
V4.3A - V4.3B - V4.3C
8l/min (2.1gpm) - 210bar (3046psi)
A
B
C
A B
P T
T A P B
V4.2A - V4.2E
8l/min (2,11gpm) - 210bar (3046psi)
E
04
STF 14
03
02
01
VU-PPR (for M58)
VU (for M54)
VSBN-08A
Sealing cup R3.897.CA.254
M54
M58
M

Dimensions [mm (inches)]

Central Manifold ME

A16

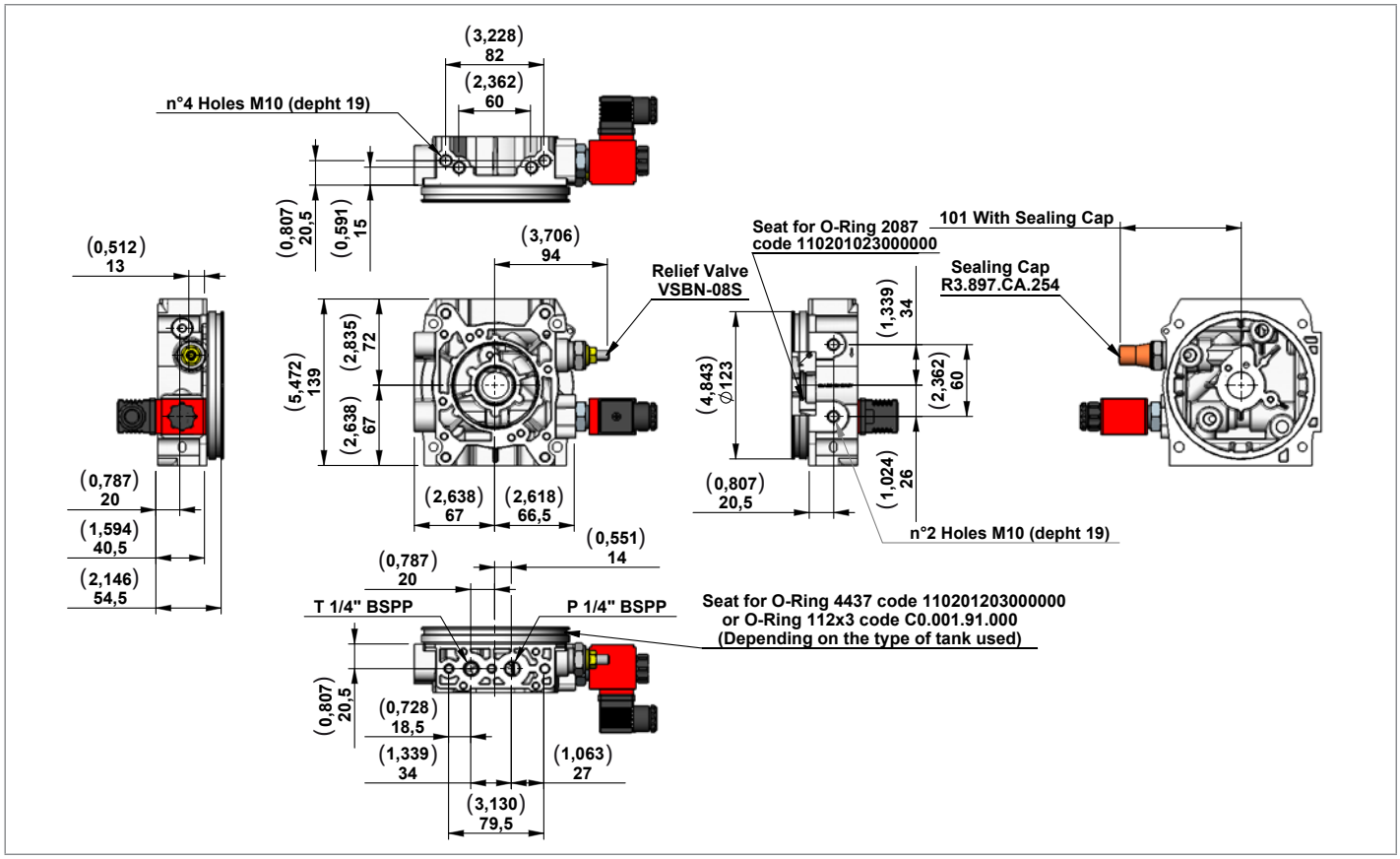

View Manifold Tank side

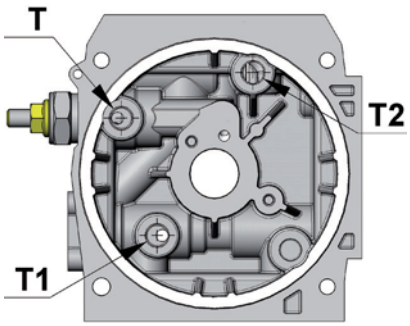

Manifold Hydraulic Diagram

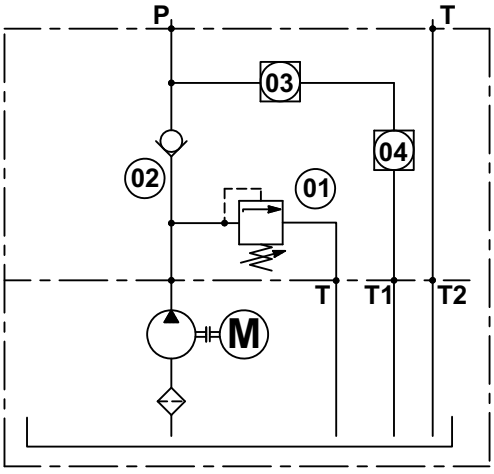

A16

Manifold Code with Relief Valve Pressure Range	Presure Range bar (psi)	Type	Material Number
A16/05	10-55 (145-798)	116A000A	R930052174
A16/10	35-100 (508-1450)	116B000A	R930052184
A16/20	90-250 (1305-3626)	116C000	R932008693

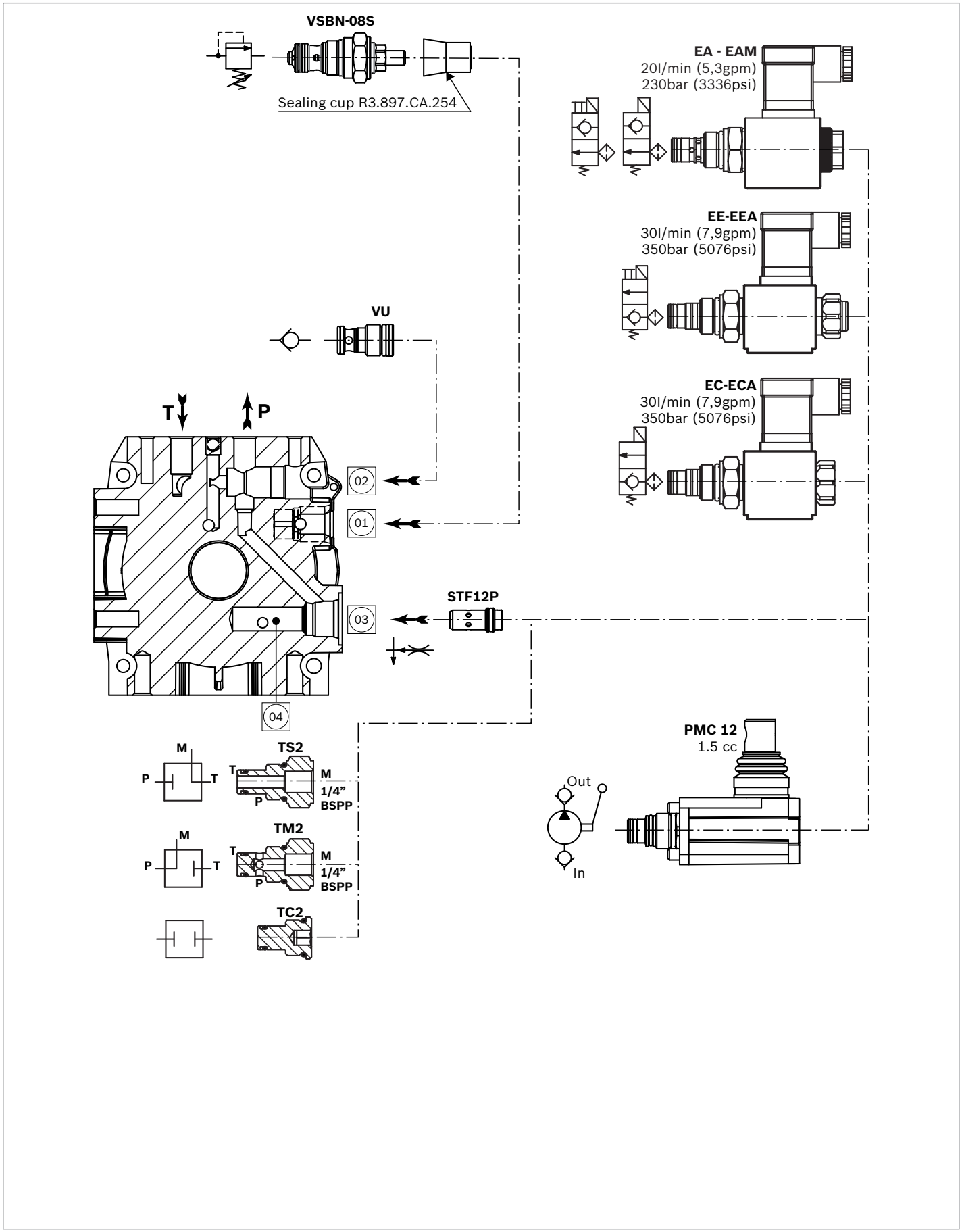
VSBN-08S
Sealing cup R3.897.CA.254
EA - EAM
20l/min (5,3gpm)
230bar (3336psi)
EE-EEA
30l/min (7,9gpm)
350bar (5076psi)
EC-ECA
30l/min (7,9gpm)
350bar (5076psi)
VU
T
P
02
01
03
04
STF12P
PMC 12
1.5 cc
Out
In
M
P
T
TS2
1/4"
BSPP
TM2
TC2

Central Manifold MR

10

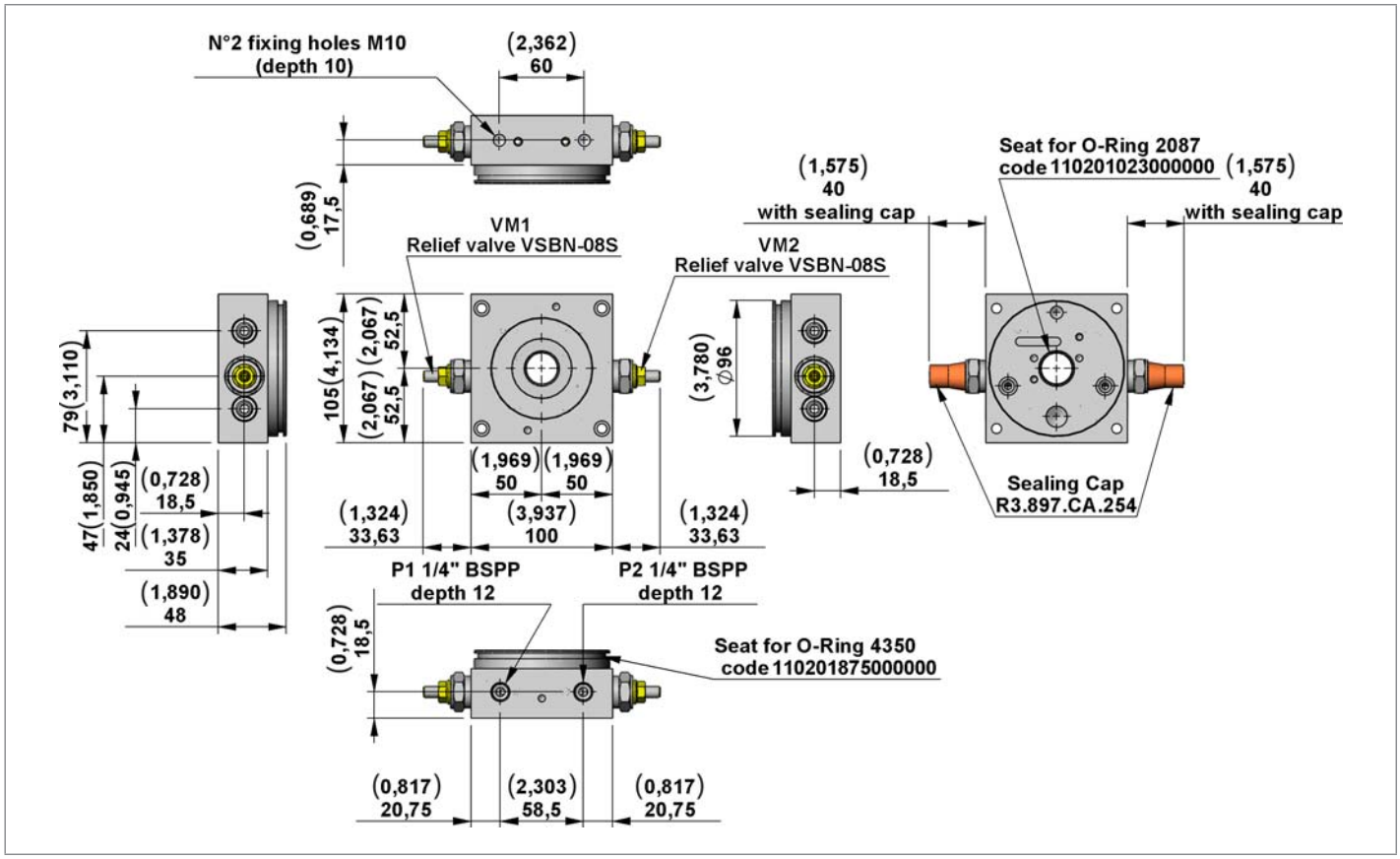

View Manifold Tank side

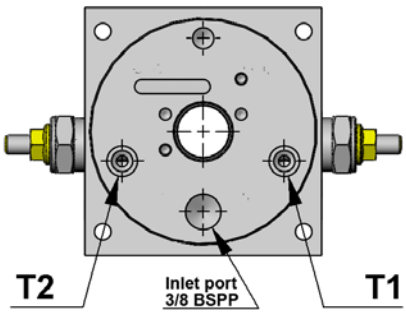

Manifold Hydraulic Diagram

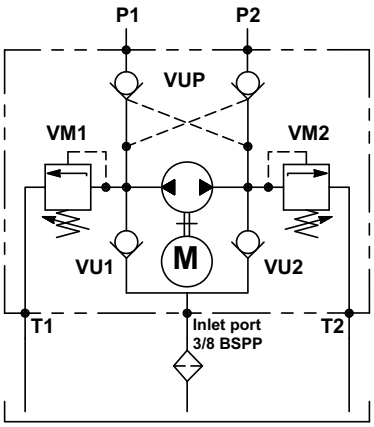

10

Manifold Code with Relief Valve Pressure Range	Presure Range bar (psi)	Type	Material Number
A10/05	10-55 (145-798)	810A000A	R930053852
A10/10	35-100 (508-1450)	810B000A	R930053853
A10/20	90-250 (1305-3626)	810C000	R932009780

Note
In this central manifold use only reversible pump “R” series.

Note
In the central manifold MR series is possible connect only the following motors:
DC motor code: C67 - C94 - C177 - C178 - C179 - C180 - C181 - C182
AC motor from size IEC56 to size IEC71.

Built-in Valve

VE3-NC Series

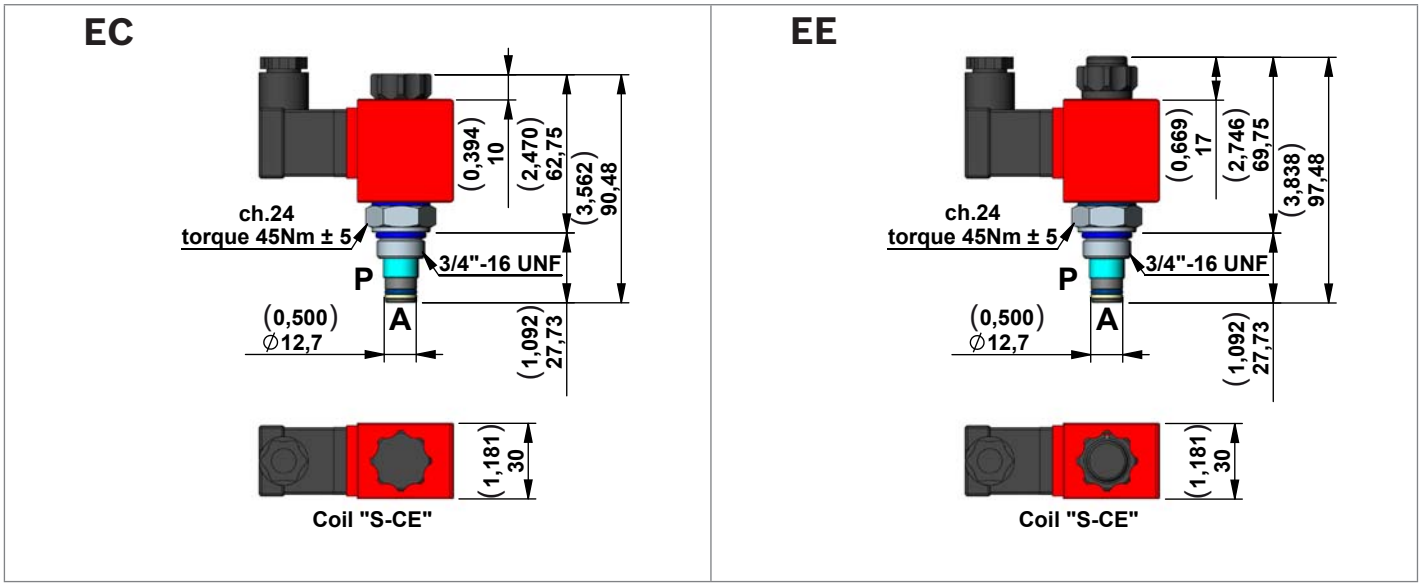

2 Way Pilot Operated Solenoid Valves, Normally Closed for D.C. current

Code	Type	Material Number
EC	K01V389671A20	R932009180
EE	K01V389671E20	R932009181

Description

This is a standard 2 way pilot operated valves poppet style.

- **Only for D.C. current.**
- Internal leakage: see technical data.
- Minimum operating voltage: 90% of nominal.
- Screen on P 300 Micron.
- Screw Type Emergency on EE.

Valve symbol

Code	Symbol	Operating features with solenoid	
		De-energized	Energized
EC	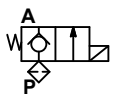	P ⬡ A	P <-> A
EE	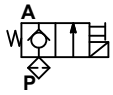	P ⬡ A	P <-> A

Technical Data

General		
Operating time	ms	Opening 30-40
		Closing 60-85
Max. working pressure	bar (psi)	350 (5076)
Max. flow	l/min (gpm)	30 (7,92)

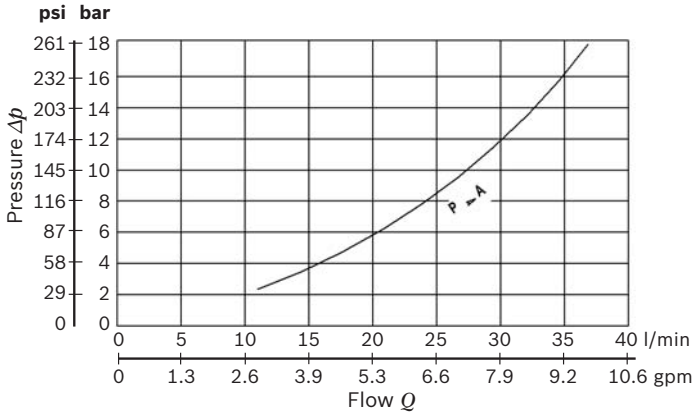

S-CE Coil Voltage Available

Voltage
12 Volts D.C.
24 Volts D.C.
48 Volts D.C.
24 Volts RAC
48 Volts RAC
110 Volts RAC
220 Volts RAC

Dimensions [mm (inches)]

VE1-NC Series

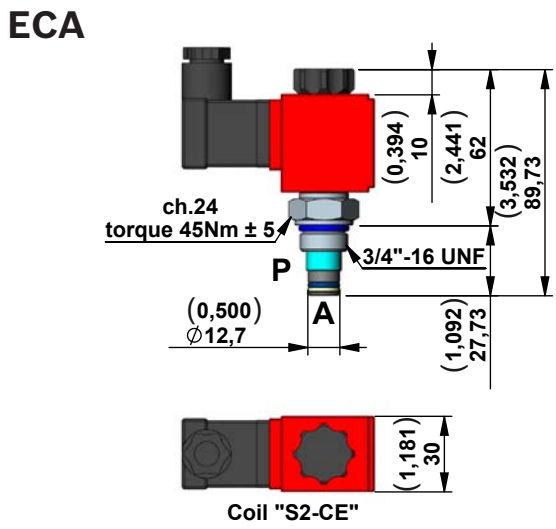

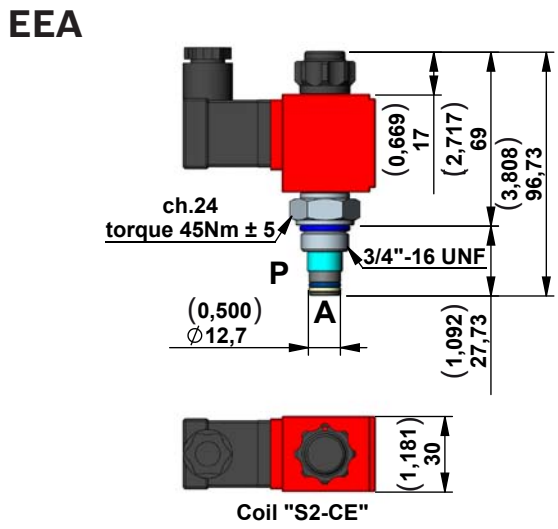

2 Way Pilot Operated Solenoid Valves, Normally Closed for A.C. current

Code	Type	Material Number
ECA	K01V389669A20	R932009182
EEA	K01V389669E20	R932009183

Description

This is a standard 2 way pilot operated valves poppet style.

- **Only for A.C. current.**
- Internal leakage: see technical data.
- Minimum operating voltage: 90% of nominal.
- Screen on P 300 Micron.
- Screw Type Emergency on EEA.

Valve symbol

Code	Symbol	Operating features with solenoid	
		De-energized	Energized
ECA	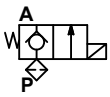	P ⬡ A	P -> A
EEA	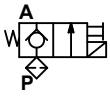	P ⬡ A	P -> A

Technical Data

General		
Operating time	ms	Opening 30-40
		Closing 60-85
Max. working pressure	bar (psi)	350 (5076)
Max. flow	l/min (gpm)	30 (7,92)

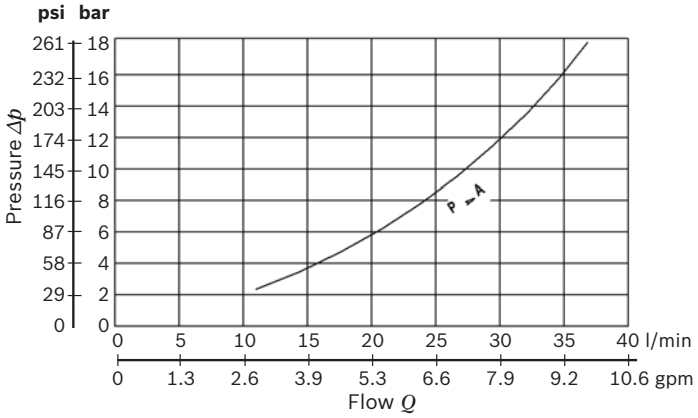

S2-CE Coil Voltage Available

Voltage
24 Volts 50 Hz A.C.
220 Volts 50 Hz A.C.
24 Volts 60 Hz A.C.
220 Volts 60 Hz A.C.
24 Volts 50-60 Hz A.C.

VE3-NA Series

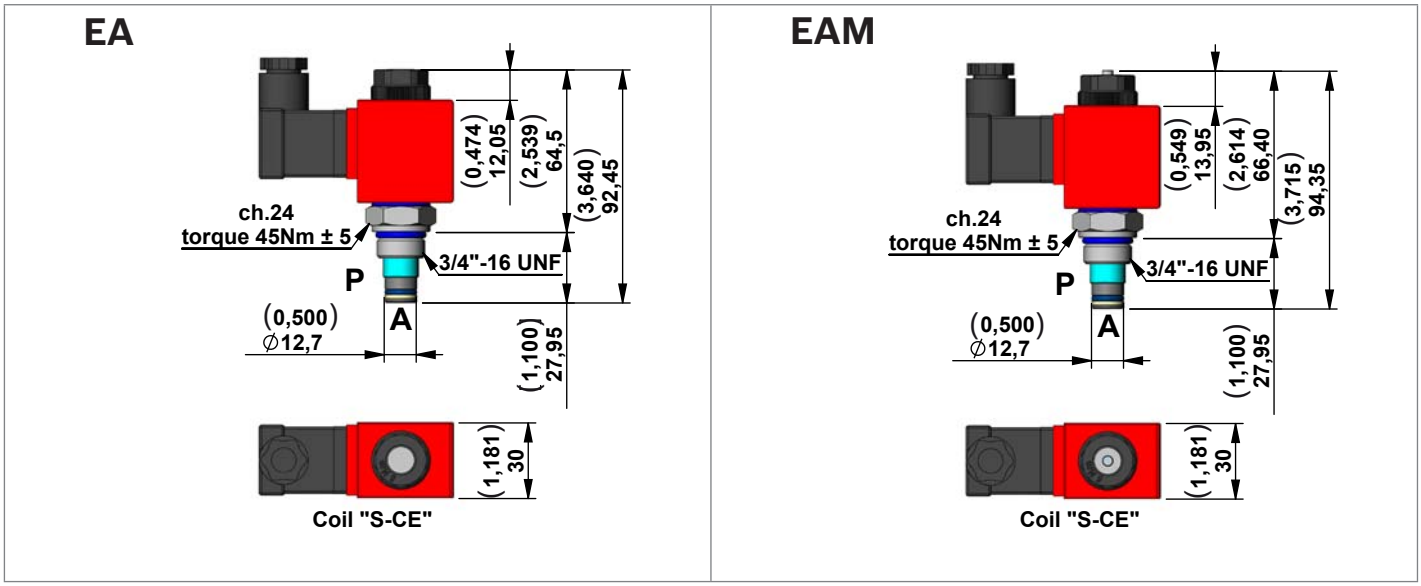

2 Way Pilot Operated Solenoid Valves, Normally Open

Code	Type	Material Number
EA	K01V389674A20	R932009184
EAM	K01V389674E20	R932009185

Description

This is a standard 2 way pilot operated valves poppet style.

- **Only for D.C. current.**
- Internal leakage: see technical data.
- Minimum operating voltage: 90% of nominal.
- Screen on P 300 Micron.
- Push Type Emergency on EAM.

Valve symbol

Code	Symbol	Operating features with solenoid	
		De-energized	Energized
EA	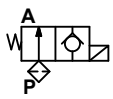	P -> A	P ⇔ A
EAM	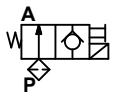	P -> A	P ⇔ A

Technical Data

General		
Max. working pressure	bar (psi)	230 (3336)
Max. flow	l/min (gpm)	20 (5,28)

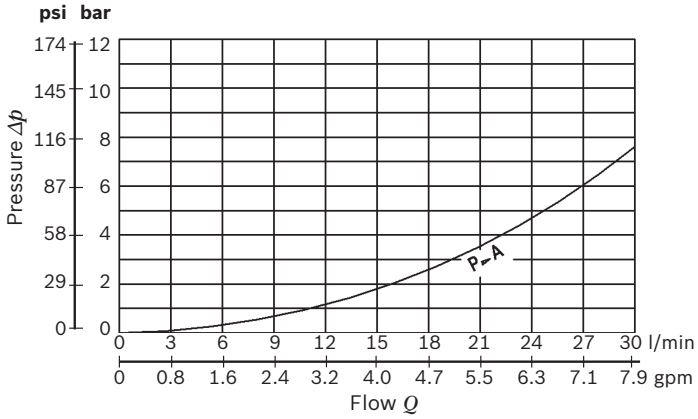

S-CE Coil Voltage Available

Voltage
12 Volts D.C.
24 Volts D.C.
48 Volts D.C.
24 Volts RAC
48 Volts RAC
110 Volts RAC
220 Volts RAC

Dimensions [mm (inches)]

V4DS-2P Series

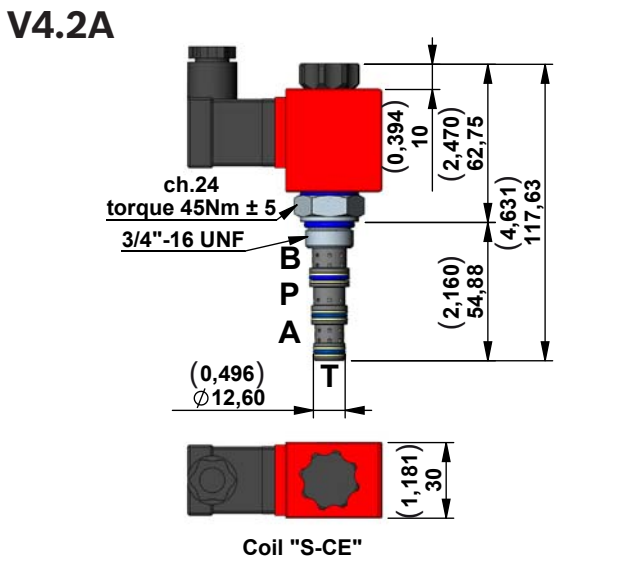

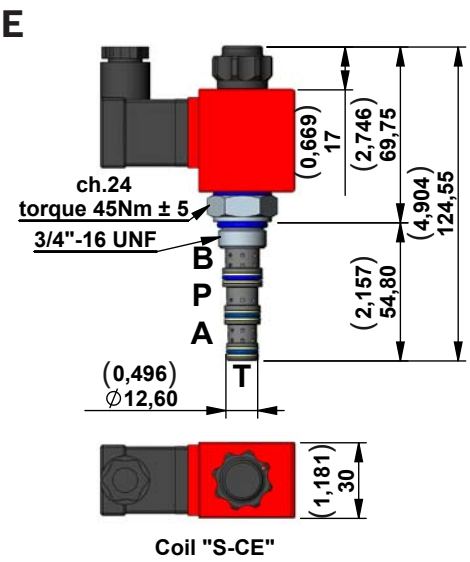

4 Way 2 Position Solenoid Valves Spool Type

Code	Type	Material Number
V4.2A	K01V389656A00	R932009300
V4.2E	K01V389656E00	R932009301

Technical Data

General		
Max. working pressure	bar (psi)	210 (3046)
Max. flow	l/min (gpm)	8 (2,11)

Description

4 Way 2 Position Solenoid Valves Spool Type

- **Only for D.C. current.**
- Minimum operating voltage: 90% of nominal.
- Screw Type Emergency on V4.2E.

Valve symbol

Code	Symbol	Operating features with solenoid	
		De-energized	Energized
V4.2A		P <-> A B <-> T	P <-> B A <-> T
V4.2E		P <-> A B <-> T	P <-> B A <-> T

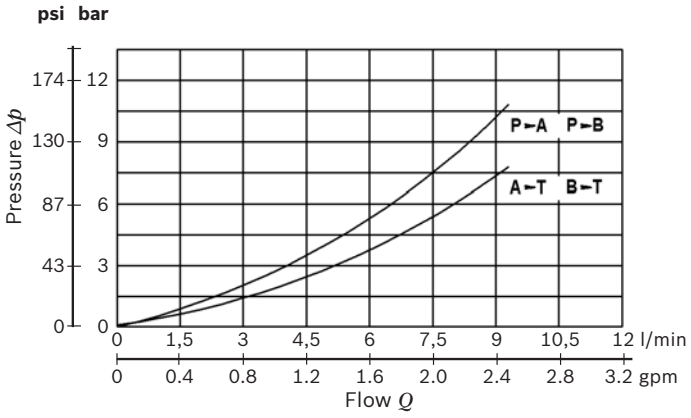

S-CE Coil Voltage Available

Voltage
12 Volts D.C.
24 Volts D.C.
48 Volts D.C.
24 Volts RAC
48 Volts RAC
110 Volts RAC
220 Volts RAC

V4DS-3P Series

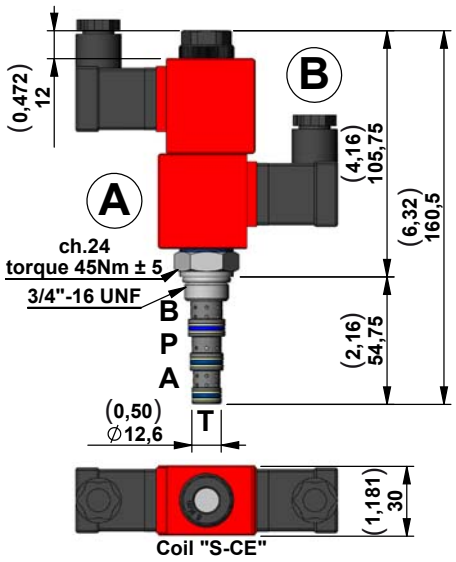

4 Way 3 Position Solenoid Valves Spool Type

Code	Type	Material Number
V4.3A	K01V389657A00	R932009303
V4.3B	K01V389657B00	R932009304
V4.3C	K01V389657C00	R932009305

Description

4 Way 3 Position Solenoid Valves Spool Type

- **Only for D.C. current.**
- Minimum operating voltage: 90% of nominal.

Valve symbol

Code	Symbol	Operating features with solenoid		
		Energized A	De-energized	Energized B
V4.3A	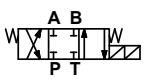	P -> B A -> T	P P A ⬡⬡ A B B T T	P -> A B -> T
V4.3B	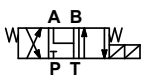	P -> B A -> T	A → T B → T P ⬡	P -> A B -> T
V4.3C	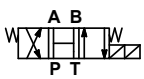	P -> B A -> T	P P A <-> A B B T T	P -> A B -> T

Technical Data

General		
Max. working pressure	bar (psi)	210 (3046)
Max. flow	l/min (gpm)	8 (2,11)

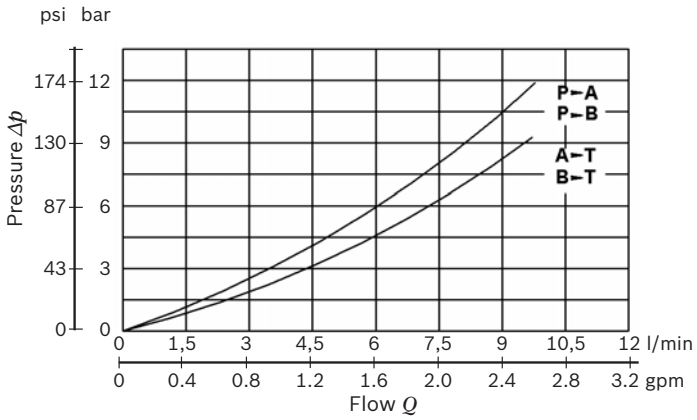

S-CE Coil Voltage Available

Voltage
12 Volts D.C.
24 Volts D.C.
48 Volts D.C.
24 Volts RAC
48 Volts RAC
110 Volts RAC
220 Volts RAC

COIL Model S-CE – 18W – ED 100%

for valves VE3-NC, VE3-NA, V4DS-2P, V4DS-3P Series

Coil protection: Polyamide resin with fiber glass for Heat insulation class F (155°C (311°F)) IXEF for Heat insulation class H (180°C (356°F)).

Solenoids “S-CE” (18 W) are designed for continuos duty ED100%.

Ambient temperature range: -15°/+40°

Inlet voltage fluctuations must not exceed +/- 10% of nominal voltage to obtain correct operations and long life coils

Protection degree: see tables below

DIN 43650 - ISO 4400 IP65 with connector assembled

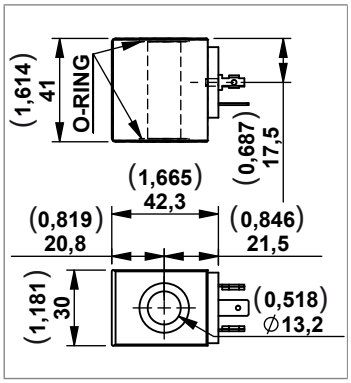

Code	Voltage	Heat Insulation class	Type	Material Number
OB	12 Volts D.C.	F (155°C) (311°F)	C166455OB1	R932000804
OC	24 Volts D.C.	F (155°C) (311°F)	C166455OC1	R932000805
OD	48 Volts D.C.	F (155°C) (311°F)	C166455OD1	R932000806
OBH	12 Volts D.C.	H (180°C) (356°F)	C166462OB1	R932000819
OCH	24 Volts D.C.	H (180°C) (356°F)	C166462OC1	R932000820
OV	24 Volts RAC	H (180°C) (356°F)	C166462OV1	R932000821
OK	48 Volts RAC	H (180°C) (356°F)	C166462OK1	R932008238
OW	110 Volts RAC	H (180°C) (356°F)	C166462OW1	R932008239
OZ	220 Volts RAC	H (180°C) (356°F)	C166462OZ1	R932000822

AMP JUNIOR IP67

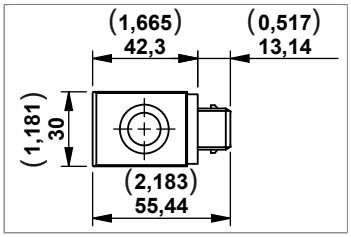

Code	Voltage	Heat Insulation class	Type	Material Number
OBA	12 Volts D.C.	F (155°C) *(311°F)*	C166458OB1	R932000815
OCA	24 Volts D.C.	F (155°C) *(311°F)*	C166458OC1	R932000816

SINGLE LEAD IP54

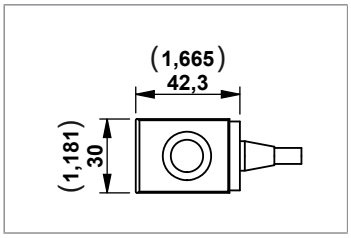

Code	Voltage	Heat Insulation class	Type	Material Number
OBL	12 Volts D.C.	F (155°C) *(311°F)*	C166467OB00600F	R932009109
OCL	24 Volts D.C.	F (155°C) *(311°F)*	C166467OC00600F	R932007010
Cable Lenght 600mm				

DEUTSCH DT04-2P-V IP67

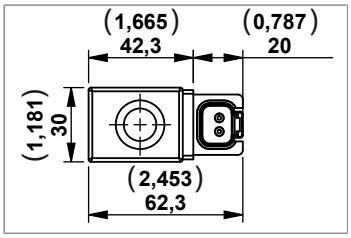

Code	Voltage	Heat Insulation class	Type	Material Number
OBD	12 Volts D.C.	F (155°C) *(311°F)*	C166463OB1	R932000823
OCD	24 Volts D.C.	F (155°C) *(311°F)*	C166463OC1	R932009110

COIL Model S2-CE – 18W – ED 100%
for valves VE1-NC Series

Coil protection: Polyamide resin with fiber glass for Heat insulation class F (155°C) (311°F).
Solenoids “S2-CE” (18 W) are designed for continuos duty ED100%.
Ambient temperature range : -15°/+40°
Inlet voltage fluctuations must not exceed +/- 10% of nominal voltage to obtain correct operations and long life coils
Protection degree: IP65 IEC 144 – DIN 40050 (total protection against dust and low pressure jets) with connector

DIN 43650 - ISO 4400 IP65 (with connector assembled)

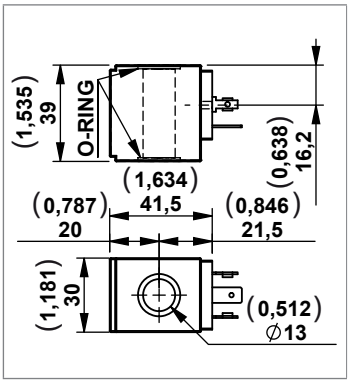

Code	Voltage	Heat Insulation class	Type	Material Number
OH	24 Volts 50 Hz A.C.	F (155°C) *(311°F)*	C166401OH1	R932000762
ON	220 Volts 50 Hz A.C.	F (155°C) *(311°F)*	C166401ON1	R932000766
OP	24 Volts 60 Hz A.C.	F (155°C) *(311°F)*	C166401OP1	R932000767
OS	220 Volts 60 Hz A.C.	F (155°C) *(311°F)*	C166401OS1	R932000769
OU	24 Volts 50-60 Hz A.C.	F (155°C) *(311°F)*	C166401OU1	R932000771

CONNECTOR IP67 - EN175000 (DIN 4350-A) / ISO 4400

Ambient temperature - Standard		°C (°F)	- 20 to + 60 (-4 to +140°F)
Type of protection according to DIN 40050			IP67 with cable socket mounted and locked
Operating voltage		V	Choose the proper ordering code according to the circuit
Maximum operating current	Standard	A	16
	With rectifier	A	1
Number of pins			2 + PE
Clamping range for cables having an outer diameter of		mm (inch)	5, up to 10 (0,2 up to 0,4)
Cable entry			Pg9 / Pg11 (unified)
Maximum cable cross-section		mm^2 ($inch^2$)	1.5 (0,002)

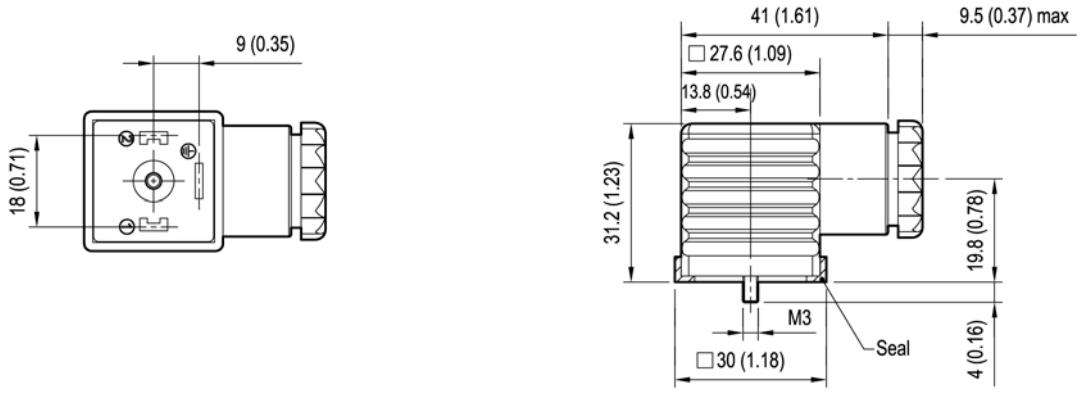

Standard Circuit

Code	Colour	Cable entry	Type	Material Number
WC	Without Connector			
CS	black	Pg9 / Pg11	OD016901000000	R934004344
	grey	Pg9 / Pg11	OD016901000003	R934004346

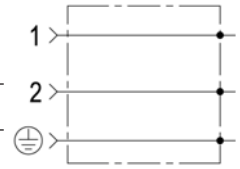

Circuit with VDR + Wave Rectifier

Code	Voltage V		Diode Capacity I max	Colour	Cable entry	Type	Material Number
	AC	DC					
CR	230	/	1A	black	Pg9 / Pg11	OD01690201OZ00	R934004353

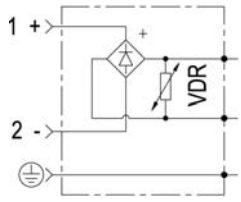

Note
Diode with capacity max 1 Amp.

PMC12 Order Code for Lever (only for manifold code A16)

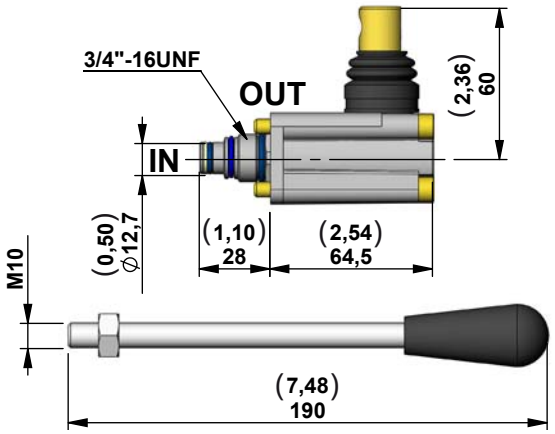

Type	Material Number
K250113000	R932002448

Technical Data

General		
Max. working pressure	bar (psi)	300 (4500)
Displacement	cc	1,5

Hand pump (1.5cc)

Code	Diagram	Type with lever	Material Number with lever
PMC12	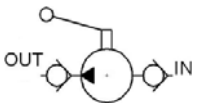	K01V388540LV190	R932009298

Plug for Cavity

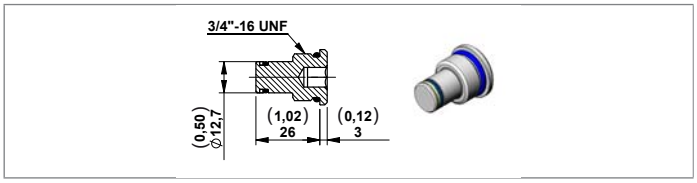

Code	Diagram	Type	Material Number
TC2		R3897TA001	R932003193

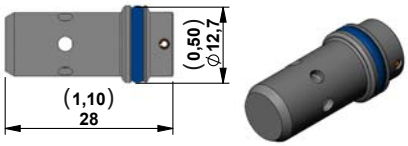

1/4” Auxiliary Return Port

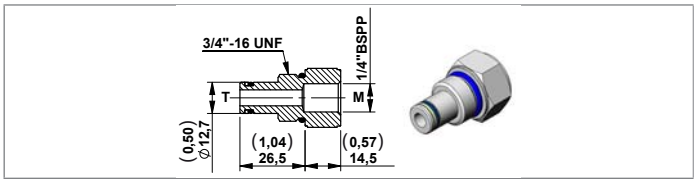

Code	Diagram	Type	Material Number
TS2		R3897TA304	R932003214

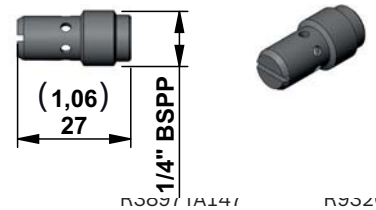

3/8” Auxiliary Return Port

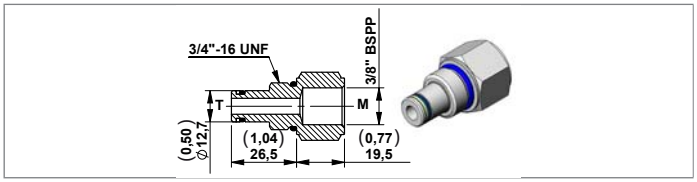

Code	Diagram	Type	Material Number
TS3		R3897TA147	R932003195

1/4” Auxiliary Pressure Port

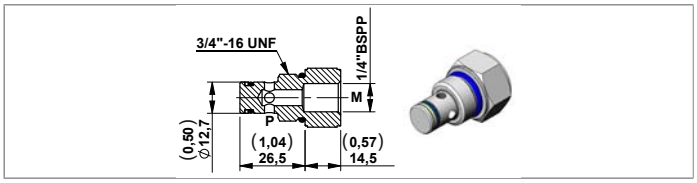

Code	Diagram	Type	Material Number
TM2		R3897TA305	R932003215

Flow Control Valves Pressure Compensated

Code
STF12P
STF14

Gear Pumps

Gear Pumps Group 0.5 for ME

	l/min (gpm)	Diagram	Type	Material Number
A	1 (0,3)			
B	2 (0,5)			
C	3 (0,8)			
D	4 (1,1)			
E	5 (1,3)			
F	6 (1,6)			
G	7 (1,9)			
H	8 (2,1)			
I	9 (2,4)			
L	10 (2,6)			
A	1 (0,3)		V38950100A	R932003836
B	2 (0,5)			
C	3 (0,8)			
D	4 (1,1)			
E	5 (1,3)			
F	6 (1,6)			
G	7 (1,9)			
H	8 (2,1)			
I	9 (2,4)			
L	10 (2,6)			

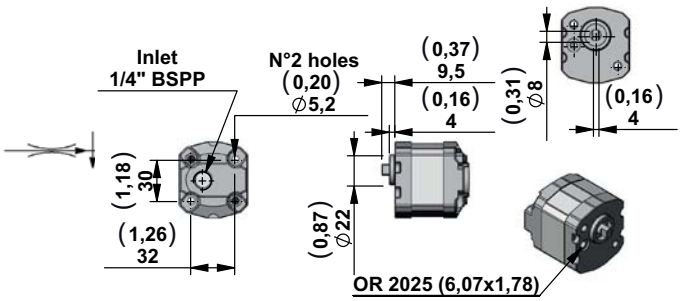

P2: intermittent max Pressure.
P3: peak Max Pressure (max 2 seconds)

Code	Displacement cc/rev	Flow at 1500 rpm l/min (gpm)	P2 bar (psi)	P3 bar (psi)	Type	Material Number
L1	0,18	V38950100D 0,27 (0,07)	R932003839	190 (2756)	230(3336)	K01CV641L1000	R932007490
L2	0,25	V38950100E 0,37 (0,10)	R932003840	190 (2756)	230(3336)	K01CV641L200C	R932007491
L3	0,50	V38950100F 0,75 (0,20)	R932003841	190 (2756)	230(3336)	K01CV641L300C	R932007492
L5	0,75	V38950100G 1,12 (0,30)	R932003842	190 (2756)	230(3336)	K01CV641L500C	R932007494
L6	1,00	V38950100H 1,50 (0,40)	R932003843	190 (2756)	230(3336)	K01CV641L600C	R932007495
L7	1,25	V38950100I 1,87 (0,50)	R932003844	190 (2756)	230(3336)	K01CV641L700C	R932007496
L8	1,50	V38950100L 2,25 (0,60)	R932003846	190 (2756)	230(3336)	K01CV641L800C	R932007497

Reversible Gear Pumps Group 0.5 for MR

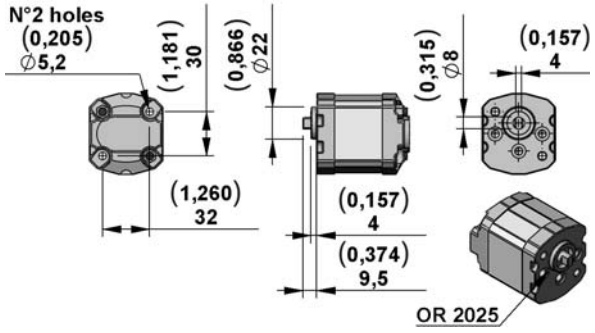

P2: intermittent max Pressure.
P3: peak Max Pressure (max 2 seconds)

Code	Displacement cc/rev	Flow at 1500 rpm l/min (gpm)	P2 bar (psi)	P3 bar (psi)	Type	Material Number
R1	0,24	0,36 (0,09)	170 (2465)	190 (2756)	C1641R100M	R932000678
R2	0,48	0,72 (0,19)	170 (2465)	190 (2756)	C1641R200M	R932000681
R3	0,61	0,92 (0,24)	170 (2465)	190 (2756)	C1641R300M	R932000682
R4	0,84	1,26 (0,33)	170 (2465)	190 (2756)	C1641R400M	R932000683
R5	0,97	1,50 (0,40)	170 (2465)	190 (2756)	C1641R500M	R932000684
R6	1,22	1,83 (0,48)	170 (2465)	190 (2756)	C1641R6000	R932008245
R7	1,50	2,25 (0,59)	170 (2465)	190 (2756)	C1641R700M	R932000685

Note
All pumps have anti-clockwise rotation.

Dimensions [mm (inches)]

Oil Tanks

Technical Data for Plastic Tanks

Temperature range	°C (°F)	-15....+70 (5....158)
Materials		PE=Polyethylene - PP=Polypropilene
Seal		For all the plastic Tanks use O-ring 4350 (Ø88,5x3,53) Code: 110201875000000 Material-Number: R932000191

Code	Tank capacity l (USgal)	Useable capacity l (USgal)	L mm (inch)	Material	Type	Material Number
S284	0,5 (0,13)	0,4 (0,11)	123 (4,84)	PP	K01M3976SE318	R932002054
S286	1 (0,26)	0,7 (0,18)	186 (7,32)	PP	K01M3976SE320	R932002056
S285	0,5 (0,13)	0,4 (0,11)	123 (4,84)	PP	K01M3976SE319	R932002055
S287	1 (0,26)	0,7 (0,18)	186 (7,32)	PP	K01M3976SE321	R932002057
S270	1 (0,26)	0,9 (0,24)	-	PE	K01X3976SE303	R932002077

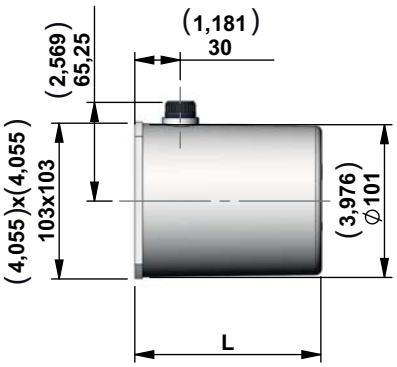

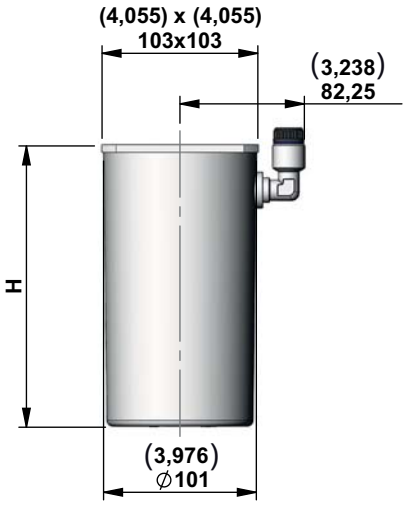

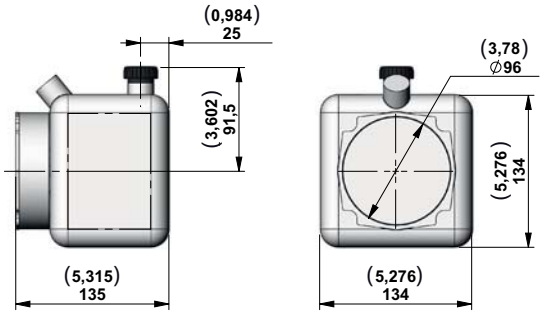

Plastic Tanks

Code	Tank capacity l (USgal)	Useable capacity l (USgal)	L mm (inch)	Material	Type	Material Number
S271	1,8 (0,48)	1,6 (0,42)	170 (6,71)	PE	K01X3976SE304	R932002078
S272	2,5 (0,66)	2,2 (0,58)	240 (9,45)	PE	K01X3976SE305	R932002079
S273	1 (0,26)	0,9 (0,24)	135 (5,31)	PE	K01X3976SE306	R932002080
S274	1,8 (0,48)	1,6 (0,42)	170 (6,71)	PE	K01X3976SE307	R932002081
S275	2,5 (0,66)	2,2 (0,58)	240 (9,45)	PE	K01X3976SE308	R932002082

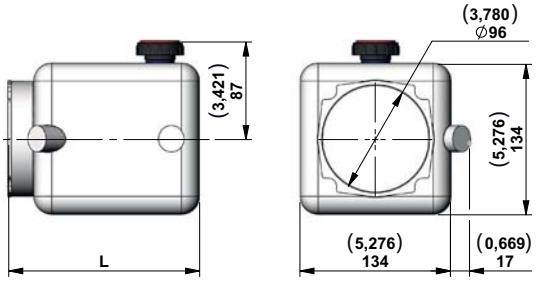

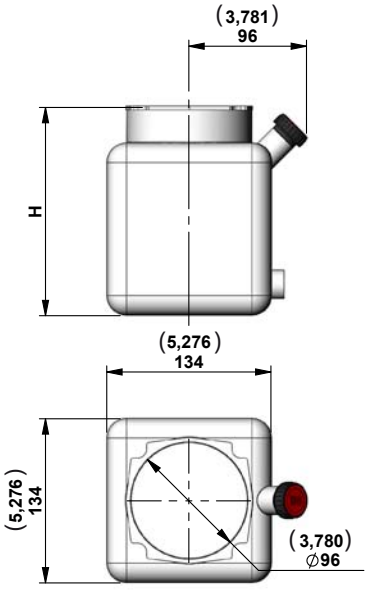

Assembly Kit for Plastic Tank - ME

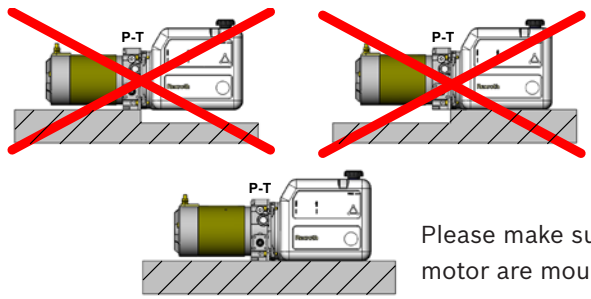

Please make sure that the tank and motor are mounted correctly

Code	Type	Material Number
S270 - S271 - S272 - S273 - S274 - S275	K2501VT005	R932002435
S284 - S285 - S286 - S287	K2501VT009	R932002438

Technical Data for Steel Tanks

Temperature range	°C (°F)	-15....+80 (5....176)
Materials		Steel
Colors		Black paint finish
Seal		For all the steel tanks with Ø99 is necessary to use O-Ring 4350 (Ø88,5x3,53) on the central manifold. Code:110201875000000 - Material-Number:R932000191. If is necessary to use a tank designed for KE-K (Ø123mm) must use the O-ring 4350 on the manifold and add the flange S81.

Collar for Tanks

Code	Description	Type	Material Number
S81	This adaptor allows you to use steel tanks designed for KE-K (Ø123 mm) with ME manifolds (Ø96 mm)	K01K3976SM091	R932002053

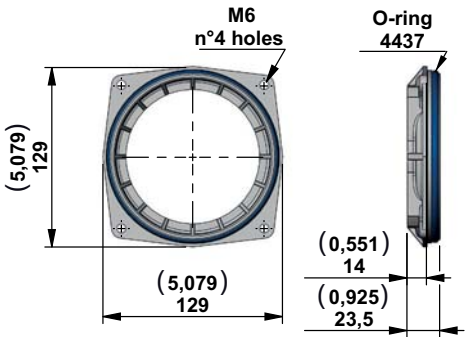

Steel Tanks

Code	Tank capacity l (USgal)	Useable capacity l (USgal)	L mm (inch)	A mm (inch)	Type	Material Number
S266	0,5 (0,13)	0,4 (0,11)	120 (4,72)	32 (1,26)	K01X3976SE299	R932002073
S267	1 (0,26)	0,7 (0,18)	184 (7,24)	32 (1,26)	K01X3976SE300	R932002074
S183	1 (0,26)	0,7 (0,18)	184 (7,24)	154 (6,06)	K01X3976SE213	R932002072

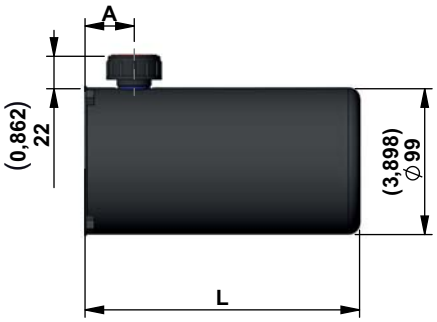

Code	Tank capacity l (USgal)	Useable capacity l (USgal)	H mm (inch)	Type	Material Number
S294	0,5 (0,13)	0,4 (0,11)	120 (4,72)	K01X3976SE328	R932002083
S295	1 (0,26)	0,7 (0,18)	184 (7,24)	K01X3976SE329	R932002084

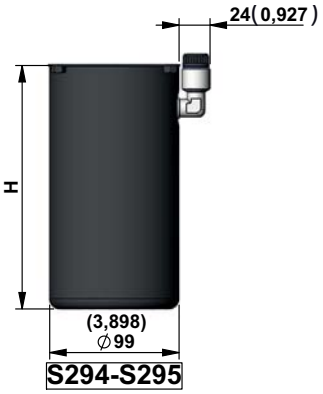

Steel Tanks

Code	Tank capacity l (USgal)	Useable capacity l (USgal)	L mm (inch)	A mm (inch)	Type	Material Number
S01	1 (0,26)	0,7 (0,18)	133 (5,24)	35 (1,38)	K01K3976SE001	R932001937
S20	1,8 (0,48)	1,2 (0,32)	178 (7,01)	35 (1,38)	K01K3976SE026	R932001953
S02	2,5 (0,66)	1,7 (0,45)	238 (9,37)	60 (2,36)	K01K3976SE003	R932001939
S161	3 (0,79)	2,3 (0,61)	280 (11,02)	60 (2,36)	K01K3976SE186	R932001987
S107	4 (1,06)	3,2 (0,84)	409 (16,10)	60 (2,36)	K01K3976SE119	R932001970
S144	1,8 (0,48)	1,2 (0,32)	178 (7,01)	35 (1,38)	K01K3976SE168	R932001983
S142	2,5 (0,66)	1,7 (0,45)	238 (9,37)	60 (2,36)	K01K3976SE166	R932001981

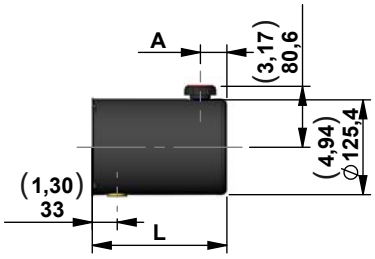

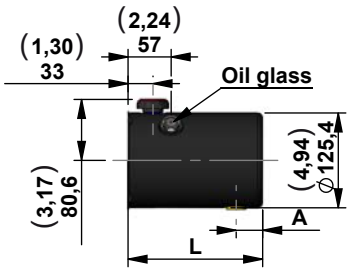

Code	Tank capacity l (USgal)	Useable capacity l (USgal)	H mm (inch)	A mm (inch)	Type	Material Number
S216	1 (0,26)	0,6 (0,16)	133 (5,24)	35 (1,38)	K01K3976SE246	R932002011
S217	1,8 (0,48)	1,1 (0,29)	178 (7,01)	35 (1,38)	K01K3976SE247	R932002012
S218	2,5 (0,66)	1,7 (0,45)	238 (9,37)	60 (2,36)	K01K3976SE248	R932009269
S239	3 (0,79)	2,3 (0,61)	280 (11,02)	60 (2,36)	K01K3976SE269	R932002015
S107V	4 (1,06)	3,2 (0,84)	409 (16,10)	60 (2,36)	K01K3976SE161	R932001976

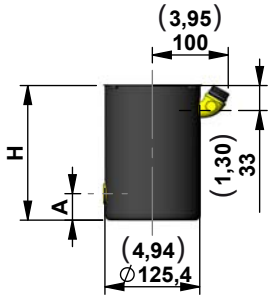

Steel Tanks

Code	Tank capacity l (USgal)	Useable capacity l (USgal)	H mm (inch)	A mm (inch)	Type	Material Number
S20V	1,8 (0,48)	1,1 (0,29)	178 (7,01)	35 (1,38)	K01K3976SE027	R932001954
S02V	2,5 (0,66)	1,7 (0,45)	238 (9,37)	60 (2,36)	K01K3976SE004	R932001940

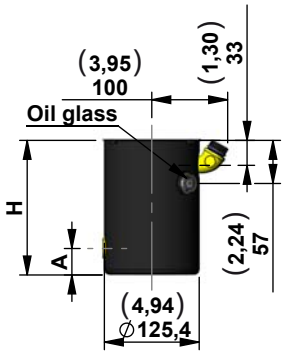

Code	Tank capacity l (USgal)	Useable capacity l (USgal)	L mm (inch)	Type	Material Number
S03	5 (1,32)	4 (1,06)	219 (8,62)	K01K3976SE005	R932001941
S34	7 (1,85)	5,4 (1,43)	271 (10,67)	K01K3976SE041	R932001956
S04	8 (2,11)	6,6 (1,74)	323 (12,72)	K01K3976SE007	R932001943

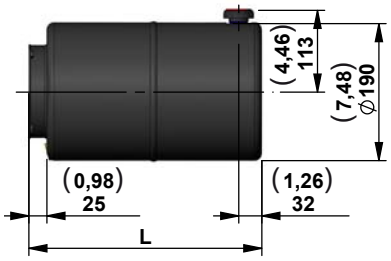

Code	Tank capacity l (USgal)	Useable capacity l (USgal)	H mm (inch)	Type	Material Number
S03V	5 (1,32)	3 (7,9)	219 (8,62)	K01K3976SE006	R932001942
S34V	7 (1,85)	4,4 (1,16)	271 (10,67)	K01K3976SE042	R932001957
S04V	8 (2,11)	5,8 (1,53)	323 (12,72)	K01K3976SE008	R932001944

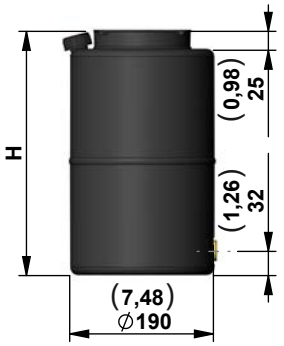

Code	Tank capacity l (USgal)	Useable capacity l (USgal)	Type	Material Number
S185	5 (1,32)	3 (7,9)	K01K3976SE345	R932007057

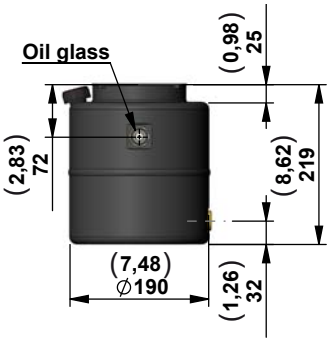

Steel Tanks

Code	Tank capacity l (USgal)	Useable capacity l (USgal)	Type	Material Number
S106	5 (1,32)	3 (7,9)	K01K3976SE215	R932001997
S108	8 (2,11)	5,8 (1,53)	K01K3976SE120	R932001971
S94	8 (2,11)	6,6 (1,74)	K01K3976SE106	R932001965

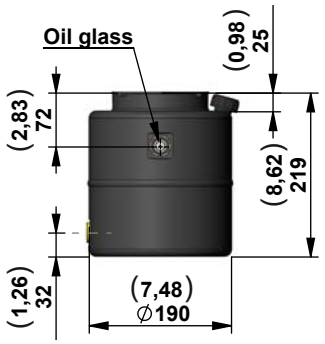

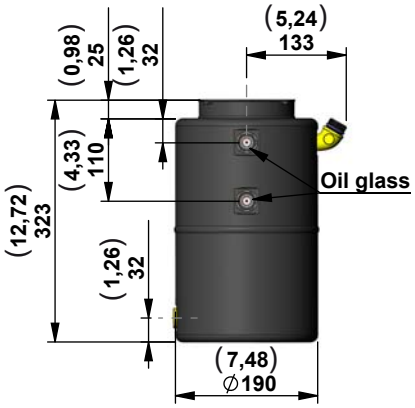

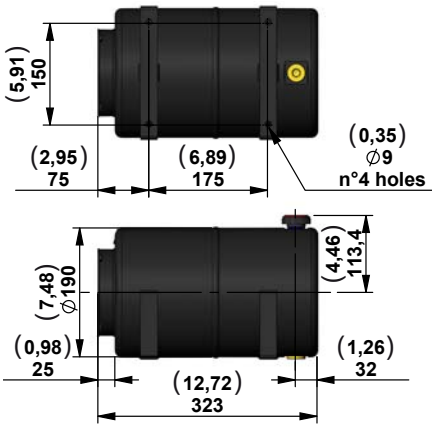

Code	Tank capacity l (USgal)	Useable capacity l (USgal)	Brackets	Type	Material Number
S07	6 (1,58)	4 (1,06)	No	K01K3976SE013	R932001945
S138*	6 (1,58)	4 (1,06)	Yes	K01K3976SE162	R932001977

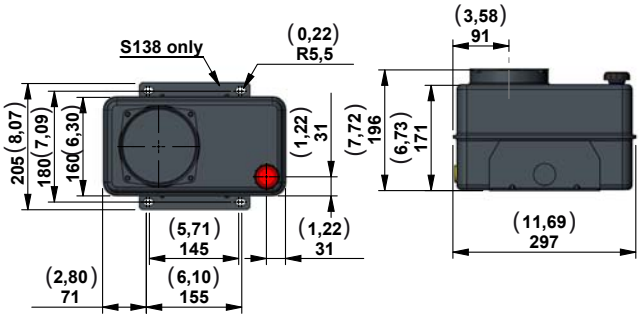

***Note** In order to avoid to support the weight of motor by the collar of the tank when the tanks with fixing brakets are used, it is strongly suggested to support also the central manifold.

Dimensions [mm (inches)]

Steel Tanks

Code	Tank capacity l (USgal)	Useable capacity l (USgal)	Brackets	Type	Material Number
S48	6 (1,58)	4 (1,06)	No	K01K3976SE056	R932001959
S139*	6 (1,58)	4 (1,06)	Yes	K01K3976SE163	R932001978

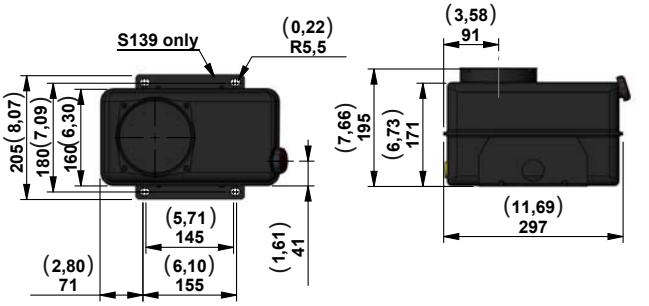

Code	Tank capacity l (USgal)	Useable capacity l (USgal)	A mm (inch)	B mm (inch)	Type	Material Number
S223*	8 (2,11)	6 (1,58)	156 (6,14)	131 (5,16)	K01K3976SE253	R932002013
S54	12 (3,17)	9,5 (2,51)	210 (8,27)	186 (7,32)	K01K3976SE063	R932001960
S140*	12 (3,17)	9,5 (2,51)	210 (8,27)	186 (7,32)	K01K3976SE164	R932001979

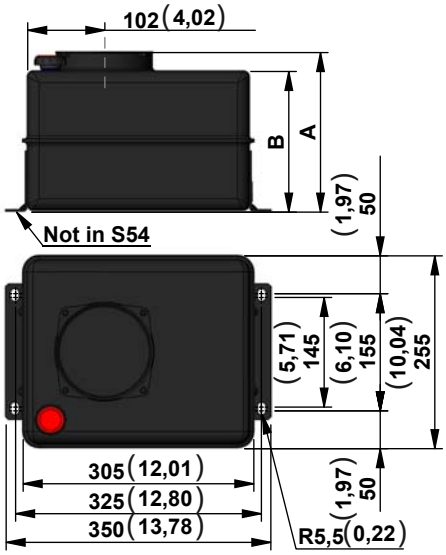

***Note** In order to avoid to support the weight of motor by the collar of the tank when the tanks with fixing brakets are used, it is strongly suggested to support also the central manifold.

Mounting position

Code		Code		Code	
O1	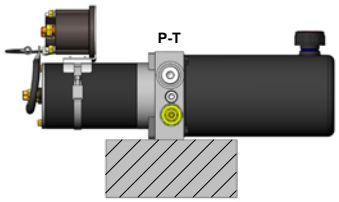	O3	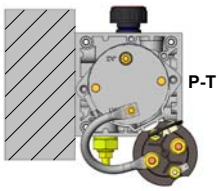	V1	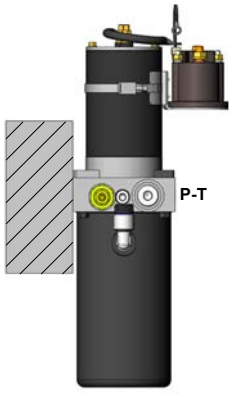
O2	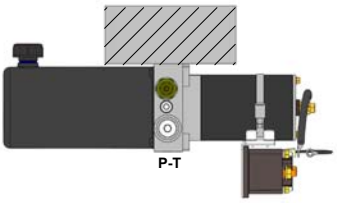	O4	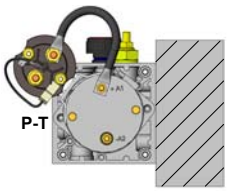		
-	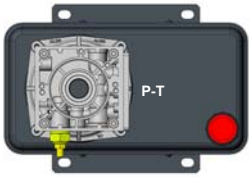	O6	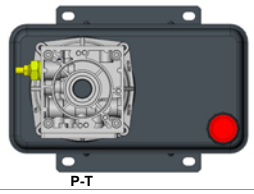		
O7		O8	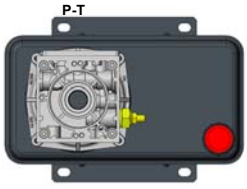		

Terminal Box Position for A.C. Motors

-	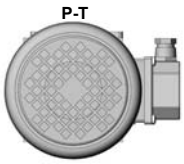	M2	
M3	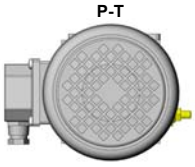	M4	

Relay Position for D.C. Motors

-	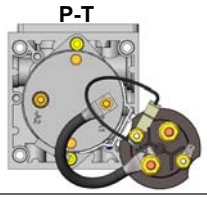	R2	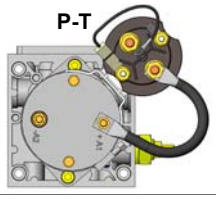
R3	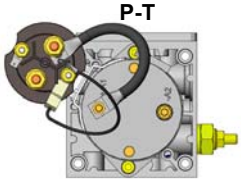	R4	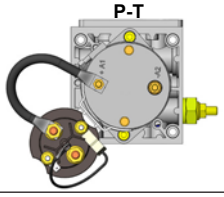

Oil Cap Position for V1 only

Code		Code	
-	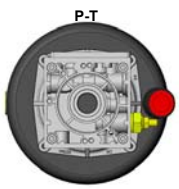	LU	
LO	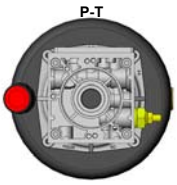	LP	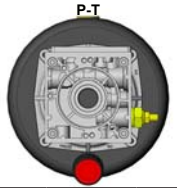

Mounting Brackets

Support for Manifold ME - MR Series

Code	Central manifold	Type	Material number		
G06	ME	K01X331518000	R932000734	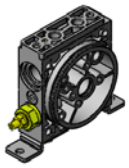	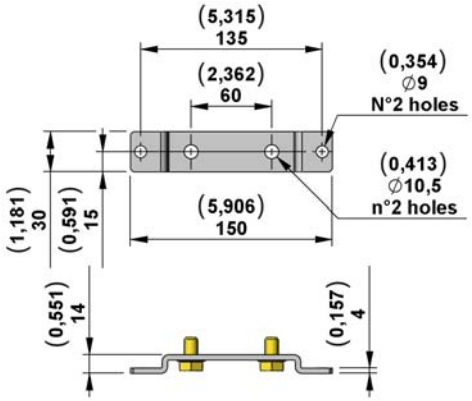

Support for Manifold Code A16

Code	Central manifold	Type	Material number		
G07	K	K01K331507000	R932009393		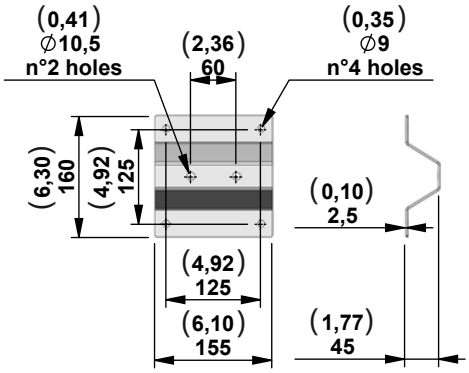
G07L	K	K01K331507000	R932009393		

Modular Stackable Elements

Space Modular Block

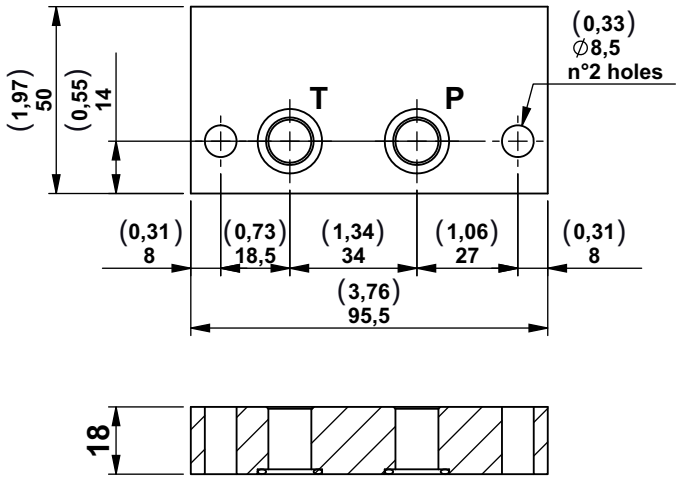

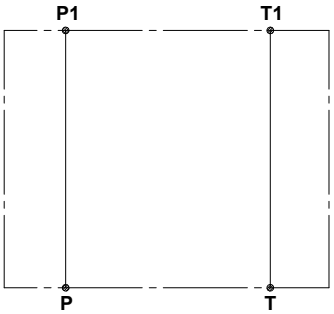

These modular blocks have been designed to have the ability to be assembled as a stack to allow clearence between flanges and motors of different sizes and types. Each block includes 2 OR 3056 gaskets.

Code	Description	Max working pressure bar (psi)	Max flow l/min (gpm)	Type	Material number
N09	Space modular block	300 (4351)	40 (10,57)	G386010000	R932001058

Motor IEC71 frame Coupling F90

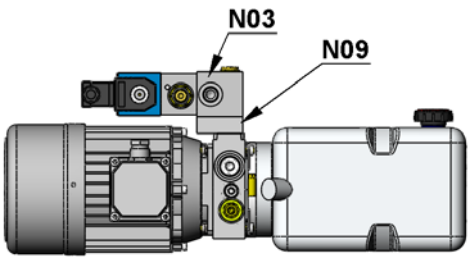

Motor IEC80 frame Coupling F95

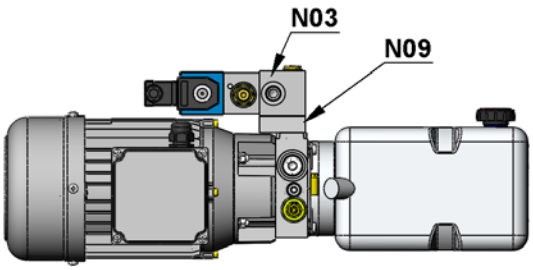

Dimensions [mm (inches)]

90° modular block allowing horizontal mounting (motor side)

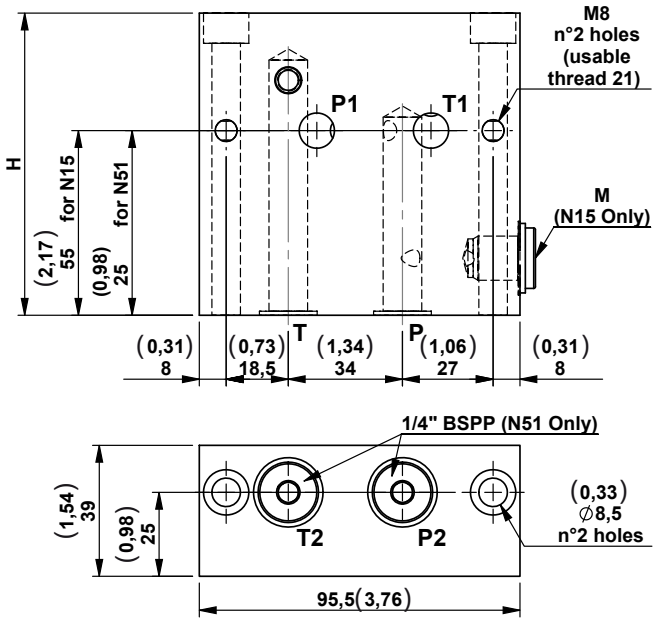

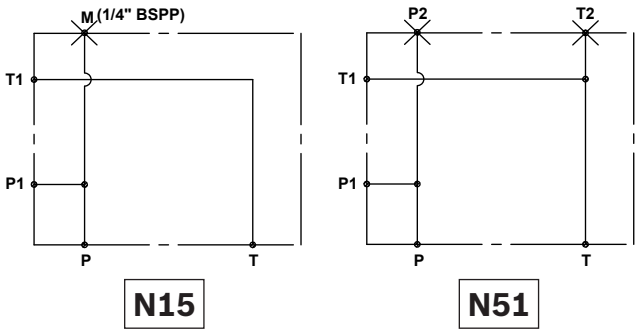

A modular block that is able to turn the standard assembling of 90°, in order to place other manifold blocks over the motor.
The “N15” block has a 1/4” BSPP port for Pressure Gauge.
Each block includes 2 OR 2056 gaskets.

Code	Description	Max working pressure bar (psi)	Max flow l/min (gpm)	Type	Material number
N15	90° modular block allowing horizontal mounting (motor side) **H=90**	300 (4351)	35 (9,25)	G386014000	R932001087
N51	90° modular block allowing horizontal mounting (motor side) **H=60**	300 (4351)	35 (9,25)	G386050000	R932001146

Motor IEC71 frame Coupling F90

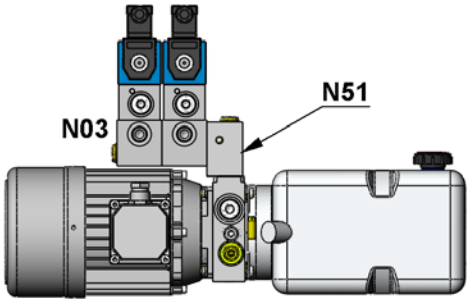

Motor IEC80 frame Coupling F95

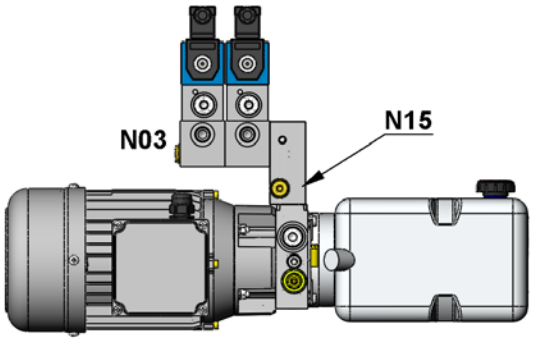

90° modular block allowing horizontal mounting (tank side)

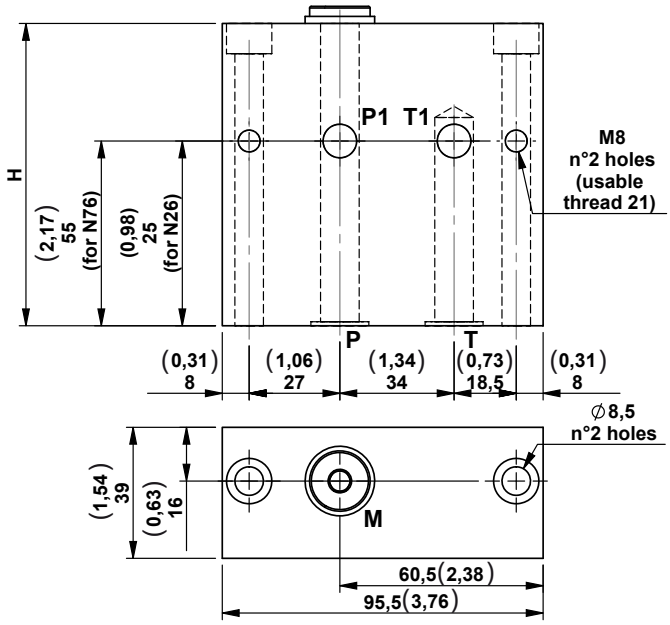

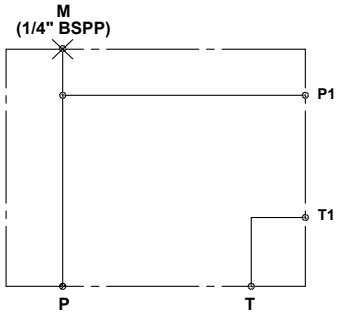

A modular block that is able to turn the standard assembling of 90°, in order to place other blocks over the tank.
The blocks have a 1/4” BSPP port for Pressure Gauge.
Each block includes 2 OR 2056 gaskets.

Code	Description	Max working pressure bar (psi)	Max flow l/min (gpm)	Type	Material number
N76	90° modular block allowing horizontal mounting (tank side) **H=90**	300 (4351)	35 (9,25)	G386075000	R932001153
N26	90° modular block allowing horizontal mounting (tank side) **H=60**	300 (4351)	35 (9,25)	G386025000	R932001100

Tank H=134

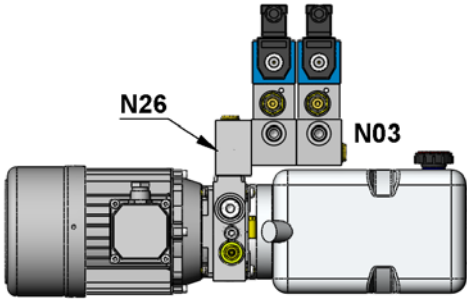

Tank Diameter Ø190

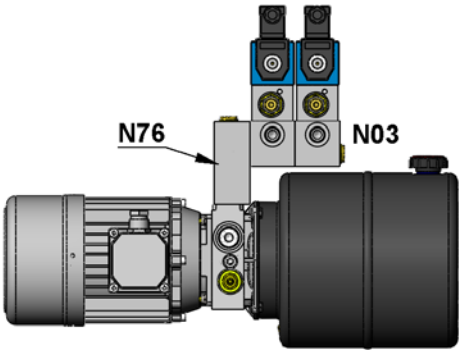

Dimensions [mm (inches)]

Modular blocks with threaded ports

Modular blocks with exit 3/8” BSPP.

Each block includes 2 OR 2056 gaskets.

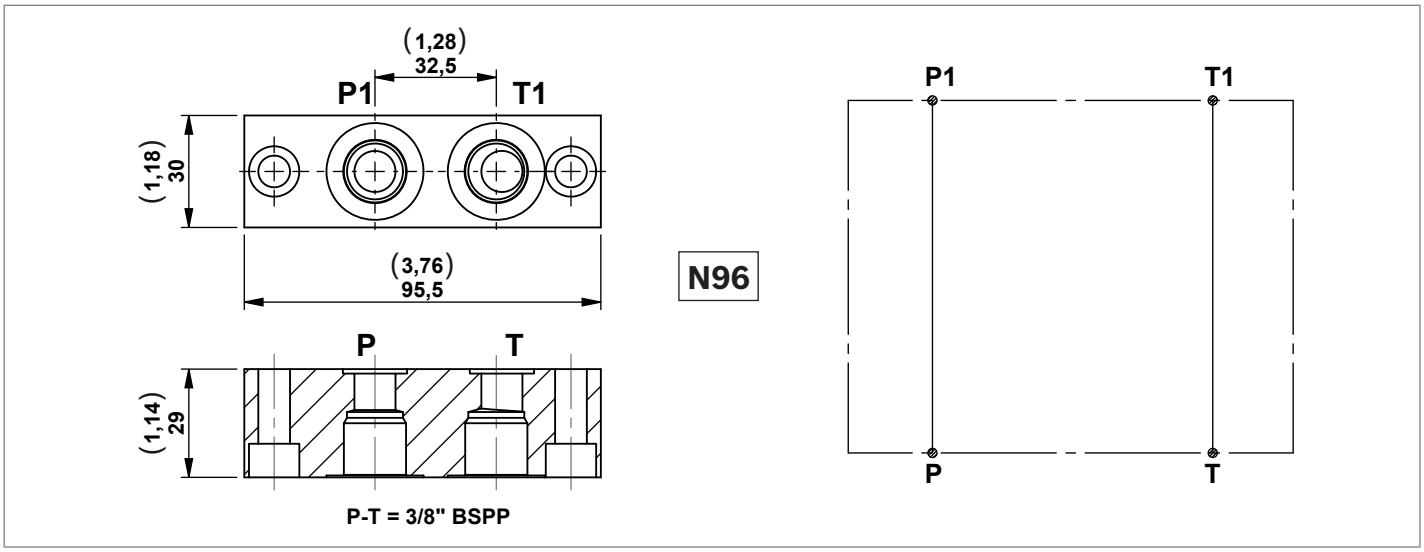

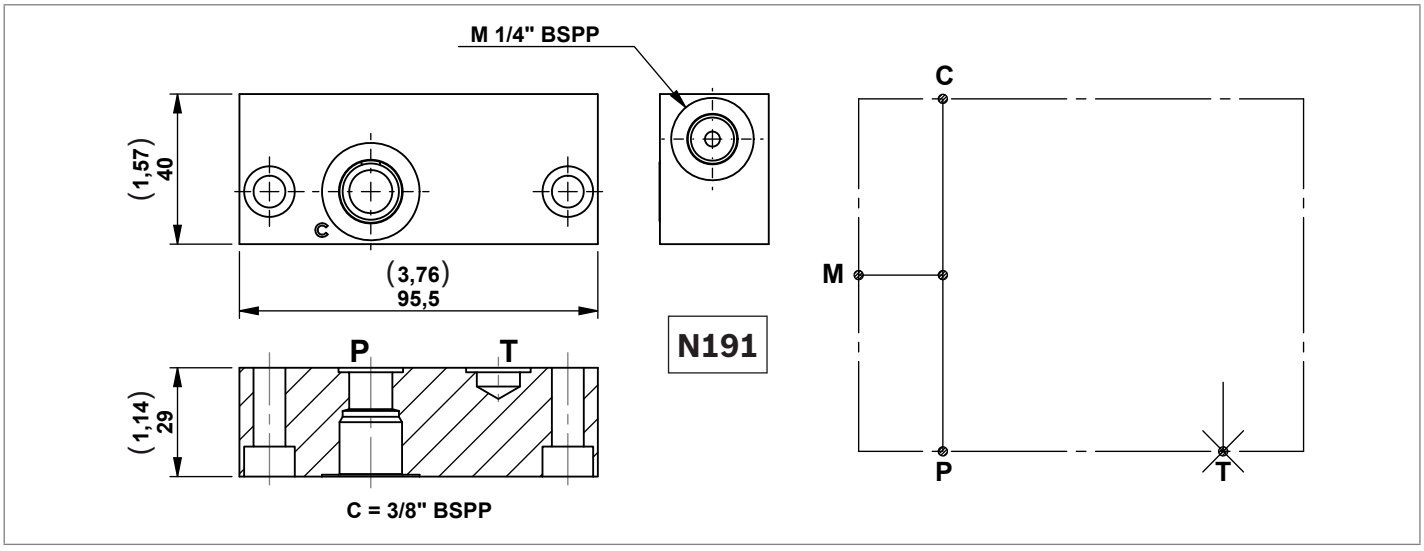

Code	Description	Max working pressure bar (psi)	Max flow l/min (gpm)	Type	Material number
N96	Modular block with threaded ports	300 (4351)	35 (9,25)	G386095000	R932001173
N191	Modular block with threaded ports	300 (4351)	35 (9,25)	G386191000	R932001284

Modular spacer block with extra “P1” port

A modular block with an extra port.

Each block includes 2 OR 2056 gaskets.

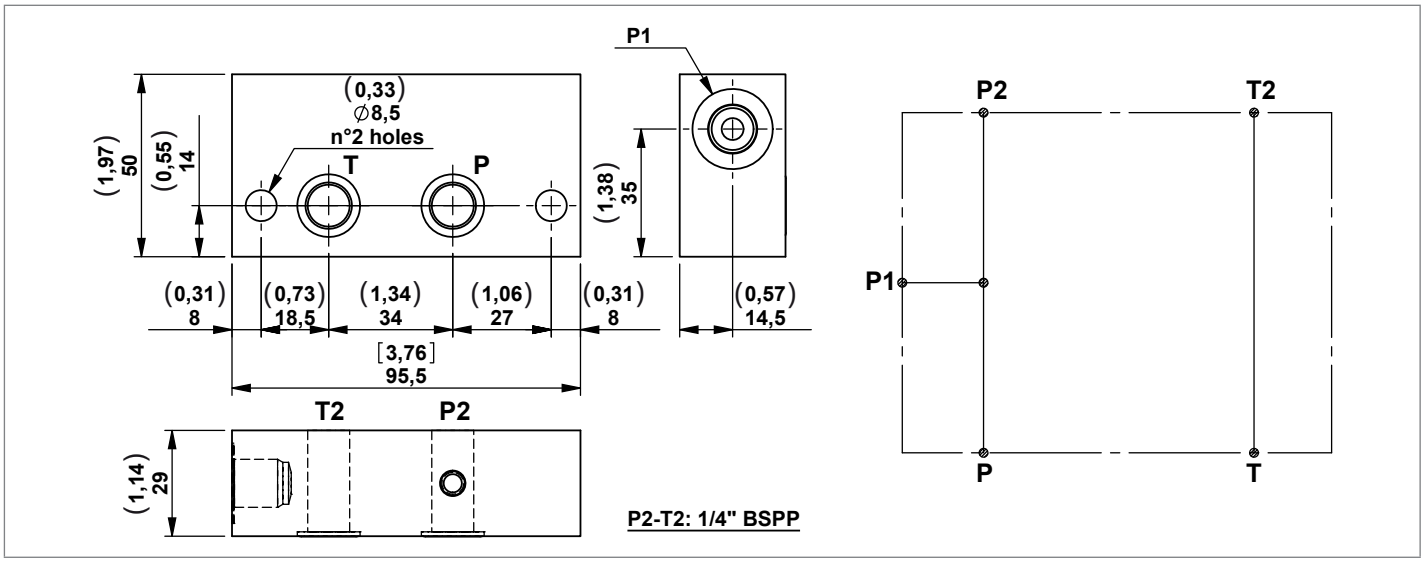

Code	Description	Max working pressure bar (psi)	Max flow l/min (gpm)	Type	Material number
N46-14	Modular spacer block with extra "P1" **port 1/4"** BSPP	300 (4351)	20 (5,28)	G386045000	R932001142
N46-38	Modular spacer block with extra "P1" **port 3/8"** BSPP	300 (4351)	20 (5,28)	1386000053	R932009506

Modular spacer block with two 1/8” BSPP and two 1/4” BSPP ports

A modular block with 4 extra ports.

Each block includes 2 OR 2056 gaskets.

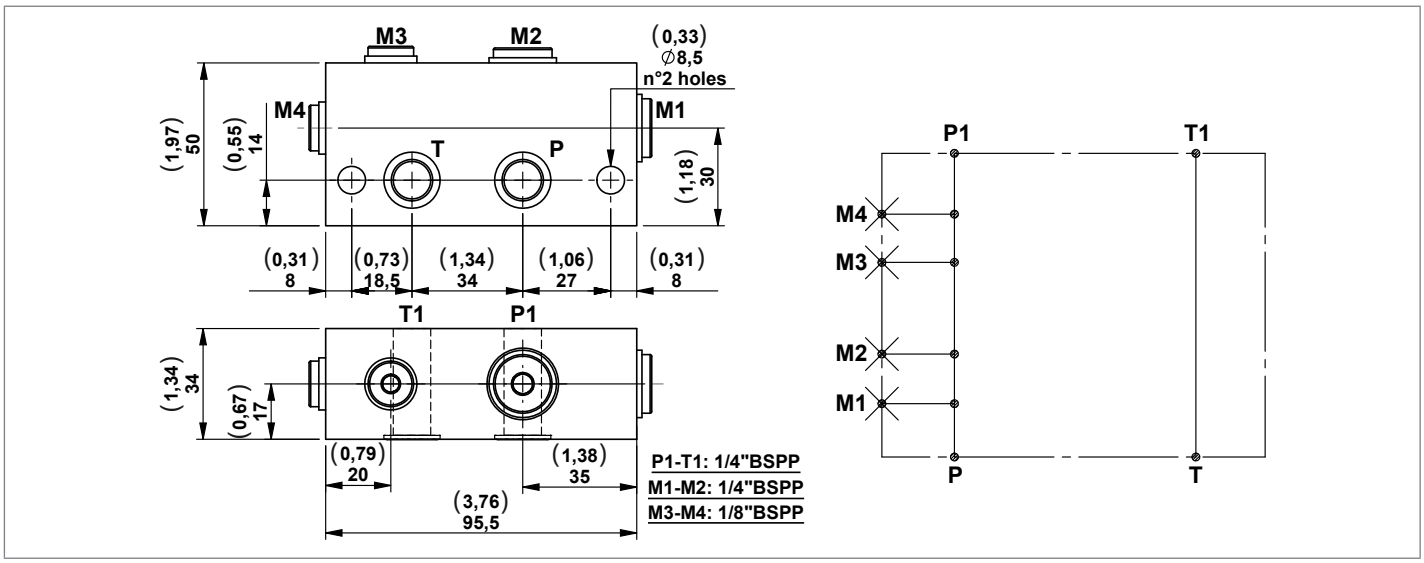

Code	Description	Max working pressure bar (psi)	Max flow l/min (gpm)	Type	Material number
N128	Modular spacer plock with two 1/8" BSPP ports and two 1/4" BSPP ports	300 (4351)	35 (9,25)	G386128000	R932001241

Modular block with filter on pressure line

A modular block with a filter on the pressure line. This is recommended for applications where valve may be subjected to contamination.
Each block includes 2 OR 2056 gaskets.

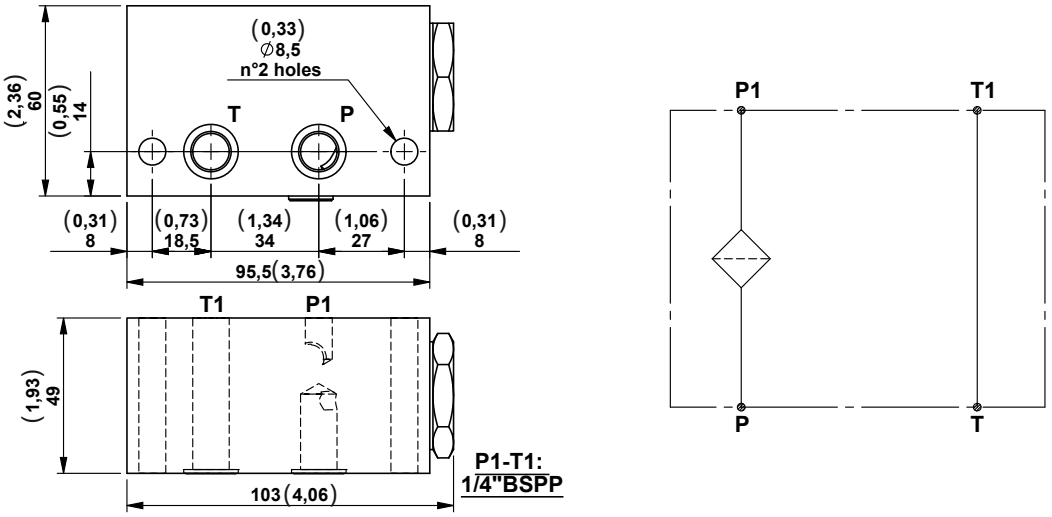

Code	Description	Max working pressure bar (psi)	Max flow l/min (gpm)	Type	Material number
N39-25	Modular block with filter (**25 micron**) on pressure line	230 (3336)	10 (2,64)	G386038010	R932001123
N39-60	Modular block with filter (**60 micron**) on pressure line	230 (3336)	10 (2,64)	G386038020	R932001124

Modular block with filter on the return line

A modular block with filter on return line. This is recommended for applications where valves may be subjected to contamination.
Each block includes 2 OR 2056 gaskets.
By-pass valve set at a pressure of 1 bar.

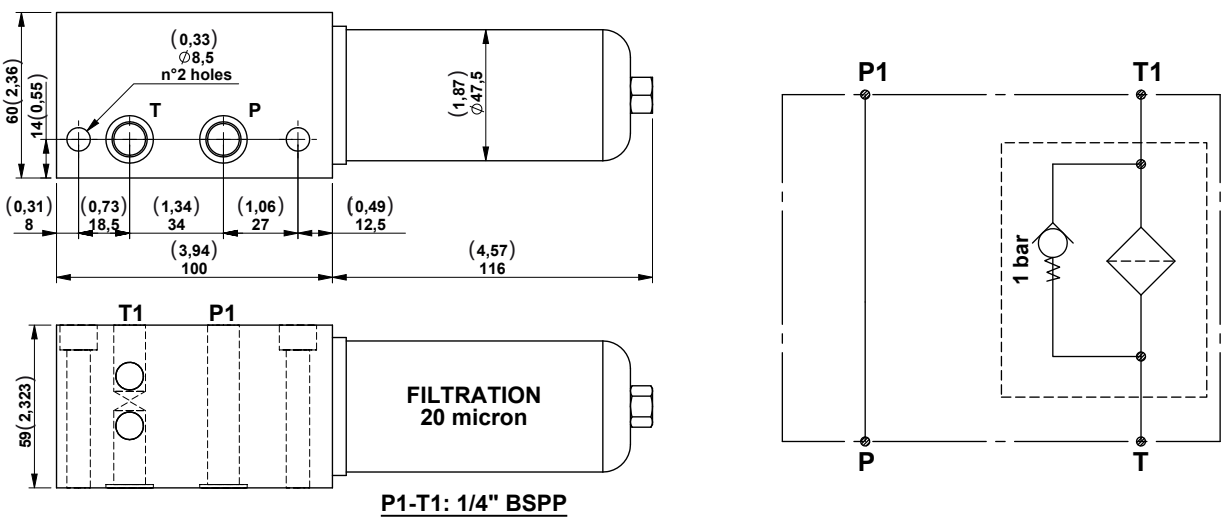

Code	Description	Max working pressure bar (psi)	Max flow l/min (gpm)	Type	Material number
N116	Modular block with filter on the return line (20 micron)	6 (87)	20 (5,28)	G386116010	R932001214

Modular block for CETOP 3 (2143) configuration valves

Modular blocks for CETOP 3 (2143) electrovalves for parallel or series circuits.

Each block includes 2 OR 2056 gaskets.

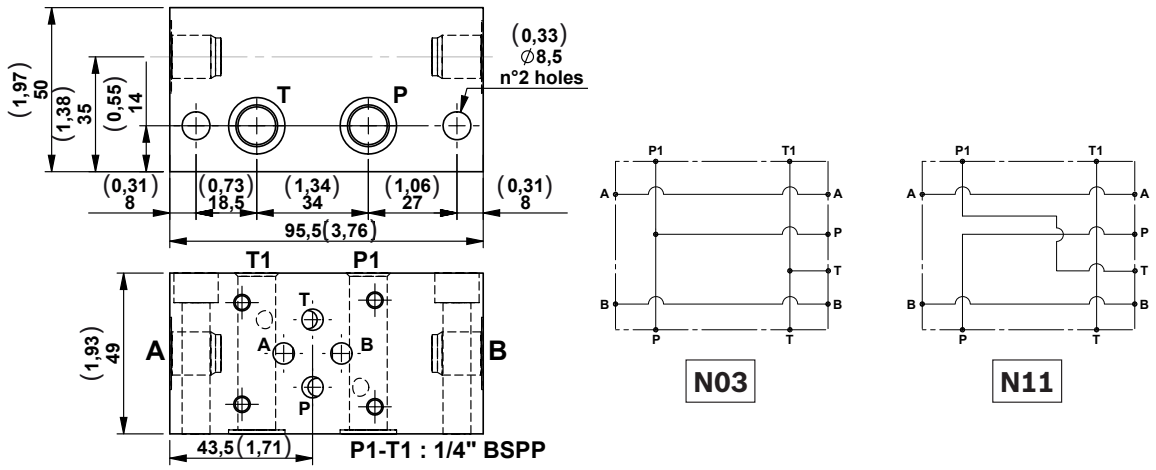

Code	Description	Max working pressure bar (psi)	Max flow l/min (gpm)	Type	Material number
N03-14	Modular block for CETOP3 (2143) configuration valves with A-B **1/4"** BSPP (**parallel circuit**)	300 (4351)	40 (10,57)	G386002010	R932001010
N03-38	Modular block for CETOP3 (2143) configuration valves with A-B **3/8"** BSPP (**parallel circuit**)	300 (4351)	40 (10,57)	G386002020	R932001011
N11-14	Modular block for CETOP3 (2143) configuration valves with A-B **1/4"** BSPP (**series circuit**)	300 (4351)	40 (10,57)	G386009010	R932001054
N11-38	Modular block for CETOP3 (2143) configuration valves with A-B **3/8"** BSPP (**series circuit**)	300 (4351)	40 (10,57)	G386009020	R932001056

Modular block for CETOP 3 (2143) configuration valves

A modular block that is for CETOP 3 (2143) electrovalves for a parallel circuit with ports on the oppsite side of the valve.

Each block includes 2 OR 2056 gaskets.

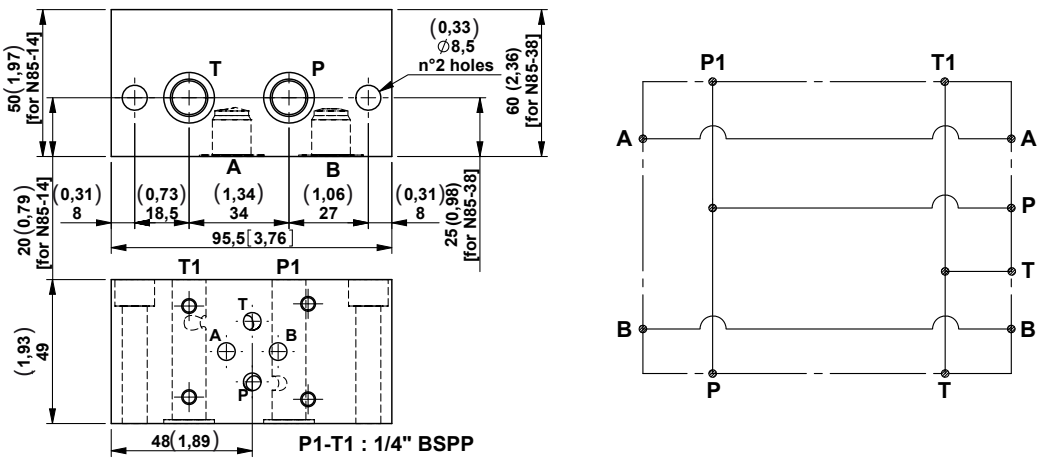

Code	Description	Max working pressure bar (psi)	Max flow l/min (gpm)	Type	Material number
N85-14	Modular block for CETOP3 (2143) configuration valves with A-B **1/4"** BSPP (parallel circuit)	300 (4351)	40 (10,57)	G386084010	R932001158
N85-38	Modular block for CETOP3 (2143) configuration valves with A-B **3/8"** BSPP (parallel circuit)	300 (4351)	40 (10,57)	G386084020	R932001159

Dimensions [mm (inches)]

Modular block for CETOP 3 (2143) configuration valves with side ports

A modular block that is for CETOP 3 (2143) electrovalves for parallel circuit with side device ports on one face.

Each block includes 2 OR 2056 gaskets.

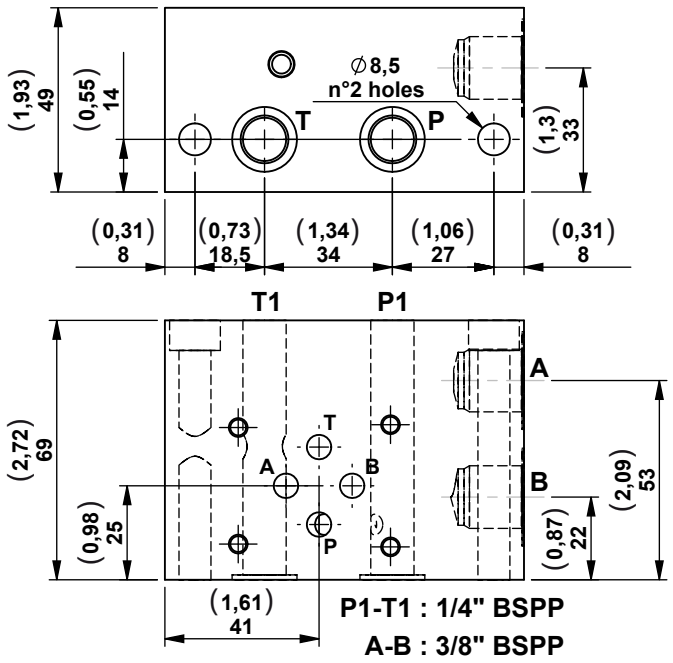

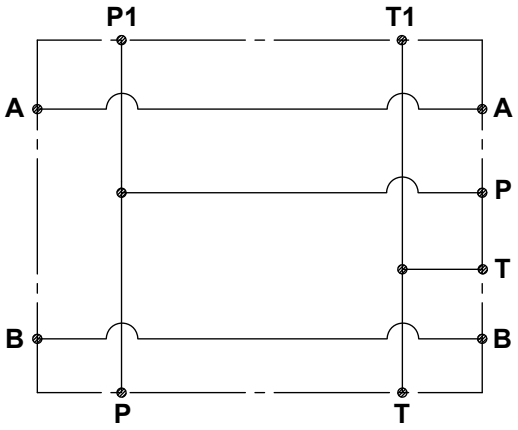

Code	Description	Max working pressure bar (psi)	Max flow l/min (gpm)	Type	Material number
N142	Modular block for CETOP 3 (2143) confuguration valves with side ports	300 (4351)	40 (10,57)	G386142000	R932001252

Modular block with poppet type P.O. check valves for CETOP 3 (2143) configuration valves (parallel circuit)

A selection of modular block with P.O. check valves for block CETOP 3 (2143) electrovalves.

Each block includes 2 OR 2056 gaskets.

Possibility to have an OR gasket on the piloting piston for application with low flow.

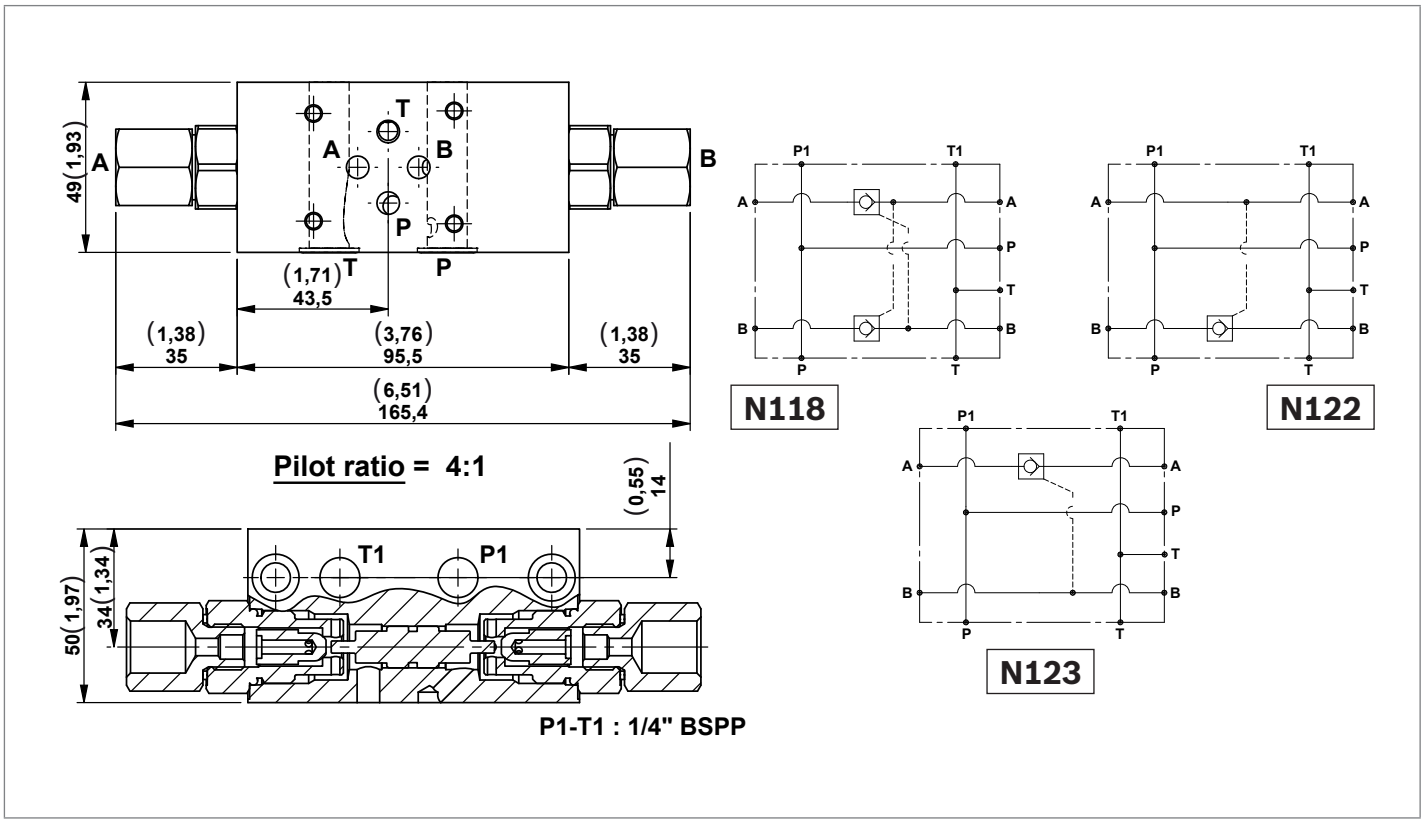

Code	Description	Max working pressure bar (psi)	Max flow l/min (gpm)	Type	Material number
N118-38	Modular block with poppet type P.O. check valves on A-B for CETOP 3 (2143) configuration valves (**without O-ring** on pilot piston and A-B **3/8"** BSPP)	300 (4351)	20 (5,28)	G386118A02	R932001217
N118G-38	Modular block with poppet type P.O. check valves on A-B for CETOP 3 (2143) configuration valves (**with O-ring** on pilot piston and A-B **3/8"** BSPP)	300 (4351)	20 (5,28)	G386118B02	R932001222
N118-14	Modular block with poppet type P.O. check valves on A-B for CETOP 3 (2143) configuration valves (**without O-ring** on pilot piston and A-B **1/4"** BSPP)	300 (4351)	20 (5,28)	G386118A03	R932001218
N118G-14	Modular block with poppet type P.O. check valves on A-B for CETOP 3 (2143) configuration valves (**with O-ring** on pilot piston and A-B **1/4"** BSPP)	300 (4351)	20 (5,28)	G386118B03	R932001223
N122-38	Modular block with poppet type P.O. check valve on B for CETOP 3 (2143) configuration valves (**without O-ring** on pilot piston and A-B **3/8"** BSPP)	300 (4351)	20 (5,28)	G386122A02	R932001233
N122-14	Modular block with poppet type P.O. check valve on B for CETOP 3 (2143) configuration valves (**without O-ring** on pilot piston and A-B **1/4"** BSPP)	300 (4351)	20 (5,28)	G386122A01	R932001232
N123-38	Modular block with poppet type P.O. check valves on A for CETOP 3 (2143) configuration valves (**without O-ring** on pilot piston and A-B **3/8"** BSPP)	300 (4351)	20 (5,28)	G386123A02	R932001237
N123-14	Modular block with poppet type P.O. check valves on A for CETOP 3 (2143) configuration valves (**without O-ring** on pilot piston and A-B **1/4"** BSPP)	300 (4351)	20 (5,28)	G386123A01	R932001236

Sandwich blocks with poppet type “VM25“ relief valves for CETOP 3 (2143) configuration valves

Each block includes 4 OR 108 gaskets.

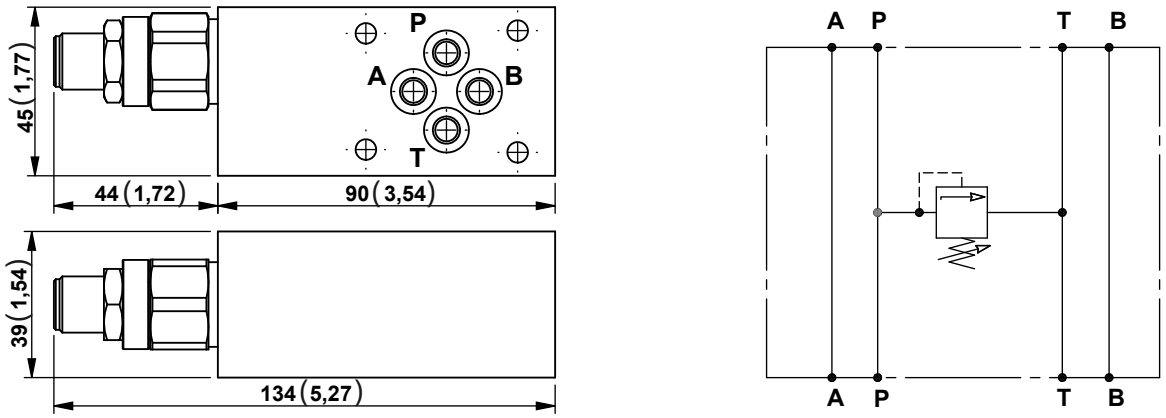

Code	Description	Max working pressure bar (psi)	Max flow l/min (gpm)	Type	Material number
N99-10	Sandwich block with poppet type "VM25" relief valve P in T (**10-100 bar**) for CETOP3 (2143) configuration valves	300 (4351)	25 (6,60)	G386098A81	R932001174
N99-20	Sandwich block with poppet type "VM25" relief valve P in T (**40-200 bar**) for CETOP3 (2143) configuration valves	300 (4351)	25 (6,60)	G386098A82	R932001175
N99-35	Sandwich block with poppet type "VM25" relief valve P in T (**70-350 bar**) for CETOP3 (2143) configuration valves	300 (4351)	25 (6,60)	G386098A83	R932001176

Sandwich blocks with poppet type “VM25“ relief valves for CETOP 3 (2143) configuration valves

Each block includes 4 OR 108 gaskets.

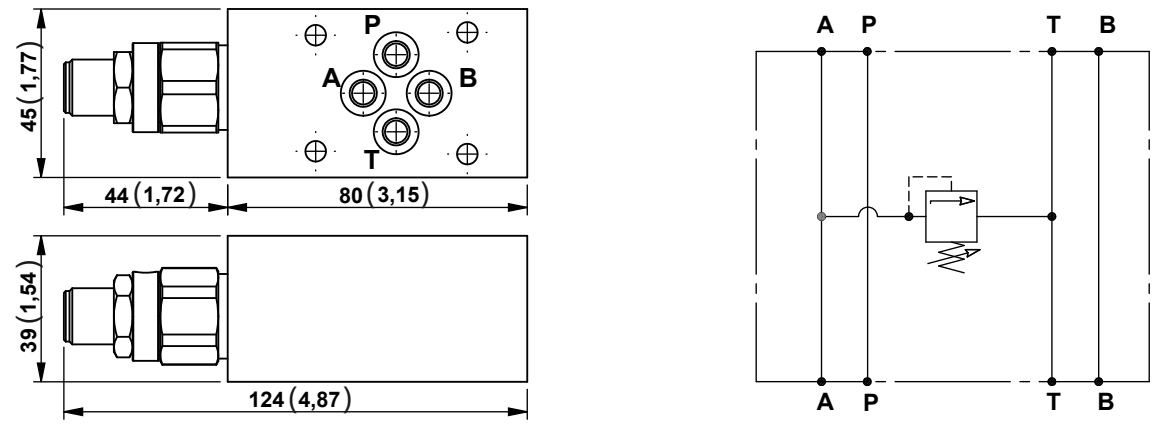

Code	Description	Max working pressure bar (psi)	Max flow l/min (gpm)	Type	Material number
N100-05	Sandwich block with poppet type "VM25" relief valve A in T (**5-50 bar**) for CETOP3 (2143) configuration valves	300 (4351)	25 (6,60)	G386099A84	R932001183
N100-10	Sandwich block with poppet type "VM25" relief valve A in T (**10-100 bar**) for CETOP3 (2143) configuration valves	300 (4351)	25 (6,60)	G386099A81	R932001180
N100-20	Sandwich block with poppet type "VM25" relief valve A in T (**40-200 bar**) for CETOP3 (2143) configuration valves	300 (4351)	25 (6,60)	G386099A82	R932001181
N100-35	Sandwich block with poppet type "VM25" relief valve A in T (**70-350 bar**) for CETOP3 (2143) configuration valves	300 (4351)	25 (6,60)	G386099A83	R932001182

Sandwich blocks with poppet type “VM25“ relief valves for CETOP 3 (2143) configuration valves

Each block includes 4 OR 108 gaskets.

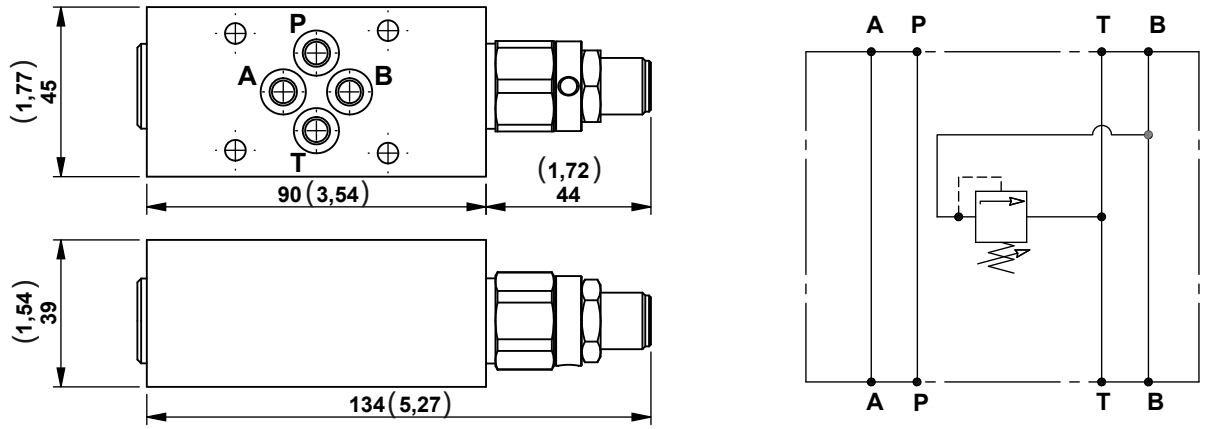

Code	Description	Max working pressure bar (psi)	Max flow l/min (gpm)	Type	Material number
N101-05	Sandwich block with poppet type "VM25" relief valve B in T (**5-50 bar**) for CETOP3 (2143) configuration valves	300 (4351)	25 (6,60)	G386101A84	R932001191
N101-10	Sandwich block with poppet type "VM25" relief valve B in T (**10-100 bar**) for CETOP3 (2143) configuration valves	300 (4351)	25 (6,60)	G386101A81	R932001188
N101-20	Sandwich block with poppet type "VM25" relief valve B in T (**40-200 bar**) for CETOP3 (2143) configuration valves	300 (4351)	25 (6,60)	G386101A82	R932001189
N101-35	Sandwich block with poppet type "VM25" relief valve B in T (**70-350 bar**) for CETOP3 (2143) configuration valves	300 (4351)	25 (6,60)	G386101A83	R932001190

Sandwich blocks with poppet type “VM25“ relief valves for CETOP 3 (2143) configuration valves

Each block includes 4 OR 108 gaskets.

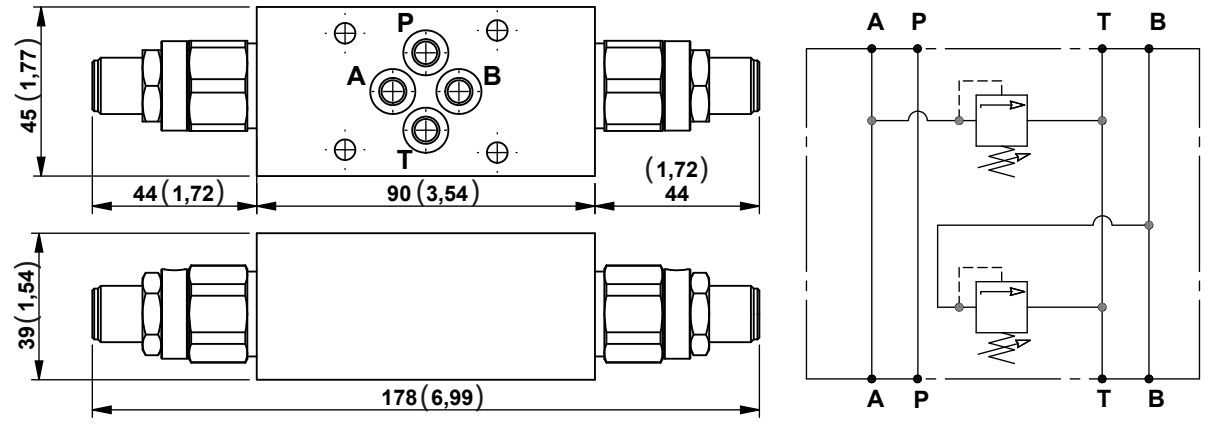

Code	Description	Max working pressure bar (psi)	Max flow l/min (gpm)	Type	Material number
N102-05	Sandwich block with poppet type "VM25" relief valves A-B in T (**5-50 bar**) for CETOP3 (2143) configuration valves	300 (4351)	25 (6,60)	G386102A84	R932001200
N102-10	Sandwich block with poppet type "VM25" relief valves A-B in T (**10-100 bar**) for CETOP3 (2143) configuration valves	300 (4351)	25 (6,60)	G386102A81	R932001196
N102-20	Sandwich block with poppet type "VM25" relief valves A-B in T (**40-200 bar**) for CETOP3 (2143) configuration valves	300 (4351)	25 (6,60)	G386102A82	R932001198
N102-35	Sandwich block with poppet type "VM25" relief valves A-B in T (**70-350 bar**) for CETOP3 (2143) configuration valves	300 (4351)	25 (6,60)	G386102A83	R932001199

Dimensions [mm (inches)]

Sandwich blocks with poppet type “VM25“ relief valves for CETOP 3 (2143) configuration valves

Each block includes 4 OR 108 gaskets.

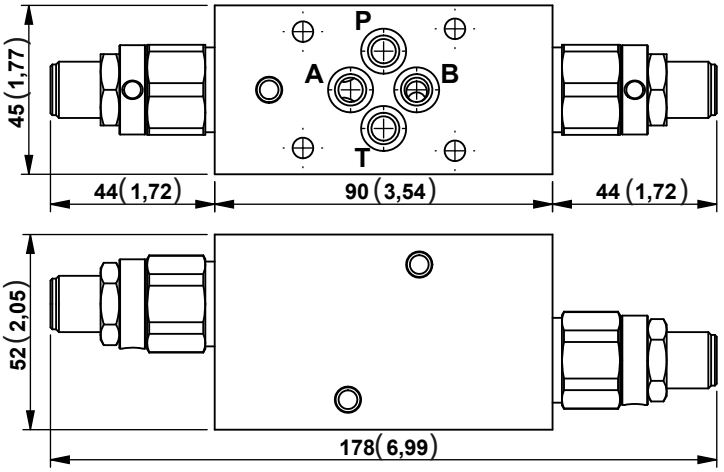

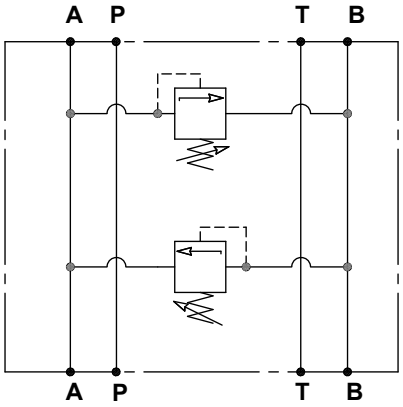

Code	Description	Max working pressure bar (psi)	Max flow l/min (gpm)	Type	Material number
N103-10	Sandwich block with poppet type "VM25" relief valves A in B and B in A (**10-100 bar**) for CETOP3 (2143) configuration valves	300 (4351)	25 (6,60)	G386103A81	R932001202
N103-20	Sandwich block with poppet type "VM25" relief valves A in B and B in A (**40-200 bar**) for CETOP3 (2143) configuration valves	300 (4351)	25 (6,60)	G386103A82	R932001203
N103-35	Sandwich block with poppet type "VM25" relief valves A in B and B in A (**70-350 bar**) for CETOP3 (2143) configuration valves	300 (4351)	25 (6,60)	G386103A83	R932001204

Sandwich blocks with “ST-CU-06” adjustable flow control valves for CETOP 3 (2143) configuration valves

Each block includes 4 OR 108 gaskets.

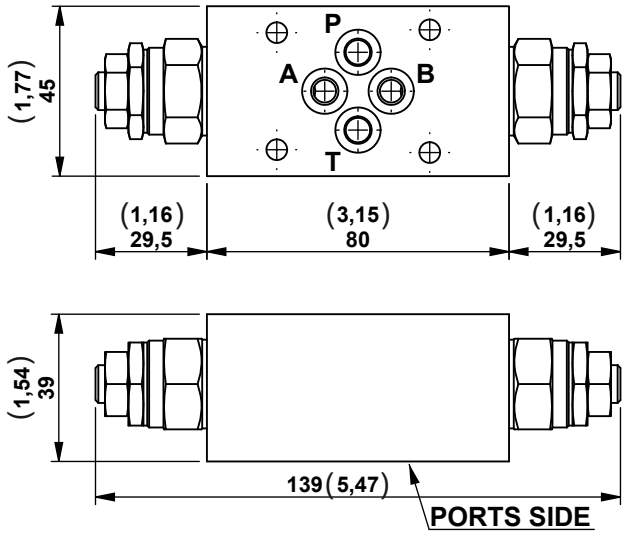

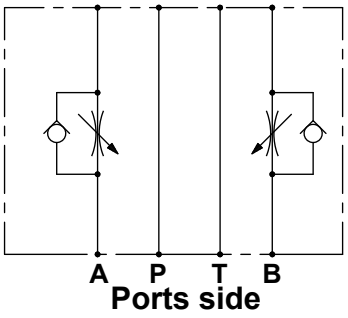

N78

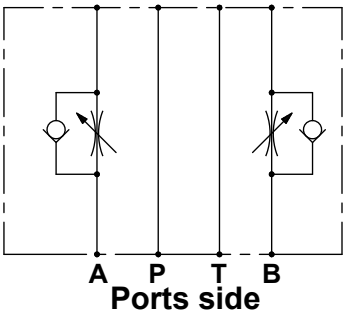

N104

Code	Description	Max working pressure bar (psi)	Max flow l/min (gpm)	Type	Material number
N78	Sandwich blocks with ST-CU-06 adjustable flow control valves (that **working on the return to the tank** of the A and B line) for CETOP 3 (2143) configuration valves	300 (4351)	25 (6,60)	G386077A81	R932001156
N104	Sandwich blocks with ST-CU-06 adjustable flow control valves (that **working on the delivery** of the A and B line) for CETOP 3 (2143) configuration valves	300 (4351)	25 (6,60)	G386104A80	R932001205

Dimensions [mm (inches)]

Sandwich blocks with “ST-CU-06” adjustable flow control valves for CETOP 3 (2143) configuration valves

Each block includes 4 OR 108 gaskets.

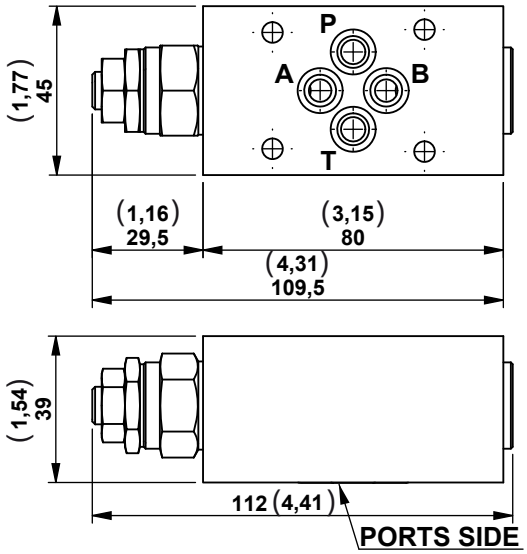

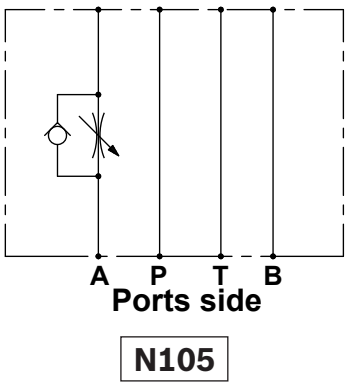

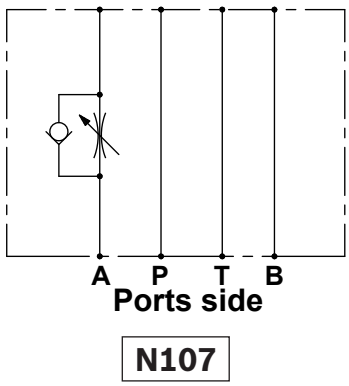

Code	Description	Max working pressure bar (psi)	Max flow l/min (gpm)	Type	Material number
N105	Sandwich blocks with ST-CU-06 adjustable flow control valves (that **working on the return to the tank** of the A line) for CETOP 3 (2143) configuration valves	300 (4351)	25 (6,60)	G386105A81	R932000183
N107	Sandwich blocks with ST-CU-06 adjustable flow control valves (that **working on the delivery** of the A line) for CETOP 3 (2143) configuration valves	300 (4351)	25 (6,60)	G386107A80	R932001211

Sandwich blocks with “ST-CU-06” adjustable flow control valves for CETOP 3 (2143) configuration valves

Each block includes 4 OR 108 gaskets.

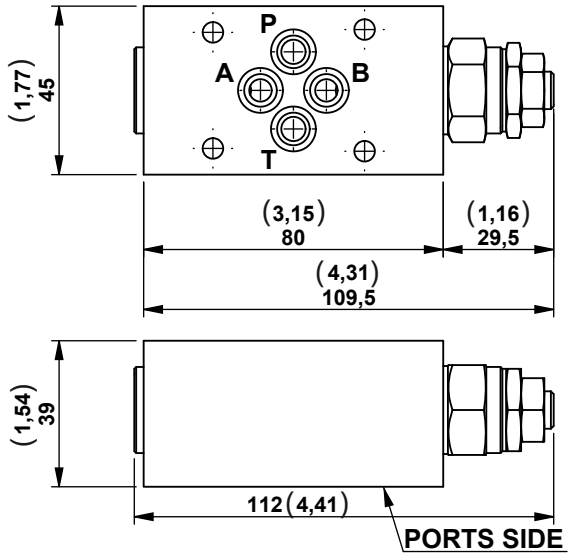

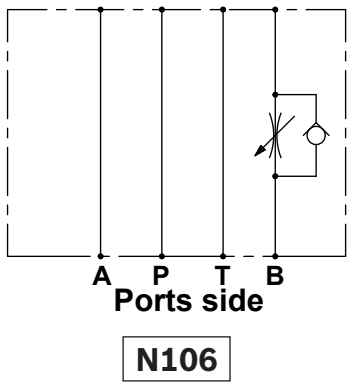

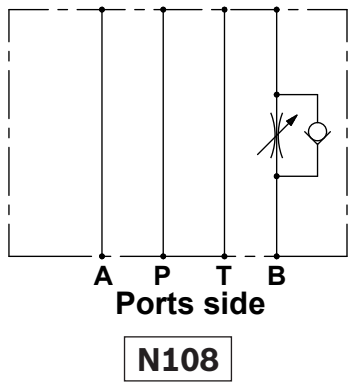

Code	Description	Max working pressure bar (psi)	Max flow l/min (gpm)	Type	Material number
N106	Sandwich blocks with ST-CU-06 adjustable flow control valves (that **working on the return to the tank** of the B line) for CETOP 3 (2143) configuration valves	300 (4351)	25 (6,60)	G386106A81	R932000184
N108	Sandwich blocks with ST-CU-06 adjustable flow control valves (that **working on the delivery** of the B line) for CETOP 3 (2143) configuration valves	300 (4351)	25 (6,60)	G386108A80	R932001212

Dimensions [mm (inches)]

Sandwich block with ports on “A” and “B” line for CETOP 3 (2143) configuration valves

Each block includes 2 OR 2056 gaskets.

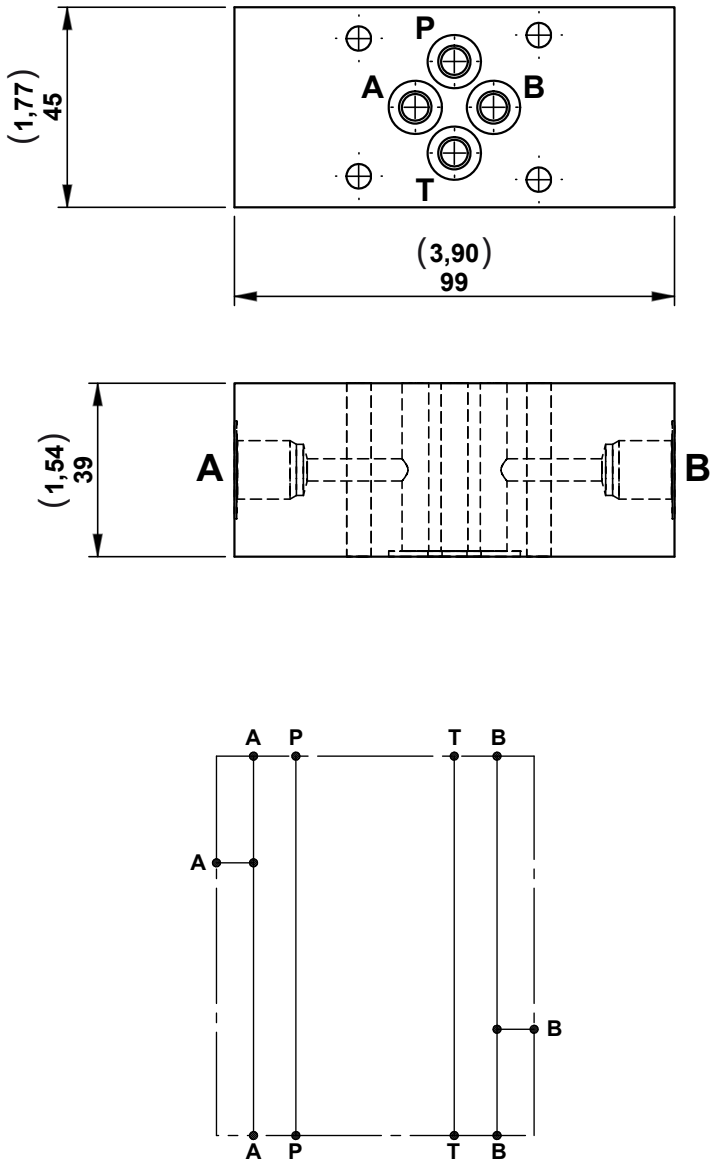

Code	Description	Max working pressure bar (psi)	Max flow l/min (gpm)	Type	Material number
N19-14	Sandwich block with **1/4"** BSPP ports on A and B line for CETOP3 (2143) configuration valves	300 (4351)	25 (6,60)	G386018010	R932001091

Sandwich blocks with overcenter valves for CETOP 3 (2143) configuration valves

Each block includes 4 OR 108 gaskets.

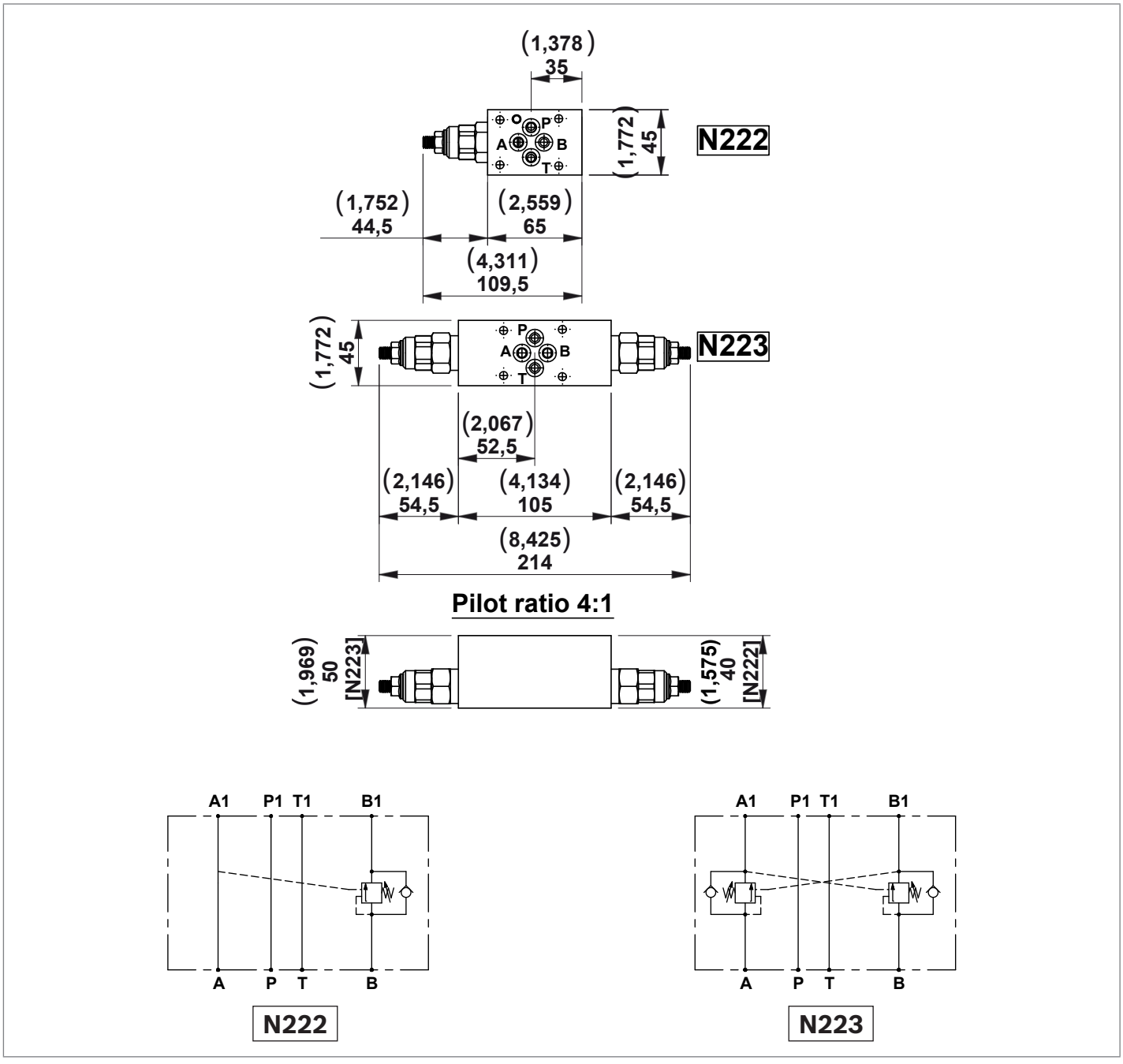

Code	Description	Max working pressure bar (psi)	Max flow l/min (gpm)	Type	Material number
N222.20	Sandwich block with Overcentre valve VBSN-08AA (**100-210 bar**) **on B** line for CETOP3	300 (4351)	30 (7,93)	G386222002	R932001326
N222.35	Sandwich block with Overcentre valve VBSN-08AA (**200-350 bar**) **on B** line for CETOP3	300 (4351)	30 (7,93)	G386222003	R932001327
N223.20	Sandwich block with Overcentre valves VBSN-08AA (**100-210 bar**) **on A and B** line for CETOP3	300 (4351)	30 (7,93)	G386223002	R932001329
N223.35	Sandwich block with Overcentre valves VBSN-08AA (**200-350 bar**) **on A and B** line for CETOP3	300 (4351)	30 (7,93)	G386223003	R932001330

Modular hand pump manifold block

A single acting hand pump usually used for emergency.

Each block includes 5 OR 2050 gaskets.

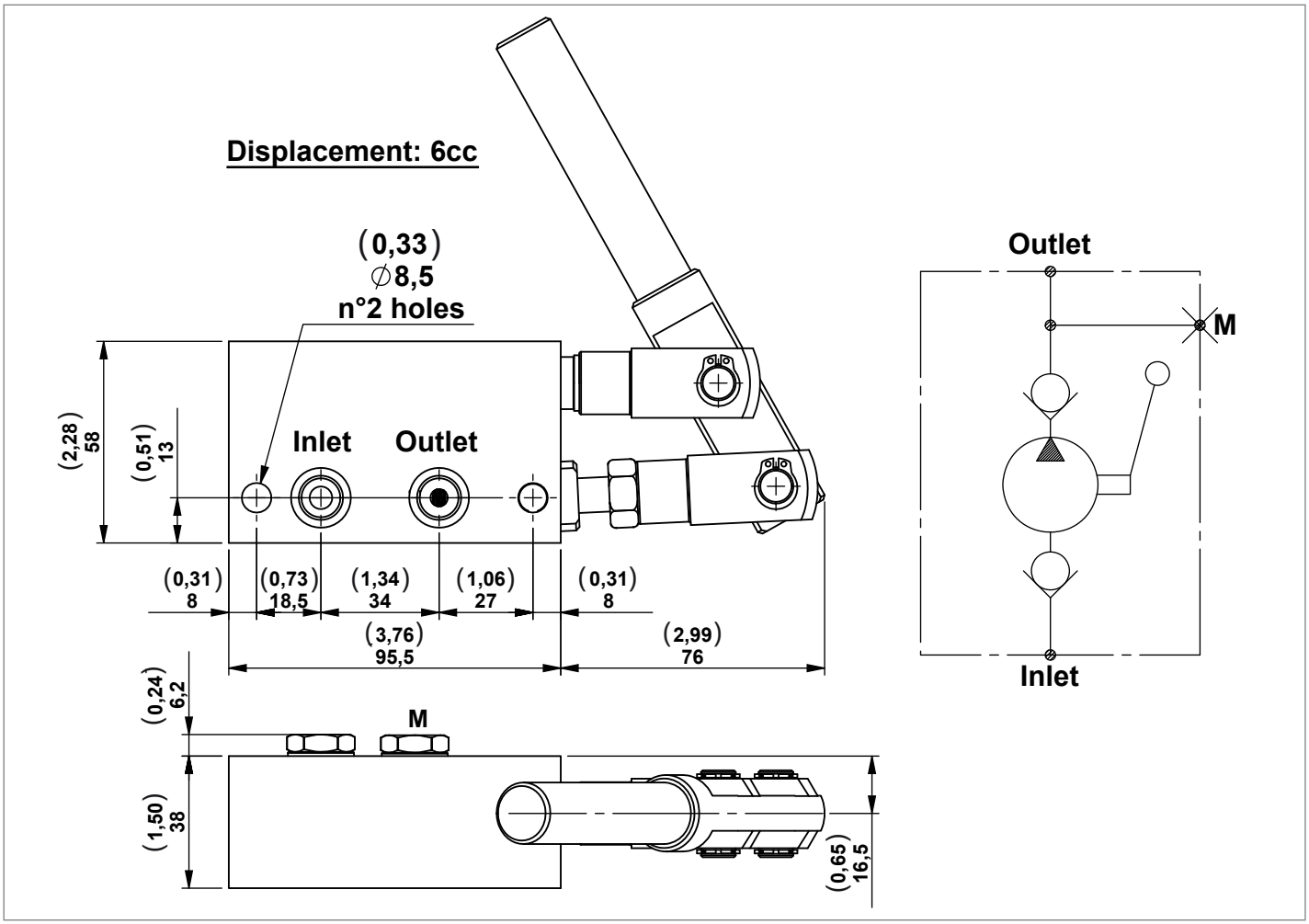

Code	Description	Max working pressure bar (psi)	Max flow l/min (gpm)	Type	Material number
N22	Modular hand pump manifold block	350 (5076)	-	G386021010	R932001093

Lever Kit

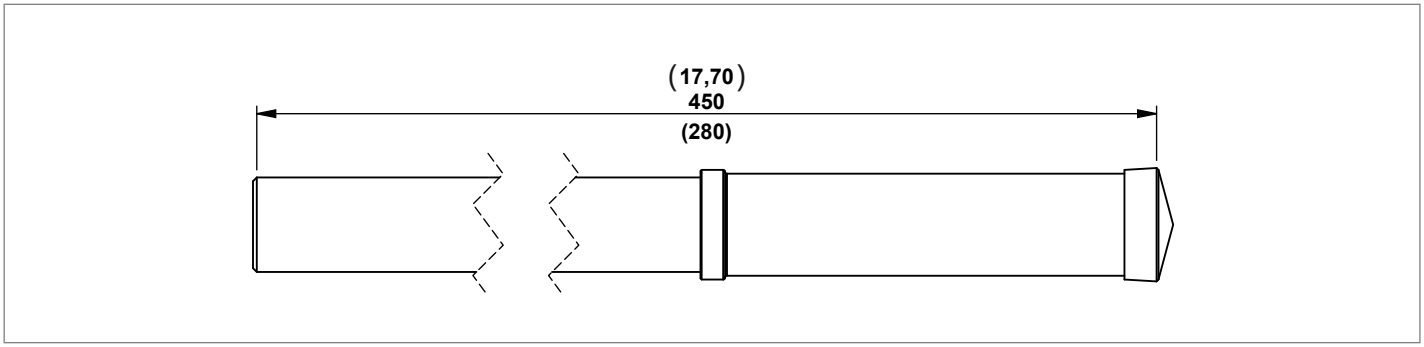

Description	Type	Material number
Lever L= 450	K250133000	R932002452
Lever L= 280	K2501S1058	R932002407

CETOP 2143 (Ø6mm (0,24inch)) Solenoid Valves

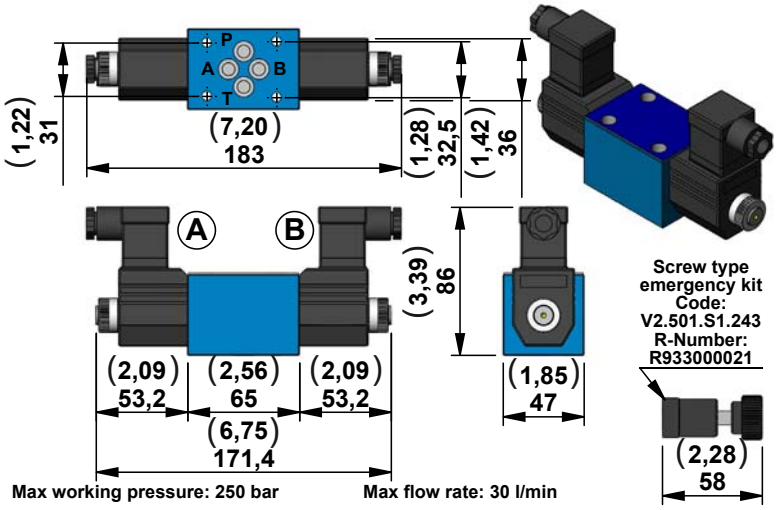

Code	Description	Max working pressure bar (psi)	Max flow l/min (gpm)	Material number	Diagram
E02Z-OB	CETOP3 solenoid valve 12V D.C.	250 (3626)	30 (7,92)	R933004275	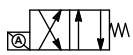
E02Z-OC	CETOP3 solenoid valve 24V D.C.	250 (3626)	30 (7,92)	R933004277	
E02Z-OV	CETOP3 solenoid valve 24V RAC	250 (3626)	30 (7,92)	R933004279	
E02Z-OZ	CETOP3 solenoid valve 220V RAC	250 (3626)	30 (7,92)	R933004281	
E06Z-OB	CETOP3 solenoid valve 12V D.C.	250 (3626)	30 (7,92)	R933004096	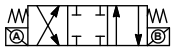
E06Z-OC	CETOP3 solenoid valve 24V D.C.	250 (3626)	30 (7,92)	R933004098	
E06Z-OD	CETOP3 solenoid valve 48V D.C.	250 (3626)	30 (7,92)	R933007830	
E06Z-OV	CETOP3 solenoid valve 24V RAC	250 (3626)	30 (7,92)	R933004102	
E06Z-OW	CETOP3 solenoid valve 110V RAC	250 (3626)	30 (7,92)	R933004103	
E06Z-OZ	CETOP3 solenoid valve 220V RAC	250 (3626)	30 (7,92)	R933004104	
E07Z-OB	CETOP3 solenoid valve 12V D.C.	250 (3626)	30 (7,92)	R933004131	
E07Z-OC	CETOP3 solenoid valve 24V D.C.	250 (3626)	30 (7,92)	R933004133	
E07Z-OD	CETOP3 solenoid valve 48V D.C.	250 (3626)	30 (7,92)	R933004135	
E07Z-OV	CETOP3 solenoid valve 24V RAC	250 (3626)	30 (7,92)	R933004136	
E07Z-OW	CETOP3 solenoid valve 110V RAC	250 (3626)	30 (7,92)	R933004137	
E07Z-OZ	CETOP3 solenoid valve 220V RAC	250 (3626)	30 (7,92)	R933004138	
E08Z-OB	CETOP3 solenoid valve 12V D.C.	250 (3626)	30 (7,92)	R933004191	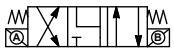
E08Z-OC	CETOP3 solenoid valve 24V D.C.	250 (3626)	30 (7,92)	R933004193	
E08Z-OD	CETOP3 solenoid valve 48V D.C.	250 (3626)	30 (7,92)	R933004197	
E08Z-OV	CETOP3 solenoid valve 24V RAC	250 (3626)	30 (7,92)	R933004198	
E08Z-OW	CETOP3 solenoid valve 110V RAC	250 (3626)	30 (7,92)	R933004199	
E08Z-OZ	CETOP3 solenoid valve 220V RAC	250 (3626)	30 (7,92)	R933004200	
E10Z-OB	CETOP3 solenoid valve 12V D.C.	250 (3626)	30 (7,92)	R933004057	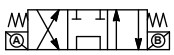
E10Z-OC	CETOP3 solenoid valve 24V D.C.	250 (3626)	30 (7,92)	R933004061	
E10Z-OD	CETOP3 solenoid valve 48V D.C.	250 (3626)	30 (7,92)	R933004063	
E10Z-OV	CETOP3 solenoid valve 24V RAC	250 (3626)	30 (7,92)	R933004065	
E10Z-OW	CETOP3 solenoid valve 110V RAC	250 (3626)	30 (7,92)	R933004067	
E10Z-OZ	CETOP3 solenoid valve 220V RAC	250 (3626)	30 (7,92)	R933004068	

Dimensions [mm (inches)]

Modular blocks with two lowering solenoid valves, check valves, and compensated flow control throttle valves (available upon request)

Modular blocks to operate a single acting cylinder in a parallel circuit or a double acting cylinder in regenerative.

Each block includes 2 OR 2056 gaskets.

Minimum voltage required: 90% of nominal.

Coils not included, must be ordered separately.

For the selection of coil model and voltage please refer to page 42.

For the selection of connectors please refer to page 44.

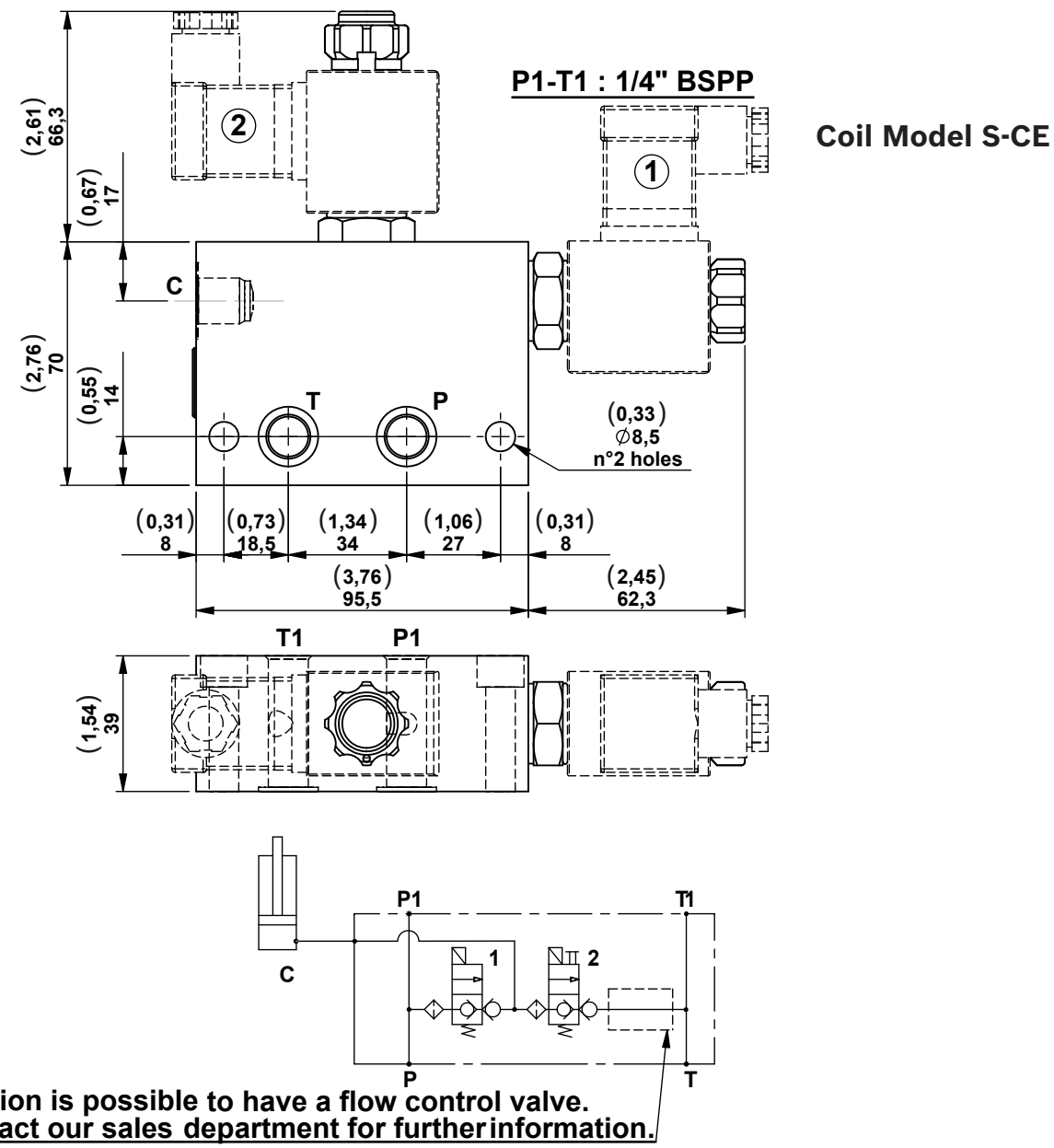

Code	Description	Max working pressure bar (psi)	Max flow l/min (gpm)	Type	Material number
V07-14	Modular block with 2 VE3-NC-VU with "C" port **1/4"** BSPP	250 (3626)	25 (6,60)	G386507010DC	R932001406
V07-38	Modular block with 2 VE3-NC-VU with "C" port **3/8"** BSPP	250 (3626)	25 (6,60)	G386507020DC	R932009707

Modular blocks with four way three position solenoid valve. Spool type

A selection of modular blocks with 4/3 spool type solenoid valve for small double acting cylinders.

Each block includes 2 OR 2056 gaskets.

Minimum voltage required: 90% of nominal.

Coils not included, must be ordered separately.

For the selection of coil model and voltage please refer to page 42.

For the selection of connectors please refer to page 44.

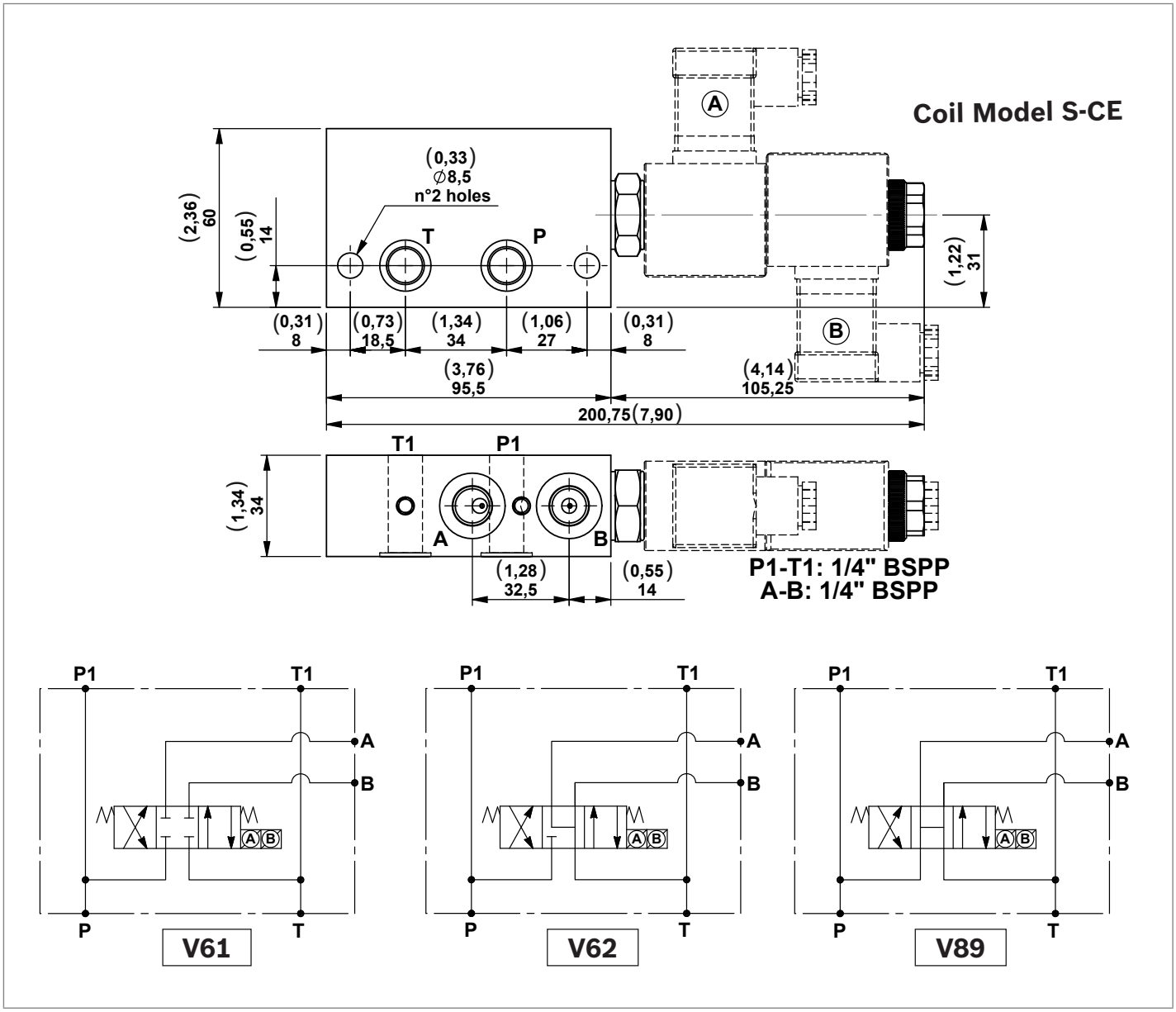

Code	Description	Max working pressure bar (psi)	Max flow l/min (gpm)	Type	Material number
V61	Modular block with 4 way 3 position solenoid valve (V4.3A)	210 (3046)	8 (2,11)	G386562010	R932001552
V62	Modular block with 4 way 3 position solenoid valve (V4.3B)	210 (3046)	8 (2,11)	G386563010	R932001556
V89	Modular block with 4 way 3 position solenoid valve (V4.3C)	210 (3046)	8 (2,11)	G386590010	R932001580

Dimensions [mm (inches)]

Modular block with four way three position solenoid valve and P.O. check valves on “A” and “B” line

A modular block with 4/3 spool type solenoid valve and P.O. check valves on “A” and “B” line. For small double acting cylinders.

Each block includes 2 OR 2056 gaskets.

Minimum voltage required: 90% of nominal.

Coils not included, must be ordered separately.

For the selection of coil model and voltage please refer to page 42.

For the selection of connectors please refer to page 44.

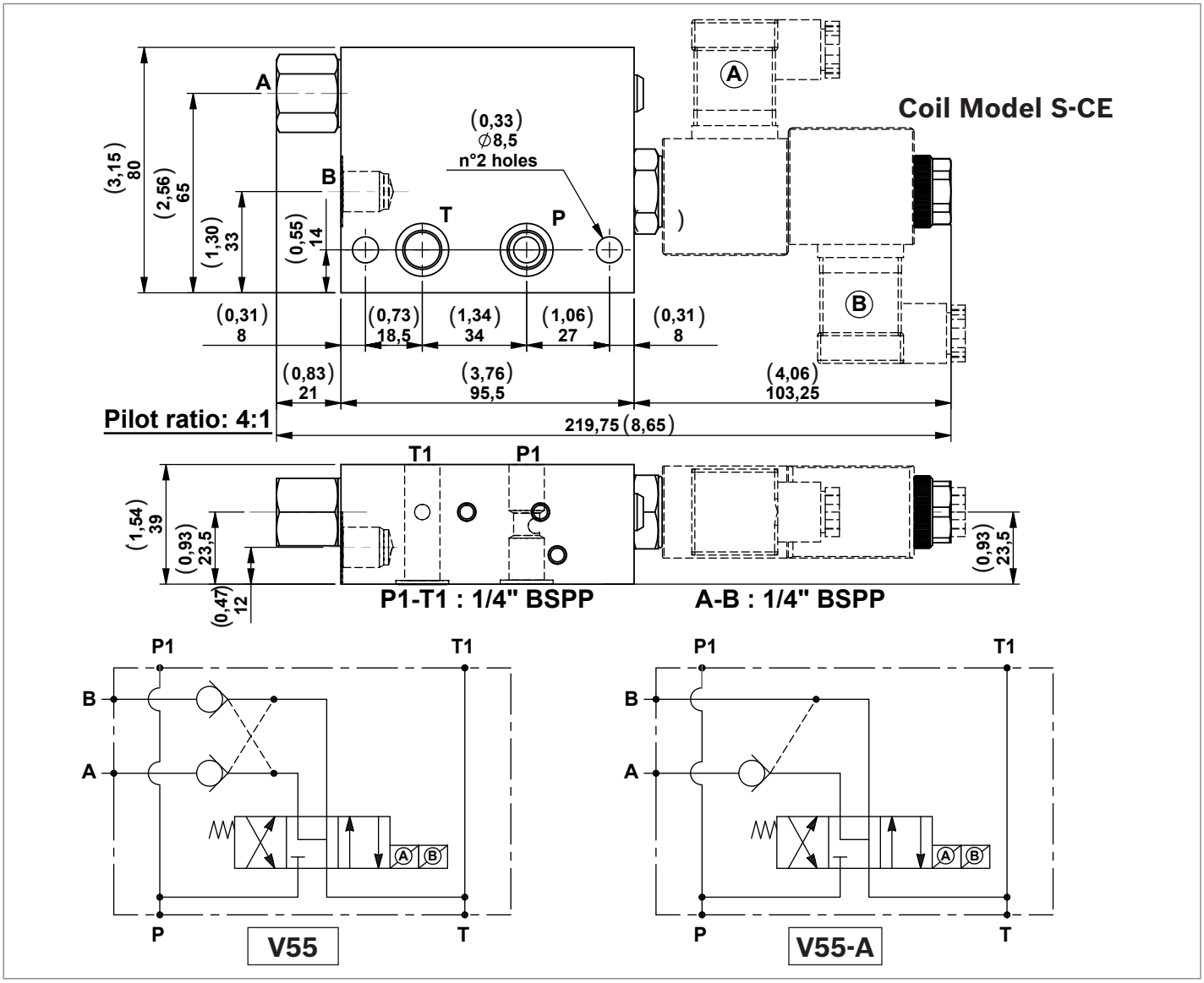

Code	Description	Max working pressure bar (psi)	Max flow l/min (gpm)	Type	Material number
V55	Modular block with 4 way 3 position solenoid valve and P.O. check valves on A and B **without O-Ring on pilot piston**	210 (3046)	8 (2,11)	G386591A10	R932001584
V55	Modular block with 4 way 3 position solenoid valve and P.O. check valves on A and B **with O-Ring on pilot piston**	210 (3046)	8 (2,11)	G386591B10	R932001589
V55/A	Modular block with 4 way 3 position solenoid valve and P.O. check valve on A **without O-Ring on pilot piston**	210 (3046)	8 (2,11)	G386591A1A	R932001581
V55/A	Modular block with 4 way 3 position solenoid valve and P.O. check valve on A **with O-Ring on pilot piston**	210 (3046)	8 (2,11)	G386591B1A	R932001586

Modular block with four way three position solenoid valve and P.O. check valves on “A” and “B” line

A modular block with 4/3 spool type solenoid valve and P.O. check valves on “A” and “B” line. For small double acting cylinders.

Each block includes 2 OR 2056 gaskets.

Minimum voltage required: 90% of nominal.

Coils not included, must be ordered separately.

For the selection of coil model and voltage please refer to page 42.

For the selection of connectors please refer to page 44.

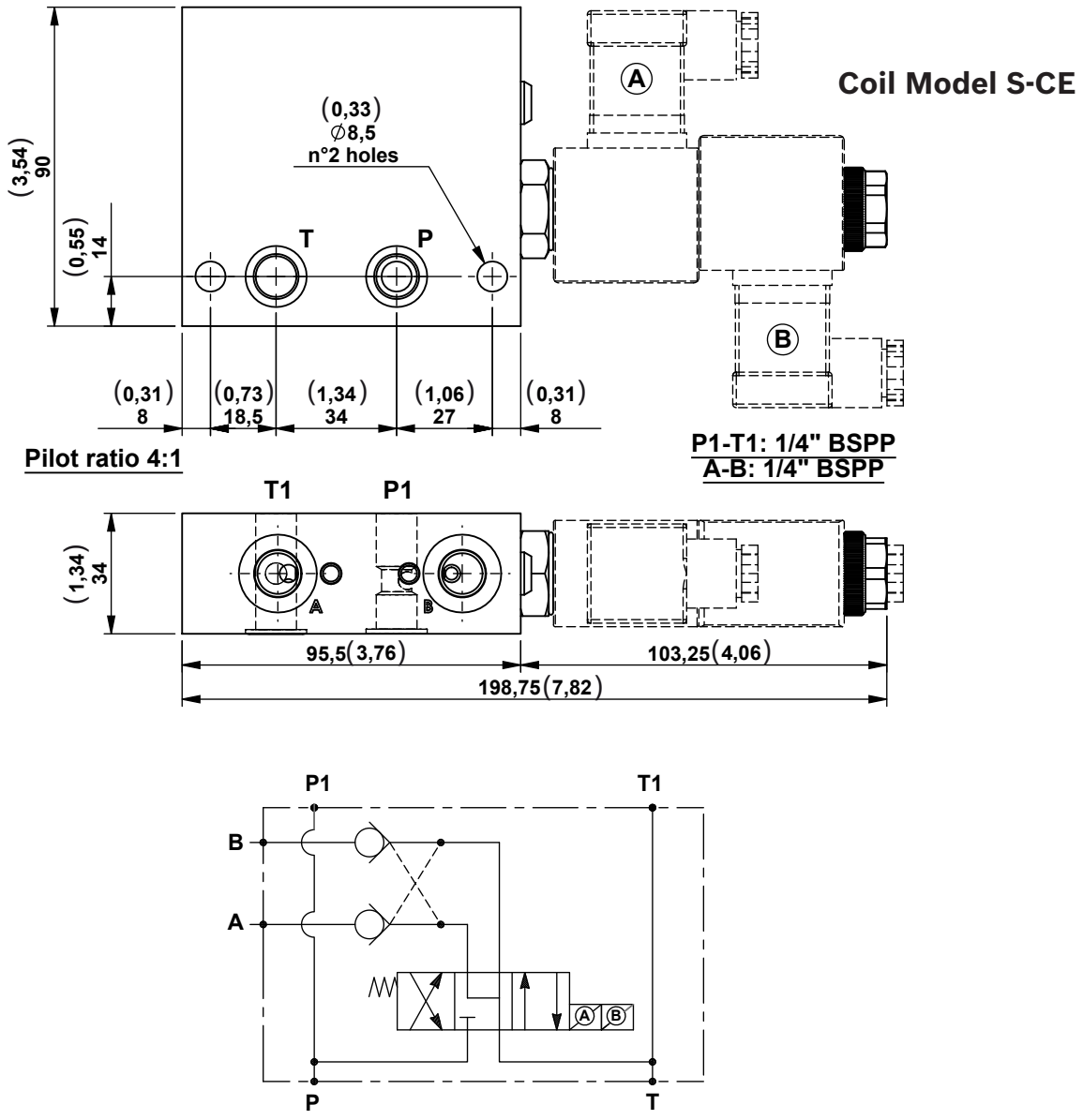

Code	Description	Max working pressure bar (psi)	Max flow l/min (gpm)	Type	Material number
V295	Modular block with four way three position solenoid valve and pilot operated check valves on "A" and "B" line	210 (3046)	8 (2,11)	1586500083	R932009708

Modular blocks with double locking solenoid valve

Each block includes 2 OR 2056 gaskets.

Coils not included, must be ordered separately.

For the selection of coil model and voltage please refer to page 42.

For the selection of connectors please refer to page 44.

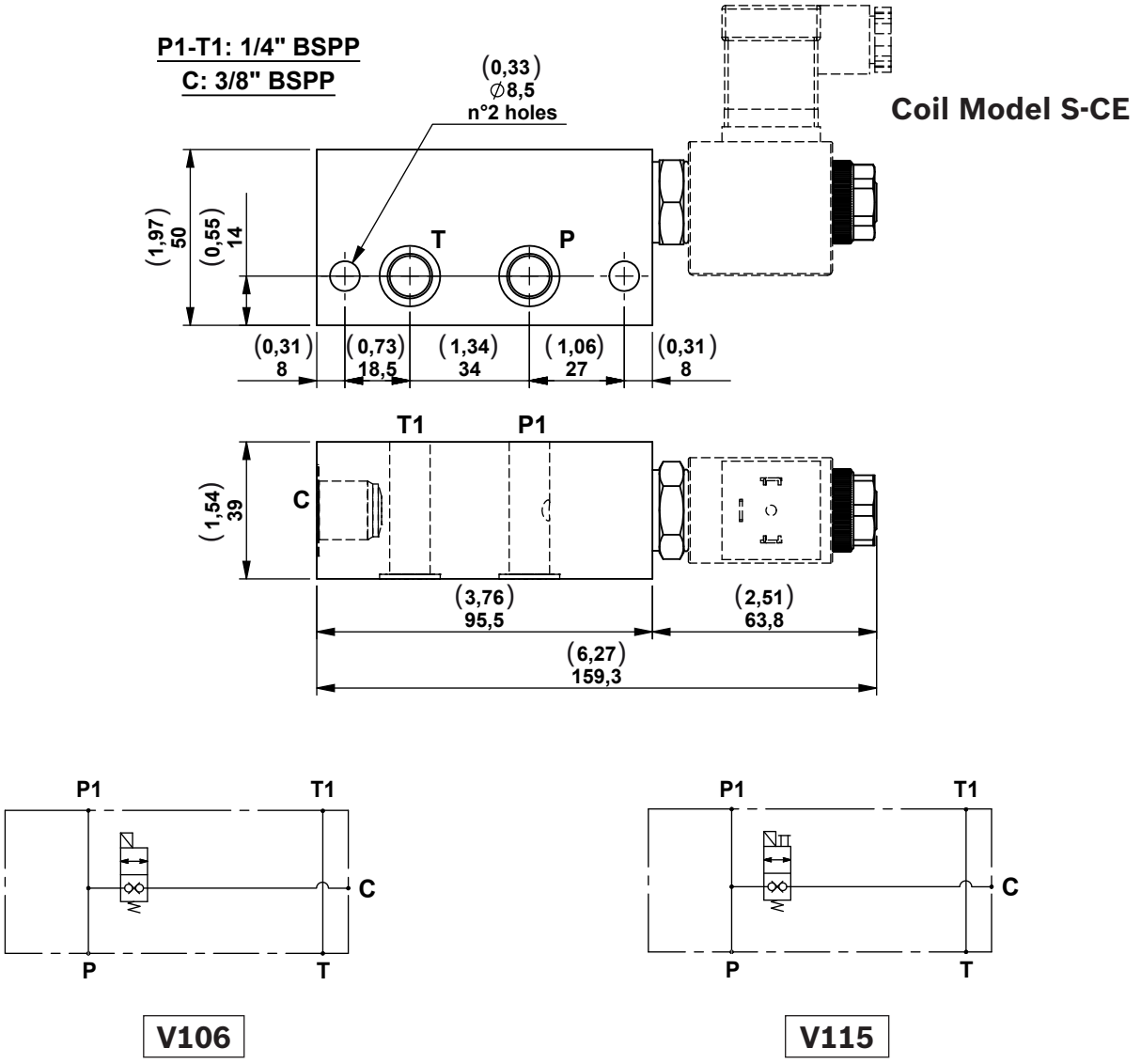

Code	Description	Max working pressure bar (psi)	Max flow l/min (gpm)	Type	Material number
V106	Modular block with CE3-DT solenoid valve	210 (3046)	16 (4,23)	G386606020	R932001613
V115	Modular block with CE3-DT-EM solenoid valve	210 (3046)	16 (4,23)	1586500023	R932004543

Modular block with 2 double locking solenoid valves

Each block includes 2 OR 2056 gaskets.

Coils not included, must be ordered separately.

For the selection of coil model and voltage please refer to page 42.

For the selection of connectors please refer to page 44.

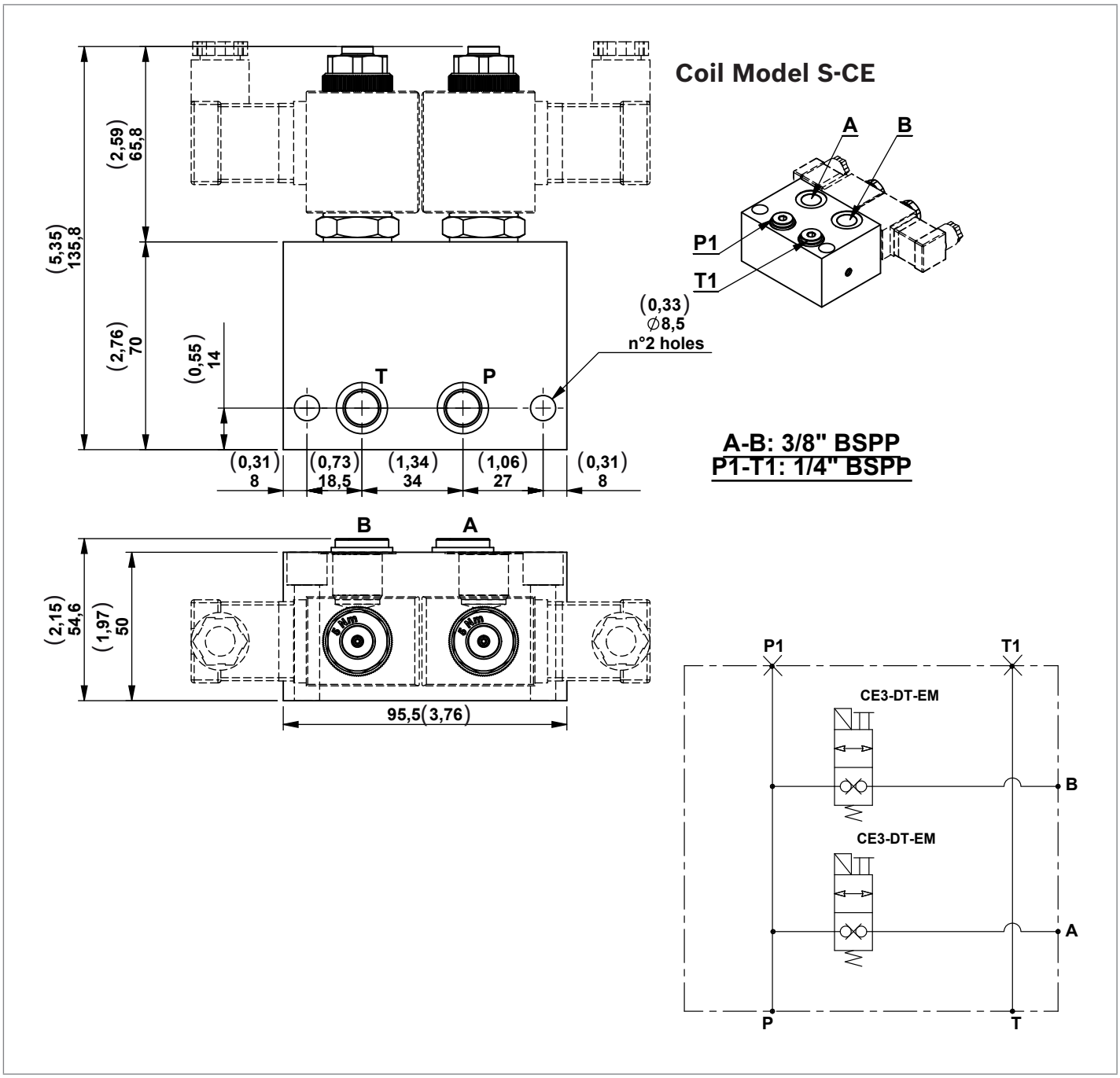

Code	Description	Max working pressure bar (psi)	Max flow l/min (gpm)	Type	Material number
V220	Modular block with 2 CE3-DT-EM with ports 3/8” BSPP	210 (3046)	16 (4,23)	1586500098	R932009614

Modular block with 2 double locking solenoid valves

Each block includes 2 OR 2056 gaskets.

Minimum voltage required: 90% of nominal.

Coils not included, must be ordered separately.

For the selection of coil model and voltage please refer to page 42.

For the selection of connectors please refer to page 44.

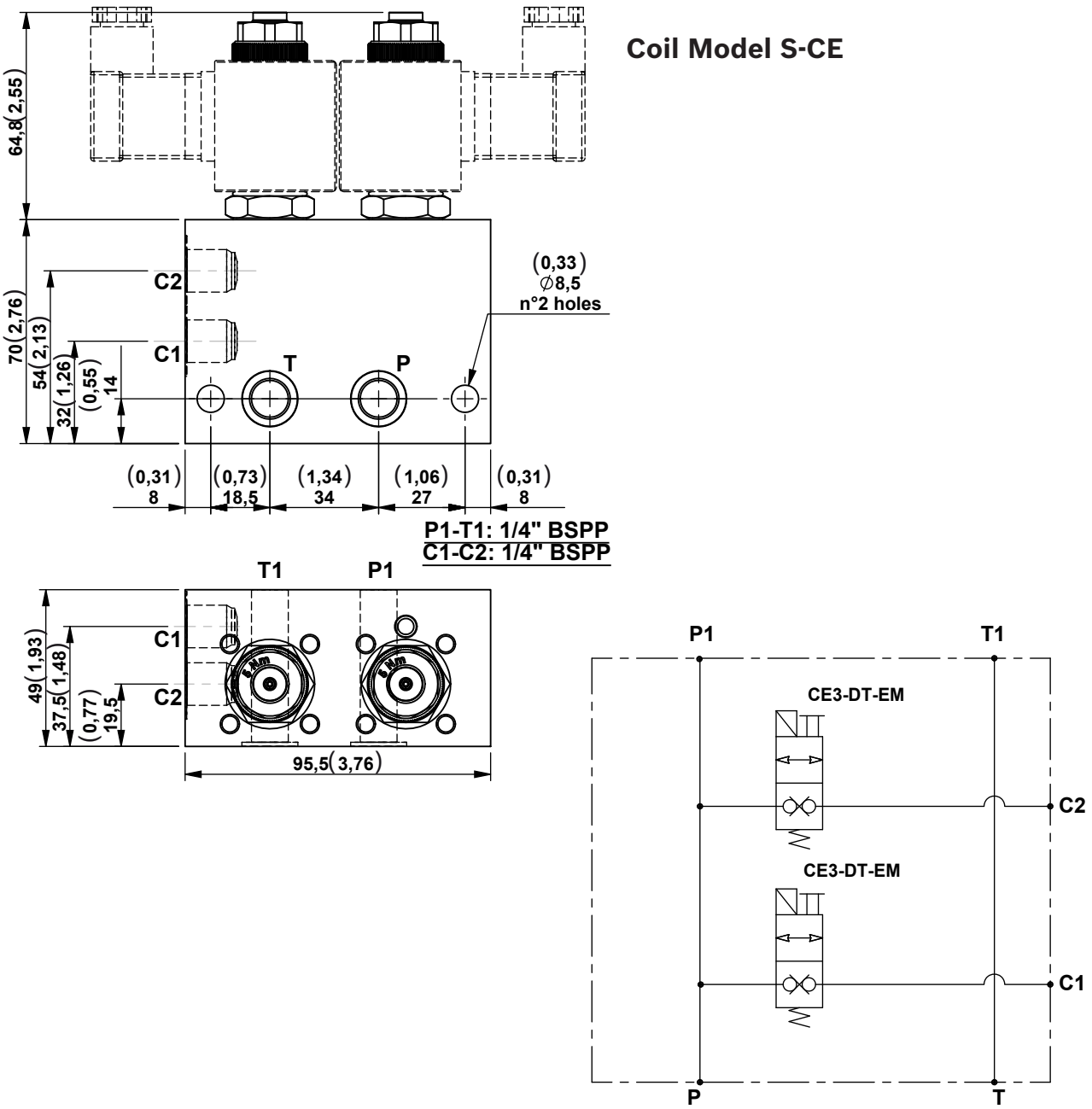

Code	Description	Max working pressure bar (psi)	Max flow l/min (gpm)	Type	Material number
V307	Modular block with 2 CE3-DT-EM with ports 1/4” BSPP	210 (3046)	16 (4,23)	1586500099	R932009709

Accessories

Isolator

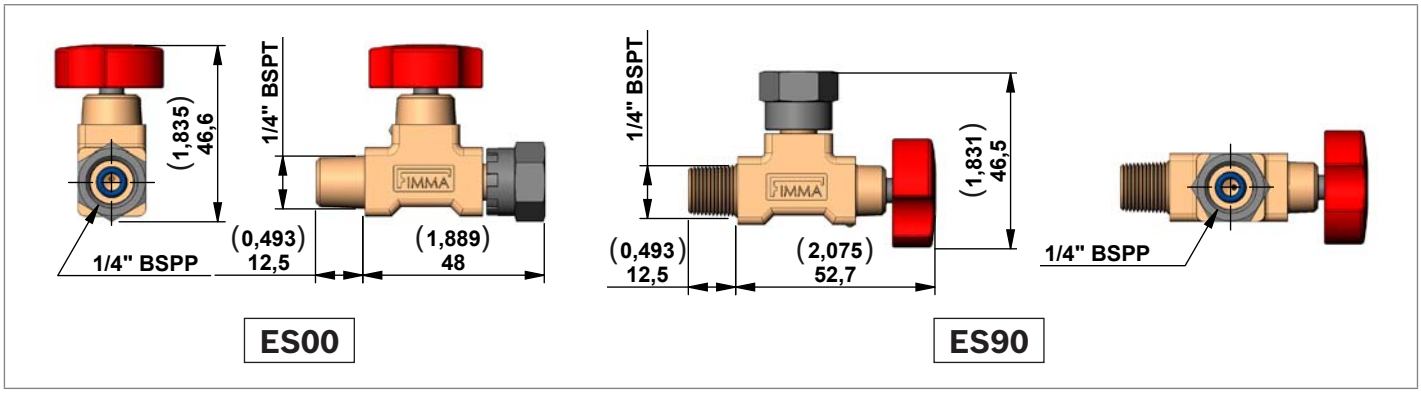

Code	Description	Type	Material Number
ES00	Straight isolator	EM 14	R932500182
ES90	90° isolator	EM 14 T	R932500184

Manometer

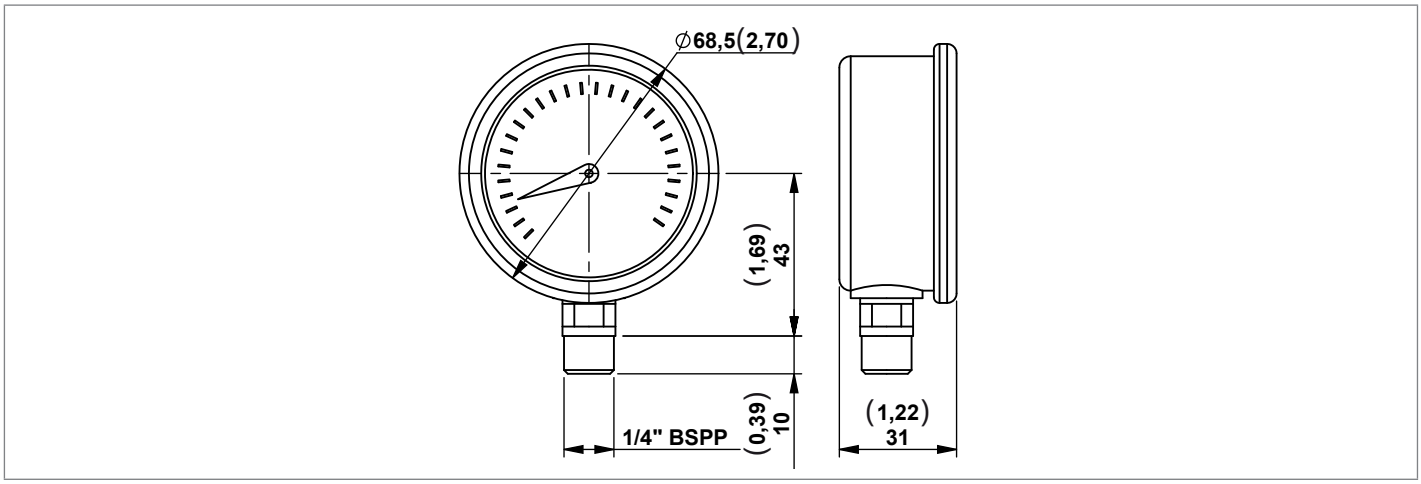

Code	Description	Pressure range bar (psi)	Type	Material Number
MN100	Pressure gauge	0-100 (0-1450)	C163017000	R932000582
MN160	Pressure gauge	0-160 (0-2320)	C163018000	R932000583
MN250	Pressure gauge	0-250 (0-3626)	C163019000	R932000584
MN315	Pressure gauge	0-315 (0-4568)	C163020000	R932000585

Dimensions [mm (inches)]

Pressure Switches

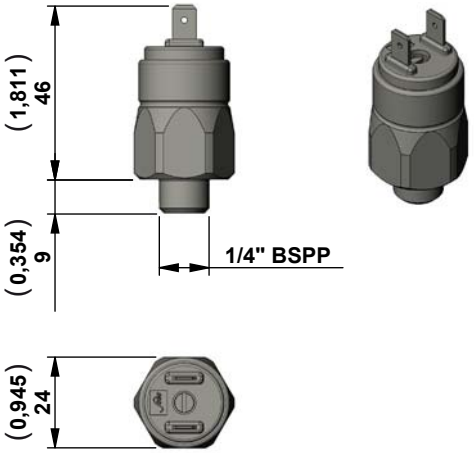

Code	Adjustment Range bar (psi)	Contact Type	Internal Features	Protection (with protective cap assembled)	Type	Material Number
PRNO20	10-20 (145-290)	N.O.	Diaphragm	IP65	C164761000	R932010002
PRNC20	10-20 (145-290)	N.C.	Diaphragm	IP65	C164766000	R932010001
PRNO50	20-50 (290-725)	N.O.	Diaphragm	IP65	C164767000	R932010003
PRNC50	20-50 (290-725)	N.C.	Diaphragm	IP65	C164768000	R932010004
PRNO150	50-150 (725-2175)	N.O.	Piston	IP65	C164769000	R932010005
PRNC150	50-150 (725-2175)	N.C.	Piston	IP65	C164770000	R932010006

Protective Cap for Pressure Switches

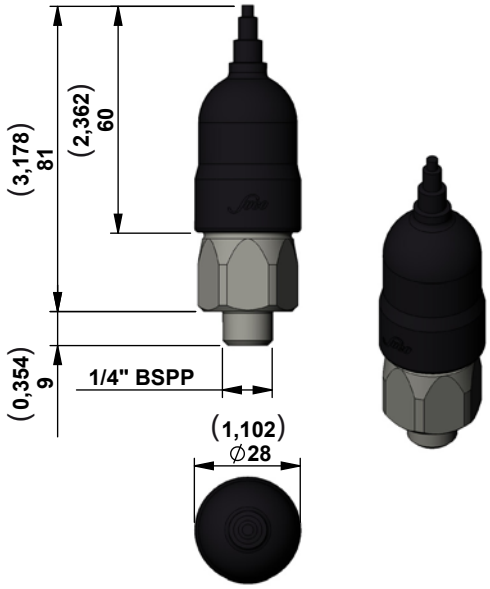

Code	Type	Material Number
CAP	F224013000	R932010000

Horizontal Suction, Pipe

Tank Diameter

Ø 96	Ø 123	Ø 190
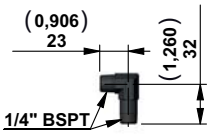	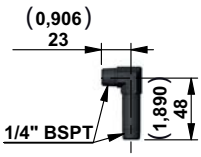	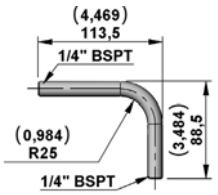

Central Manifold	Oil tank diameter mm (inch)	Type	Material Number
ME	90 (3,54)	K2340S2177	R932011066
	123 (4,84)	K2340S2175	R932011064
	190 (7,48)	M234048000	R932003086

Vertical Suction, Plastic Pipe

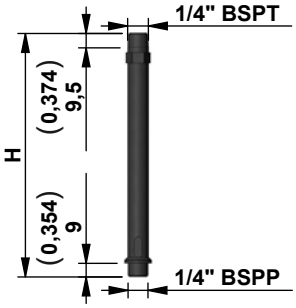

Central Manifold	Oil tank diameter mm (inch)	Type	Material Number
ME	33 (1,30)	K2340S2178	R932011067
	43 (1,70)	K2340S2179	R932011068
	49 (1,93)	K2340S2180	R932011069
	54 (2,13)	K2340S2181	R932011070
	61 (2,40)	K2340S2182	R932011071
	77 (3,03)	K2340S2183	R932011072
	87 (3,42)	K2340S2184	R932011073
	99 (3,90)	K2340S2185	R932011074
	114 (4,49)	K2340S2186	R932011075
	136 (5,35)	K2340S2187	R932011076
	161 (6,34)	K2340S2188	R932011077
	241 (9,49)	K2340S2189	R932011078
	321 (12,64)	K2340S2190	R932011079
	381 (15,00)	K2340S2191	R932011080

Vertical Suction, Steel Pipe

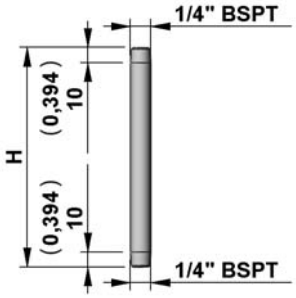

Central Manifold	H mm (inch)	Type	Material Number
ME	42 (1,65)	M234049000	R932003087
	52 (2,05)	K2340S2009	R932002254
	58 (2,28)	K234057000	R932002339
	63 (2,48)	M2340S2163	R932009736
	70 (2,76)	M234051000	R932003089
	86 (3,39)	M234052000	R932003090
	96 (3,78)	M234046000	R932003084
	108 (4,25)	M234050000	R932003088
	123 (4,84)	M234055000	R932003093
	145 (5,71)	M234054000	R932003092
	170 (6,69)	M234053000	R932003091
	250 (9,84)	M234095000	R932003095
	330 (12,99)	M234022000	R932003082

Dimensions [mm (inches)]

Suction Filter

Compatibility	Filtering Degree (µm)	Max Flow l/min (gpm)	Type	Material Number	Drawing
ME	90	8 *(2,11)*	K225583000	R932010867	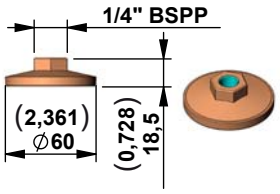

Horizontal Return, Steel Pipe

L mm (inch)	H mm (inch)	Type	Material Number	Drawing
120 (4,72)	45 (1,77)	K234716000	R932002375	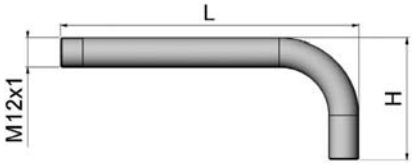
134 (5,28)	90 (3,54)	K234717000	R932002376	
170 (6,69)	90 (3,54)	K234727000	R932002383	

Vertical Return, Plastic Pipe

H mm (inch)	Type	Material Number	Drawing ref.	Drawing
100 (3,94)	K234715000	R932002374	A	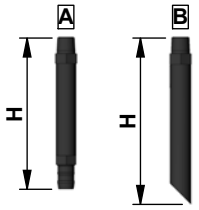
110 (4,33)	K234780000	R932011081	B	
120 (4,72)	K234781000	R932011082	B	
150 (5,91)	K234714000	R932002373	A	
160 (6,30)	K234782000	R932011083	B	
200 (7,87)	K234713000	R932002372	A	
250 (9,84)	K234784000	R932011084	B	
300 (11,81)	K234785000	R932011085	B	
400 (15,75)	K234786000	R932011086	B	

Vertical Return, Steel Pipe

H mm (inch)	Type	Material Number	Drawing
250 (9,84)	K234718000	R932002377	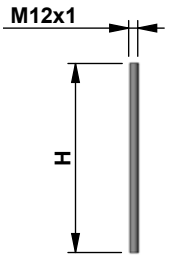
300 (11,81)	K234719000	R932002378	
400 (15,75)	K234722000	R932002379	

Compact power modules
KE, K and KS series

Contents

Ordering Details	2
General Technical Data	6
Compact Power Module Type	9
A.C. Electric Motors	10
D.C. Electric Motors	16
Central Manifold	32
Built-in Valves	61
Gear Pumps	80
Oil Tanks	82
Mounting position	93
Modular Stackable Elements	95
Accessories	127

Ordering Details for Compact Power Modules with A.C. Motor

01	02		03		04		05		06		07		08		09		10		11		12
__	_	-	____	-	____	-	___/__(___)	-	___/___/___/___	-	___/__	-	____	-	_____	-	_/_/_/___	-	___/___/____	-	___/___

Family

01	Power module type	**KE** **K** **KS**

Power module type of motor

02	Without motor	**0**
	With 3ph motor	**2**
	With 1ph motor	**3**

A.C. Electric motor

03	In the Power Module KE-KS type is possible to assemble every code of AC motor shown in the catalogue. In the Power Module K type is not possible to assemble AC Compact Mounting Style motors. (See pag.10-15)	

Junction Elements

04	The code of the Junction Element is showing in the page after the selected AC motor.	

Central Manifold with Pressure range Relief Valve + Request Setting of the Relief Valve in Bar

05	Select the required Central manifold with the required pressure range of the Relief valve and put the required setting in bar beetwen bracket.	

Built-in Valves

06	Insert the codes of the required valves following the number of the cavity in the Central Manifold (see page after the selected Central Manifold).	

Coil Model and Connector

07	In case of selection of Solenoid Built-in Valve choice the required coil Voltage and the required Connector. (See page 72-73)	

Gears pump

08	Is possible to select the required pump between Standard Version and Cast iron cover version. (See page 80)	

Oil Tank

09	Select the required Oil Tank. (See pag.82-92)	

Mounting Position and Mounting Brackets

10	Select the required working position of the Power Module and the position of the therminal box and Oil Filler cap in case of mounting position V1. If needed select the Mounting Bracket. (See pag.93-94)	

Modular Stackable Elements

11	If needed select the additional Modular Stackable Elements.	

Accessories

12	If needed select the additional Accessories.	

Example of Ordering Details for Compact Power Modules ME with A.C. Motor

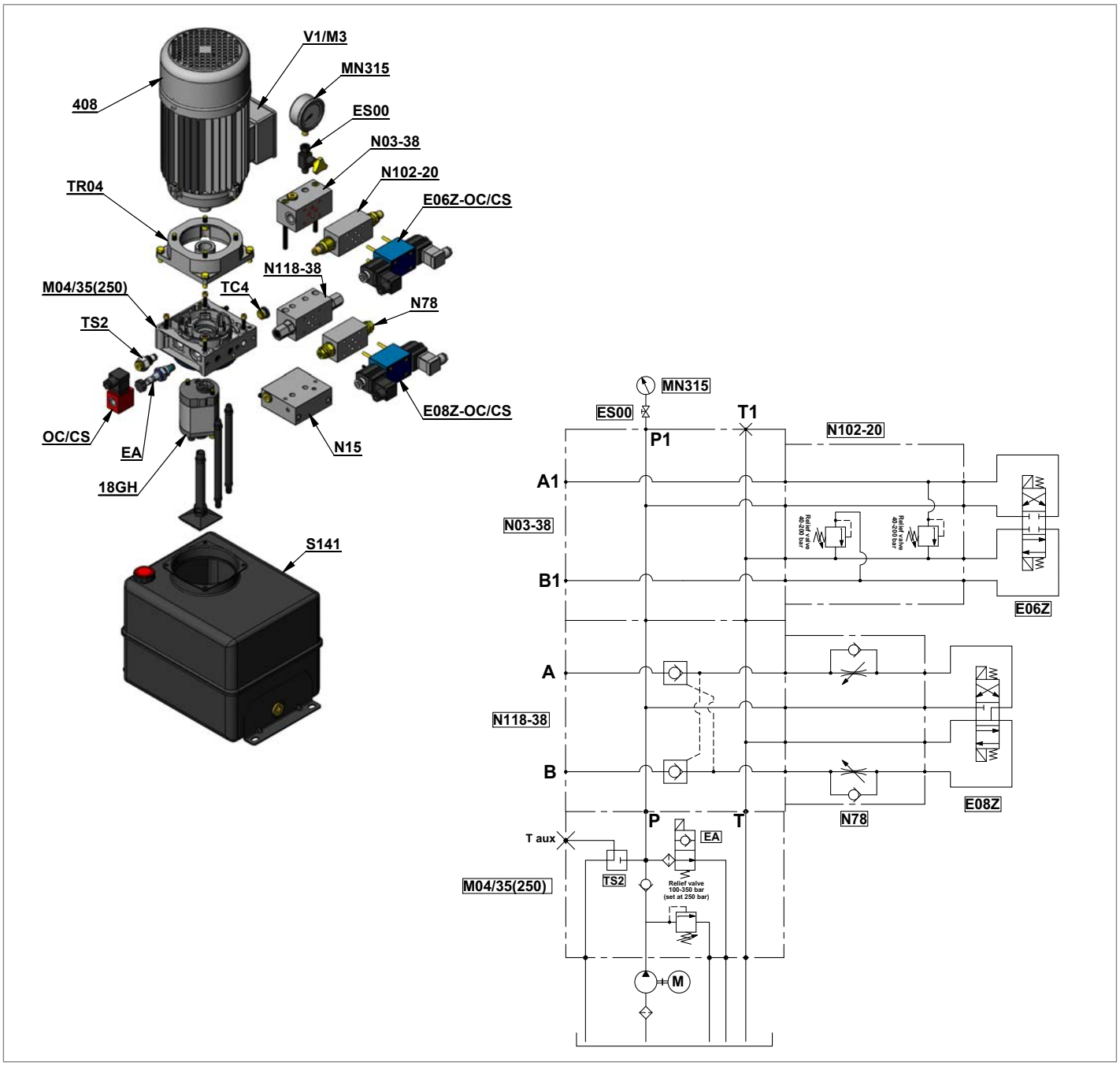

Ordering Details for Compact Power Modules with AC Motor

01	02		03		04		05		06		07		08		09		10		11		12
KE	**2**	-	**408**	-	**TR04**	-	**M04/35 (250)**	-	**EA/TC4/ TS2**	-	**OC/CS**	-	**18GH**	-	**S141**	-	**V1/M3**	-	**N15/N118-38/N78/ E08Z-OC/CS/N03-38/ N102-20/E06Z-OC/CS**	-	**ES00/MN315**
Power Module Type	Power Module Type of Motor		AC Electric motor		Junction Element		Central Manifold with Pressure range Relief Valve + Request Setting of the Relief Valve in Bar beetwen bracket		Built-in Valves in cavity n° 03-05-06		Coil Model and Connector		Gears pump		Oil Tank		Mounting Position and Mounting Brackets		Modular Stackable Elements Coil Voltage Connector		Accessories

Ordering Details for Compact Power Modules ME with D.C. Motor

01	02		03		04		05		06		07		08		09		10		11		12		13		14
__	_	-	____	-	_	-	_	-	____	-	___/__(___)	-	____/____/____/____	-	___/__	-	____	-	_____	-	__/__/__/___	-	____/____/____	-	____/____

Family

01	Power module type	**KE** **K** **KS**

Power module type of motor

02	With DC motor	**1**

D.C. Electric motor

03	In the Power Module KE-KS type is possible to assemble every code of DC motor shown in the catalogue. In the Power Module K type is not possible to assemble DC motors without front flange. (See pag.16-30)	

Relay

04	The available relays are shown in the page after the selected DC motor.	

Plastic Protection

05	The possibility to assemble the plastic protection is shown in the page after the selected DC motor.	

Junction Elements

06	The code of the Junction Element is showing in the page after the selected DC motor.	

Central Manifold with Pressure range Relief Valve + Request Setting of the Relief Valve in Bar

07	Select the required Central manifold with the required pressure range of the Relief valve and put the required setting in bar beetwen bracket.	

Built-in Valves

08	Insert the codes of the required valves following the number of the cavity in the Central Manifold. (see page after the selected Central Manifold)	

Coil Model and Connector

09	In case of selection of Solenoid Built-in Valve choice the required coil Voltage and the required Connector. (See page 72-73)	

Gears pump

10	Is possible to select the required pump between Standard Version and Cast iron cover version. (See page 80)	

Oil Tank

11	Select the required Oil Tank. (See pag.82-92)	

Mounting Position and Mounting Brackets

12	Select the required working position of the Power Module and the position of Relay and Oil Filler cap in case of mounting position V1. If needed select the Mounting Bracket. (See pag.93-94)	

Modular Stackable Elements

13	If needed select the additional Modular Stackable Elements	

Accessories

14	If needed select the additional Accessories	

Example of Ordering Details for Compact Power Modules ME with D.C. Motor

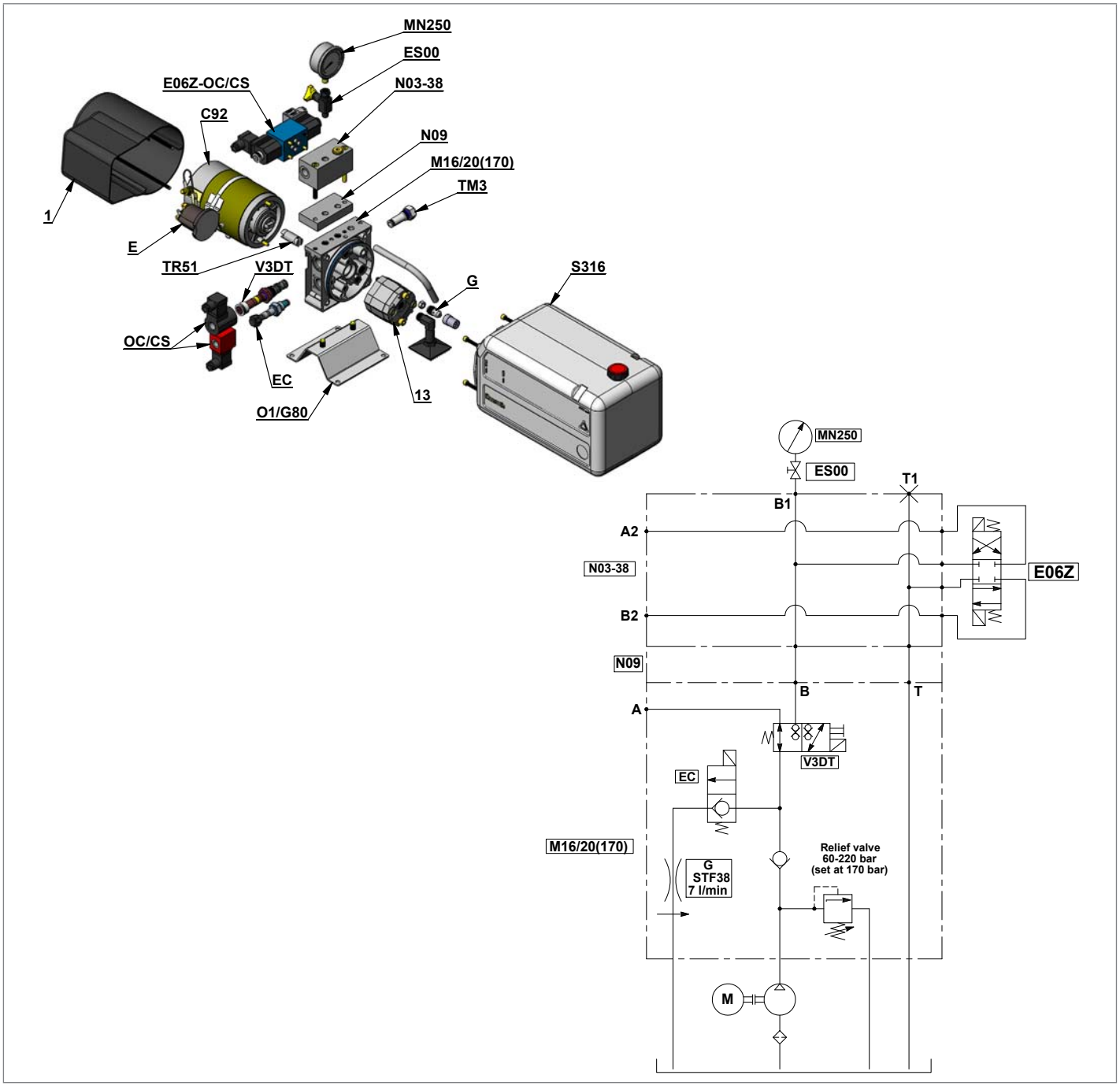

Ordering Details for Compact Power Modules with AC Motor

01	02		03		04		05		06		07		08		09		10		11		12		13		14
KE	**1**	-	**C92**	-	**E**	-	**1**	-	**TR51**	-	**M16/ 20(170)**	-	**V3DT/ TM3/ EC/G**	-	**OC/CS**	-	**13**	-	**S316**	-	**01/ G80**	-	**N09/N03-38/ E06Z-OC/CS**	-	**ES00/ MN250**
Power Module Type	Power Module Type of Motor		DC Electric motor		Relay		Plastic Protection		Junction Element		Central Manifold with Pressure range Relief Valve + Request Setting of the Relief Valve in Bar beetwen bracket		Built-in Valves in cavity n° 03-05-06		Coil Model and Connector		Gears pump		Oil Tank		Mounting Position and Mounting Brackets		Modular Stackable Elements		Accessories

General Technical Data for Compact Power Module KE-K and KS series

Through the years DCOC has developed a highly evolved modular system resulting in powerful, flexible and cost effective power pack range, identified as **“compact power modules”**. In its easier configuration, a “compact power module” is an assembly of electric motor, central manifold with valves, pump, oil tank and a few connection elements. The central manifold, with its built-in valves, allows to achieve a large variety of hydraulic control circuits. If more complex circuits are needed, modular integrated blocks can be added by flange mounting, or interfacing, to the central manifold to extend its capabilities.

Typical applications
Passenger lift
Fork lift
Car and motorcycle lift
Lift table
Dumper
Tail gate
Scissor lift
Gangway and davits for boats
Material handling
Foods machinery

Power module selection
Choose the circuit which meets your application requirements.
Take note of all dimensions resulting from the basic components chosen for your application.

Note
dimensions may vary slightly and should be confirmed by DCOC, if the assembly is to be installed in a space with narrow clearance.

The tank capacity and the tank dimensions need to be large enough to assure proper pump suction: there must always be a reserve of oil in the tank when all cylinders are fully extended and avoid overflow when cylinders are fully retracted.
The tank must be evaluated also for best separation of air from oil, and for settling down oil contamination. It should be placed in a space with, at least, natural ventilation and it should permit enough heat dissipation to prevent high fluid temperature.
Select the electric motor by evaluating the power needed and the motor compliance with the heat developed during the expected run time (or “duty cycle”).

Hydraulic fluid for compact power module
Mineral oil based hydraulic fluids suitable for hydraulic systems can be used; they should have physical lubricating and chemical properties as specified by:
MINERAL OIL BASED HYDRAULIC FLUIDS HL
(DIN 51524 part 1)
MINERAL OIL BASED HYDRAULIC FLUIDS HL P
(DIN 51524 part 2)
For use of environmentally friendly fluids please consult DCOC.

Fluid viscosity, temperature range of the operating fluid, ambient temperature
The fluid viscosity should remain within the range 10 to 300 cSt (centistokes); recommended 15 to 120 cSt.
Permissive cold start viscosity is maximum 2000 cSt.
The fluid temperature should remain within the range -15°C and 80°C (5°F and 176°F).

Note
For compact power module with plastic tank the fluid temperature should remain within the range -15°C and 70°C (5°F and 158°F).
Ambient temperature -15°C +40°C (5°F and 104°F).

Fluid cleanliness requirements and maintenance
We recommend a cleanliness of the operating fluid according to ISO 4406 Class 20/18/15 or cleaner.
All components of the hydraulic circuit , including hoses and actuators, must be flushed and cleaned before assembling, because the compact power module has a suction filter only.
The hydraulic fluid should be replaced after the first 50 hours, and then every 1000 hours, or, at least, once a year.

Power module installation
The mounting position (is basically un-restricted; just avoid installations that could compromise the pump suction, it is recommended to support the power module on vibration dampening blocks when the mounting structure is expected to vibrate.

Wiring and starting-up
The wiring between battery and electric motor should be selected in order to avoid excessive voltage drop (recommended less than 1 V).
It is strictly forbidden to allow the backwards rotation of the pump even at the first starting: to prevent reverse

rotation, the wiring polarities must be correctly connected (except for the reversible pumps).
Caution: when energized, the surface temperature of the electric motor could reach temperature levels of 60-80°C (140-176°F): care should be taken to avoid any accidental contact of people with the motor surface.

A.C. motors
The tolerances on the nominal voltage are:
Single phase motor: 230V +/-5% -
Three phase motor: 230-400V +/-10%.
Protection degree : IP54 (protection against dust and water splash).
Insulation class: F (155°C) (311°F).
All motors are aluminum alloy die cast without painting.

Note
Standard Single phase motors have a permanently connected run capacitor. If the motor starts with pressure in the circuit (load in the actuator) we suggest the use of specials dedicated manifolds KE series with integrated Start-Up valve (Manifold code M09 and M19).

D.C. Motors
DCOC has a wide range of D.C. motors. In the following pages you will find a selection of our standard range.
For further information about our complete range please contact our Sales department.
All the motors shown have clockwise rotation suitable for driving our counter clockwise gear pumps.
For each motor a diagram is shown that enables the customer to select the right pump displacement needed for the required flow and working pressure.
To be sure of selecting the best electric motor for the application, also the duty cycle has to be verified.
Following are the definitions of the type of duty cycles:
S2 = Short time duty cycle: indicate the number of minutes the motor can operate before reaching the maximum allowable temperature. After this time the motor must cool down until the ambient temperature is reached.
S3 = Intermittent duty cycle: indicate the maximum time percentage (%) based on 10 minute period within the motor can run until reaching the maximum allowable temperature. For example an S3 value of 15% = 1,5 minutes running time every 10 minutes period. For 8,5 minutes the motor is switched-off.
The S2 and S3 values are related to the current draw. On the label of motor are indicated the S2 and S3 values referred to the nominal power of the motor.
To check the S2 or S3 value at different conditions is necessary to find the value of current in the motor-pumps diagram and related it with the represented list.
All the diagrams motor-pumps are obtained at the nominal voltage of 12 or 24 Volt using fluid ISO VG 46 at 20-30°C (68-86°F).

Central manifolds
All the Central Manifolds shown in the catalogue are made in die cast aluminium alloy except the manifold code 10 for CPM MR series that is made by extruded bar. The validation of the Central Manifolds follows a life-test with 250 bar (625 psi) pulsed pressure repeated for 300.000 cycles.

Built-in valves
A wide range of cartridge valves and special plugs is available to be assembled in our Central Manifolds. The cartridge valves shown are designed for use in our Compact Power Module and are manufactured using steel with high mechanical strength. Surface treatments protect the exposed parts to the external environment. Standard seals are NBR (BUNA-N) with backup rings in PTFE. The cartridge valves with “leak proof seat design” have an average leakage of 10-15 drops/minute (< 1 cm^3/minute 0.06 in^3/min.) at the maximum pressure using fluid ISO VG46 at 40°C (104°F).
The validation of the cartridge valves follows a life-test at pulsed maximum pressure (indicated for each valve) repeated for 500.000 cycles.
All the solenoid cartridge valves are fitted with protective O-Rings installed between the pole tube and the coil. These O-Rings protect the internal parts from condensation and contaminants , which could cause malfunction.
All the solenoid cartridge valves except the 2/2 VE1 series are designed for operating in D.C..
Power supply in A.C. requires a connector with bridge rectifier included. All the data in the solenoid cartridge valves data sheet are obtained with stabilized coil operating temperature and voltage at -10% of the nominal value.

External gear pumps
DCOC offers a wide range of External Gear Pumps to cover different kinds of applications. The standard versions are suitable for the biggest part of applications. For applications requiring higher peaks of pressure (for example Fork Lift and Presses) a version with cast iron covers is available. For applications requiring high numbers of Start&Stop or low noise feature the tapered shaft version for elastic coupling is preferred (available only for central manifold K series with A.C. motors). All the pumps are pressure compensated to guarantee the best efficiency.

RE 18308, 02/12, 2012, Bosch Rexroth AG

Oil tanks

In this catalogue you will find a wide selection of steel and plastic tanks available as a standard product. If a special tank is required please contact our Sales Department. Steel tanks have Black paint finish and are suitable for operating temperature range -15°C / +80°C (5°F / 176°F). Plastic tanks are obtained in one piece in order to avoid welded parts that are weak points at extreme temperature and vibrations. Plastic tanks are suitable for operating temperature range -15°C / +70°C (5°F / 158°F).

Note
even if the plastic tank mounting system is designed to avoid oil leakage the tank must be securely anchored when fitted in mobile equipment and when subject to shocks and heavy vibrations. Please check that the anchorages do not stress or deform the tank.

Modular stackable elements

Our modular system offers a wide range of standardised elements. They are divided in two main series:
Modular Elements “N” series: Modular blocks for different mounting position with mechanical valve or interface for CETOP valves to create parallel or series circuits.
Modular Elements “V” series: Modular blocks that incorporate solenoid operated cartridge valves 2,3,4 way.
All the Modular Elements are made in extruded aluminum alloy AL 2011 (AlCu5.5Pb0.4Bi0.4 UNI 9002/5). In the catalogue you will find a selection of the main used models.

Note
To reduce the complexity of the system and optimize the available space, special Modular Elements can be designed and manufactured following the customers needs. In this case please contact our Sales Department.

European machine directive 2006/42/CE

According to the Machine Directive2006/42/CE, a complete power module, as described in paragraph 15 and made available to the European market, enters into the definition of “partly completed machinery”.
Instead, the power module sub-assemblies (motor, pump, reservoir, central manifold,...), when not assembled into a complete power pack, are considered “components” which can be employed in a “machinery” or a “partly completed machinery”. In this case, the DCOC components and sub-assemblies must be fitted in compliance with all the relevant technical data sheet applicable to the product, and shall not be operated, adjusted or disassembled before the complete machinery where they are incorporated has been declared to be in compliance with the Machine Directive 2006/42/CE.

Note
All the components shown in the catalogue ARE NOT suitable for use in potentially explosive atmosphere.

Technical information

Below you will find the most common equations used in hydraulics:

	Common Units	Symbols	Equations
Flow	l/min	Q	$Q=\frac{D \times n}{1000} \times 0{,}95$
Operating pressure	bar	P	$P=\frac{F}{0{,}1 \times A}$
Internal diameter hydraulic cylinder	mm	d	–
Area of hydraulic cylinder	mm^2	A	$A=\frac{\Pi \times d^2}{4}$
Piston force	N	F	–
Drive shaft	rev/min	n	–
Power requirement for motor	kW	N	$N=\frac{P \times Q}{612}$
Pump displacement	cm^3/rev	D	–
Torque requirement	Nm	M	$M=\frac{D \times P}{62{,}8 \times 0{,}87}$

Compact Power Module Type

Standard Type KE series

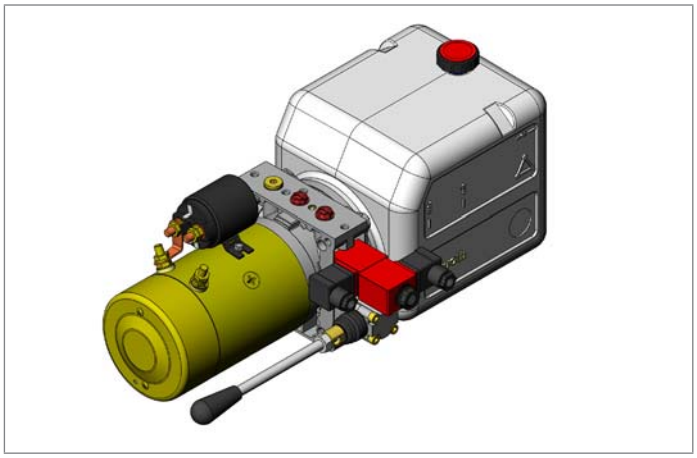

Complex circuits, direct flange AC motors.
DC motors up to 3000 W.
AC motors up to 4000 W (5,5 hp).
Pump displacement up to 7,9 cm3 (0,31 inch3).
Pressure up to 300 bar (4350 psi).
Optionals:
Start-up valve inside.
3-ways solenoid operated valve inside.
4-ways solenoid operated valve inside.
AC electric motor with direct coupling for smaller dimensions.

Optional Type K series

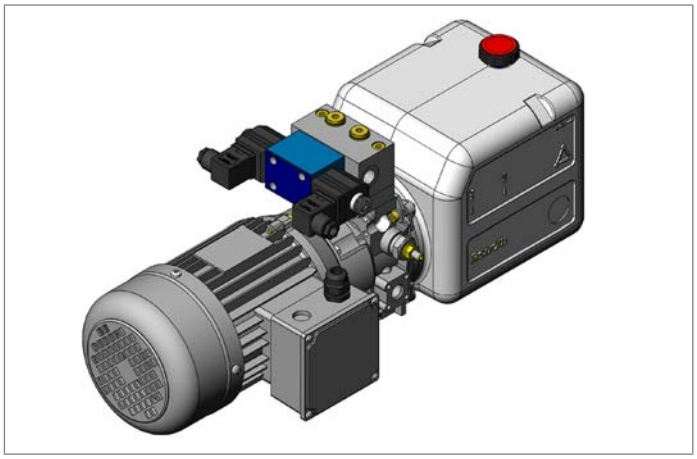

Standardized central manifold for simple hydraulics circuits.
DC motors up to 3000 W.
AC motors up to 4000 W (5,5 hp).
Pump displacement up to 7,9 cm3 (0,31 inch3).
Pressure up to 300 bar (4350 psi).
Optionals:
Elastic coupling.

Optional Type KS series

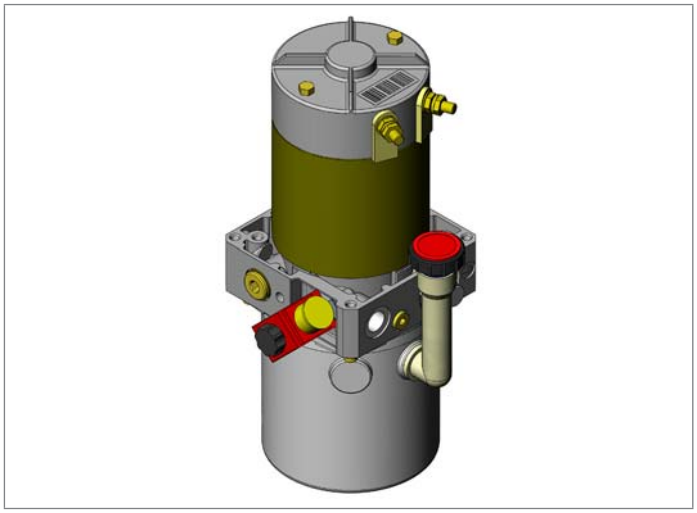

Designed for lifting applications.
Ready solution for simple acting circuits with the possibility of unloading valve.
DC motors up to 3000 W.
AC motors up to 4000 W (5,5 hp).
Pump displacement up to 7,9 cm3 (0,31 inch3).
Pressure up to 300 bar (4350 psi).

Note
that every power module type can be mounted in horizontal or vertical position.

A.C. Electric Motors Standard Flange

Standard A.C. Motors in B14 form.

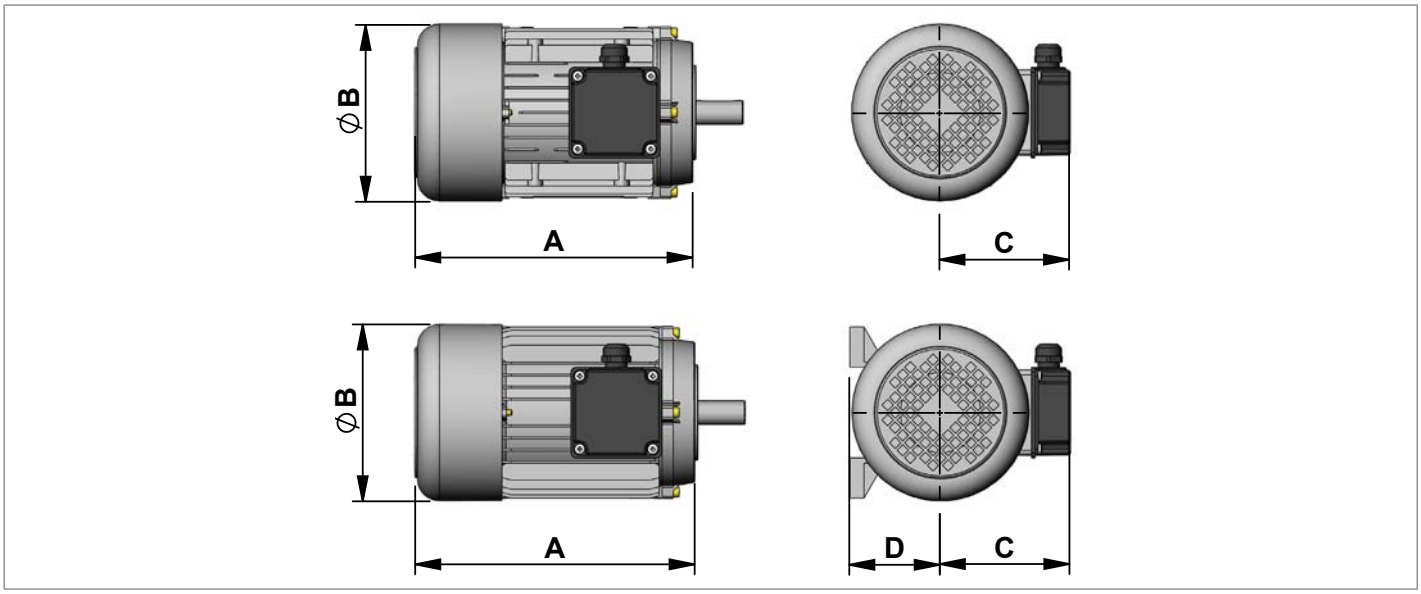

2 Poles Three Phase

Current Motors 230/400V 50Hz 278-/480V 60Hz IP54 (2900 rpm at 50Hz)

Code	Type	Material Number	Power (kW)	Power (hp)	Size IEC	Duty Cycle	A mm (inch)	ØB mm (inch)	C mm (inch)	D mm (inch)	Efficiency Classe
204	C162208000	R932000450	0,75	1	80	S3 60%	237 (9,33)	156 (6,14)	123 (4,84)	80 (3,15)	IE1
205	C162209000	R932000451	1,1	1,5	80	S3 60%	237 (9,33)	156 (6,14)	123 (4,84)	80 (3,15)	IE1
206	C162210000	R932000452	1,5	2	90	S3 60%	255 (10,04)	178 (7,00)	128 (5,04)	90 (3,54)	IE1
207	C162211000	R932000453	2,2	3	90	S3 60%	279 (10,99)	178 (7,00)	128 (5,04)	90 (3,54)	IE1
208	C1622S1268DR	R932008028	3	4	90	S2 60MIN.	314 (12,36)	178 (7,00)	132 (5,20)	90 (3,54)	IE1
210	C1622130DR	R932009055	4	5,5	112	S2 60MIN.	333 (13,11)	219 (8,62)	159 (6,26)	112 (4,41)	IE1

4 Poles Three Phase

Current Motors 230/400V 50Hz IP54 (1450 rpm at 50Hz)

Code	Type	Material Number	Power (kW)	Power (hp)	Size IEC	Duty Cycle	A mm (inch)	ØB mm (inch)	C mm (inch)	D mm (inch)	Efficiency Classe
402	C1622670DR	R932008027	0,25	0,35	71	S1	218 (8,58)	140 (5,51)	109 (4,29)	71 (2,80)	-
403	C1622680DR	R932006105	0,37	0,5	71	S1	212 (8,35)	140 (5,51)	113 (4,45)	71 (2,80)	-
404	C1622150DR	R932006106	0,55	0,75	80	S1	250 (9,84)	156 (6,14)	125 (4,92)	80 (3,15)	-
405	C1622160DR	R932006107	0,75	1	80	S2 60MIN.	250 (9,84)	156 (6,14)	125 (4,92)	80 (3,15)	IE1
406	C1622170DR	R932006108	1,1	1,5	90	S2 60MIN.	260 (10,24)	178 (7,00)	135 (5,32)	90 (3,54)	IE1
407	C1622180DR	R932006109	1,5	2	90	S2 60MIN.	282 (11,10)	178 (7,00)	135 (5,32)	90 (3,54)	IE1
408	C1622S1034DR	R932006110	2,2	3	90	S2 60MIN.	284 (11,18)	178 (7,00)	135 (5,32)	90 (3,54)	IE1
409	C1622200DR	R932006111	3	4	100	S2 60MIN.	305 (12,00)	195 (7,68)	145 (5,71)	100 (3,94)	IE1
410	C1622210DR	R932006112	4	5,5	112	S2 60MIN.	335 (13,19)	219 (8,62)	160 (6,30)	112 (4,41)	IE1

Standard A.C. Motors in B14 form.

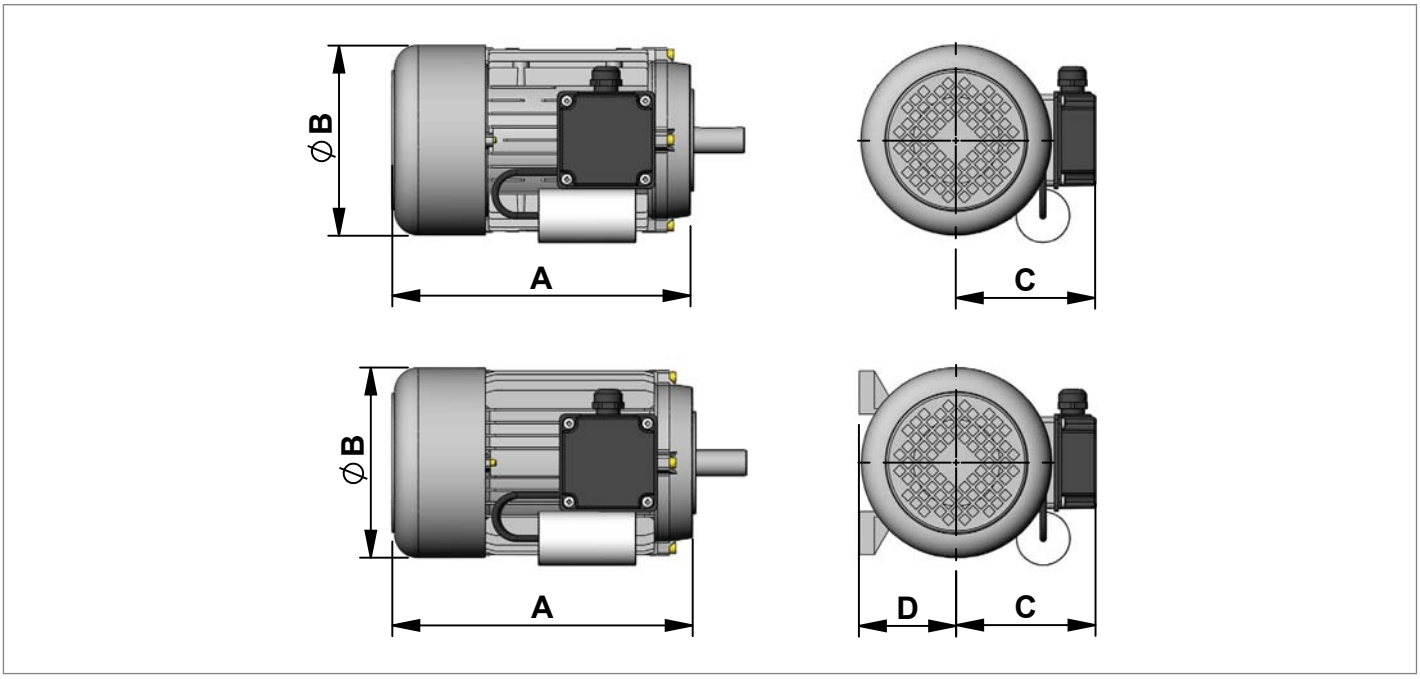

On request motors in B34 form are avaible. In this cases, please put “B34” after the code of the motor when filling in the description. Example “408MB34”.

2 Poles Single Phase

Current Motors 230V 50Hz IP54 (2900 rpm at 50Hz)

Code	Type	Material Number	Power (kW)	Power (hp)	Size IEC	Duty Cycle	A mm (inch)	ØB mm (inch)	C mm (inch)	D mm (inch)
204M	C1622S1264	R932000361	0,75	1	80	S1	237 (9,33)	156 (6,14)	123 (4,84)	80 (3,15)
205M	C1622S1342	R932000400	1,1	1,5	80	S1	237 (9,33)	156 (6,14)	123 (4,84)	80 (3,15)
206M	C1622S1181	R932000333	1,5	2	90	S1	255 (10,04)	178 (7,00)	128 (5,04)	90 (3,54)
207M	C162291000	R932000501	2,2	3	90	S1	279 (10,99)	178 (7,00)	128 (5,04)	90 (3,54)

4 Poles Single Phase

Current Motors 230V 50Hz Form B14 Protection IP54 (1450 rpm at 50Hz)

Code	Type	Material Number	Power (kW)	Power (hp)	Size IEC	Duty Cycle	A mm (inch)	ØB mm (inch)	C mm (inch)	D mm (inch)
402M	C162271000	R932000496	0,25	0,35	71	S1	218 (8,58)	140 (5,51)	109 (4,29)	71 (2,80)
403M	C162272000	R932000497	0,37	0,5	71	S1	212 (8,35)	140 (5,51)	113 (4,45)	71 (2,80)
404M	C162239000	R932000471	0,55	0,75	80	S1	250 (9,84)	156 (6,14)	125 (4,92)	80 (3,15)
405M	C162240000	R932000472	0,75	1	80	S1	250 (9,84)	156 (6,14)	125 (4,92)	80 (3,15)
406M	C162241000	R932000473	1,1	1,5	90	S1	260 (10,24)	178 (7,00)	135 (5,32)	90 (3,54)
407M	C162242000	R932000474	1,5	2	90	S1	282 (11,10)	178 (7,00)	135 (5,32)	90 (3,54)
408M	C162244000	R932000475	2,2	3	100	S1	309 (12,16)	195 (7,68)	145 (5,71)	100 (3,94)

Note

The electric motors with standard flange shown in this pages are delivered by different certified suppliers.
This means the indicated dimensions could change a little, depending on which manufacturer will be assembled.
On the CPM the choice of the manufacturer is based on our stock availability.

Dimensions [mm (inches)]

Junction Elements for A.C. Electric Motor Standard Flange

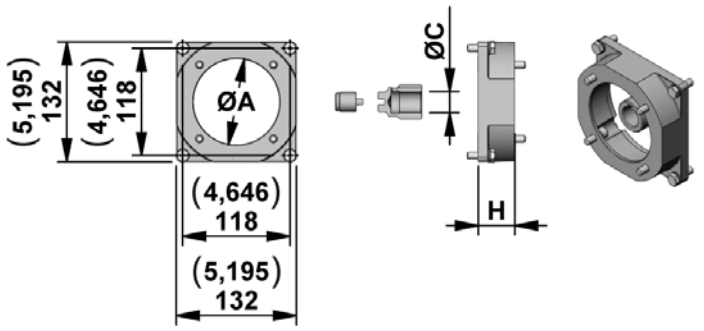

Junction Elements for manifolds KE and KS series (STD COUPLINGS)

Code	Motor Codes	Size IEC	A mm (inch)	C mm (inch)	H mm (inch)	Type	Material Number
TR02	402-402M 403-403M	71	70 (18,50)	14 (0,55)	20,5 (0,81)	K01KE970TR002	R932001894
TR03	204-204M-404-404M 205-205M-405-405M	80	80 (3,15)	19 (0,75)	29 (1,14)	K01KE970TR003	R932001895
TR04	206-206M-406-406M 207-207M-407-407M 208-408	90	95 (3,74)	24 (0,95)	40 (1,57)	K01KE970TR004	R932001896
TR05	409-408M 210-410	100 112	110 (4,33)	28 (1,10)	57 (2,24)	K01KE970TR005	R932001897

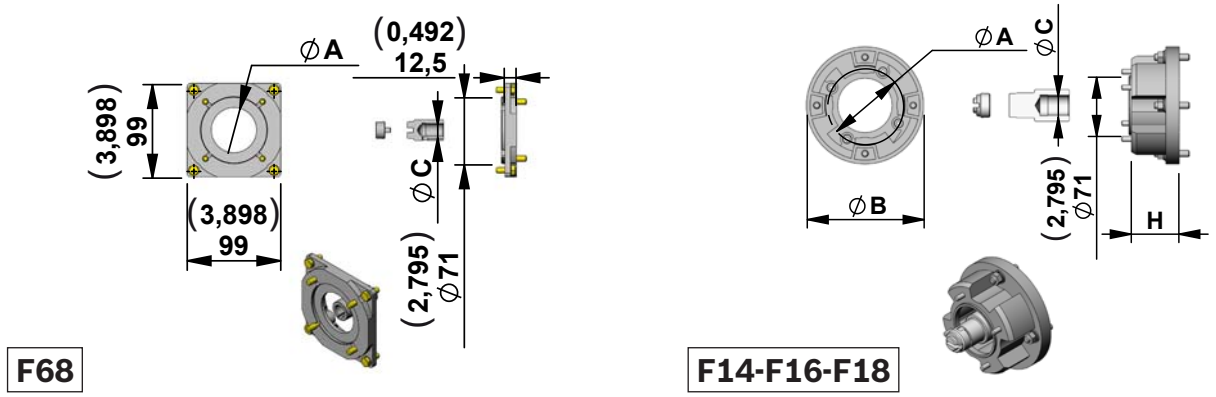

Junction Elements for manifolds K series (STD COUPLINGS)

Code	Motor Codes	Size IEC	A mm (inch)	B mm (inch)	C mm (inch)	H mm (inch)	Type	Material Number
F68	402-402M 403-403M	71	70 (18,50)	-	14 (0,55)	-	K01K3970TR056	R932001917
F14	204-204M-404-404M 205-205M-405-405M	80	80 (3,15)	120 (4,72)	19 (0,75)	45 (1,77)	K01K3970TR022	R932001909
F16	206-206M-406-406M 207-207M-407-407M 208-408	90	95 (3,74)	140 (5,51)	24 (0,95)	57 (2,24)	K01K3970TR021	R932001908
F18	409-408M 210-410	100 112	110 (4,33)	160 (6,30)	28 (1,10)	67 (2,64)	K01K3970TR025	R932001911

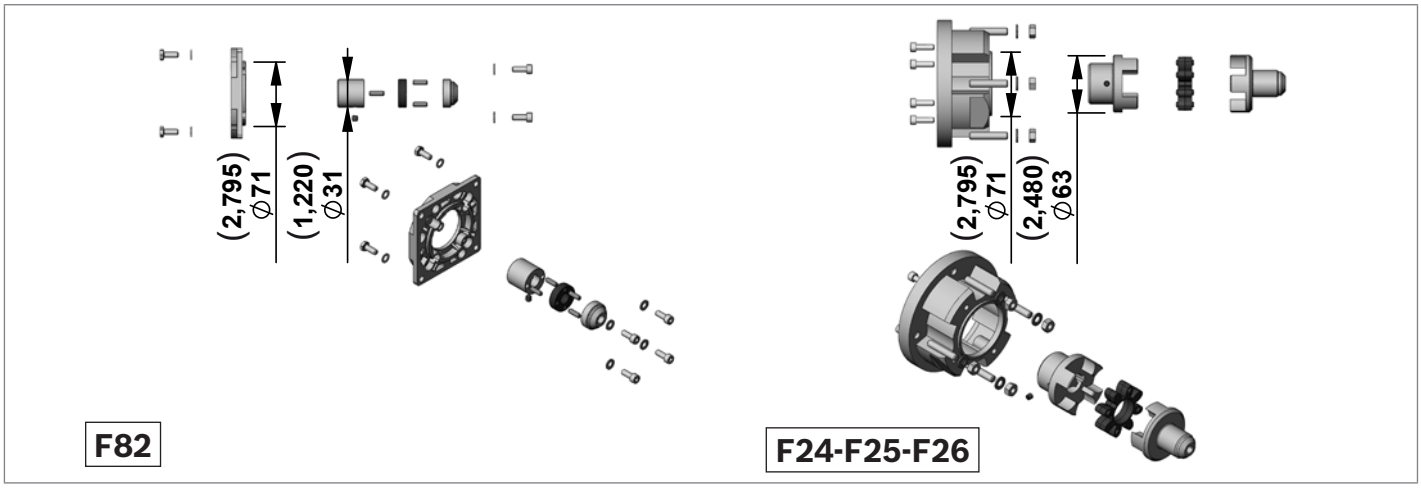

Junction Elements for manifolds K series (ELASTIC COUPLINGS)

Code	Motor Codes	Size IEC	Type	Material Number
F82	402-402M 403-403M	71	K01K3970TR083	R932001926
F24	204-204M-404-404M 205-205M-405-405M	80	K01K3970TR026	R932001912
F25	206-206M-406-406M 207-207M-407-407M 208-408	90	K01K3970TR027	R932001913
F26	409-408M 210-410	100 112	K01K3970TR028	R932001914

Note
The flanges shown in this page have the same dimensions as per the flanges used for standard couplings.
The elastic couplings are suggested for applications requiring low noise and applications with high frequency of START/STOP operations.

A.C. Electric Motor Compact Mounting Style for Power Module Type KE and KS

These motors are designed to reduce the overall dimensions and the cost of the junction elements.

They can be assembled only in the manifold KE and KS series.

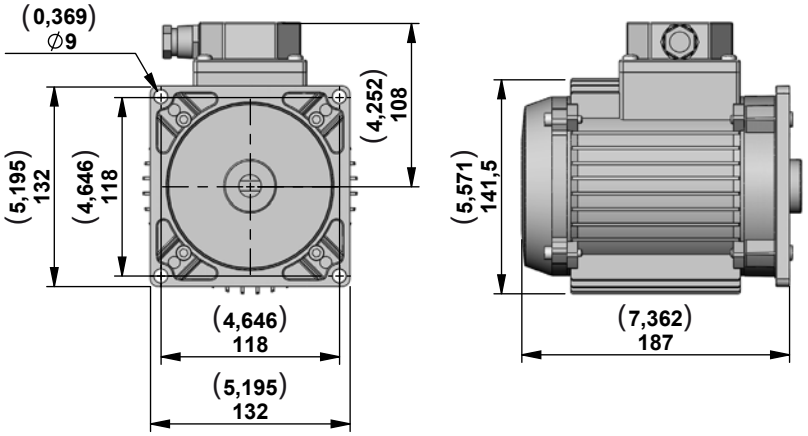

Three Phase Current Motors 230/400V 50Hz IP54 Size IEC 71

Code	Type	Material Number	Power (kW)	Power (hp)	Poles	Rpm at 50Hz	Duty Cycle	Thermal Switch
724	C1622S1085C	R932000302	0,75	1	2	2900	S3 30%	no
724T	C1622S1368C	R932006634	0,75	1	2	2900	S3 30%	yes
725	C1622S1083C	R932000301	1,1	1,5	2	2900	S3 30%	no
725T	C1622S1374	R932000423	1,1	1,5	2	2900	S3 30%	yes

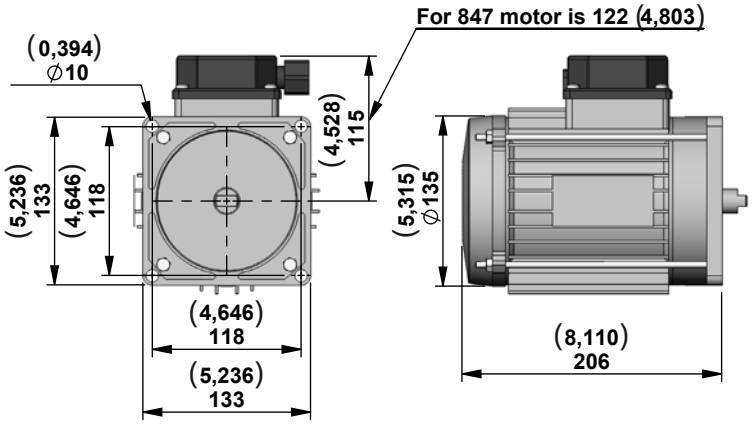

Three Phase Current Motors 230/400V 50Hz IP54 Size IEC 80

Code	Type	Material Number	Power (kW)	Power (hp)	Poles	Rpm at 50Hz	Duty Cycle	Thermal Switch
826T	C1622S1410C	R932011320	1,5	2,0	2	2800	S3 20%	yes
827T	C1622S1409C	R932011321	2,2	3,0	2	2800	S3 15%	yes
828T	C1622S1417C	R932011319	3,6	4,8	2	2800	S3 7%	yes
847	C1622S1288C	R930053403	1,5	2,0	4	1450	S3 20%	no

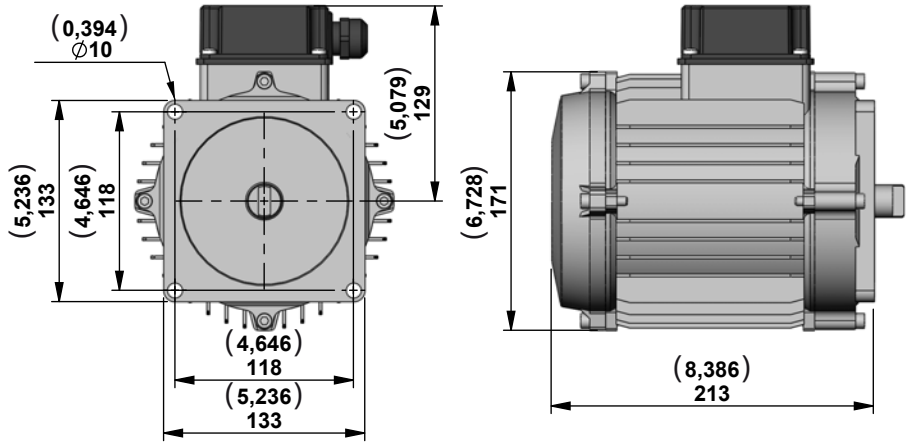

Three Phase Current Motors 230/400V 50Hz IP54 Size IEC 90

Code	Type	Material Number	Power (kW)	Power (hp)	Poles	Rpm at 50Hz	Duty Cycle	Thermal Switch
948T	C1622S1380	R932000429	2,2	3	4	1450	S3 30%	yes
949T	C1622S1166	R932000323	2,6	3,5	4	1450	S3 30%	yes
950T	C1622S1360	R932000412	3	4	4	1450	S3 10%	yes

Note
The motors shown in these tables are a selection of our range.
In case of needs of different technical characteristics PLEASE CONTACT OUR SALES DEPARTEMENT.
The electric motors with standard flange shown in this pages are delivered by different certified suppliers.
This means the indicated dimensions could change a little, depending on which manufacturer will be assembled.
On the CPM the choice of the manufacturer is based on our stock availability.

Junction Elements for A.C. Electric Motor Compact Mounting Style for Power Module Type KE and KS

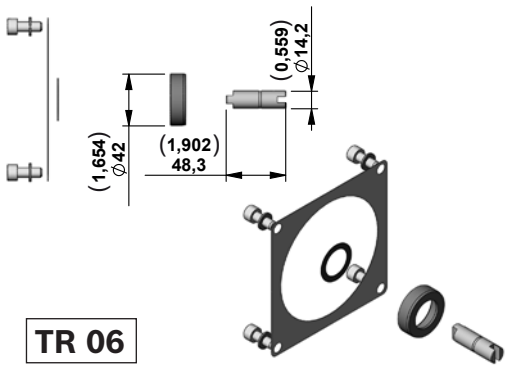

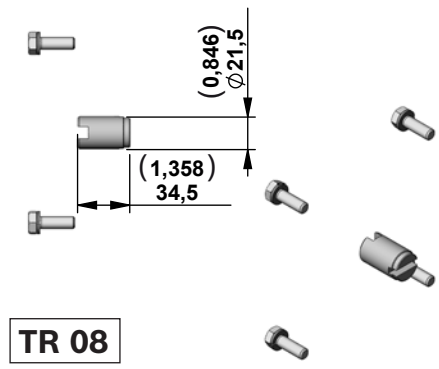

Junction Elements for manifolds KE and KS series

Code	Motor Codes	Size IEC	Type	Material Number
TR06	724-724T-725-725T-745	71	K01KE970TR006	R932001899
TR08	826-826T-827-827T-828-828T-847 948-948T-949-949T-950T	80	K01KE970TR008	R932001900

D.C. Electric Motors Standard Performance

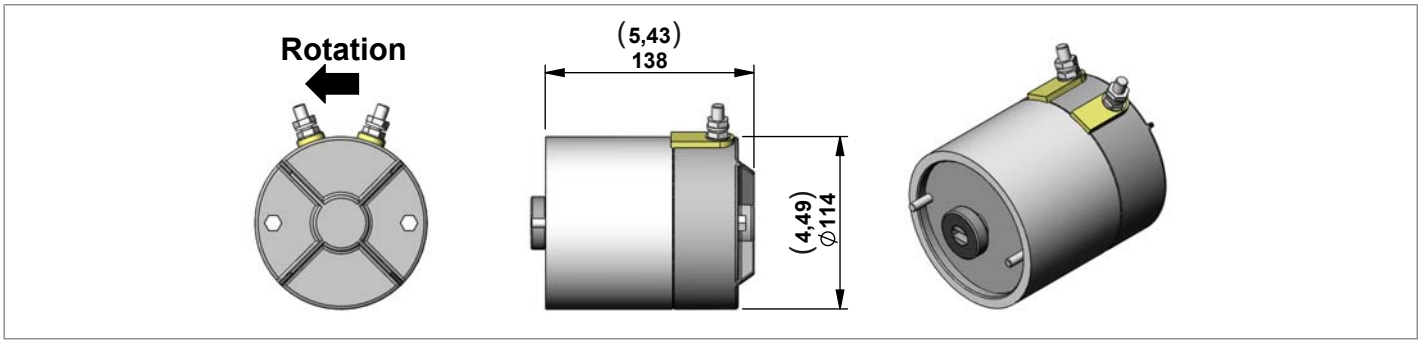

Code	Voltage (V)	Power (W)	Duty Cycle S3% S2 min.	Thermal Switch	UL Certified	Protection index	Type	Material Number
C172	24	1300	15% 6,5 min	NO	YES	IP 54	C1620S1072	R932009389

Electric Motor C172 (24V – 1300W) Diagrams

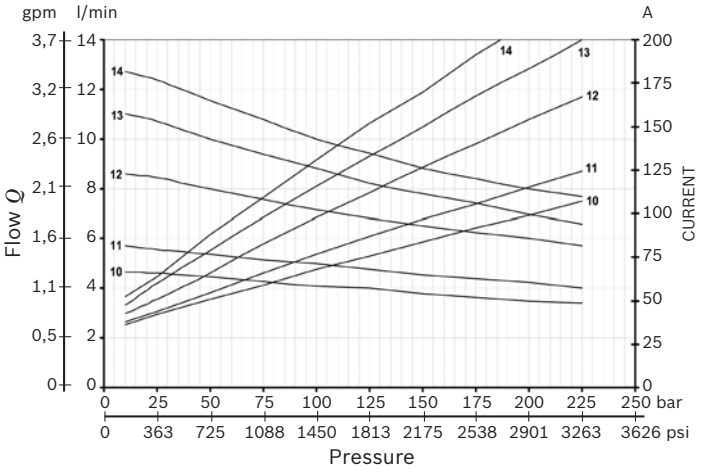

S2 - S3 performance

Amps	S2 (min.)	S3(%) (10 min.)
75	6	17%
100	4	11%
125	2,4	7,5%
150	1,5	5%
175	1	3,5%

Note
The values of the curves may change slightly depending on the brand / model of pump that is mounted.

Relay

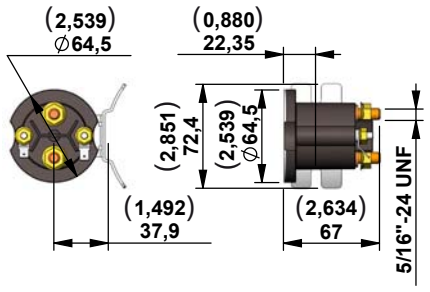

(Pict. 1)

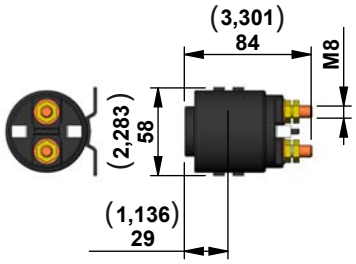

(Pict. 2)

Starting Relay **Standard Performance** (Pict. 1)

Code	Voltage (V)	Nominal Current (A)	Short time Current (A)	Protection INDEX	UL Certified	Type	Material Number
A	Without Relay						
H	24	150	350	IP66	NO	C165535000	R932000693
L	24	150	350	IP66	YES	C165540000	R932008749

Starting Relay **High Performance** (silver plate contact) (Pict. 2)

Code	Voltage (V)	Nominal Current (A)	Short time Current (A)	Protection INDEX	UL Certified	Type	Material Number
A	Without Relay						
E	24	150	350	IP54	NO	C165525000	R932000691

Kit Motor + Relay

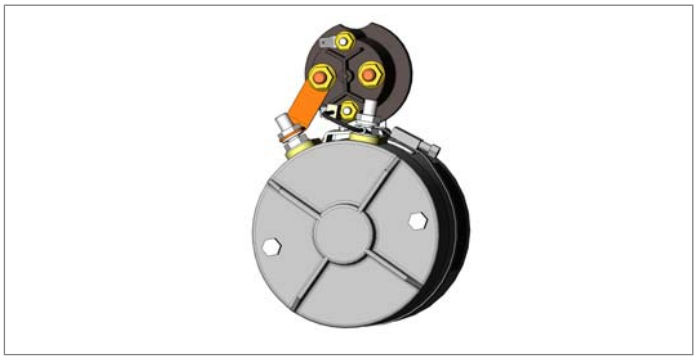

Motor + Relay	Type	Material Number
C172+relay 24V STANDARD performance	K396824172PSF	R930051612
C172+relay 24V STANDARD performance UL certified	K396824172PSFUL	R930051614
C172+relay 24V HIGH performance	K396824172EF	R930051617

Junction Elements for D.C. Electric STD motor flange

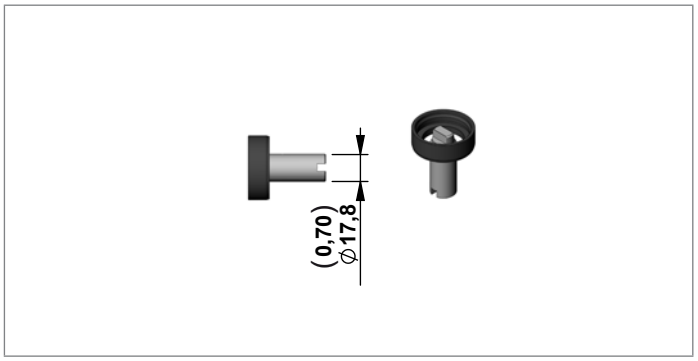

Junction Elements for manifolds **KE** and **KS series**

Code	Type	Material Number
TR65	K01KE970TR065	R932001905

Note
Suitable for KE and KS only.

D.C. Electric Motors Standard Performance

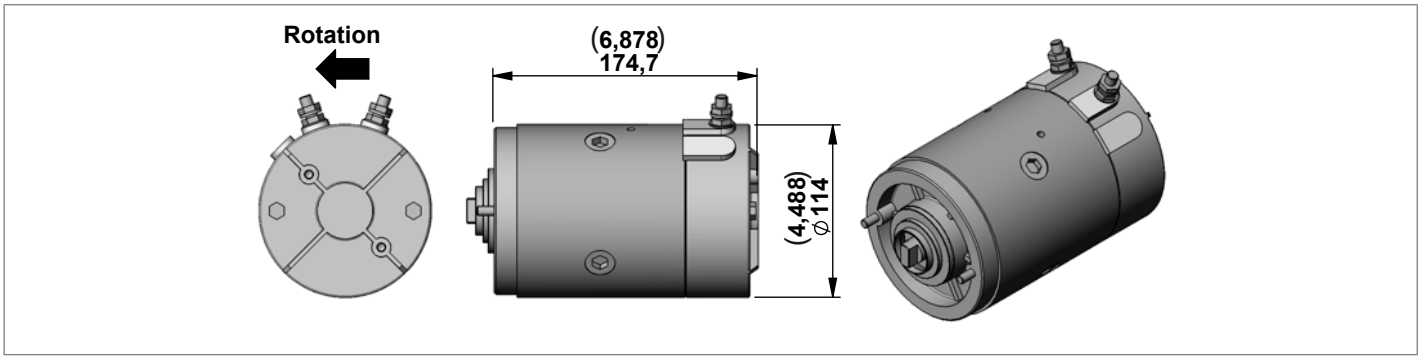

Code	Voltage (V)	Power (W)	Duty Cycle S3% S2 min.	Thermal Switch	UL Certified	Protection index	Type	Material Number
C190	12	1600	5% 2 min	no	yes	IP 54	C1620S1090	R930056392
C191	12	1600	5% 2 min	yes	yes	IP 54	C1620S1091	R930056391
C192	24	2200	5% 2 min	no	yes	IP 54	C1620S1092	R930056390
C193	24	2200	5% 2 min	yes	yes	IP 54	C1620S1093	R930056389

Electric Motor C190-191 (12V – 1600W) Diagrams

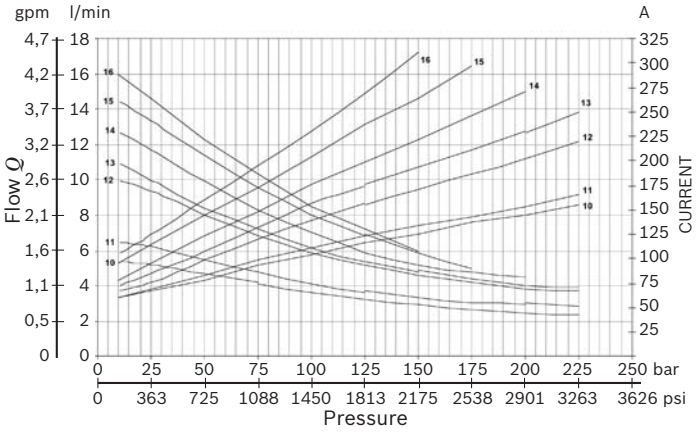

Electric Motor C192 - C193 (24V – 2200W) Diagrams

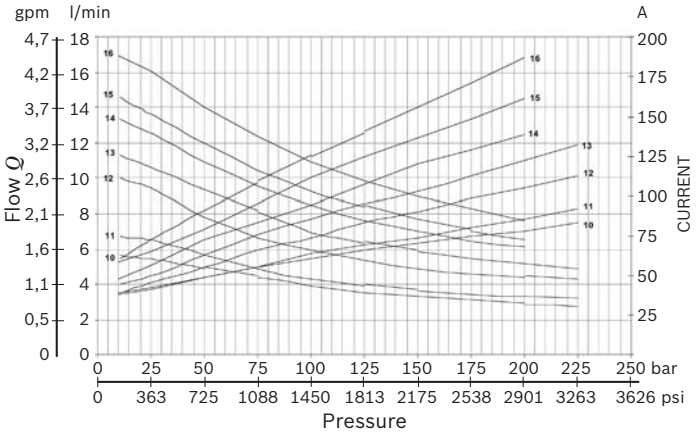

S2 - S3 performance

Amps	S2 (min.)	S3(%) (10 min.)
150	5,5	12%
200	3,5	8%
250	2	6%
300	1,5	4%
350	1	3%

S2 - S3 performance

Amps	S2 (min.)	S3(%) (10 min.)
75	5	12%
100	3	7%
125	1,8	5%
150	1	4%
175	0,7	2,5%

Note
The values of the curves may change slightly depending on the brand / model of pump that is mounted.

Relay

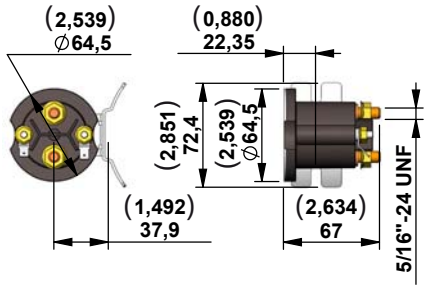

(Pict. 1)

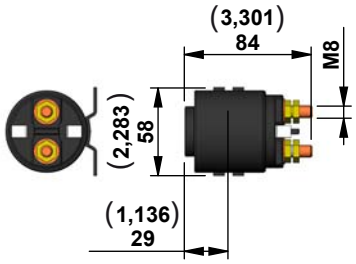

(Pict. 2)

Starting Relay **Standard Performance** (Pict. 1)

Code	Voltage (V)	Nominal Current (A)	Short time Current (A)	Protection INDEX	UL Certified	Type	Material Number
A	Without Relay						
G	24	150	350	IP66	NO	C165534000	R932000692
H	24	150	350	IP66	NO	C165535000	R932000693
L	24	150	350	IP66	YES	C165540000	R932008749

Starting Relay **High Performance** (silver plate contact) (Pict. 2)

Code	Voltage (V)	Nominal Current (A)	Short time Current (A)	Protection INDEX	UL Certified	Type	Material Number
A	Without Relay						
C	24	150	350	IP54	NO	C165524000	R932000690
E	24	150	350	IP54	NO	C165525000	R932000691

Kit Motor + Relay

Motor + Relay	Type	Material Number
C190+relay 12V STANDARD performance	K396812190PSCUF	R930034093
C190+relay 12V HIGH performance	K396812190C	R930034094
C191+relay 12V STANDARD performance	K396812191PSCUF	R930034095
C191+relay 12V HIGH performance	K396812191C	R930034097
C192+relay 24V STANDARD performance	K396824192PSCUF	R930035261
C192+relay 24V STANDARD performance UL certified	K396824192PSUL	R930034098
C192+relay 24V HIGH performance	K396824192E	R930034101
C193+relay 24V STANDARD performance	K396824193PSCUF	R930034102
C193+relay 24V STANDARD performance UL certified	K396824193PSUL	R930035112
C193+relay 24V HIGH performance	K396824193E	R930035252

Plastic Protection

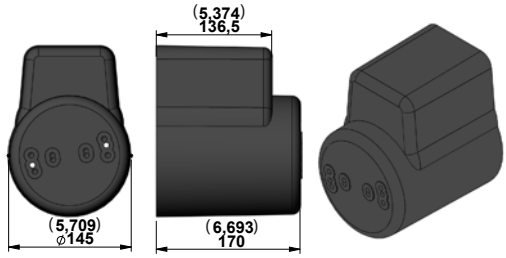

Code		Type	Material Number
0	Without Protection	-	-
1	With Protection	K229701000	R932002246

Kit for assembly plastic protection

Type	Material Number
K01K211565000	R930059147

Junction Elements for D.C. Electric Motor

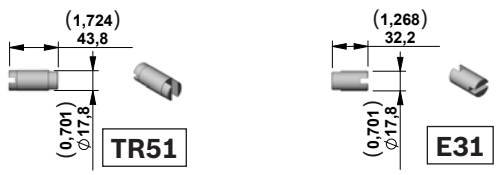

Junction Elements for manifolds

Code	Series	Type	Material Number
TR51	**KE - KS**	K01KE970TR051	R932001901
E31	**K**	K01K3970TR008	R932001907

Dimensions [mm (inches)]

D.C. Electric Motors High Performance

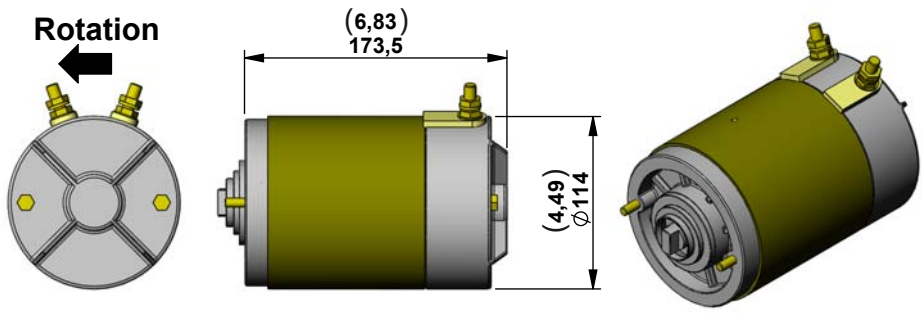

Code	Voltage (V)	Power (W)	Duty Cycle S3% S2 min.	Thermal Switch	UL Certified	Protection index	Type	Material Number
C91	12	1600	7,5% 3 min	NO	NO	IP 54	C162090000	R932000272
C102	12	1600	7,5% 3 min	YES	NO	IP 54	C1620S1002	R932000201
C92	24	2200	4,5% 1,2 min	NO	NO	IP 54	C162091000	R932000273
C103	24	2200	4,5% 1,2 min	YES	NO	IP 54	C1620S1003	R932000202

Electric Motor C91-C102 (12V – 1600W) Diagrams

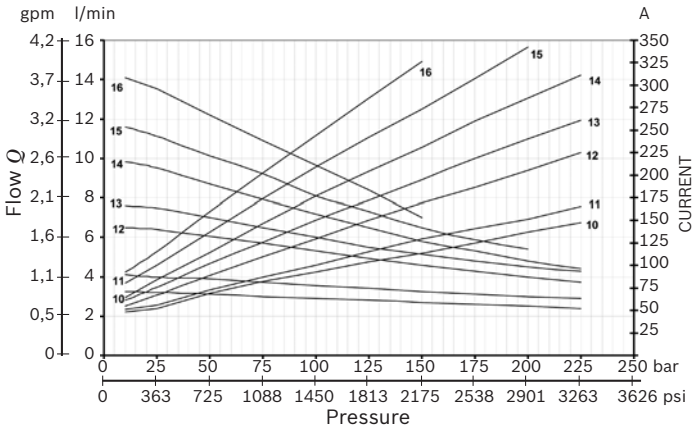

Electric Motor C92-C103 (24V – 2200W) Diagrams

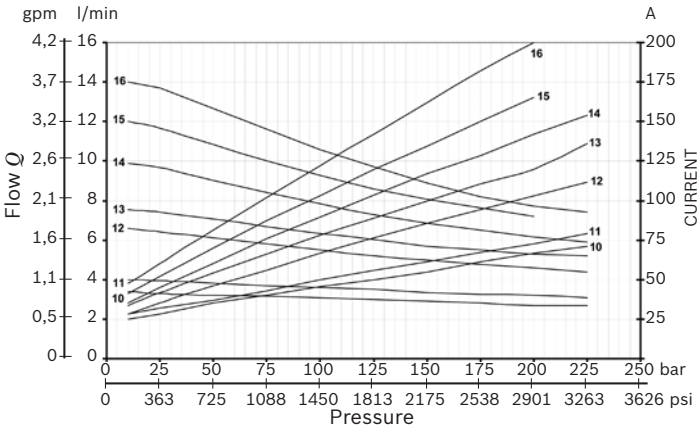

S2 - S3 performance

Amps	S2 (min.)	S3(%) (10 min.)
150	5,5	12%
200	3,5	8%
250	2	6%
300	1,5	4%
350	1	3%

S2 - S3 performance

Amps	S2 (min.)	S3(%) (10 min.)
75	5	12%
100	3	7%
125	1,8	5%
150	1	4%
175	0,7	2,5%

Note
The values of the curves may change slightly depending on the brand / model of pump that is mounted.

Relay

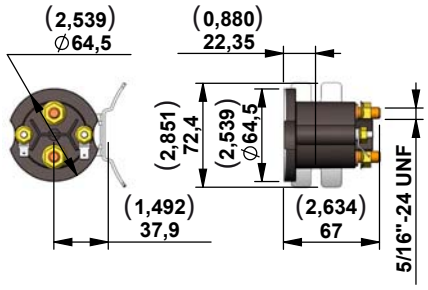

(Pict. 1)

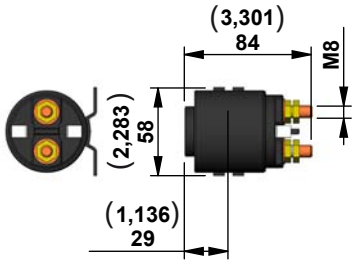

(Pict. 2)

Starting Relay **Standard Performance** (Pict. 1)

Code	Voltage (V)	Nominal Current (A)	Short time Current (A)	Protection INDEX	UL Certified	Type	Material Number
A	Without Relay						
G	24	150	350	IP66	NO	C165534000	R932000692
H	24	150	350	IP66	NO	C165535000	R932000693

Starting Relay **High Performance** (silver plate contact) (Pict. 2)

Code	Voltage (V)	Nominal Current (A)	Short time Current (A)	Protection INDEX	UL Certified	Type	Material Number
A	Without Relay						
C	24	150	350	IP54	NO	C165524000	R932000690
E	24	150	350	IP54	NO	C165525000	R932000691

Kit Motor + Relay

Motor + Relay	Type	Material Number
C91+relay 12V STANDARD performance	K39681291PSCUF	R932007960
C91+relay 12V HIGH performance	K39681291CF	R932002749
C102+relay 12V STANDARD performance	K396812102PSCUF	R932007969
C102+relay 12V HIGH performance	K396812102CF	R932002715
C92+relay 24V STANDARD performance	K39682492PSCUF	R932007961
C92+relay 24V HIGH performance	K39682492EF	R932002818
C103+relay 24V STANDARD performance	K396824103PSCUF	R932007968
C103+relay 24V HIGH performance	K396824103EF	R932002771

Plastic Protection

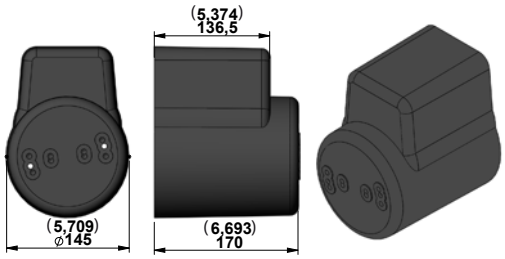

Code		Type	Material Number
0	Without Protection	-	-
1	With Protection	K229701000	R932002246

Kit for assembly plastic protection

Type	Material Number
K01K211518000	R932009439

Junction Elements for D.C. Electric Motor

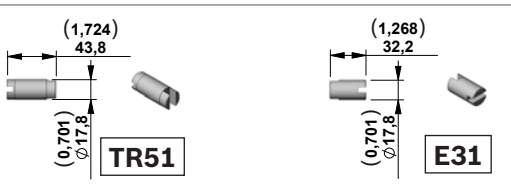

Junction Elements for manifolds

Code	Series	Type	Material Number
TR51	**KE - KS**	K01KE970TR051	R932001901
E31	**K**	K01K3970TR008	R932001907

Dimensions [mm (inches)]

D.C. Electric Motors High Performance

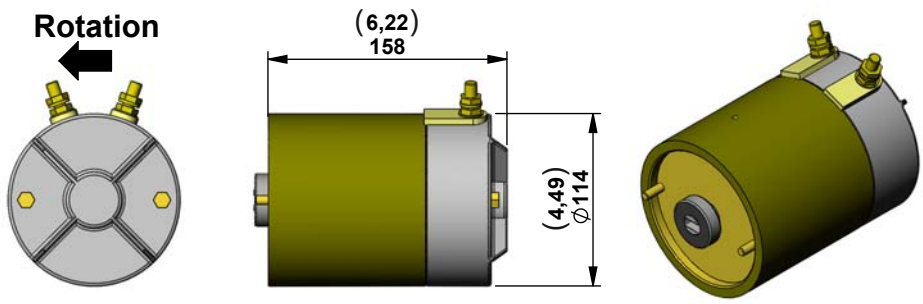

Code	Voltage (V)	Power (W)	Duty Cycle S3% S2 min.	Thermal Switch	UL Certified	Protection index	Type	Material Number
C154	24	2200	4,5% 1,2 min	NO	YES	IP 54	C1620S1A54	R932011151
C164	24	2200	4,5% 1,2 min	YES	NO	IP 54	C1620S1064	R932008439

Electric Motor C154-C164 (24V – 2200W) Diagrams

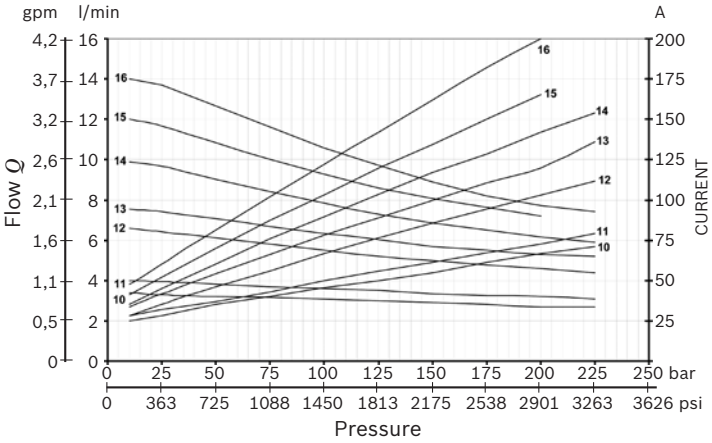

S2 - S3 performance

Amps	S2 (min.)	S3(%) (10 min.)
75	5	12%
100	3	7%
125	1,8	5%
150	1	4%
175	0,7	2,5%

Note
The values of the curves may change slightly depending on the brand / model of pump that is mounted.

Relay

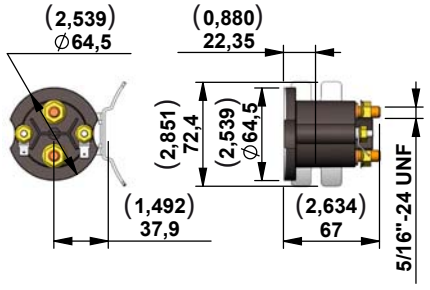

(Pict. 1)

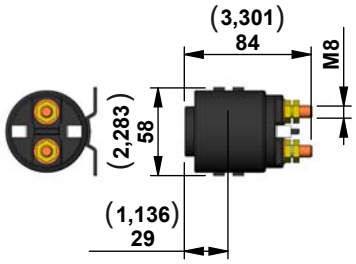

(Pict. 2)

Starting Relay **Standard Performance** (Pict. 1)

Code	Voltage (V)	Nominal Current (A)	Short time Current (A)	Protection INDEX	UL Certified	Type	Material Number
A	Without Relay						
H	24	150	350	IP66	NO	C165535000	R932000693
L	24	150	350	IP66	YES	C165540000	R932008749

Starting Relay **High Performance** (silver plate contact) (Pict. 2)

Code	Voltage (V)	Nominal Current (A)	Short time Current (A)	Protection INDEX	UL Certified	Type	Material Number
A	Without Relay						
E	24	150	350	IP54	NO	C165525000	R932000691

Kit Motor + Relay

Motor + Relay	Type	Material Number
C154+relay 24V STANDARD performance	K396824154PSF	R930051625
C154+relay 24V STANDARD performance UL certified	K396824154PSFUL	R930051626
C154+relay 24V HIGH performance	K396824154EF	R930051627
C164+relay 24V STANDARD performance	K396824164PSF	R930051628
C164+relay 24V HIGH performance	K396824164EF	R930051986

Junction Elements for D.C. Electric STD motor flange

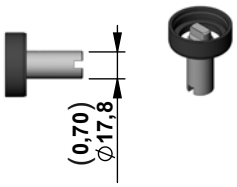

Junction Elements for manifolds **KE** and **KS series**

Code	Type	Material Number
TR65	K01KE970TR065	R932001905

Note
Suitable for KE and KS only.

Dimensions [mm (inches)]

D.C. Electric Motors High Performance Fan Cooled

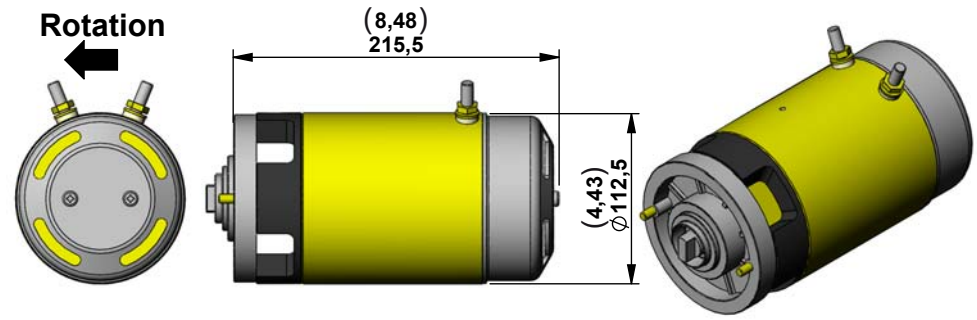

Code	Voltage (V)	Power (W)	Duty Cycle S3% S2 min.	Thermal Switch	UL Certified	Protection index	Type	Material Number
C78	12	1500	14% 4 min	NO	NO	IP 23	C162077000	R932000266
C79	24	2000	10% 4,5 min	NO	NO	IP 23	C162078000	R932000267

Electric Motor C78 (12V – 1500W) Diagrams

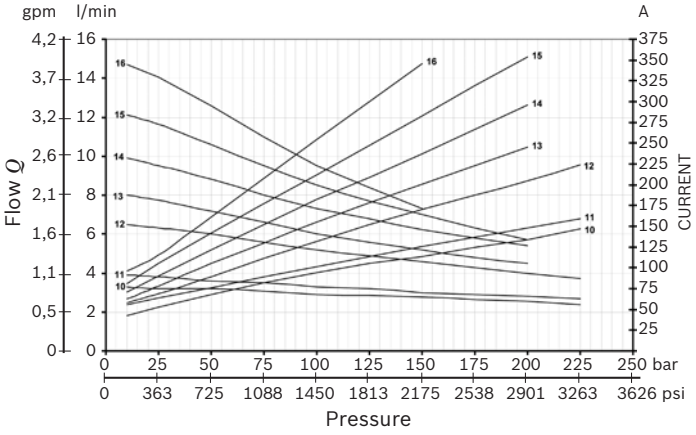

Electric Motor C79 (24V – 2000W) Diagrams

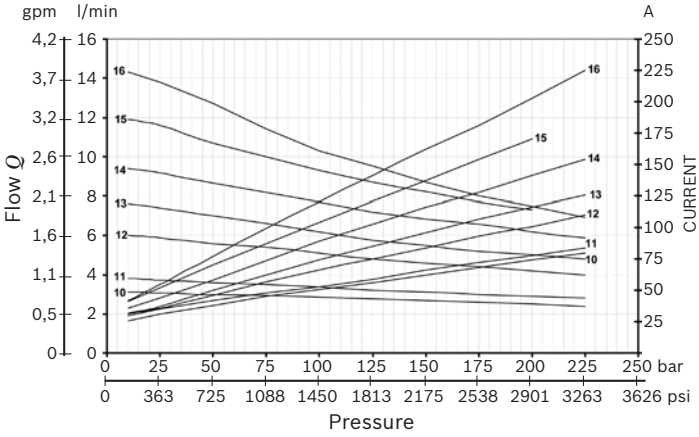

S2 - S3 performance

Amps	S2 (min.)	S3(%) (10 min.)
150	10	30%
200	4	15%
250	2	7%
300	1	4%

S2 - S3 performance

Amps	S2 (min.)	S3(%) (10 min.)
75	14	40%
100	5	15%
125	3,5	10%
150	2	6%
175	1	5%

Note
The values of the curves may change slightly depending on the brand / model of pump that is mounted.

Relay

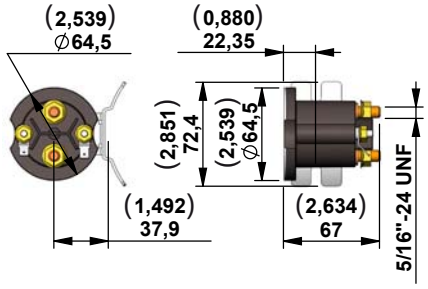

(Pict. 1)

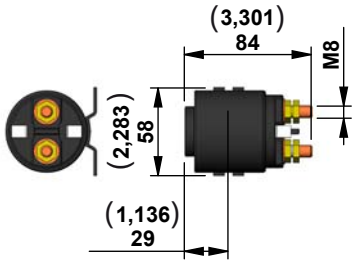

(Pict. 2)

Starting Relay **Standard Performance** (Pict. 1)

Code	Voltage (V)	Nominal Current (A)	Short time Current (A)	Protection INDEX	UL Certified	Type	Material Number
A	Without Relay						
G	12	150	350	IP66	NO	C165534000	R932000692
H	24	150	350	IP66	NO	C165535000	R932000693

Starting Relay **High Performance** (silver plate contact) (Pict. 2)

Code	Voltage (V)	Nominal Current (A)	Short time Current (A)	Protection INDEX	UL Certified	Type	Material Number
A	Without Relay						
C	12	150	350	IP54	NO	C165524000	R932000690
E	24	150	350	IP54	NO	C165525000	R932000691

Kit Motor + Relay

Motor + Relay	Type	Material Number
C78+relay 12V STANDARD performance	K39681278PSF	R930051640
C78+relay 12V HIGH performance	K39681278CF	R932002743
C79+relay 24V STANDARD performance	K39682479PSF	R932002811
C79+relay 24V HIGH performance	K39682479EF	R932002810

Junction Elements for D.C. Electric Motor

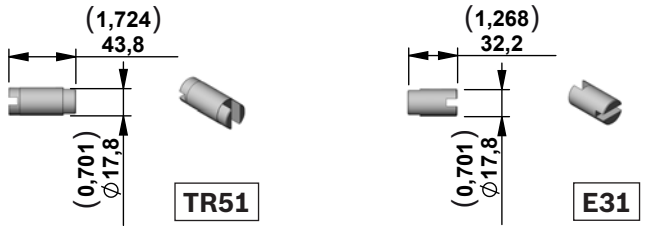

Junction Elements for manifolds

Code	Series	Type	Material Number
TR51	**KE - KS**	K01KE970TR051	R932001901
E31	**K**	K01K3970TR008	R932001907

D.C. Electric Motors High Performance

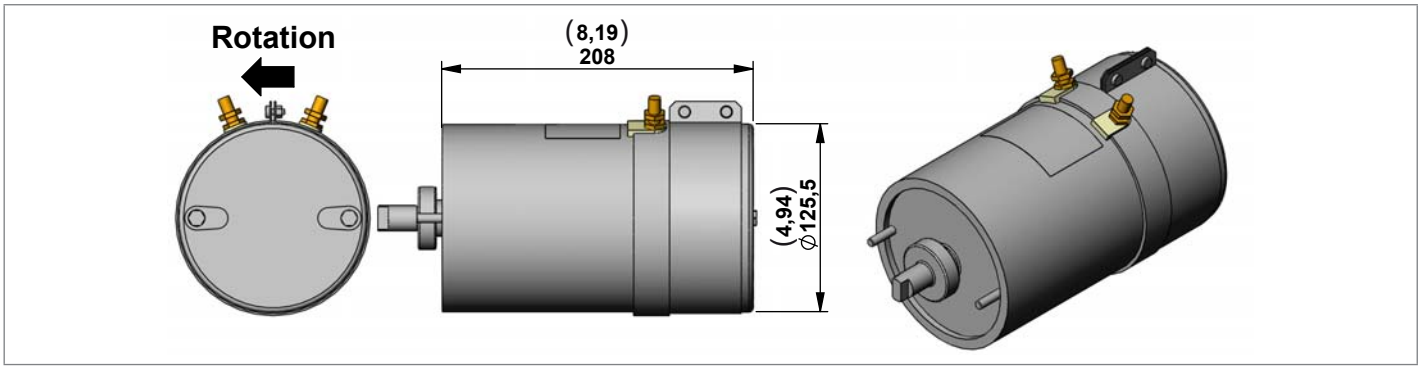

Code	Voltage (V)	Power (W)	Duty Cycle S3% S2 min.	Thermal Switch	UL Certified	Protection index	Type	Material Number
C163	24	3000	9% 5 min.	NO	YES	IP 43	C1620S1063	R932009387

Electric Motor C163 (24V – 3000W) Diagrams

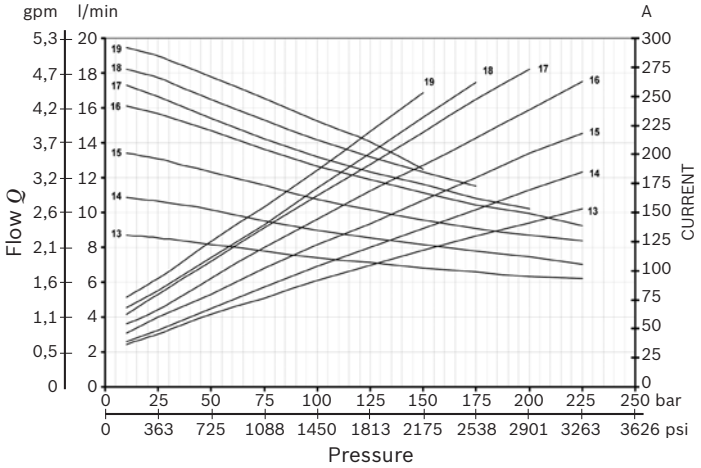

S2 - S3 performance

Amps	S2 (min.)	S3(%) (10 min.)
125	11	20%
150	7	13%
175	5	10%
200	3,5	8%
250	2,2	5%

Note
The values of the curves may change slightly depending on the brand / model of pump that is mounted.

Relay

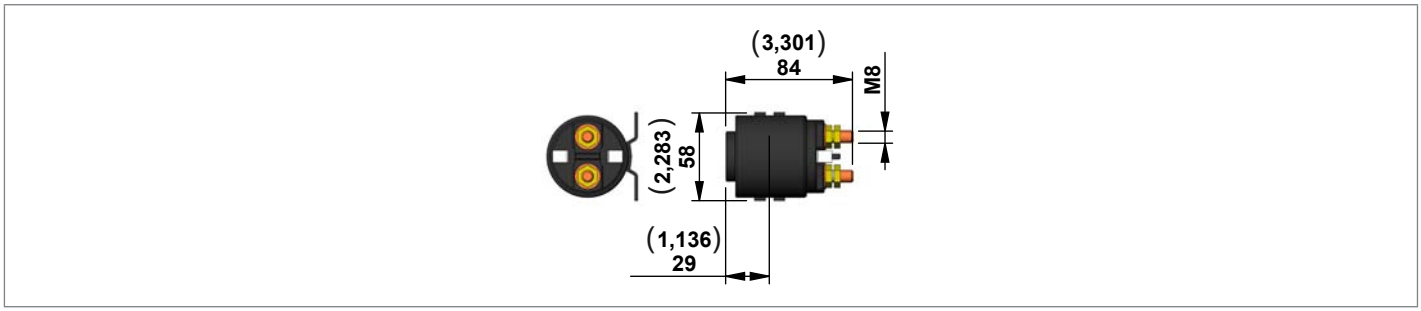

Starting Relay **High Performance** (silver plate contact)

Code	Voltage (V)	Nominal Current (A)	Short time Current (A)	Protection INDEX	UL Certified	Type	Material Number
A	Without Relay						
E	24	150	350	IP54	NO	C165525000	R932000691

Kit Motor + Relay

Motor + Relay	Type	Material Number
C163+relay 24V HIGH performance	K396824163E	R930042326

Junction Elements for D.C. Electric Motor Standard Flange

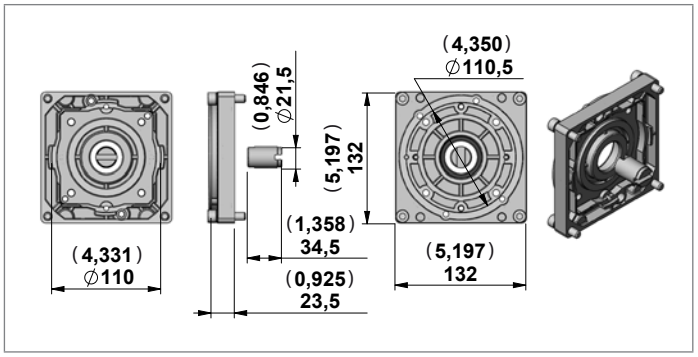

Junction Elements for manifolds **KE** and **KS** series

Code	Series	Type	Material Number
TR54	**KE - KS**	K01KE970TR054	R932001904

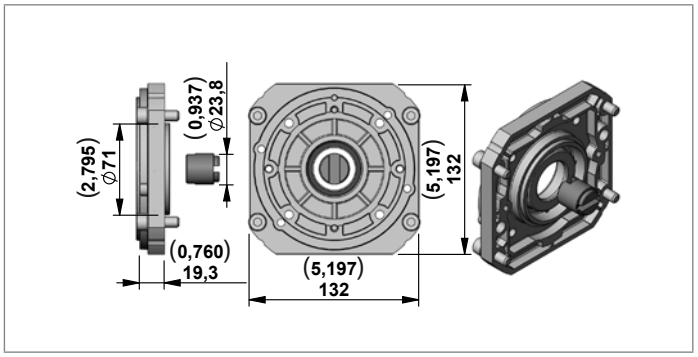

Junction Elements for manifolds **K** series

Code	Series	Type	Material Number
E62	**K**	K01K3970TR107	R932001936

Dimensions [mm (inches)]

D.C. Electric Motors Low Noise High Performance

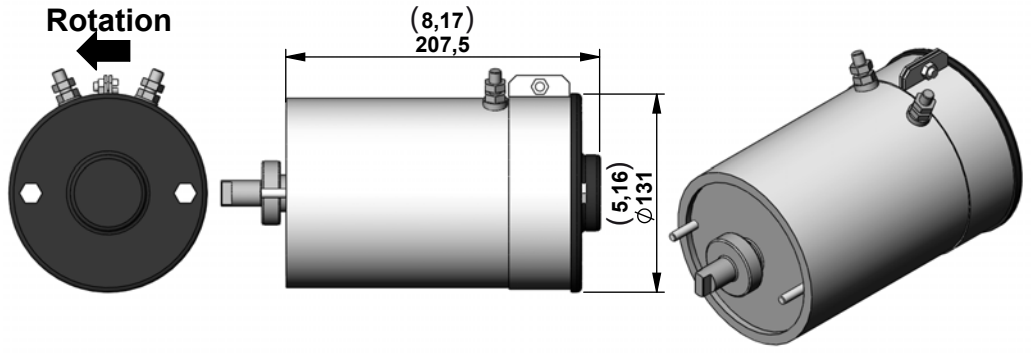

Code	Voltage (V)	Power (W)	Duty Cycle S3% S2 min.	Thermal Switch	UL Certified	Protection index	Type	Material Number
C151	24	3000	8% 4 min	NO	NO	IP 44	C1620S1047	R932000240
C140	24	3000	8% 4 min	YES	NO	IP 44	C1620S1040	R932000235

Electric Motor C151-C140 (24V – 3000W) Diagrams

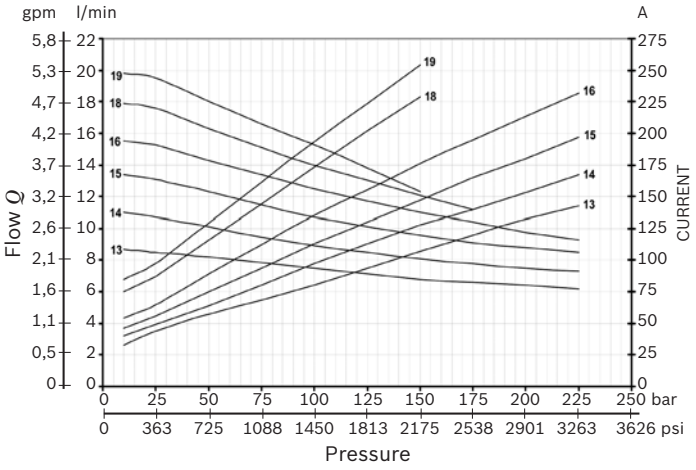

S2 - S3 performance

Amps	S2 (min.)	S3(%) (10 min.)
75	18	25%
100	12	17%
125	8,5	13%
150	6	10%
175	5	8%
200	4	7%

Note
The values of the curves may change slightly depending on the brand / model of pump that is mounted.

Relay

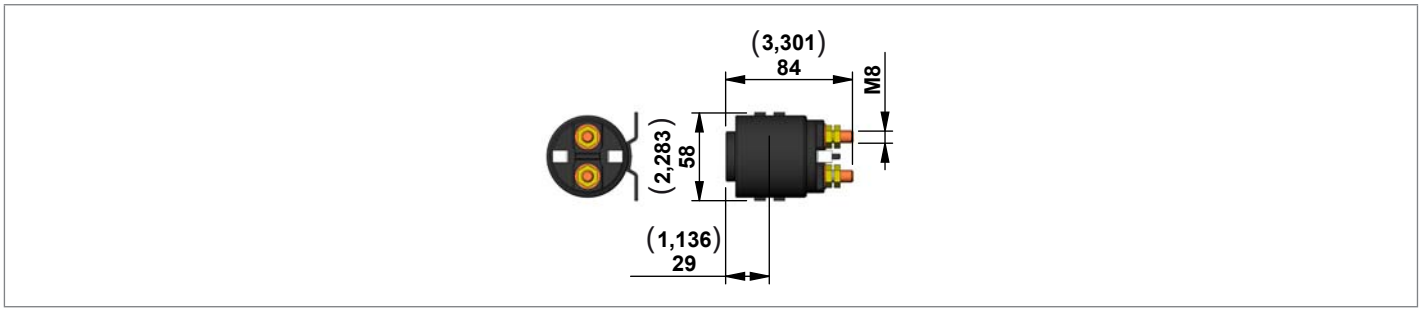

Starting Relay **High Performance** (silver plate contact)

Code	Voltage (V)	Nominal Current (A)	Short time Current (A)	Protection INDEX	UL Certified	Type	Material Number
A	Without Relay						
E	24	150	350	IP54	NO	C165525000	R932000691

Kit Motor + Relay

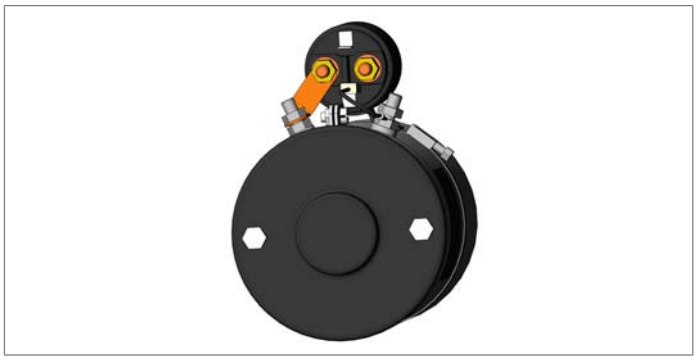

Motor + Relay	Type	Material Number
C151+relay 24V HIGH performance	K396824151E	R932002800
C140+relay 24V HIGH performance	K396824140E	R932002788

Junction Elements for D.C. Electric Motor Standard Flange

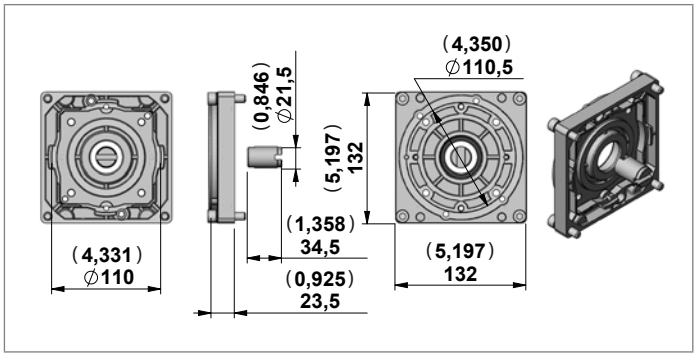

Junction Elements for manifolds **KE** and **KS** series

Code	Series	Type	Material Number
TR54	**KE - KS**	K01KE970TR054	R932001904

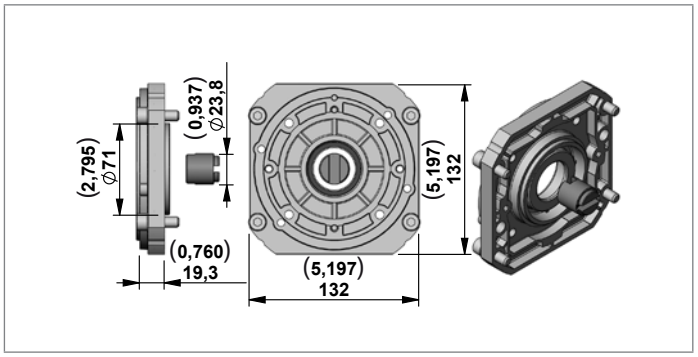

Junction Elements for manifolds **K** series

Code	Series	Type	Material Number
E62	**K**	K01K3970TR107	R932001936

D.C. Electric Motors High Performance Fan Cooled

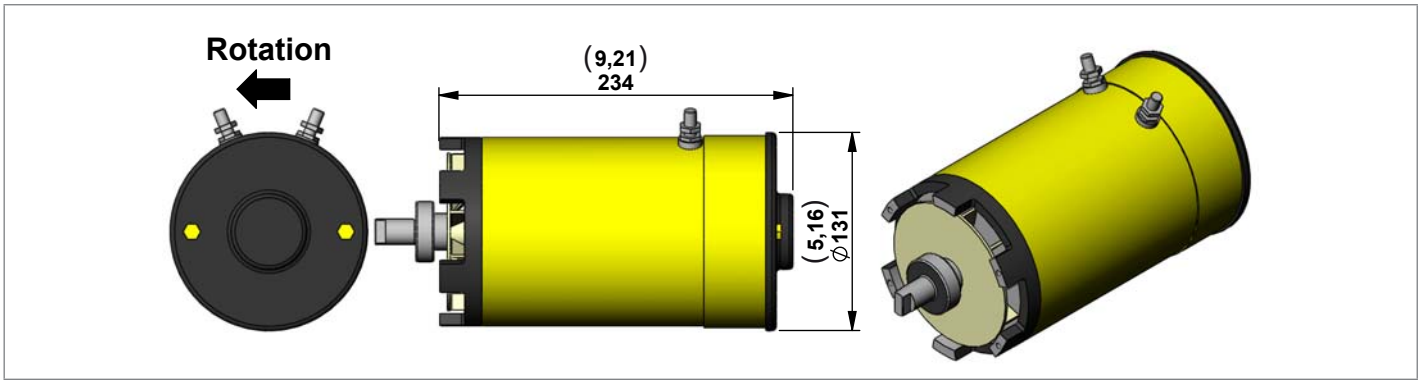

Code	Voltage (V)	Power (W)	Duty Cycle S3% S2 min.	Thermal Switch	UL Certified	Protection index	Type	Material Number
C111	24	3000	20% 6 min	NO	NO	IP 12	C1620S1011	R932000208

Electric Motor C111 (24V – 3000W) Diagrams

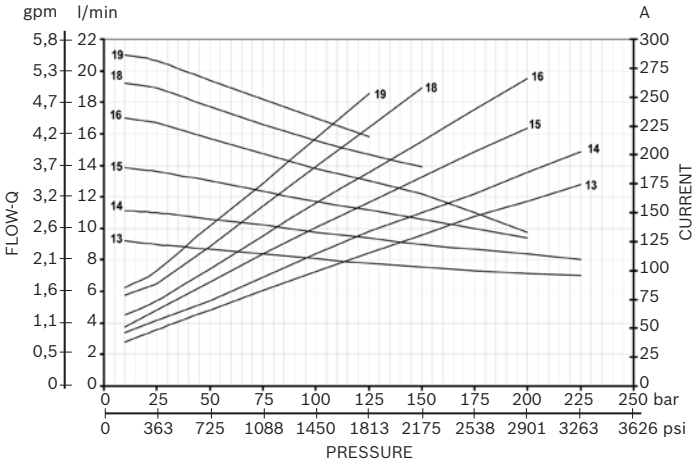

S2 - S3 performance

Amps	S2 (min.)	S3(%) (10 min.)
125	20	55%
150	10	32%
175	7,5	25%
200	4,5	15%
250	3	10%

Note
The values of the curves may change slightly depending on the brand / model of pump that is mounted.

Relay

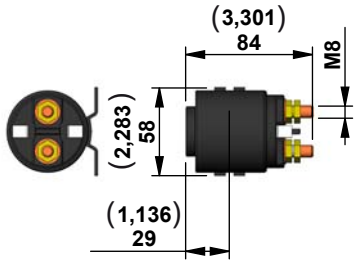

Starting Relay **High Performance** (silver plate contact)

Code	Voltage (V)	Nominal Current (A)	Short time Current (A)	Protection INDEX	UL Certified	Type	Material Number
A	Without Relay						
E	24	150	350	IP54	NO	C165525000	R932000691

Kit Motor + Relay

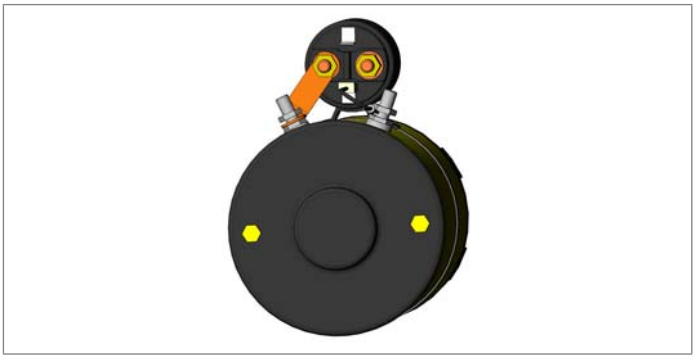

Motor + Relay	Type	Material Number
C111+relay 24V HIGH performance	K396824111E	R932002777

Junction Elements for D.C. Electric Motor Standard Flange

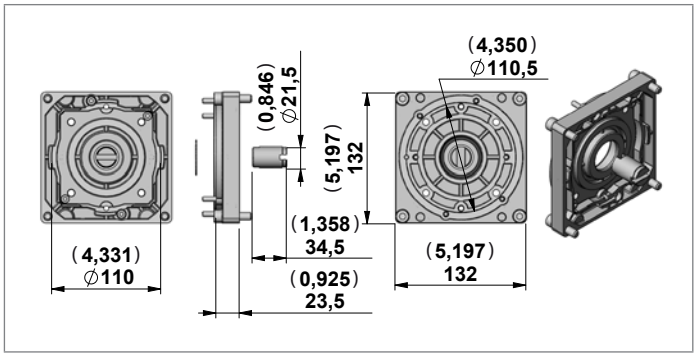

Junction Elements for manifolds **KE** and **KS** series

Code	Series	Type	Material Number
TR53	**KE - KS**	K01KE970TR053	R932001903

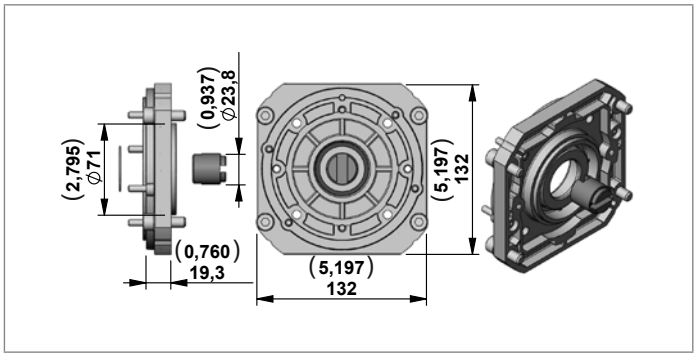

Junction Elements for manifolds **K** series

Code	Series	Type	Material Number
E63	**K**	K01K3970TR085	R932001927

Central Manifold KE

M02

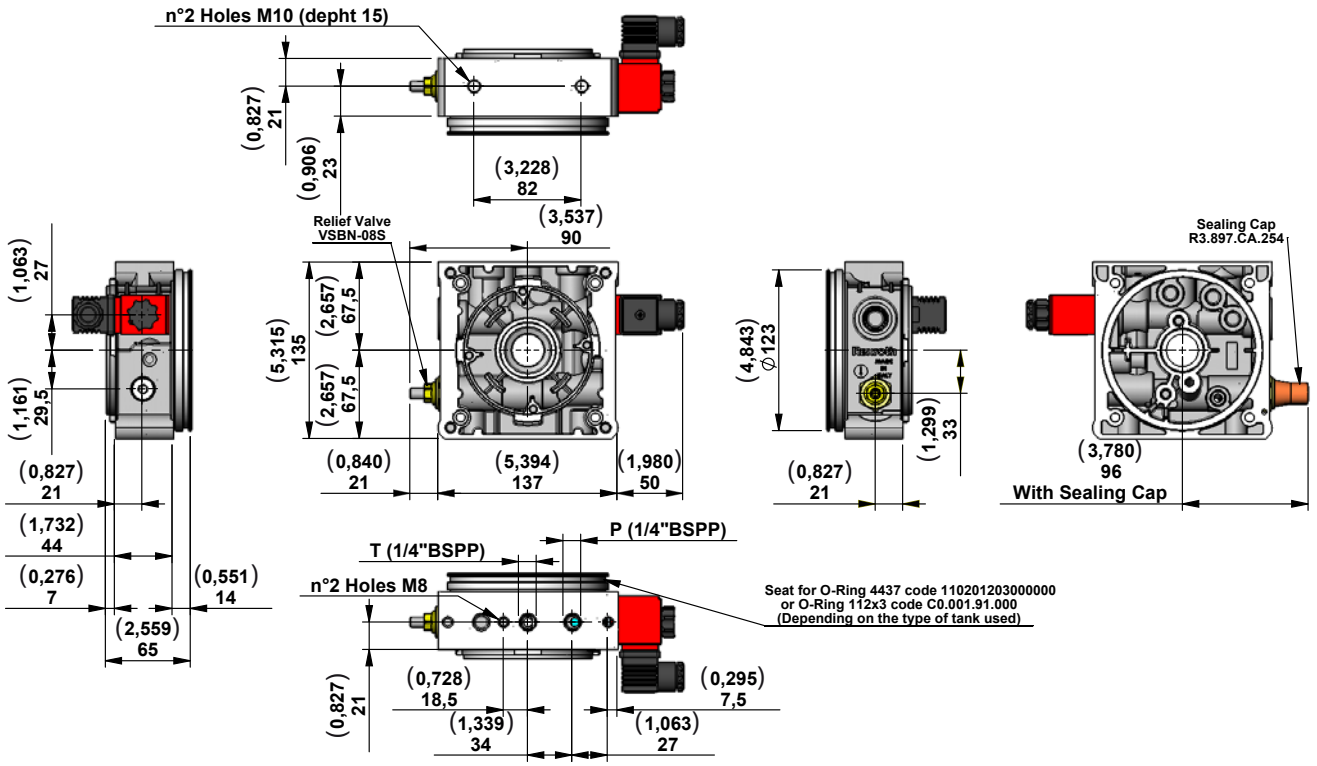

Manifold Code with Relief Valve Pressure Range	Presure Range bar (psi)	Type	Material Number
M02/05	10-55 (145-798)	202A000	R930052187
M02/10	35-100 (508-1450)	202B000	R930052188
M02/20	90-250 (1305-3626)	202C000	R930052190
M02/35	175-345 (2538-5004)	202D000	R930052191

View Manifold Tank side

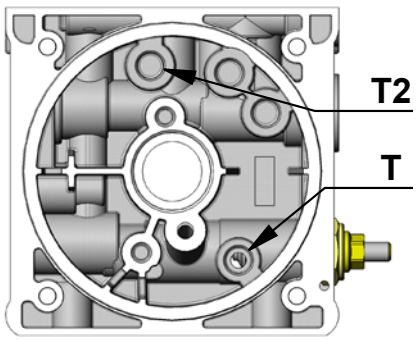

Manifold Hydraulic Diagram

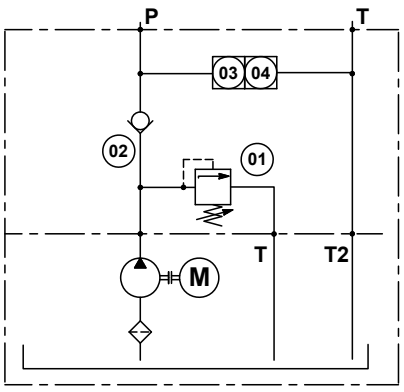

M02 with valves

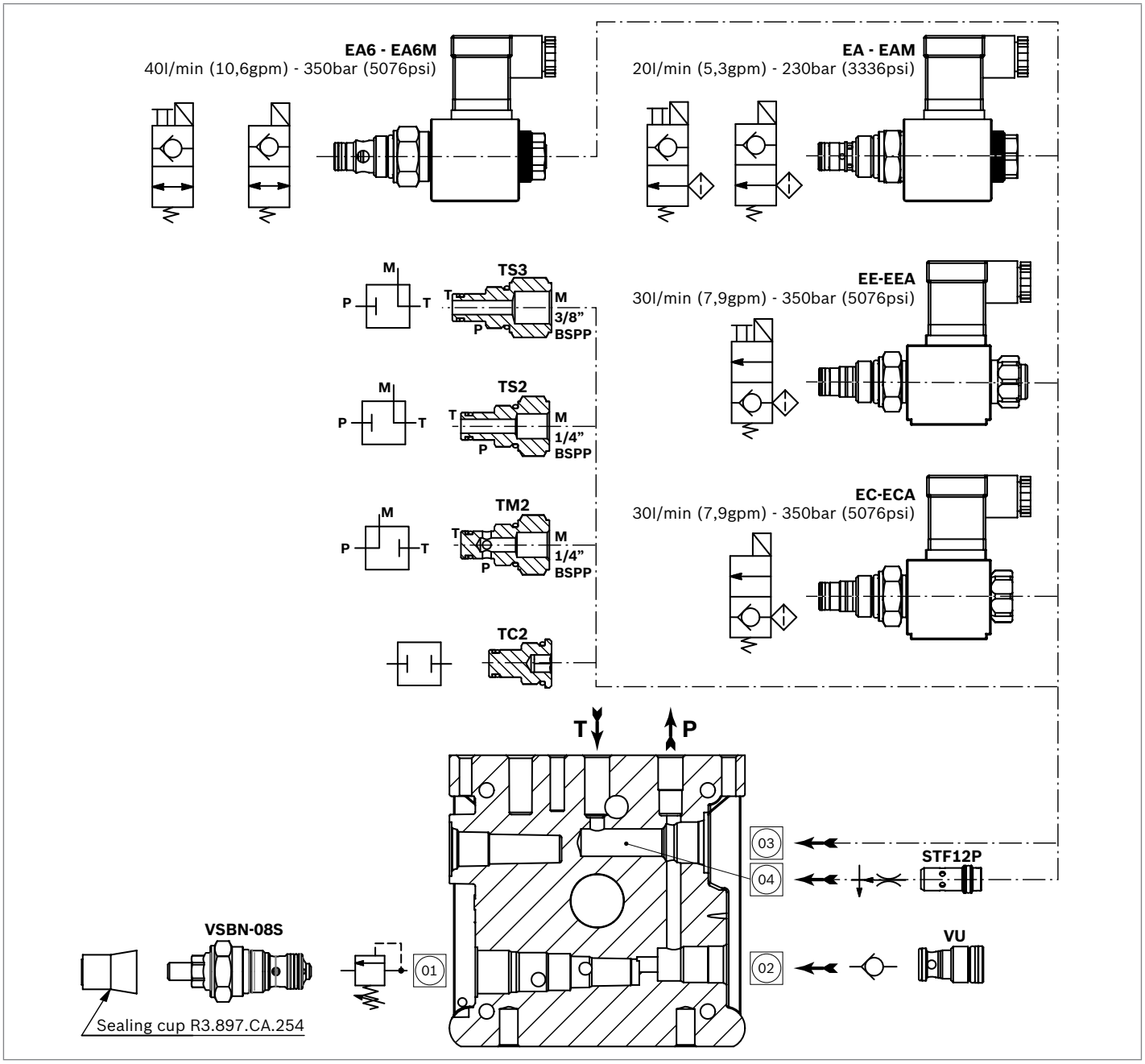

Main Realizable Diagrams

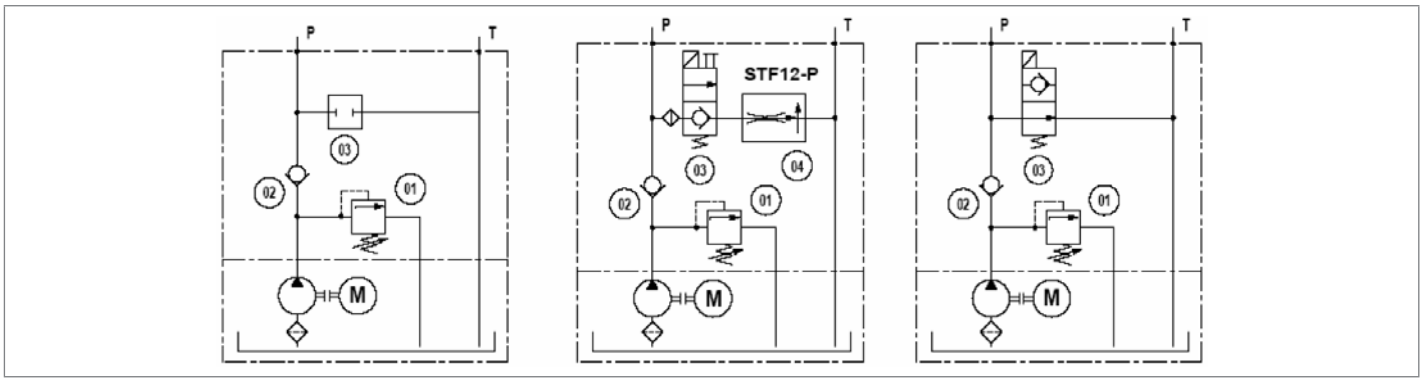

Central Manifold KE

M03

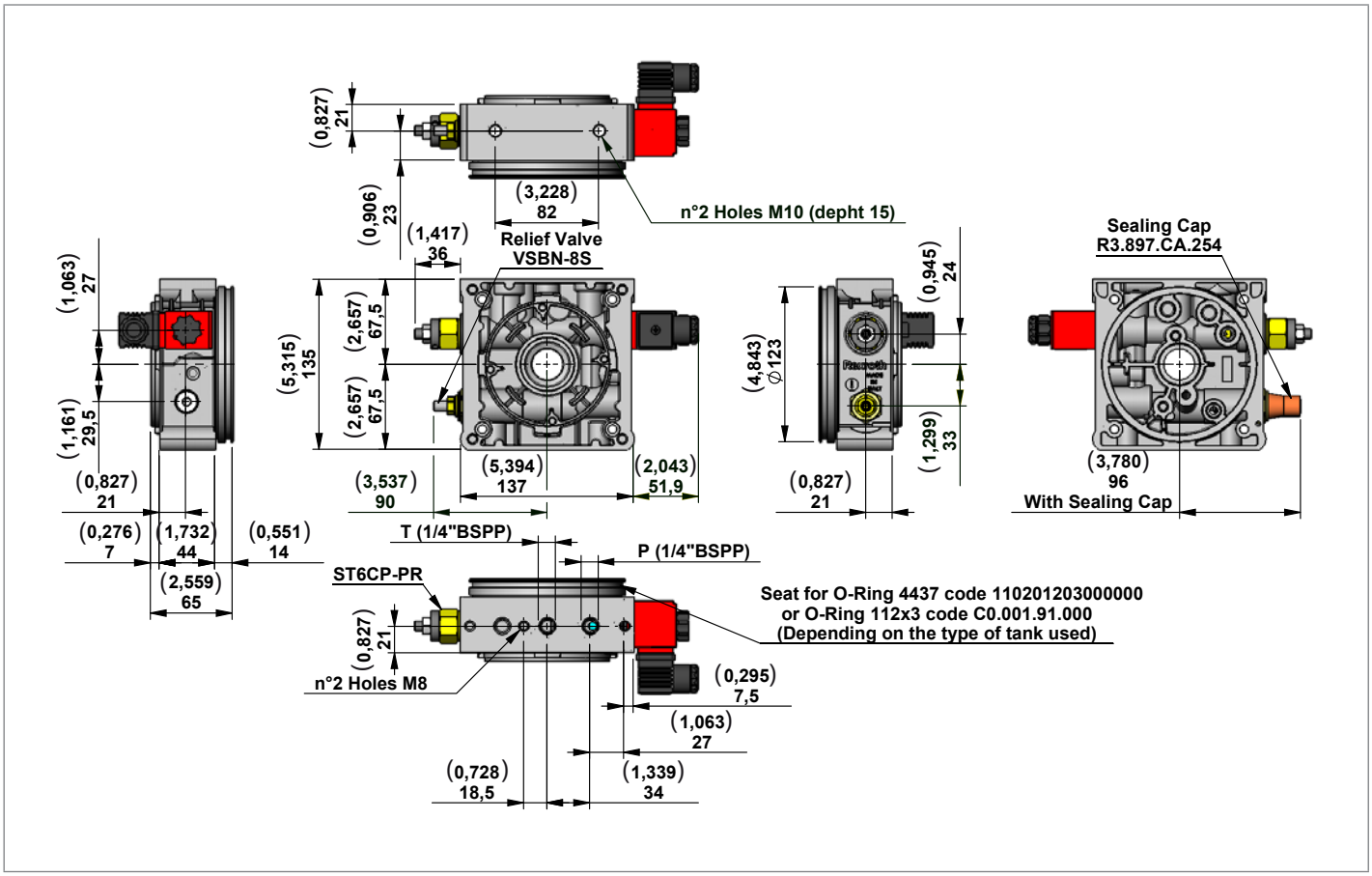

Manifold Code with Relief Valve Pressure Range	Presure Range bar (psi)	Type	Material Number
M03/05	10-55 (145-798)	203A000	R930052192
M03/10	35-100 (508-1450)	203B000	R930052286
M03/20	90-250 (1305-3626)	203C000	R930052193
M03/35	175-345 (2538-5004)	203D000	R930052194

View Manifold Tank side

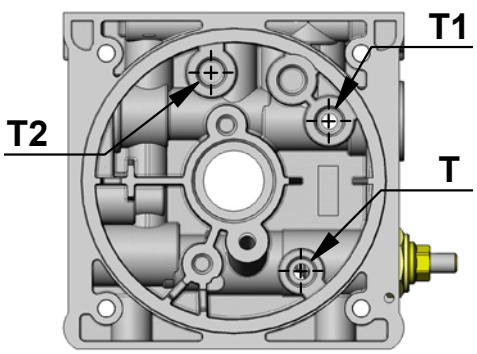

Manifold Hydraulic Diagram

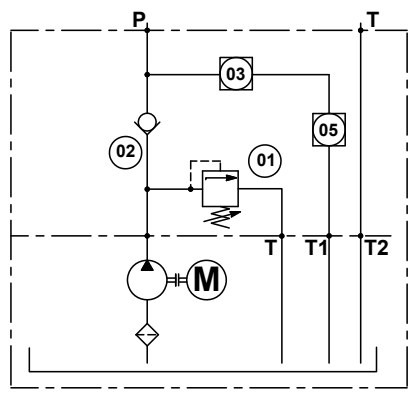

M03 with valves

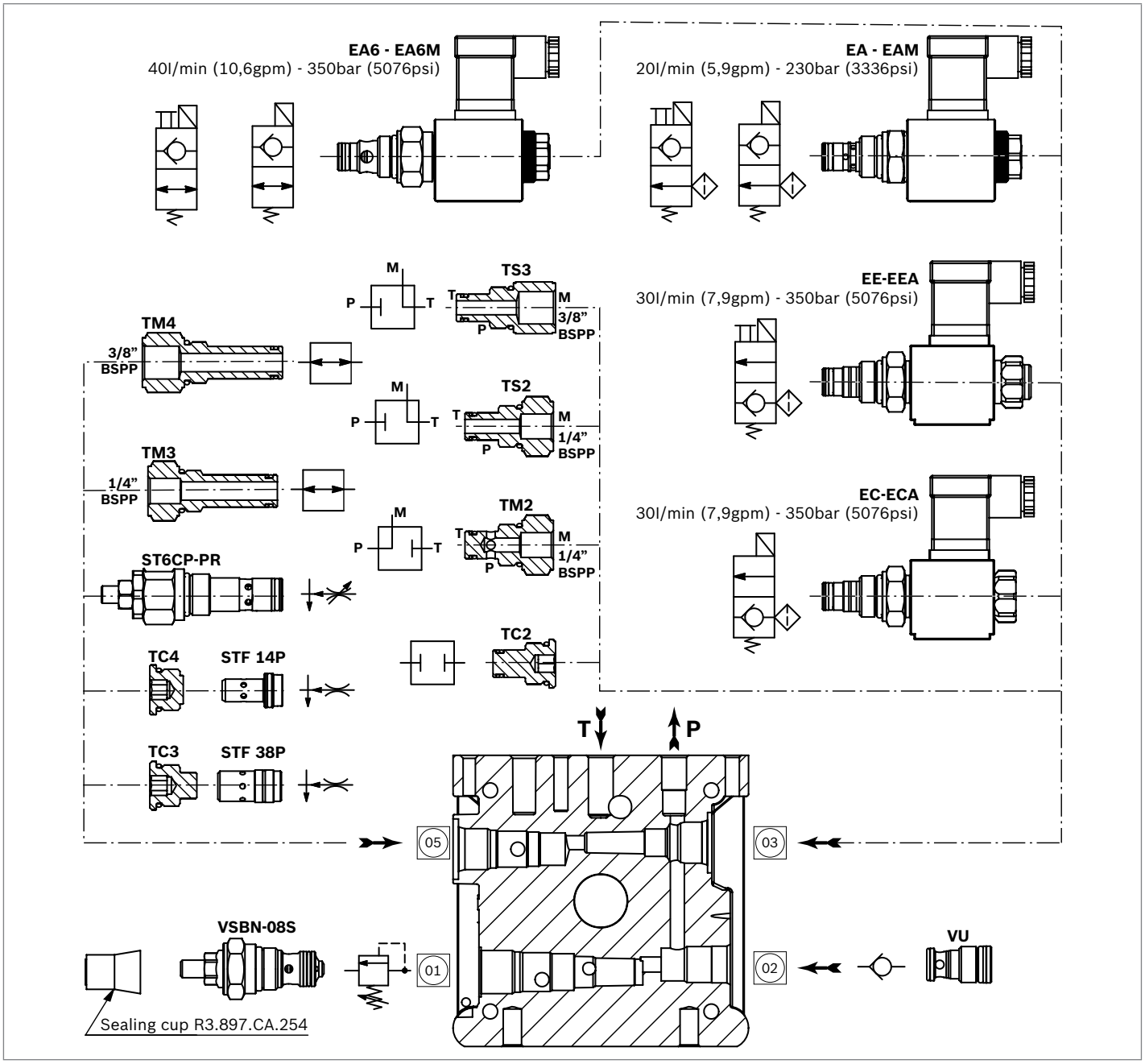

Main Realizable Diagrams

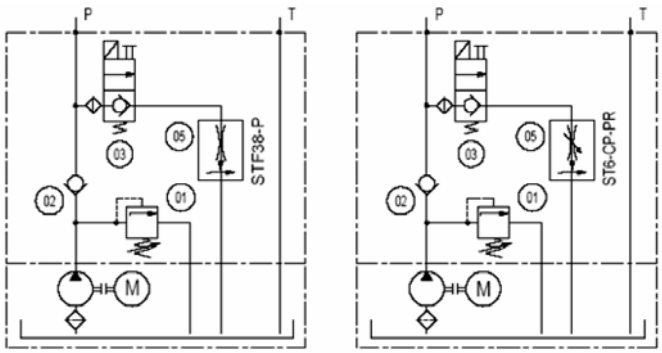

Central Manifold KE

M09

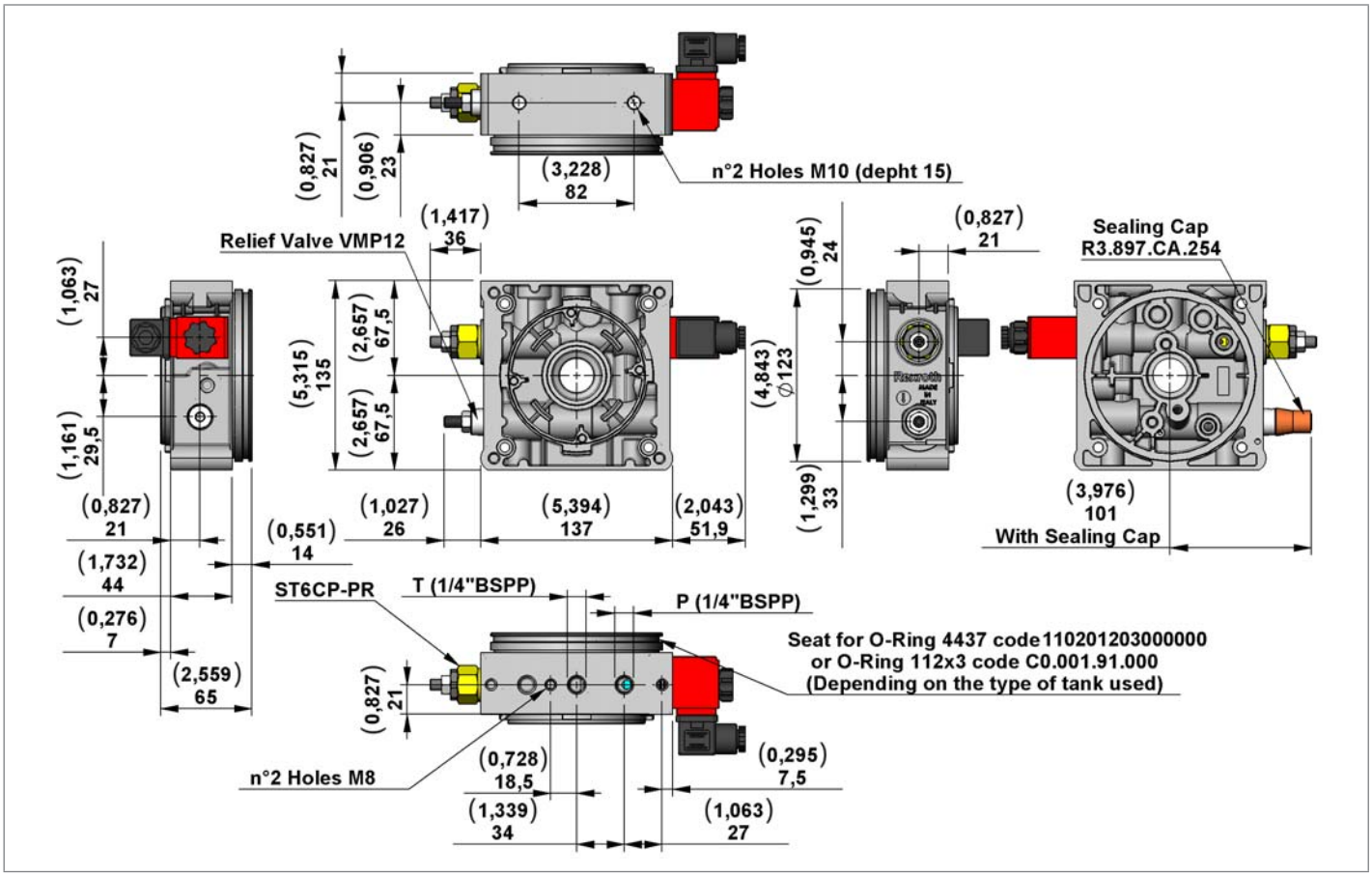

Manifold Code with Relief Valve Pressure Range	Pressure Range bar (psi)	Closing Flow l/min (gpm)	Pump displacement at 1450 rpm cc/rev	Flow at 1450 rpm l/min (gpm)	Pump displacement at 2850 rpm cc/rev	Flow at 2850 rpm l/min (gpm)	Type	Material Number
M09/13	80-300 (1160-4351)	1,1 (0,29)	1,1 (11)	1,6 (0,42)	-	-	209I00013	R932010272
M09/16	80-300 (1160-4351)	1,7 (0,45)	1,6 (12)	2,3 (0,61)	-	-	209I00016	R932008838
M09/17	80-300 (1160-4351)	2 (0,53)	2 (13)	2,9 (0,77)	1,1 (11)	3,2 (0,85)	209I00017	R932008839
M09/18	80-300 (1160-4351)	2,3 (0,61)	2,5 (14)	3,6 (0,95)	-	-	209I00018	R932008840
M09/22	80-300 (1160-4351)	3,5 (0,92)	3,15 (15)	4,6 (1,22)	1,6 (12)	4,6 (1,22)	209I00022	R930052412
M09/25	80-300 (1160-4351)	4,2 (1,11)	4 (16)	5,8 (1,53)	2 (13)	5,7 (1,51)	209I00025	R932010299

View Manifold Tank side

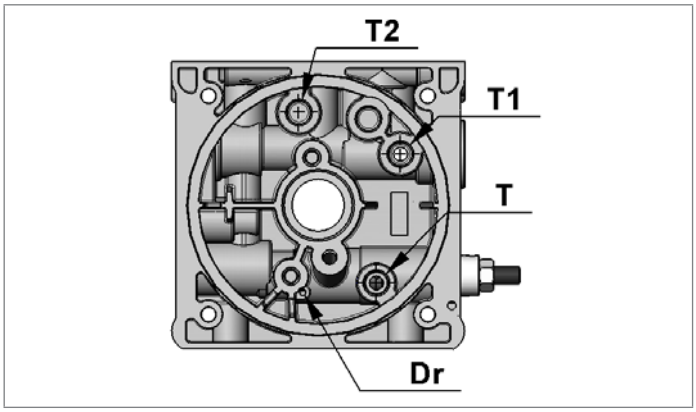

Manifold Hydraulic Diagram

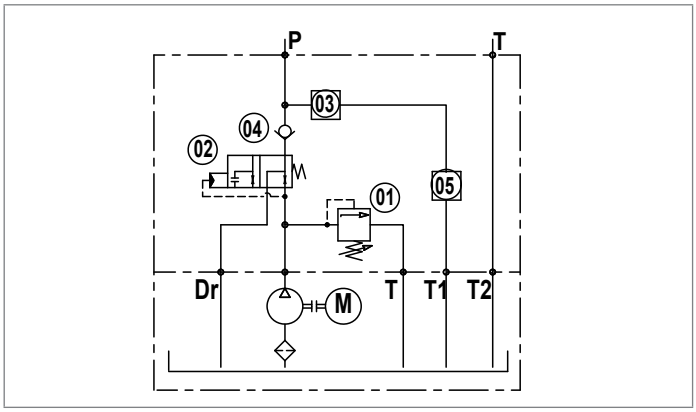

M09 with valves

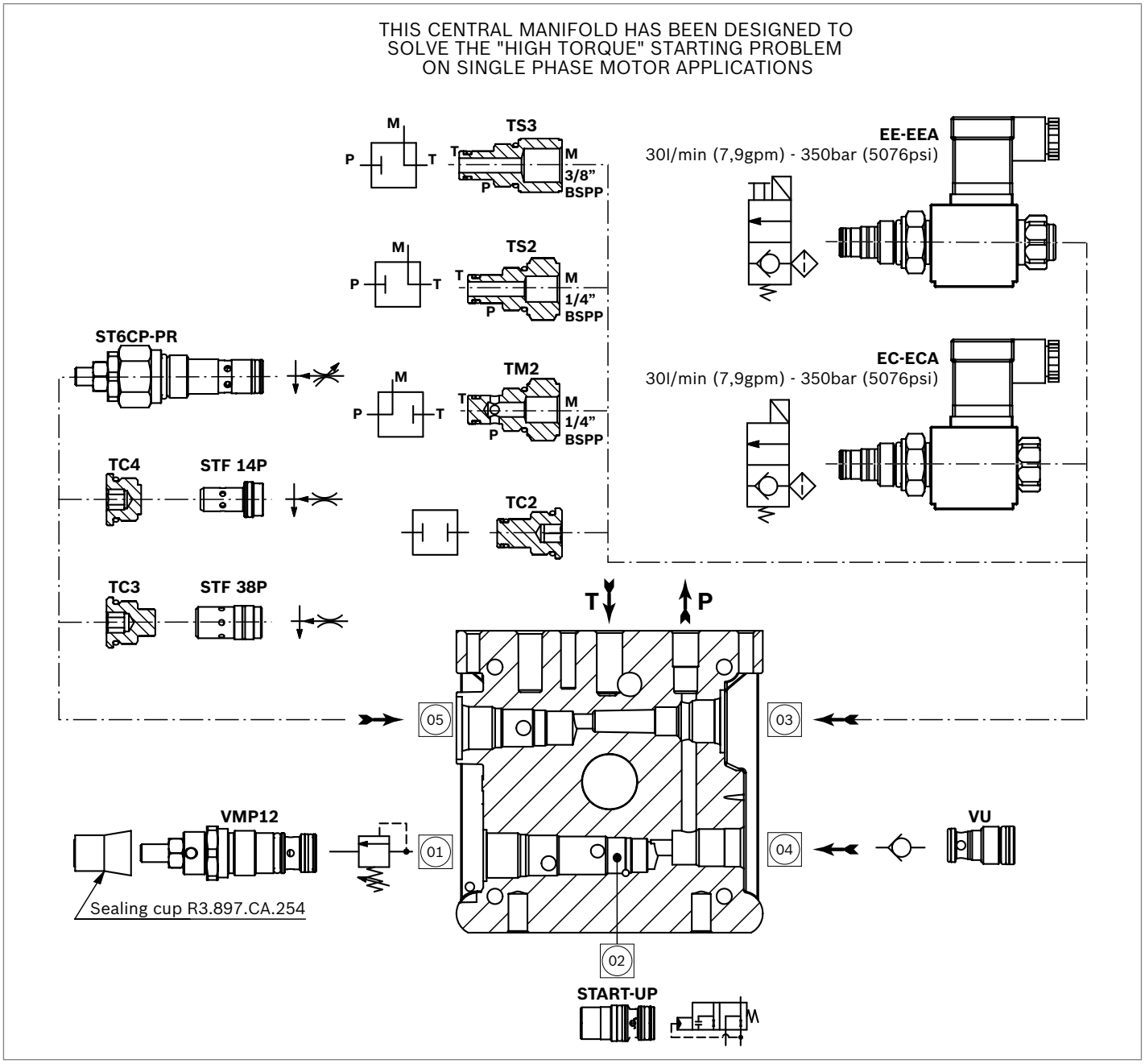

Main Realizable Diagrams

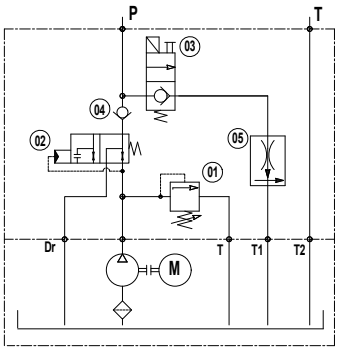

Central Manifold KE

M04

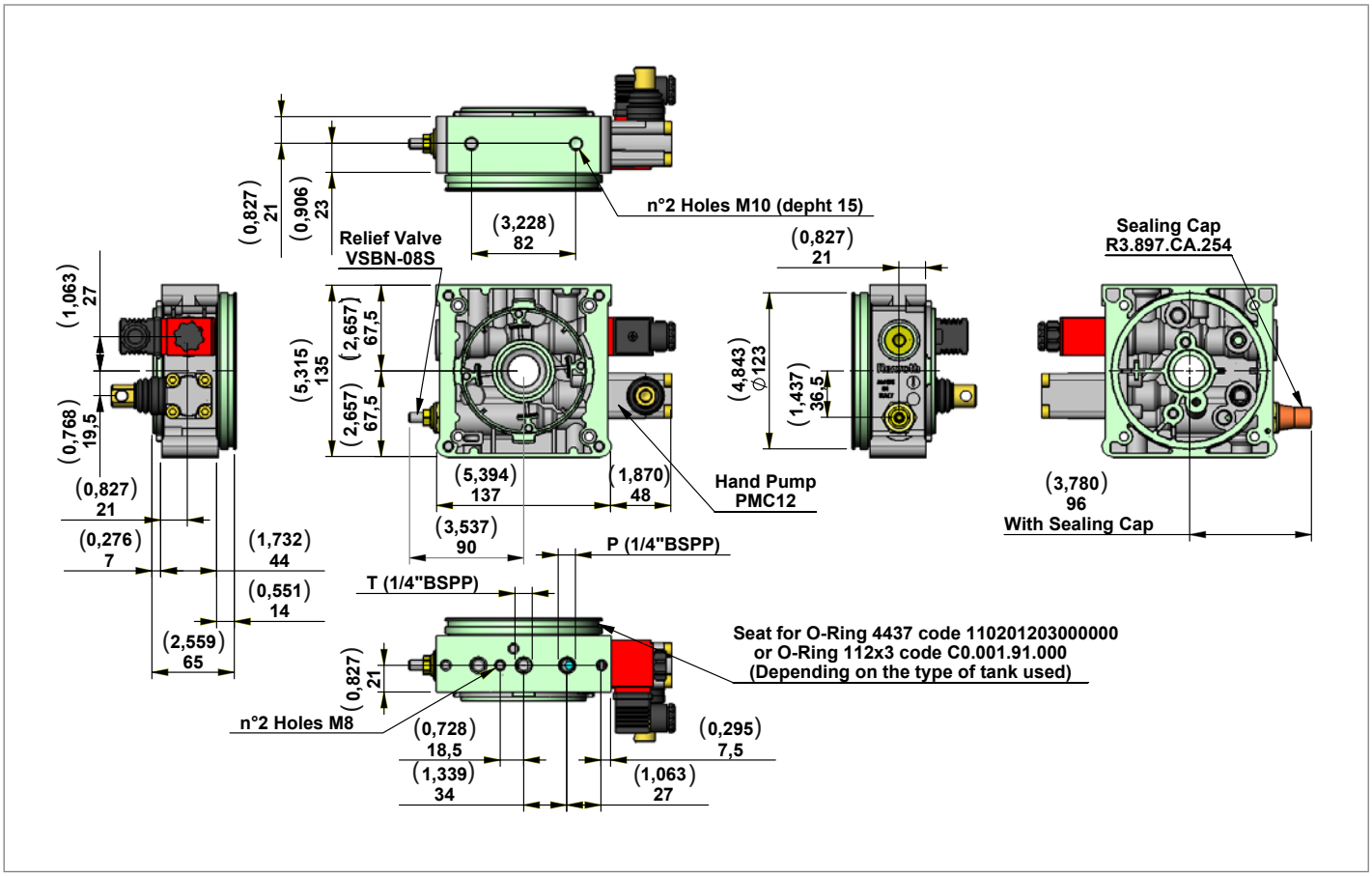

Manifold Code with Relief Valve Pressure Range	Presure Range bar (psi)	Type	Material Number
M04/05	10-55 (145-798)	204A000	R930052195
M04/10	35-100 (508-1450)	204B000	R930052196
M04/20	90-250 (1305-3626)	204C000	R930052197
M04/35	175-345 (2538-5004)	204D000	R930052198

View Manifold Tank side

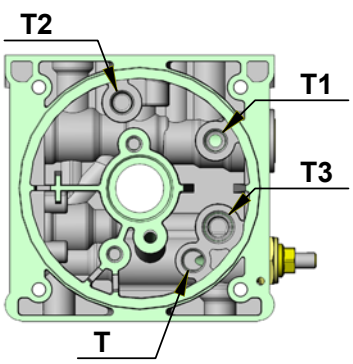

Manifold Hydraulic Diagram

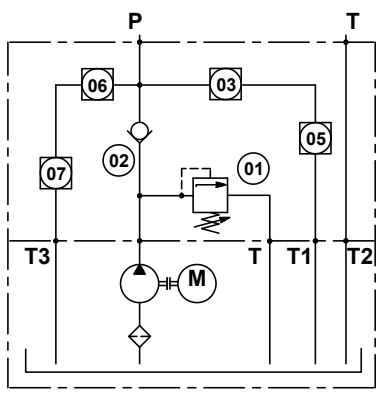

M04 with valves

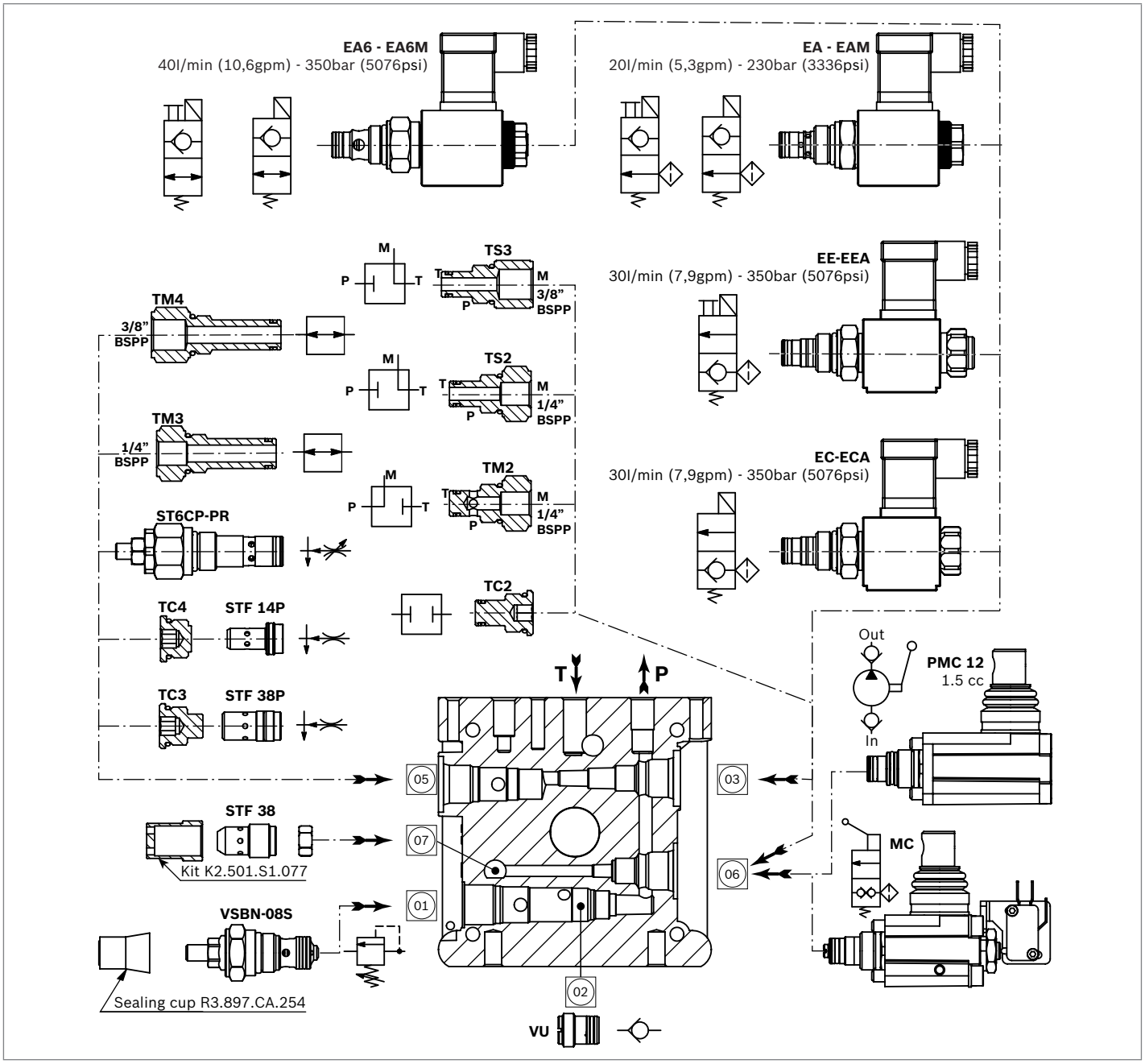

Main Realizable Diagrams

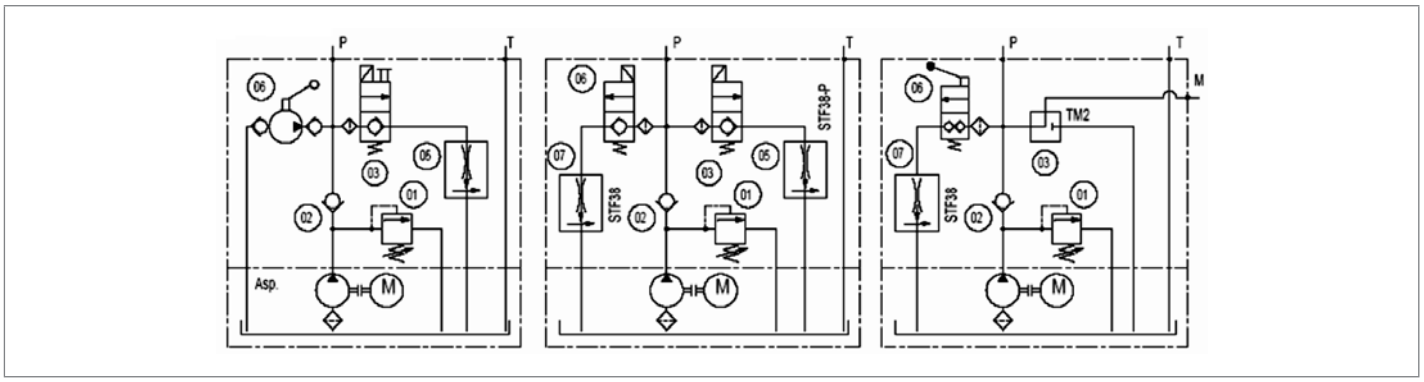

Central Manifold KE

M05

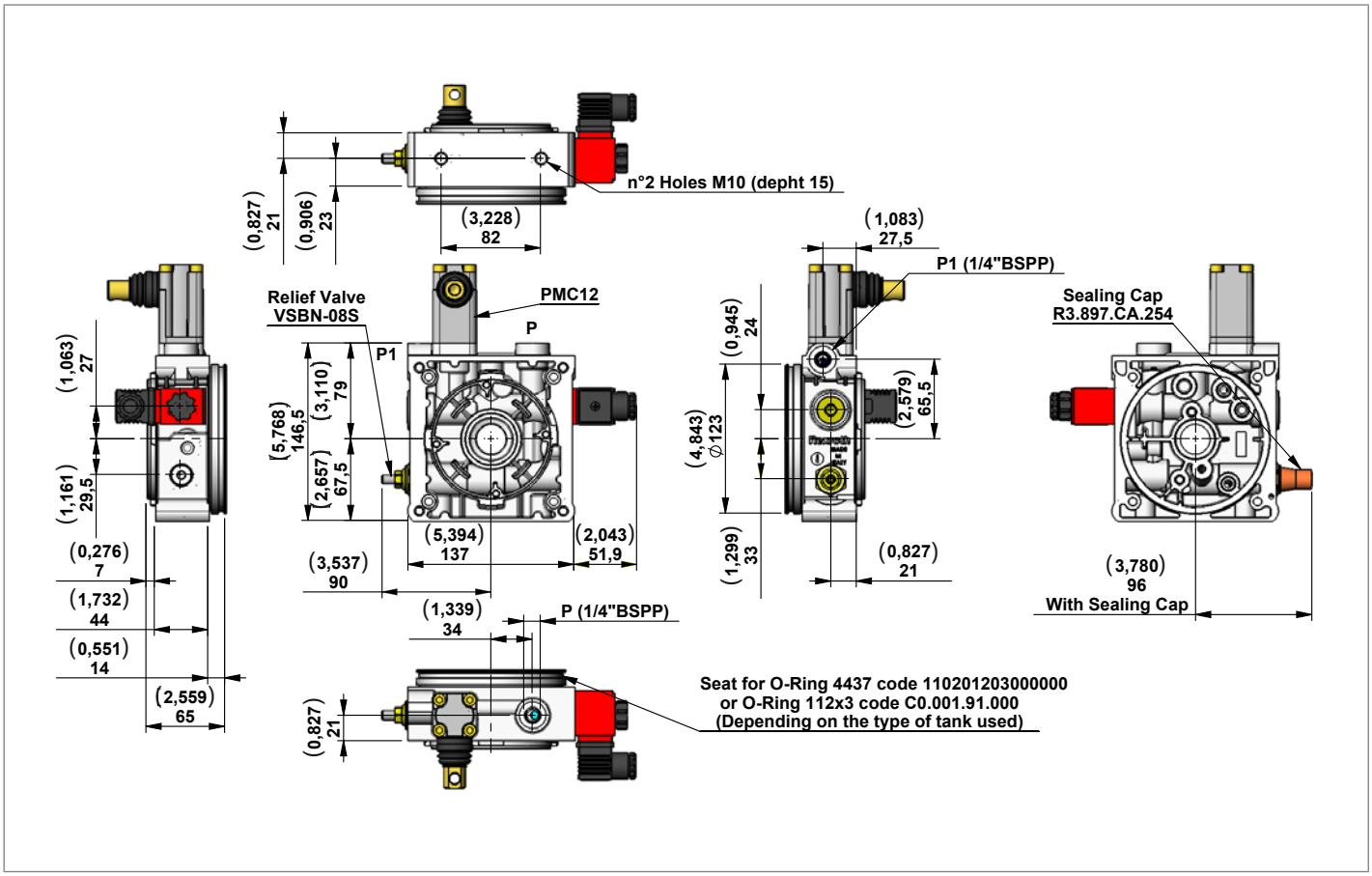

Manifold Code with Relief Valve Pressure Range	Presure Range bar (psi)	Type	Material Number
M05/05	10-55 (145-798)	205A000	R930052199
M05/10	35-100 (508-1450)	205B000	R930052200
M05/20	90-250 (1305-3626)	205C000	R930052201
M05/35	175-345 (2538-5004)	205D000	R930052202

View Manifold Tank side

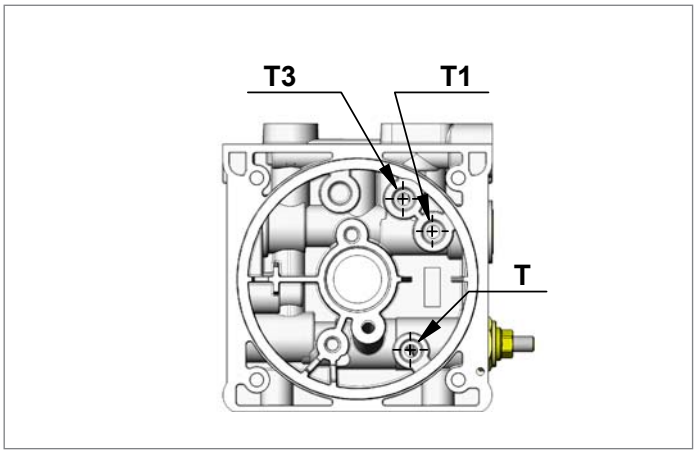

Manifold Hydraulic Diagram

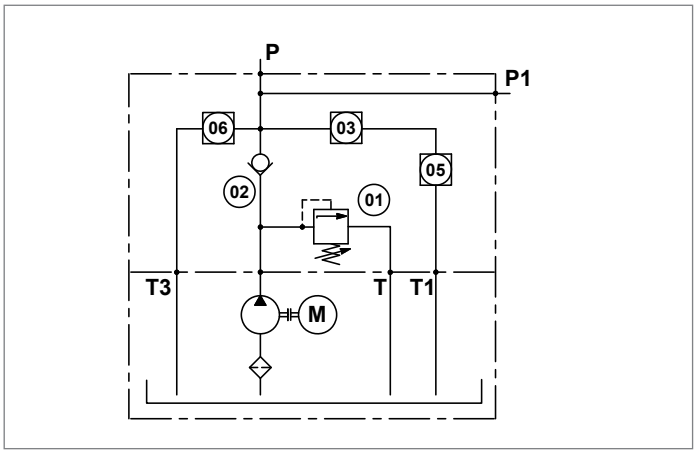

M05 with valves

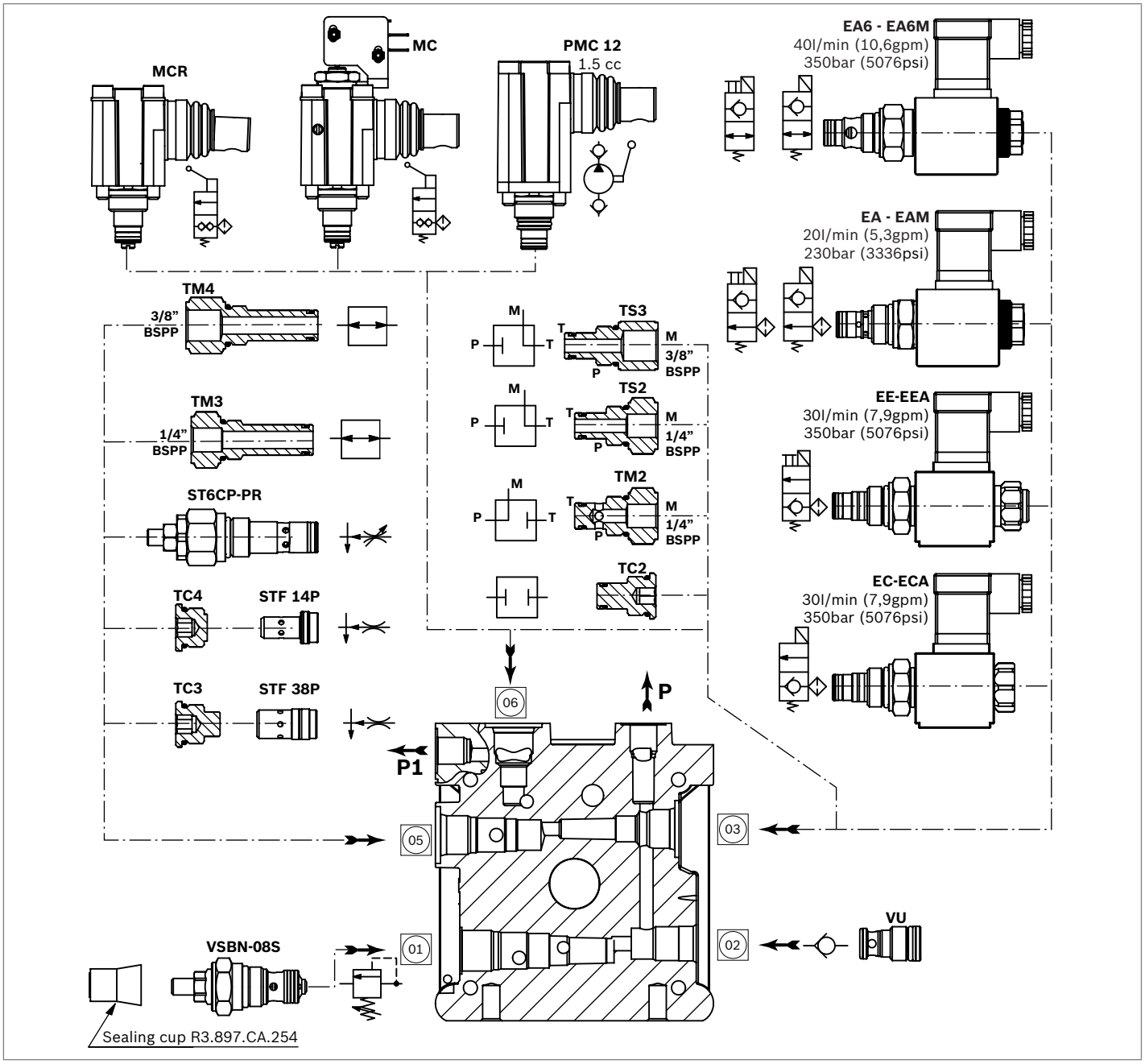

Main Realizable Diagrams

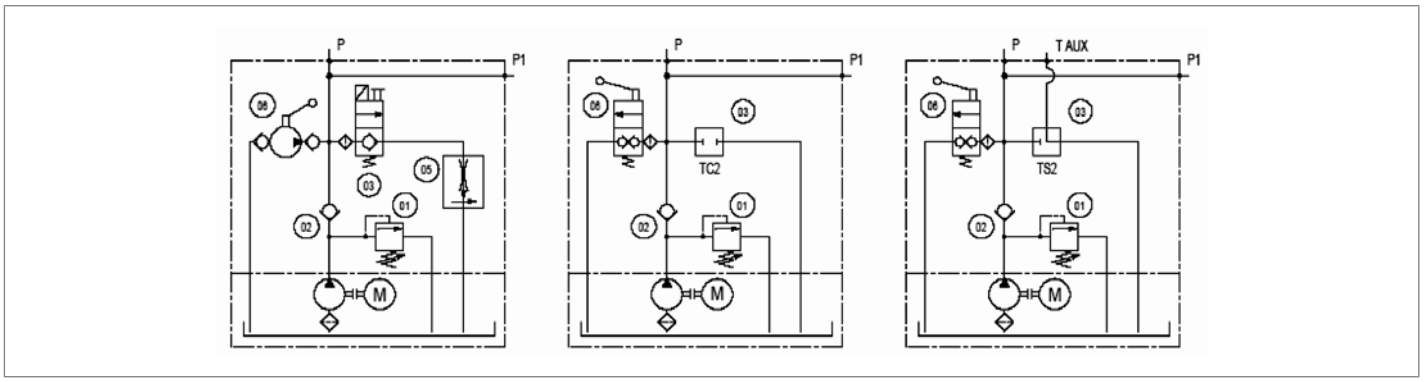

Central Manifold KE

M15

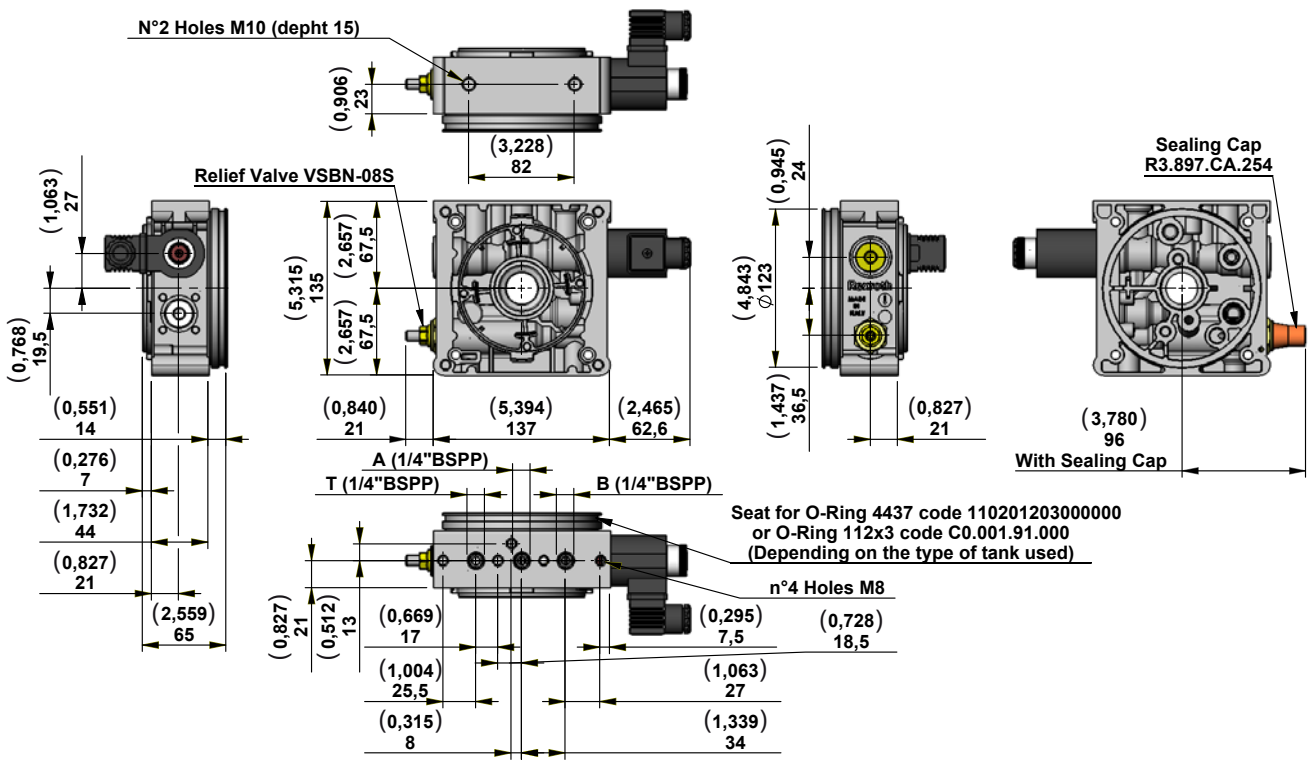

Manifold Code with Relief Valve Pressure Range	Presure Range bar (psi)	Type	Material Number
M15/05	10-55 (145-798)	215A000	R930052205
M15/10	35-100 (508-1450)	215B000	R930052206
M15/20	90-250 (1305-3626)	215C000	R930052207
M15/35	175-345 (2538-5004)	215D000	R930052208

View Manifold Tank side

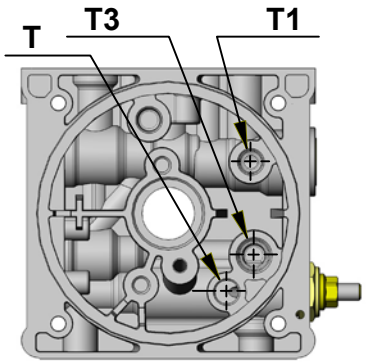

Manifold Hydraulic Diagram

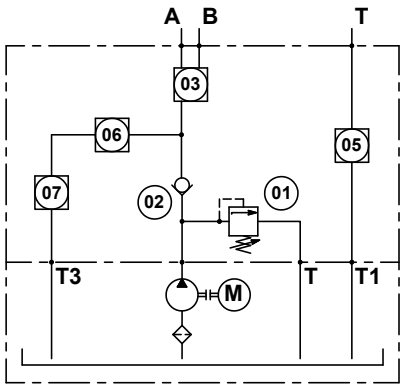

M15 with valves

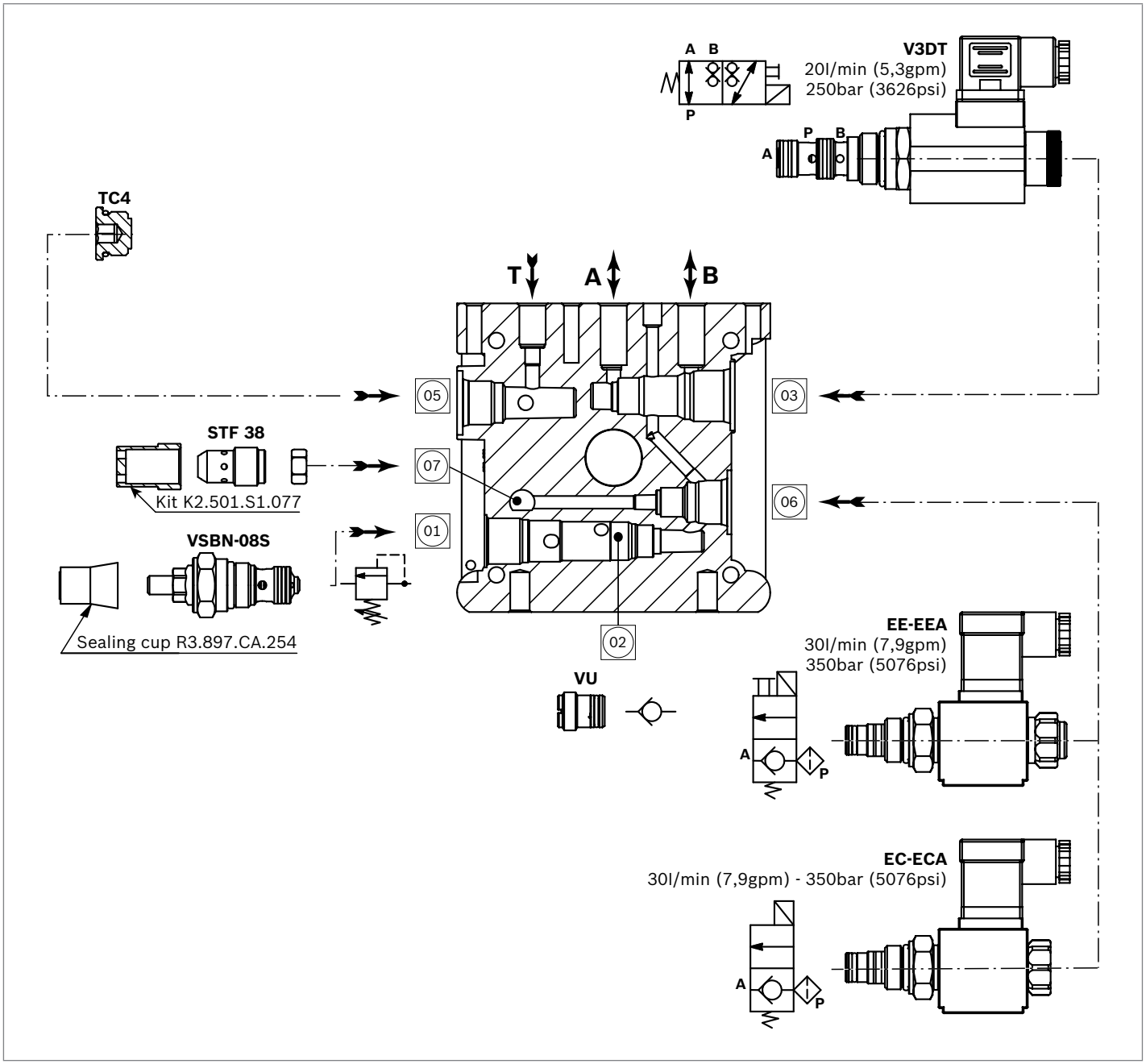

Main Realizable Diagrams

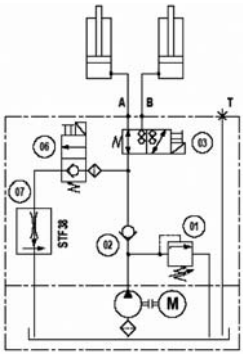

Central Manifold KE

M16

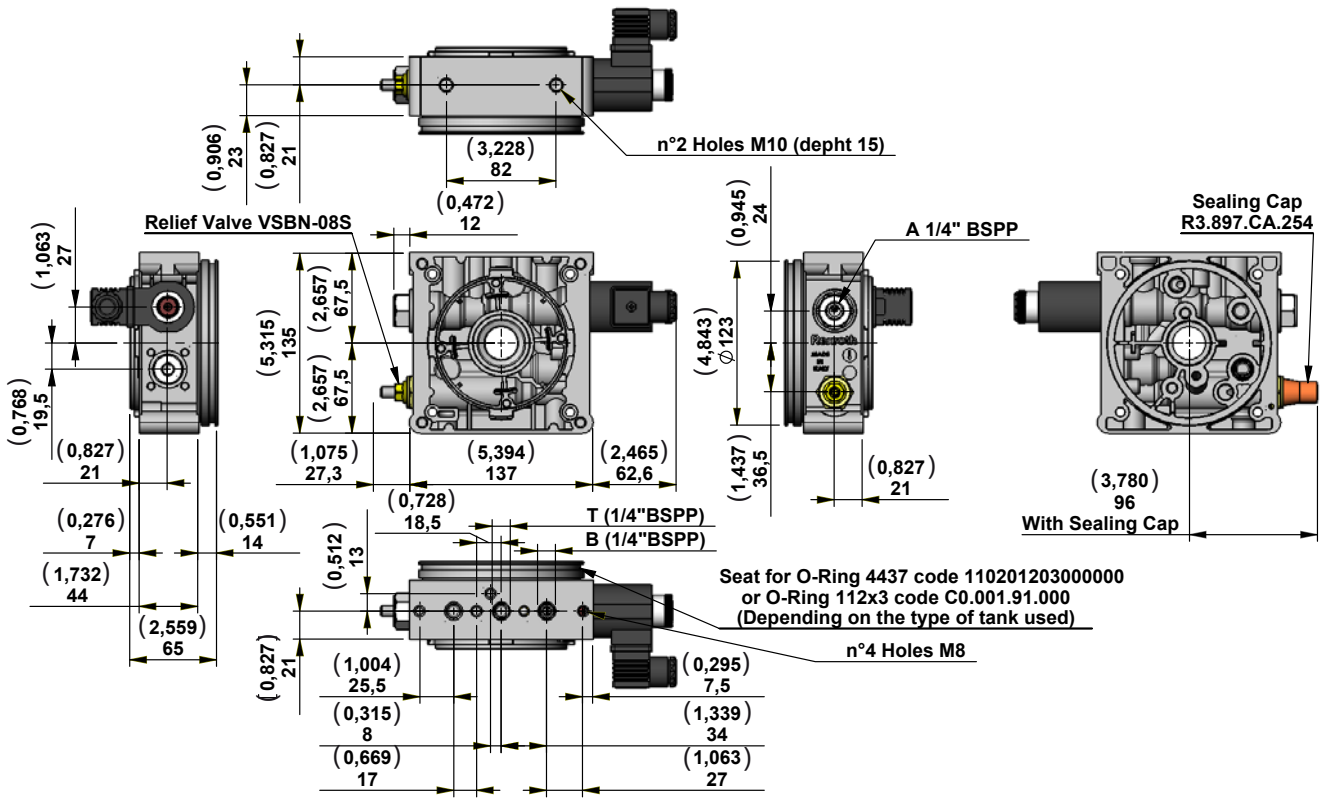

Manifold Code with Relief Valve Pressure Range	Presure Range bar (psi)	Type	Material Number
M16/05	10-55 (145-798)	216A000	R930052212
M16/10	35-100 (508-1450)	216B000	R930052213
M16/20	90-250 (1305-3626)	216C000	R930052214
M16/35	175-345 (2538-5004)	216D000	R930052215

View Manifold Tank side

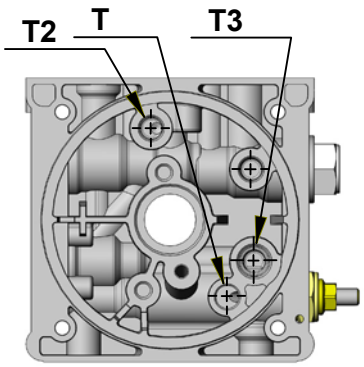

Manifold Hydraulic Diagram

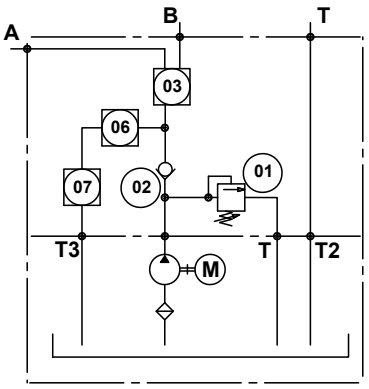

M16 with valves

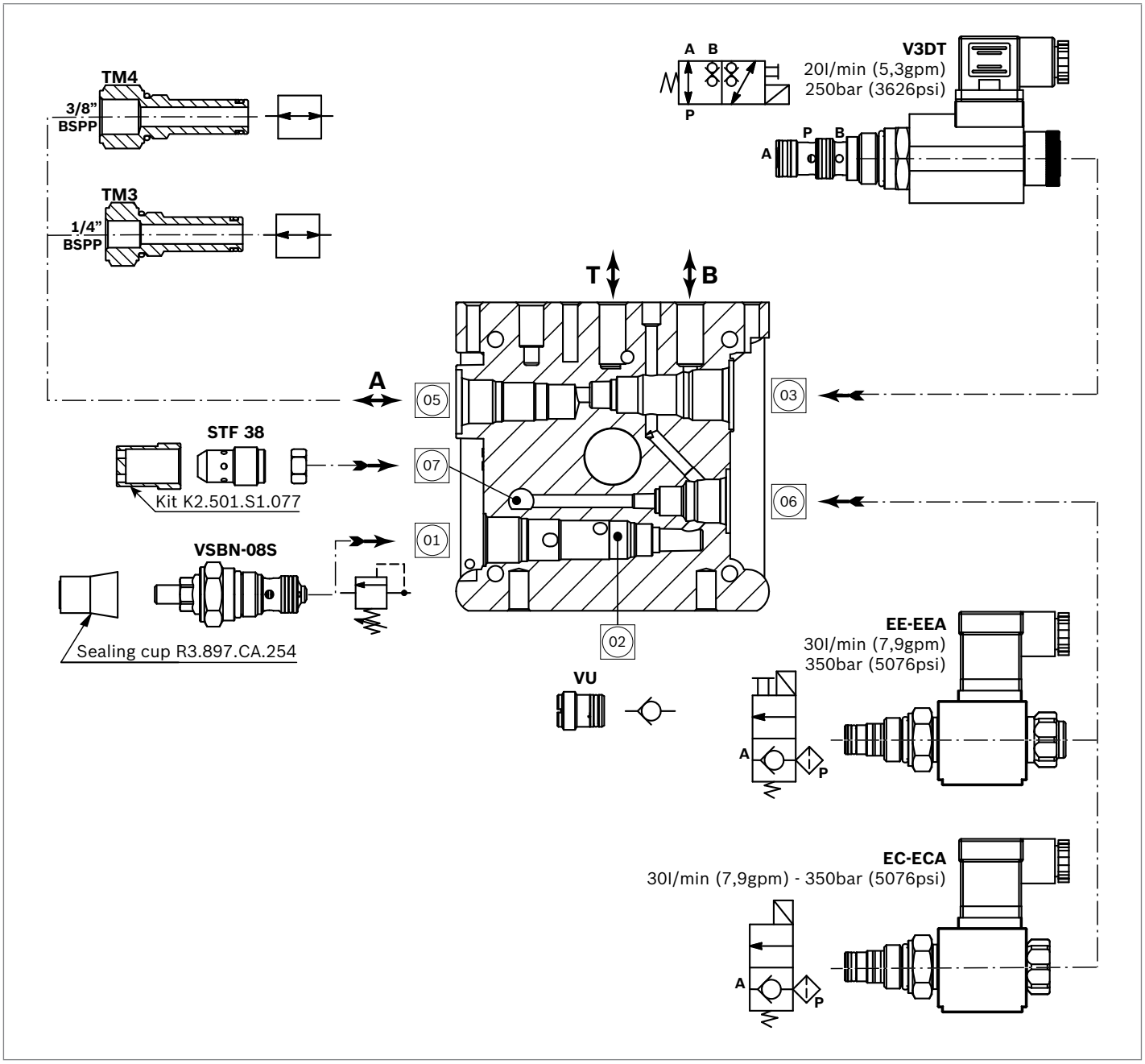

Main Realizable Diagrams

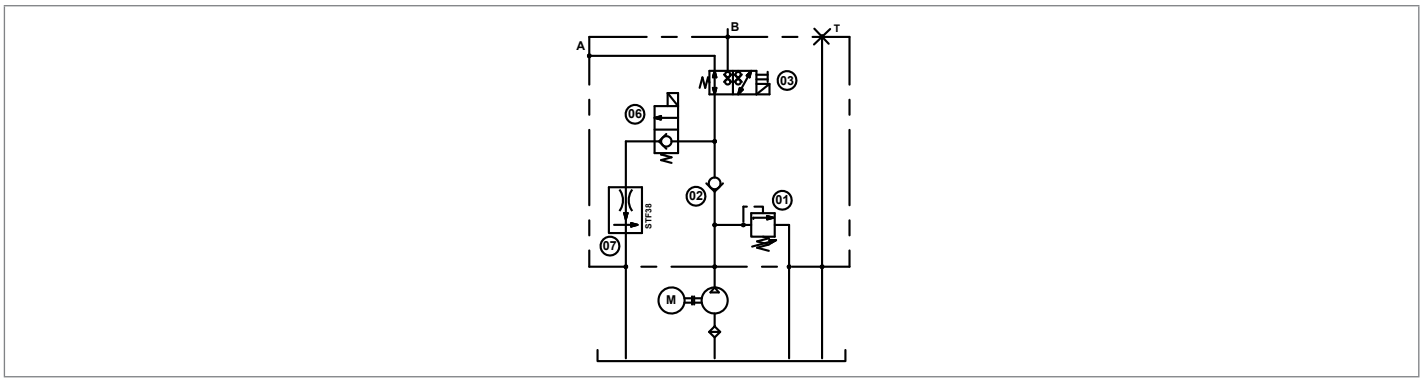

Central Manifold KE

M21

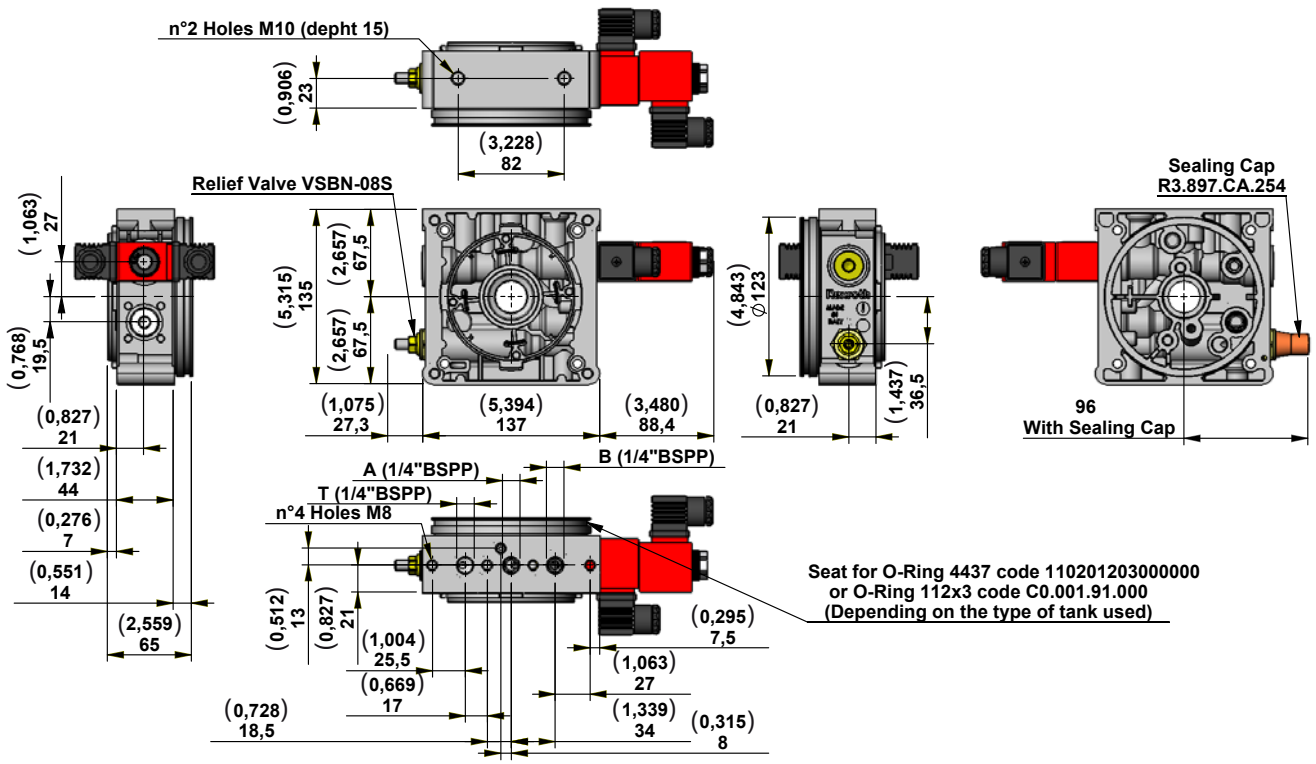

Manifold Code with Relief Valve Pressure Range	Presure Range bar (psi)	Type	Material Number
M21/05	10-55 (145-798)	221A000	R930052217
M21/10	35-100 (508-1450)	221B000	R930052218
M21/20	90-250 (1305-3626)	221C000	R930052219
M21/35	175-345 (2538-5004)	221D000	R930052220

View Manifold Tank side

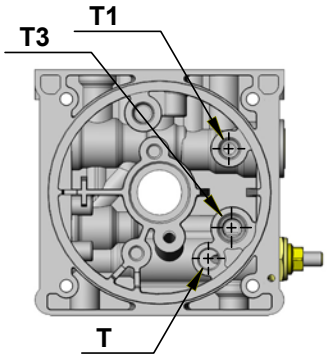

Manifold Hydraulic Diagram

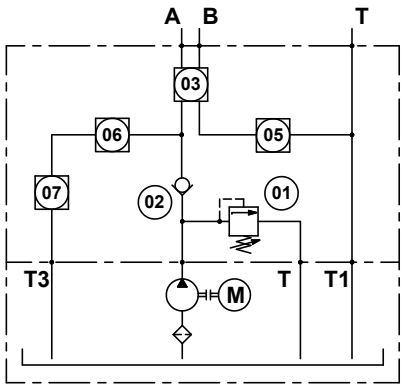

M21 with valves

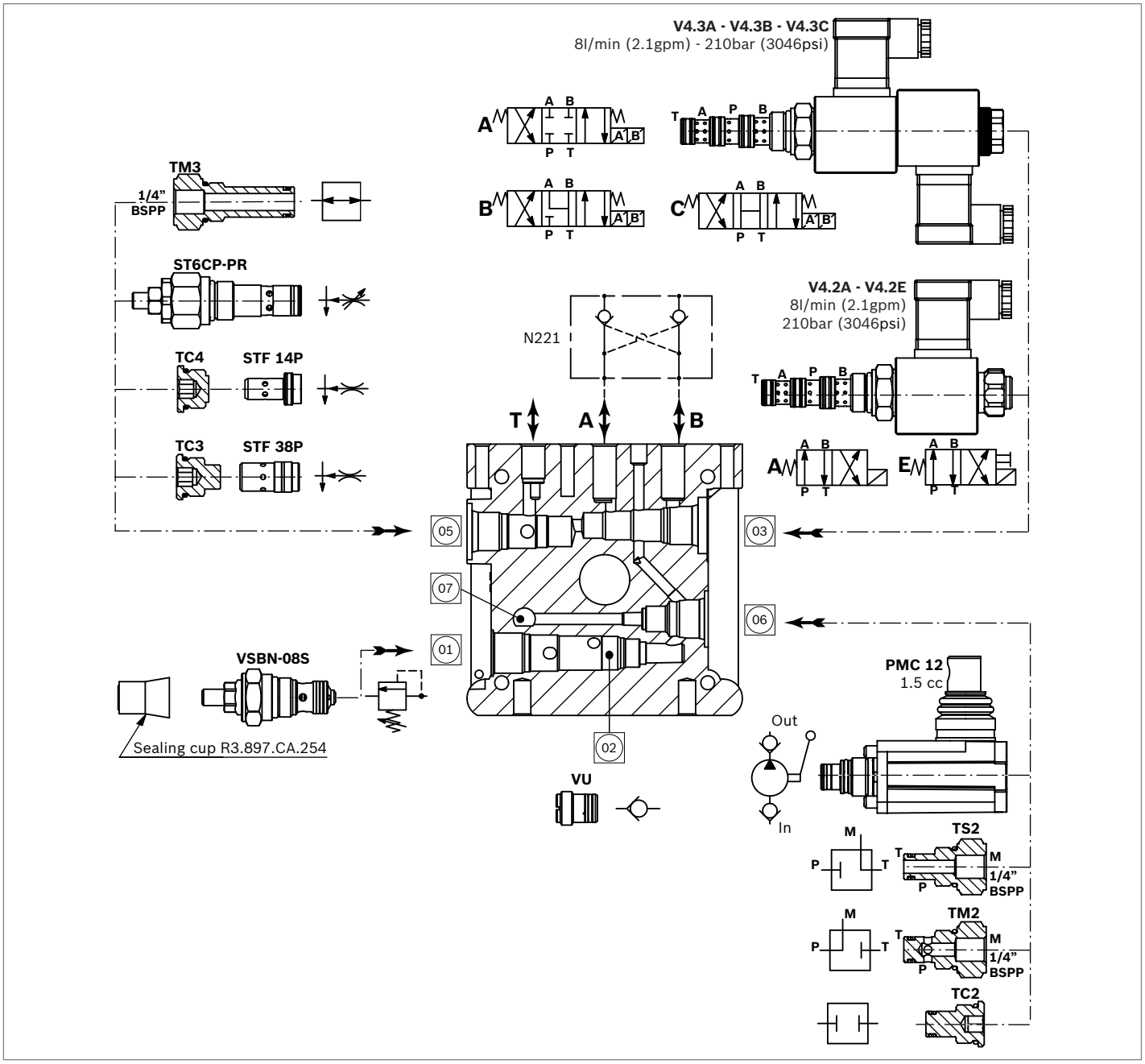

Main Realizable Diagrams

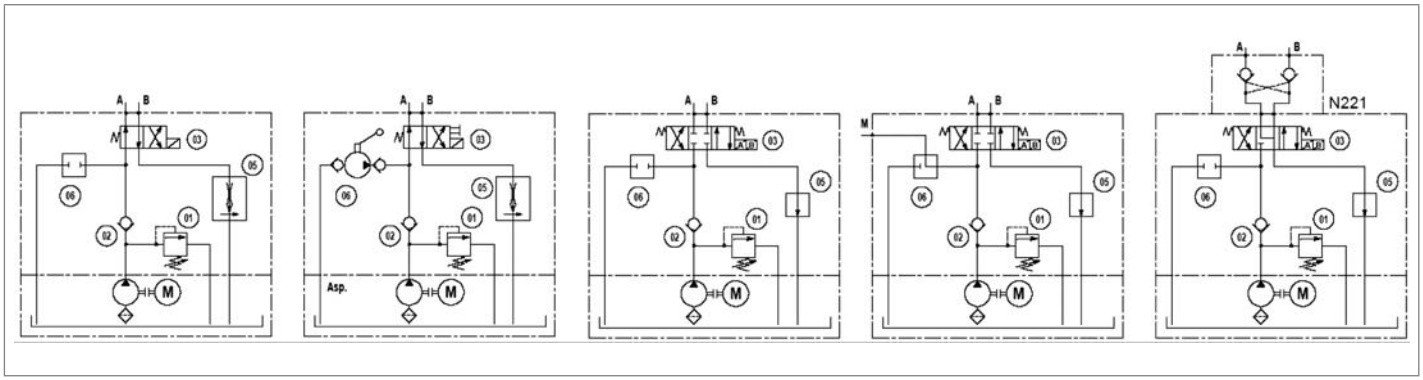

Dimensions [mm (inches)]

Central Manifold KE

M25

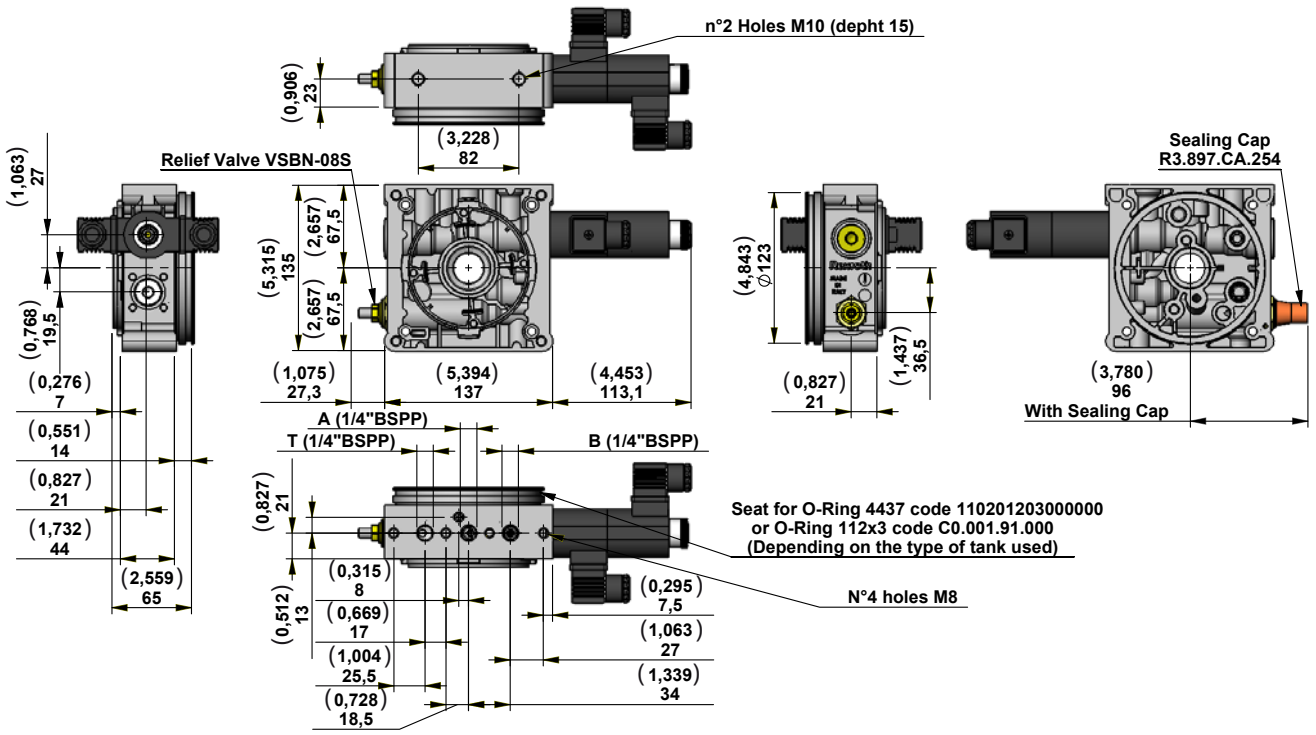

Manifold Code with Relief Valve Pressure Range	Presure Range bar (psi)	Type	Material Number
M25/05	10-55 (145-798)	225A000	R930052221
M25/10	35-100 (508-1450)	225B000	R930052222
M25/20	90-250 (1305-3626)	225C000	R930052223
M25/35	175-345 (2538-5004)	225D000	R930052224

View Manifold Tank side

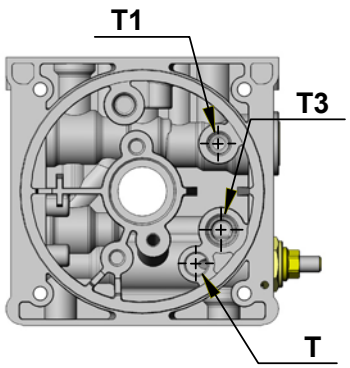

Manifold Hydraulic Diagram

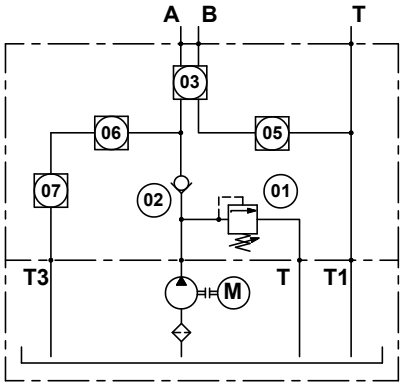

M25 with valves

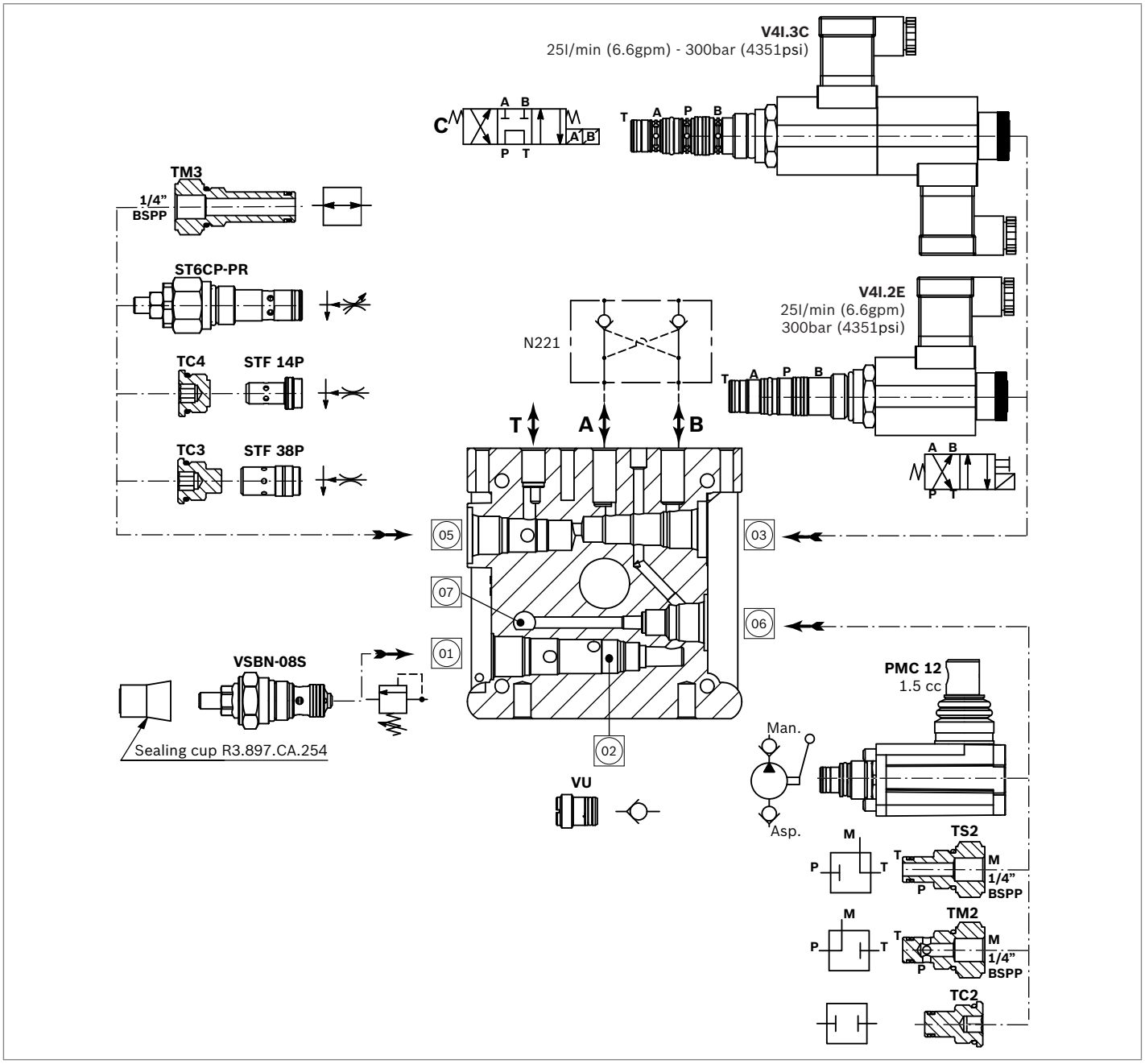

Main Realizable Diagrams

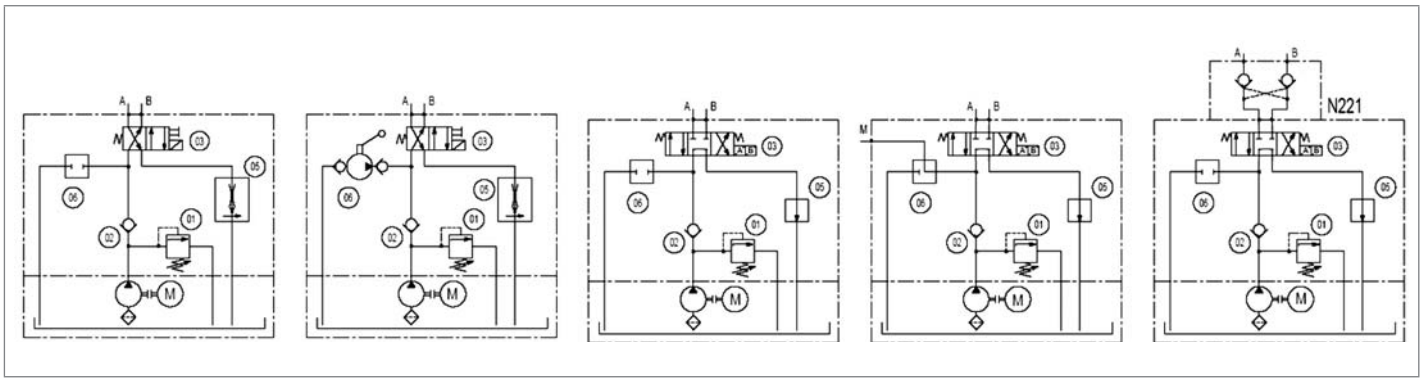

Central Manifold KE

M32

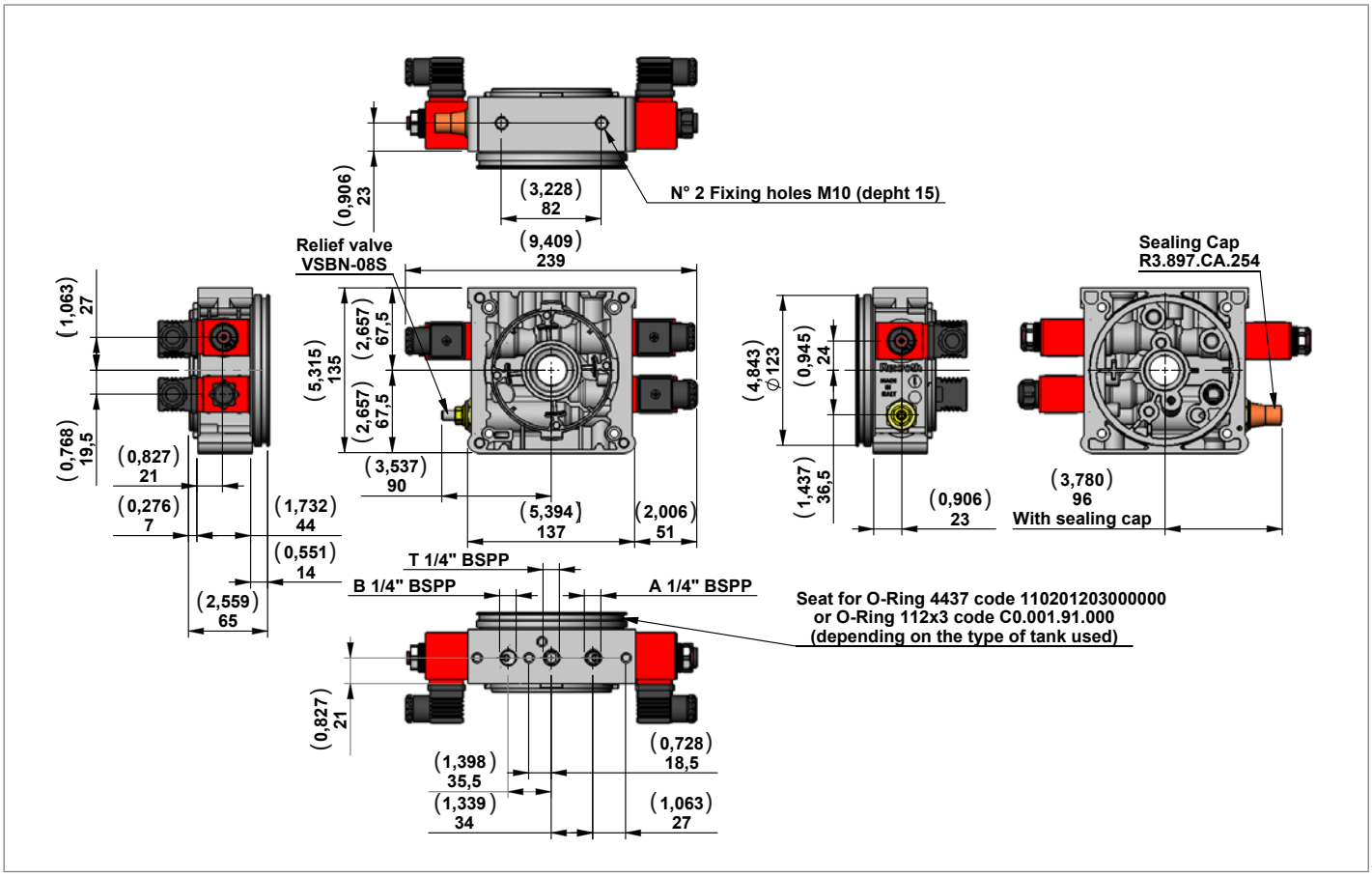

Manifold Code with Relief Valve Pressure Range	Presure Range bar (psi)	Type	Material Number
M32/10	35-100 (508-1450)	232B000	R930052413
M32/20	90-250 (1305-3626)	232C000	R930052414
M32/35	175-345 (2538-5004)	232D000	R930052415

View Manifold Tank side

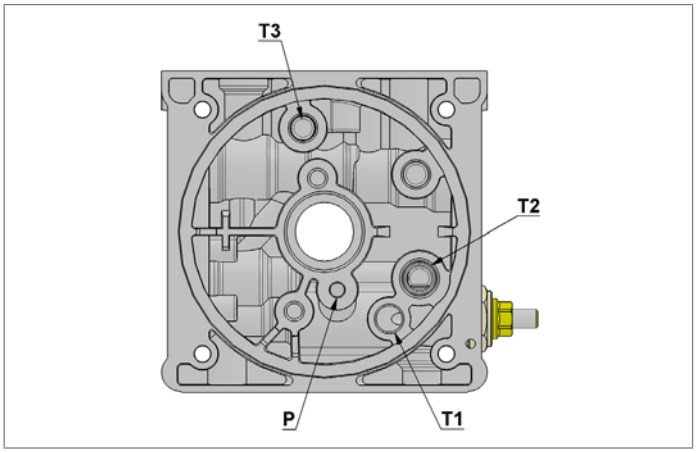

Manifold Hydraulic Diagram

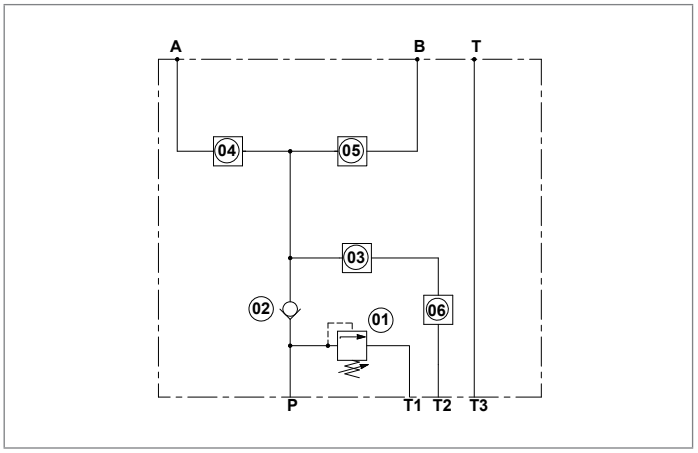

M32 with valves

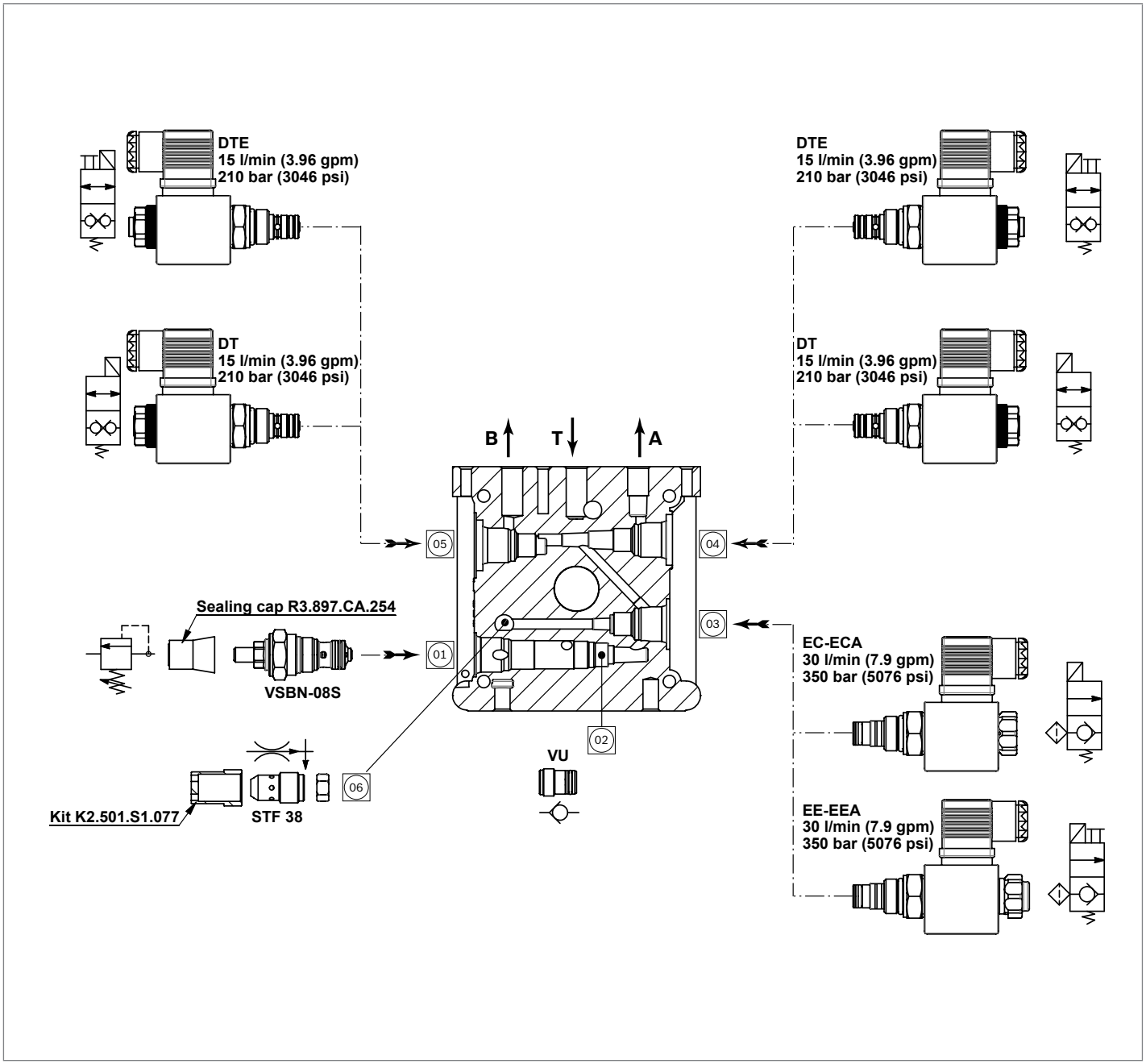

Main Realizable Diagrams

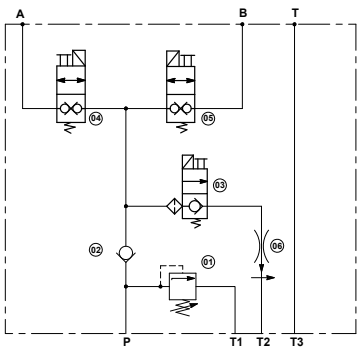

Central Manifold K

A1

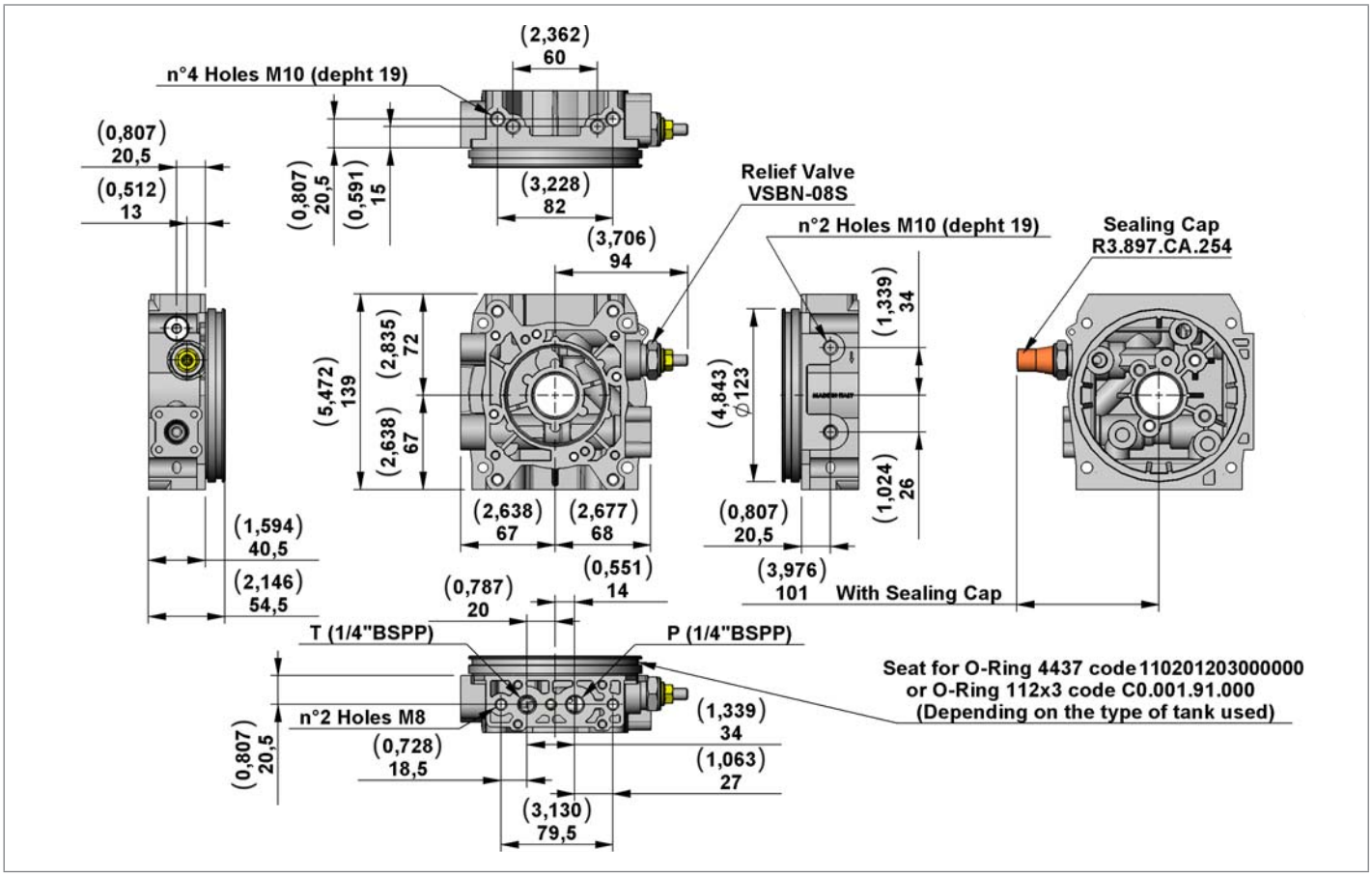

Manifold Code with Relief Valve Pressure Range	Presure Range bar (psi)	Type	Material Number
A1/05	10-55 (145-798)	101A000A	R930052170
A1/10	35-100 (508-1450)	101B000A	R930052171
A1/20	90-250 (1305-3626)	101C000	R932008681
A1/35	175-345 (2538-5004)	101D000	R932008682

View Manifold Tank side

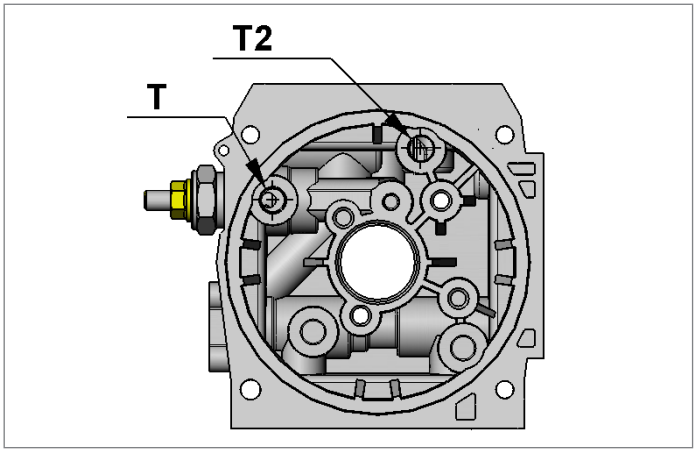

Manifold Hydraulic Diagram

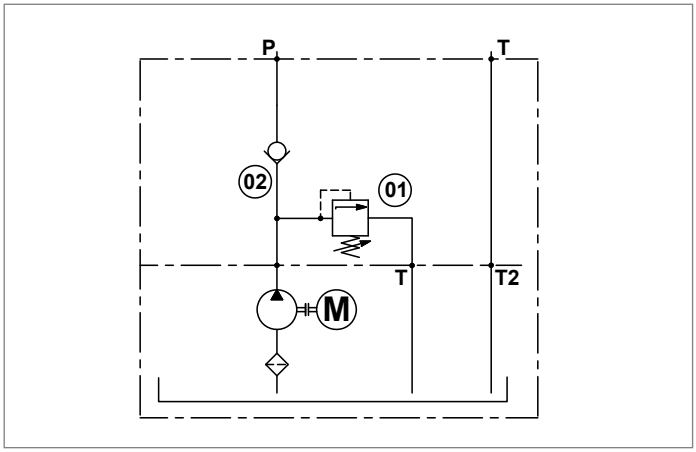

A1 with valves

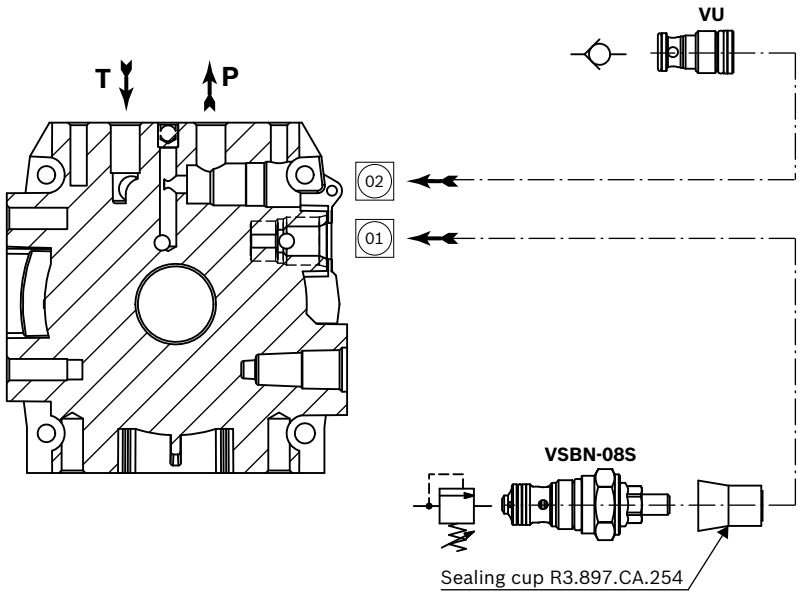

Central Manifold K

A12

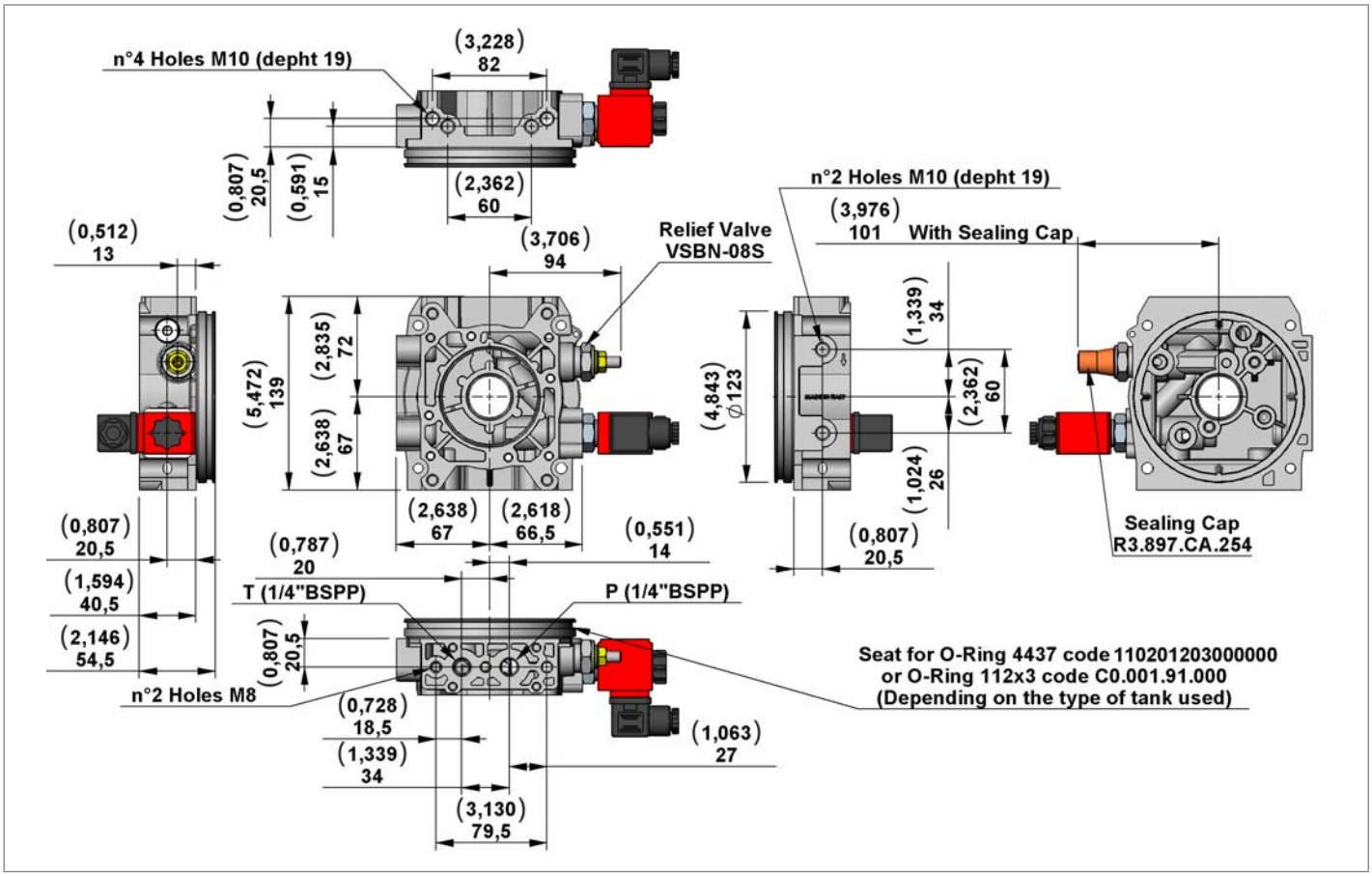

Manifold Code with Relief Valve Pressure Range	Presure Range bar (psi)	Type	Material Number
A12/05	10-55 (145-798)	112A000A	R930052172
A12/10	35-100 (508-1450)	112B000A	R930052173
A12/20	90-250 (1305-3626)	112C000	R932008685
A12/35	175-345 (2538-5004)	112D000	R932008686

View Manifold Tank side

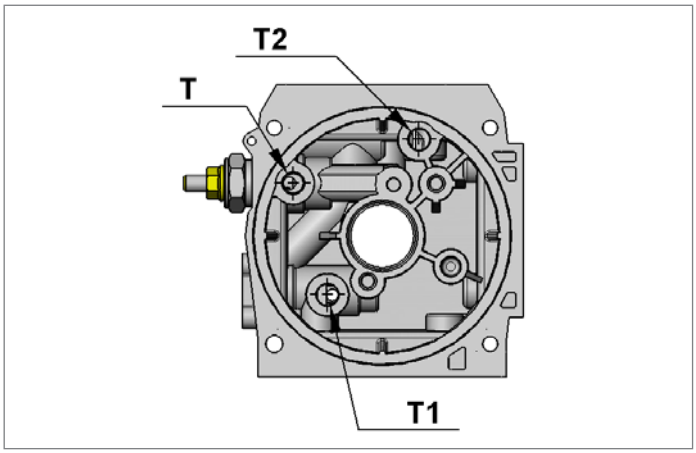

Manifold Hydraulic Diagram

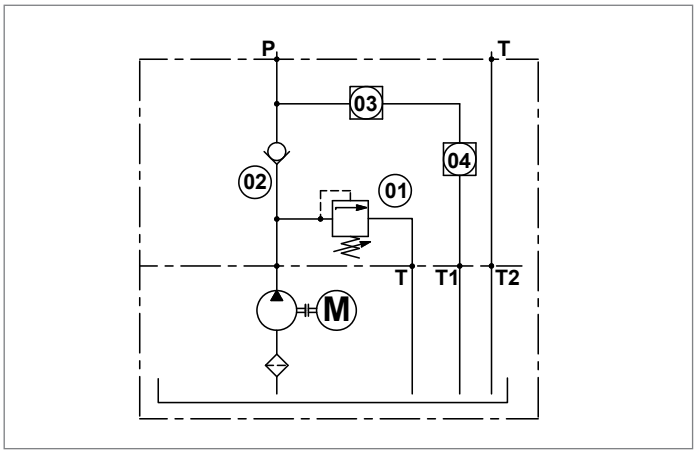

A12 with valves

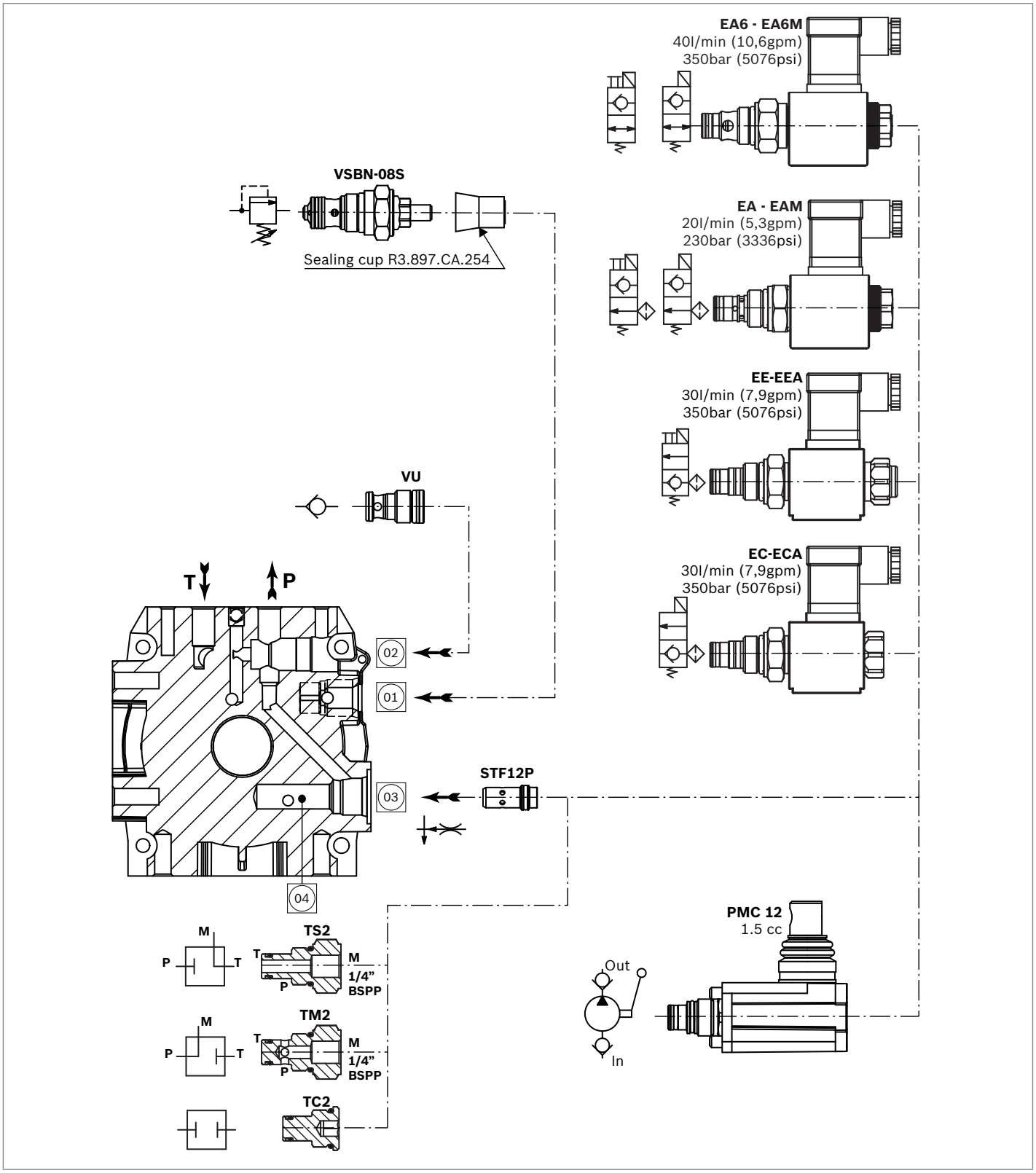

Central Manifold K

A9

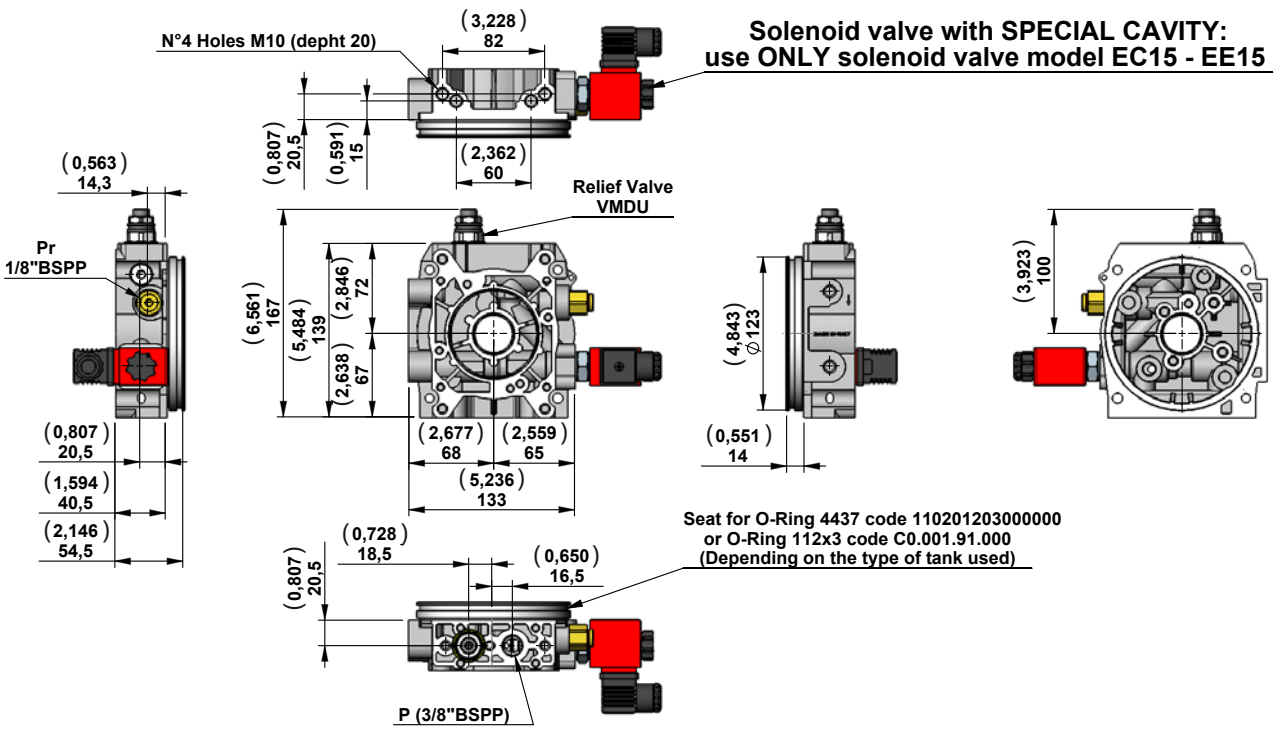

Manifold Code with Relief Valve Pressure Range	Presure Range bar (psi)	Type	Material Number
A9/20	80-250 (1160-3626)	109H000	R932009128

View Manifold Tank side

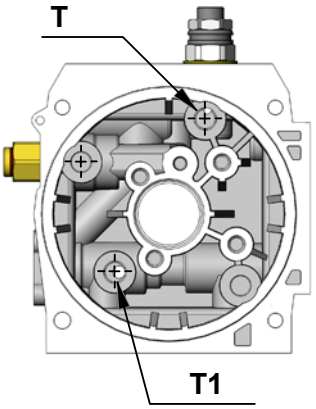

Manifold Hydraulic Diagram

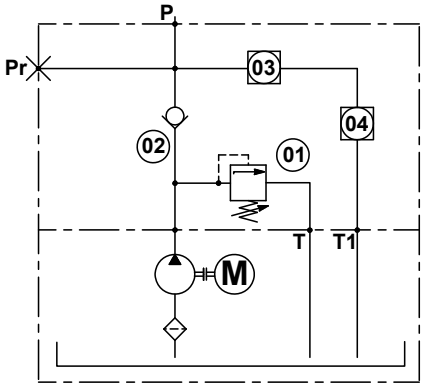

A9 with valves

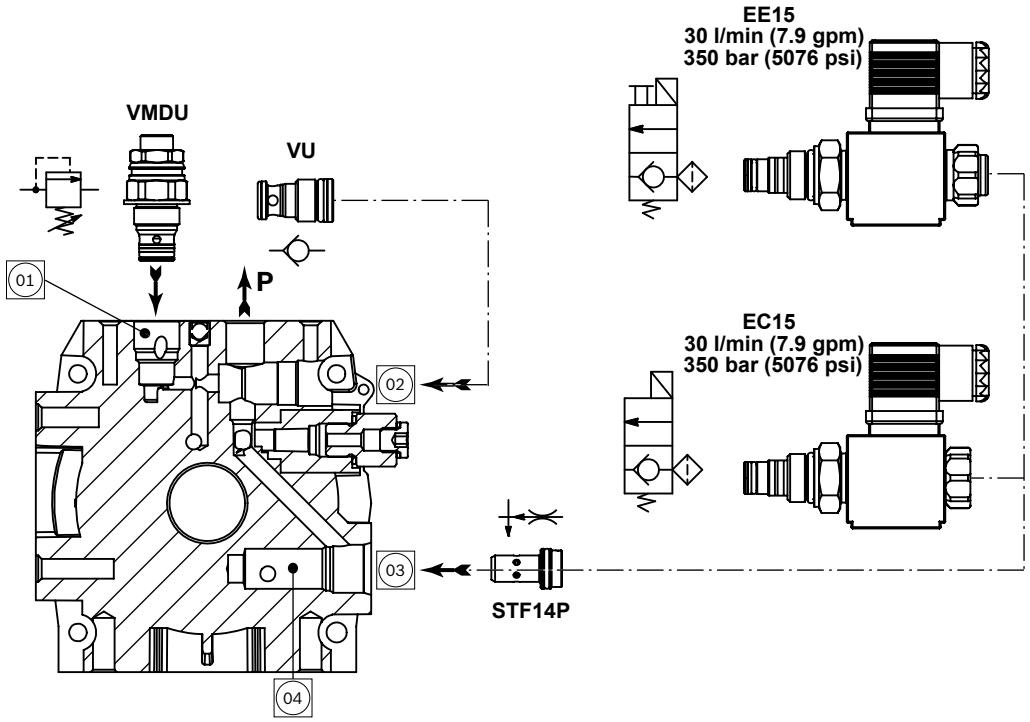

Central Manifold KS

KS00

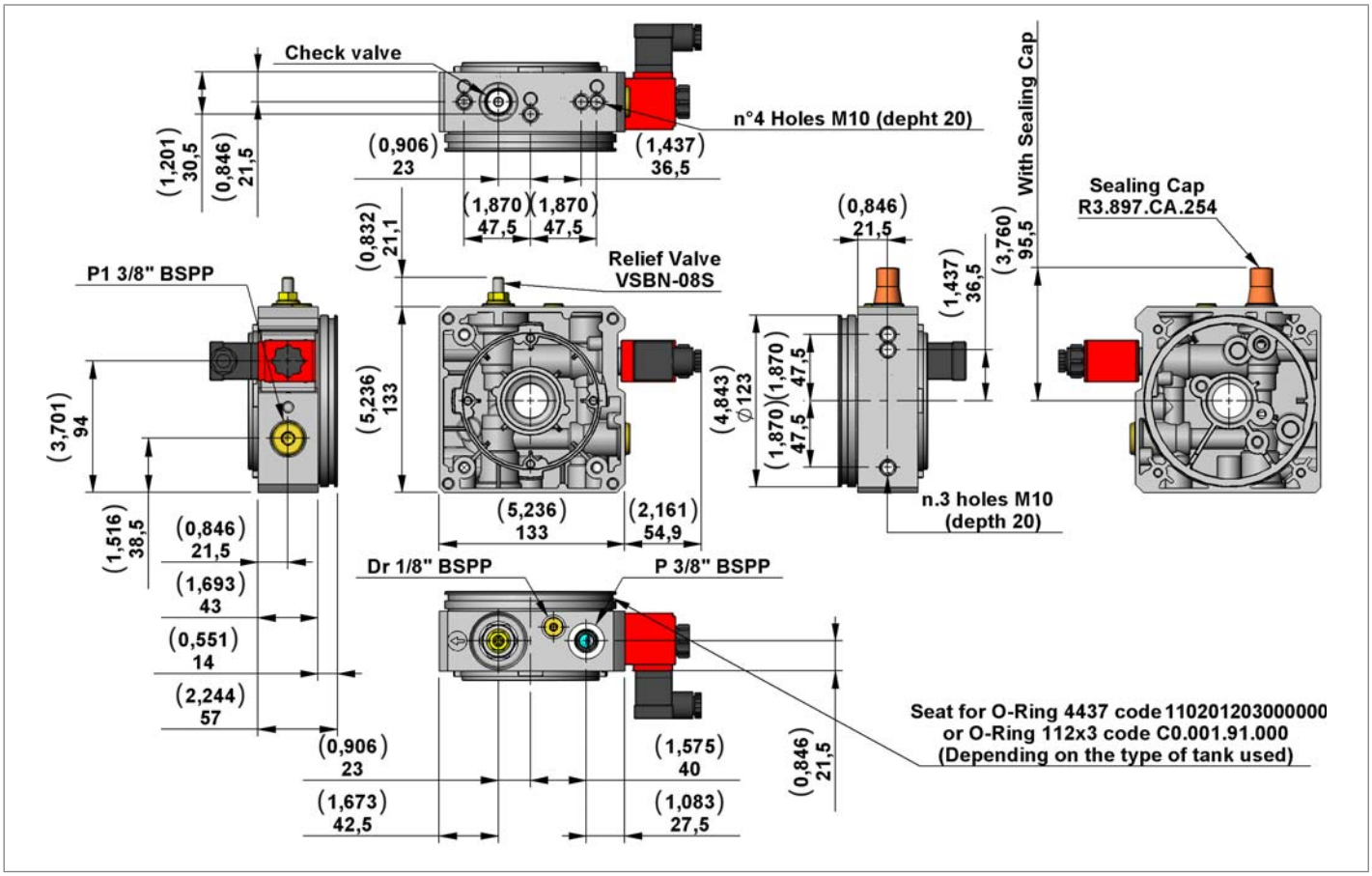

Manifold Code with Relief Valve Pressure Range	Presure Range bar (psi)	Type	Material Number
KS00/10	35-100 (508-1450)	300B000	R930052312
KS00/20	90-250 (1305-3626)	300C000	R932010081
KS00/35	175-345 (2538-5004)	300D000	R930052302

View Manifold Tank side

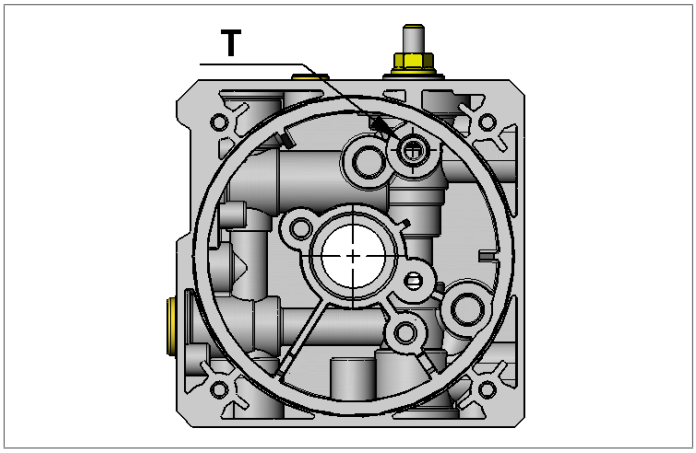

Manifold Hydraulic Diagram

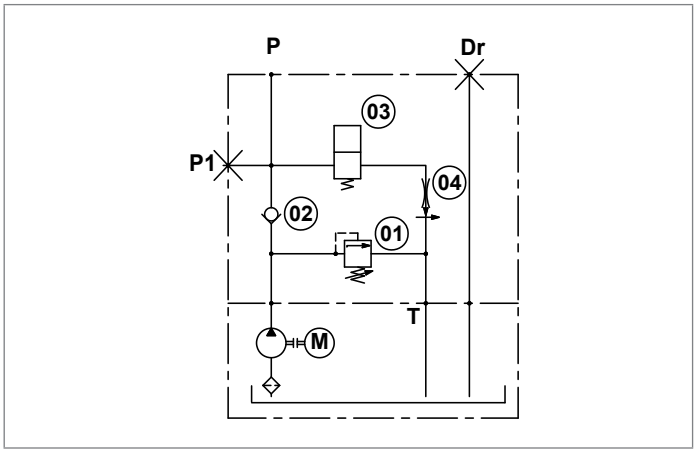

KS00 with valves

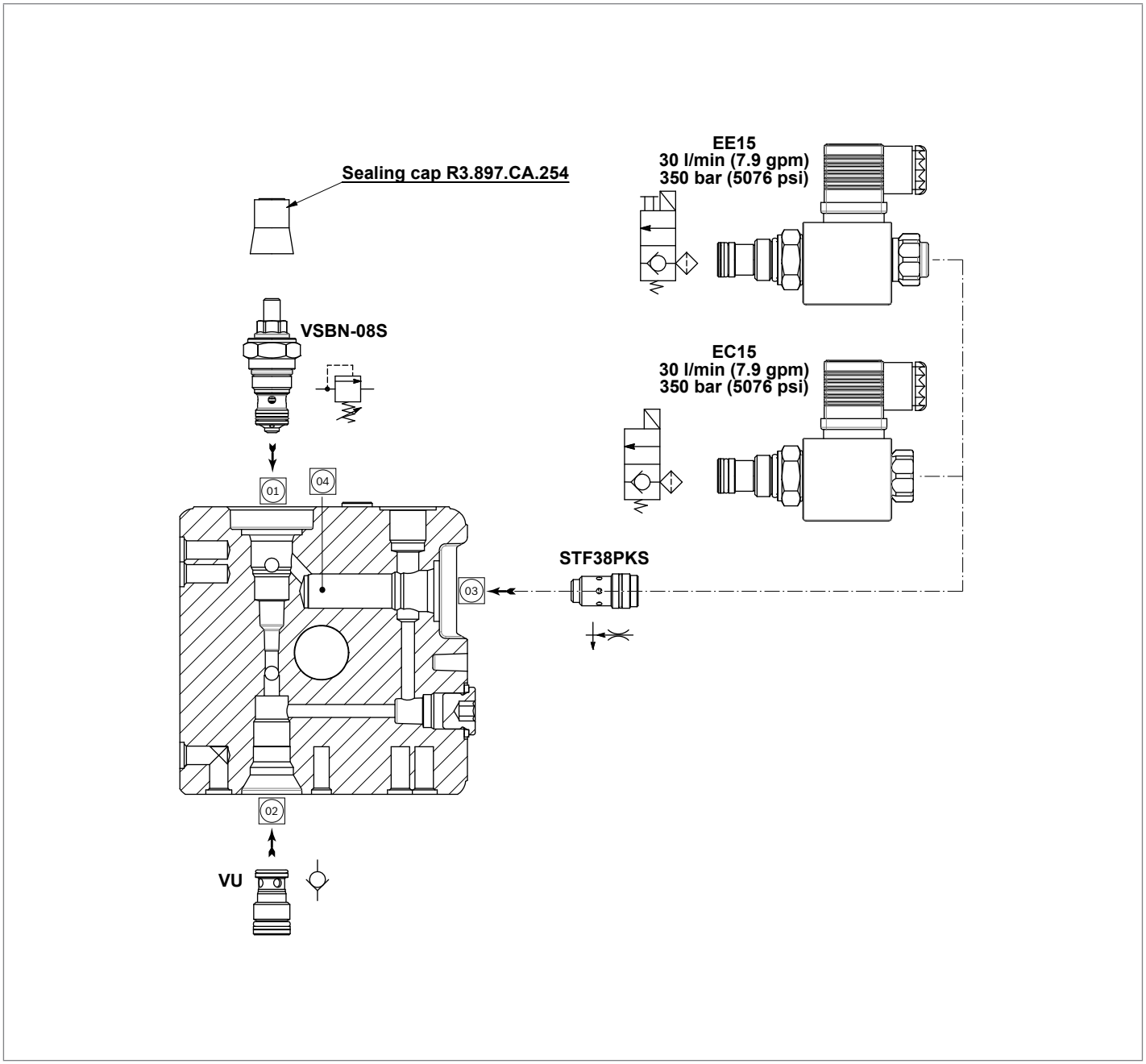

Note
Steel tank is not available for central manifold KS type. Please contact our sales department for further information.

Central Manifold KS

KS02

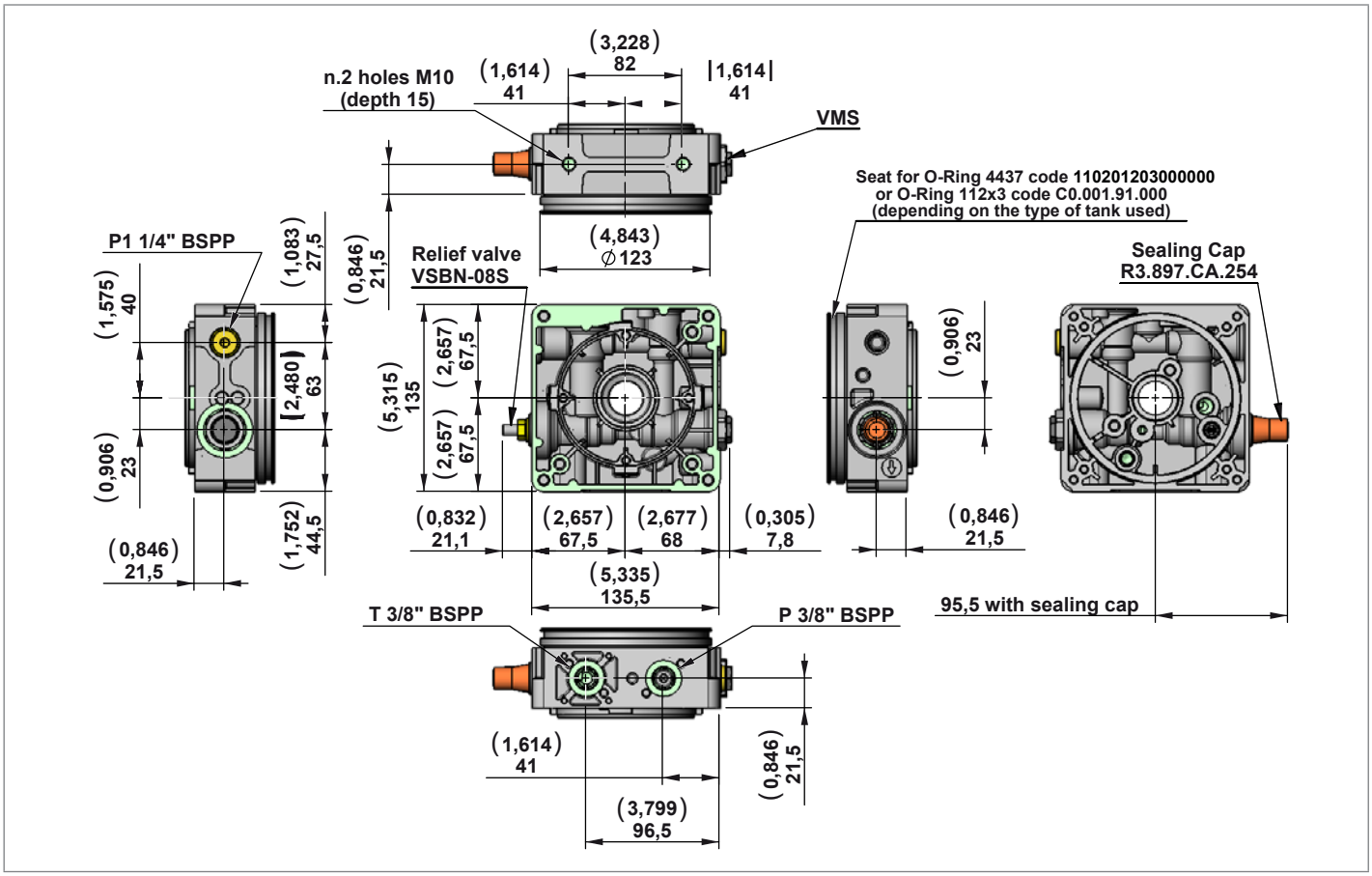

Manifold Code with Relief Valve Pressure Range	Presure Range bar (psi)	Type	Material Number
KS02/10	35-100 (508-1450)	302B000	R932010304
KS02/20	90-250 (1305-3626)	302C000	R932008762
KS02/35	175-345 (2538-5004)	302D000	R932008763

Note
Steel tank is not available for central manifold KS type. Please contact our sales department for further information.

View Manifold Tank side

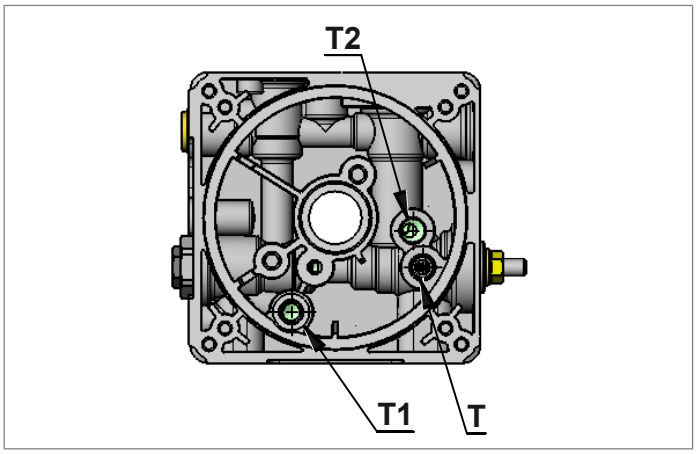

Manifold Hydraulic Diagram

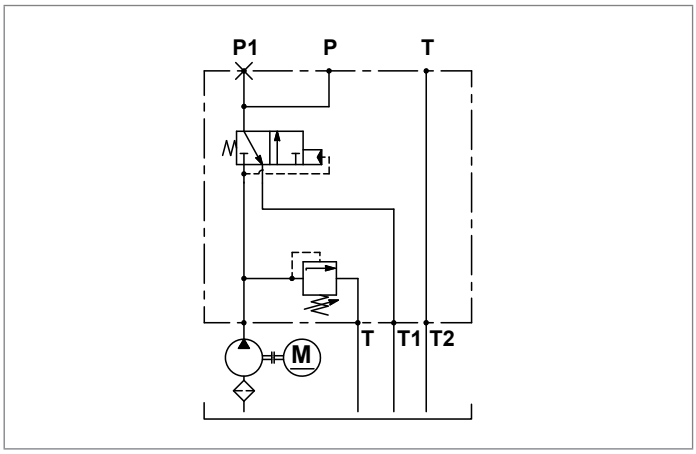

Built-in Valve

VE3-NC Series

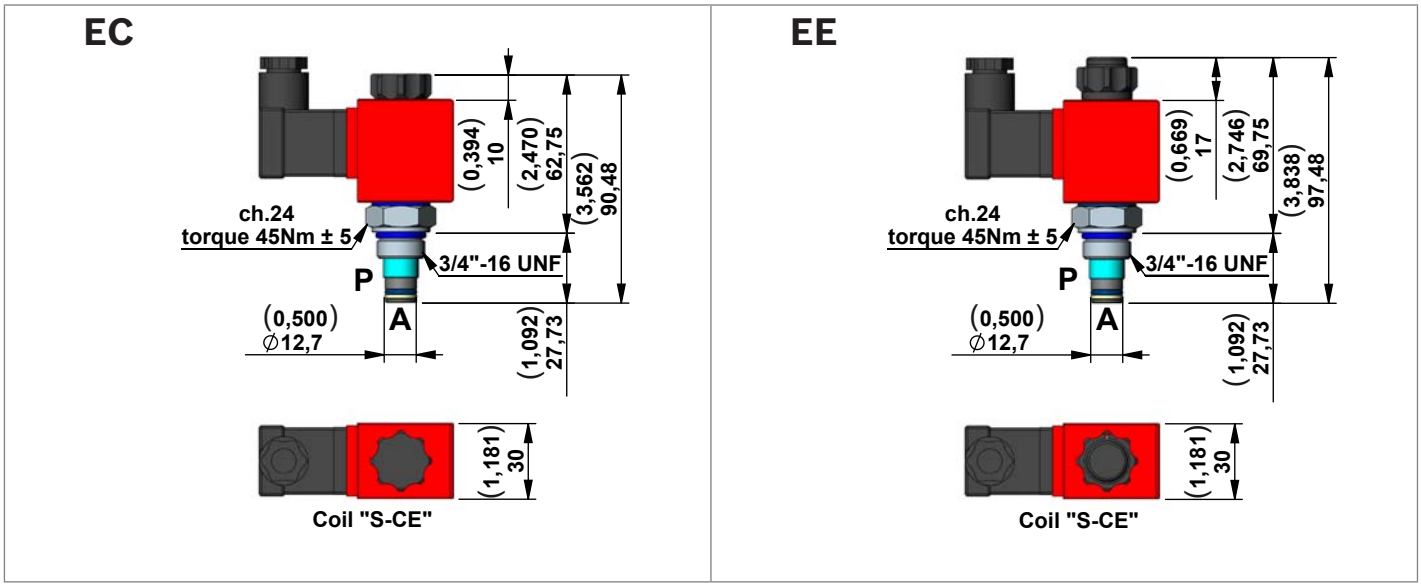

2 Way Pilot Operated Solenoid Valves, Normally Closed for D.C. current

Code	Type	Material Number
EC	K01V389671A20	R932009180
EE	K01V389671E20	R932009181

Description

This is a standard 2 way pilot operated valves poppet style.

- **Only for D.C. current.**
- Internal leakage: see technical data.
- Minimum operating voltage: 90% of nominal.
- Screen on P 300 Micron.
- Screw Type Emergency on EE.

Valve symbol

Code	Symbol	Operating features with solenoid	
		De-energized	Energized
EC	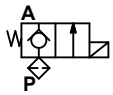	P ◇ A	P <-> A
EE	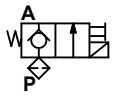	P ◇ A	P <-> A

Technical Data

General		
Operating time	ms	Opening 30-40
		Closing 60-85
Max. working pressure	bar (psi)	350 (5076)
Max. flow	l/min (gpm)	30 (7,92)

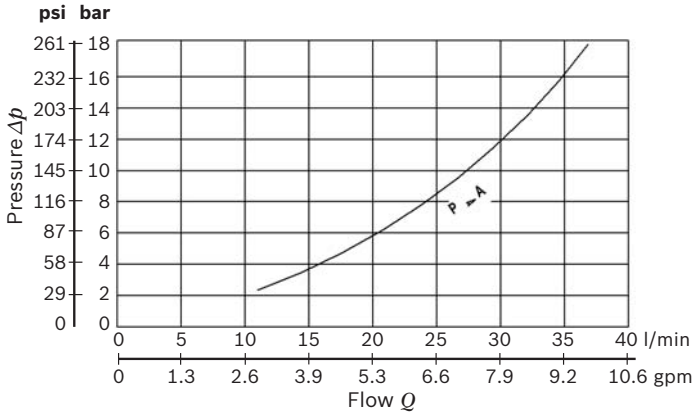

S-CE Coil Voltage Available

Voltage
12 Volts D.C.
24 Volts D.C.
48 Volts D.C.
24 Volts RAC
48 Volts RAC
110 Volts RAC
220 Volts RAC

Dimensions [mm (inches)]

VE3-NC Series (Special cavity for manifold KS00 and A9)

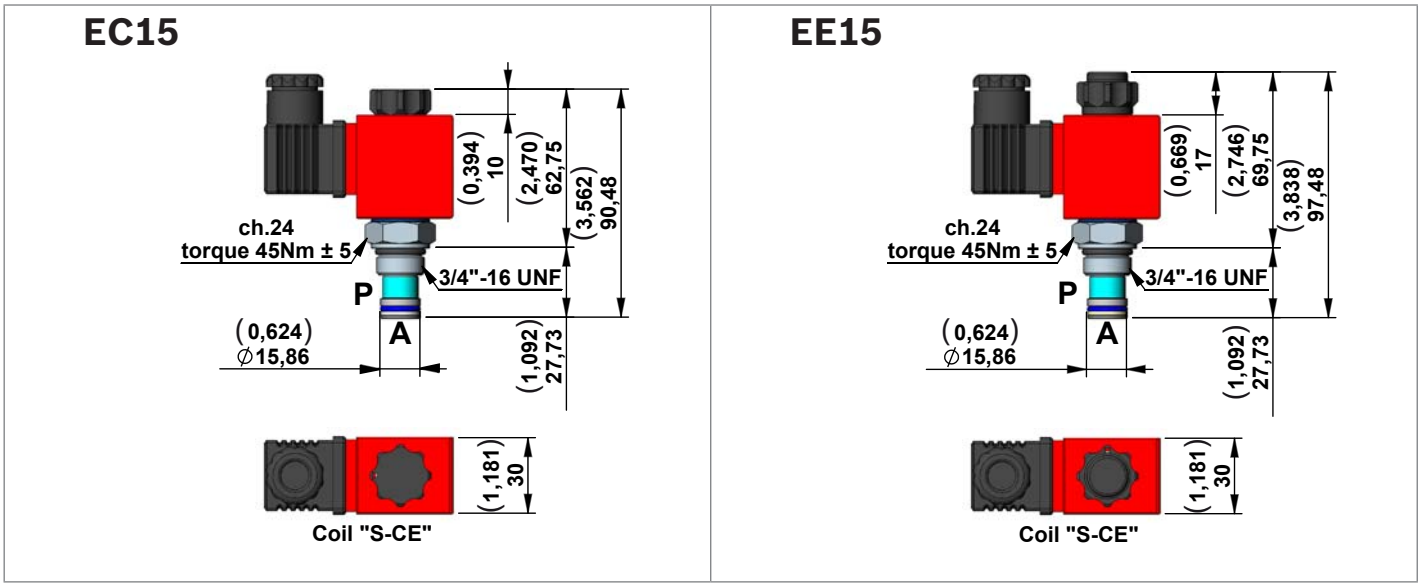

2 Way Pilot Operated Solenoid Valves, Normally Closed for D.C. current

Code	Type	Material Number
EC15	K01V389671A10	R930052292
EE15	K01V389671E10	R930052293

Description

This is a standard 2 way pilot operated valves poppet style.

- **Only for manifolds KS00 and A9 .**
- **Only for D.C. current.**
- Internal leakage: see technical data.
- Minimum operating voltage: 90% of nominal.
- Screen on P 300 Micron.
- Screw Type Emergency on EE.

Valve symbol

Code	Symbol	Operating features with solenoid	
		De-energized	Energized
EC15	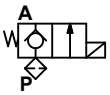	P ⌬ A	P -> A
EE15	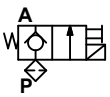	P ⌬ A	P -> A

Technical Data

General		
Operating time	ms	Opening 30-40
		Closing 60-85
Max. working pressure	bar (psi)	350 (5076)
Max. flow	l/min (gpm)	30 (7,92)

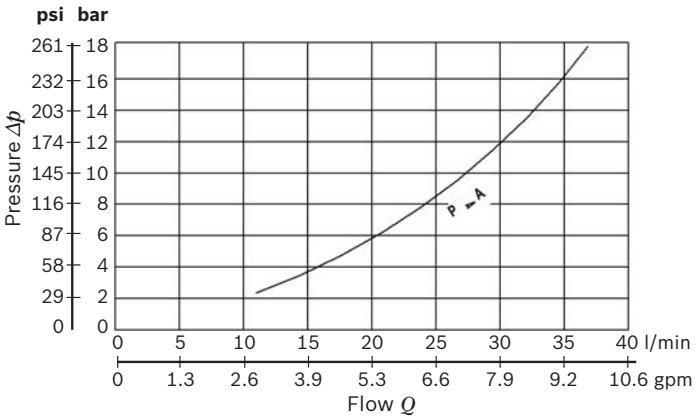

S-CE Coil Voltage Available

Voltage
12 Volts D.C.
24 Volts D.C.
48 Volts D.C.
24 Volts RAC
48 Volts RAC
110 Volts RAC
220 Volts RAC

VE1-NC Series

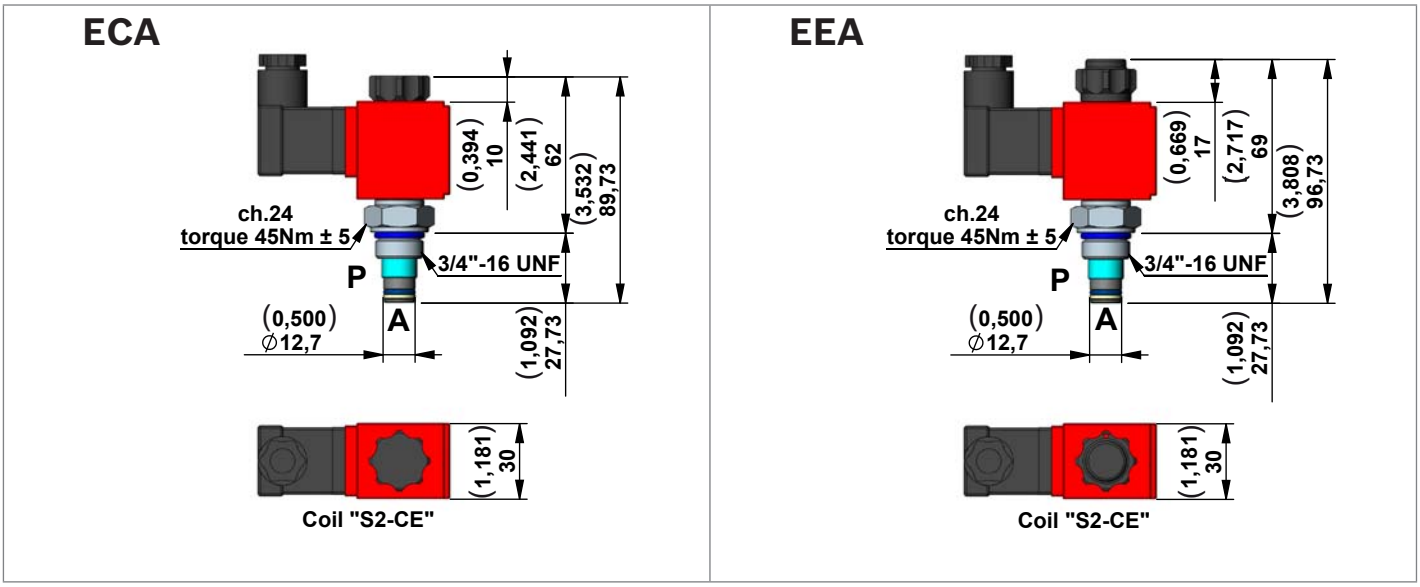

2 Way Pilot Operated Solenoid Valves, Normally Closed for A.C. current

Code	Type	Material Number
ECA	K01V389669A20	R932009182
EEA	K01V389669E20	R932009183

Description

This is a standard 2 way pilot operated valves poppet style.

- **Only for A.C. current.**
- Internal leakage: see technical data.
- Minimum operating voltage: 90% of nominal.
- Screen on P 300 Micron.
- Screw Type Emergency on EEA.

Valve symbol

Code	Symbol	Operating features with solenoid	
		De-energized	Energized
ECA	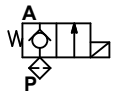	P ⬡ A	P -> A
EEA	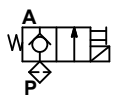	P ⬡ A	P -> A

Technical Data

General		
Operating time	ms	Opening 30-40
		Closing 60-85
Max. working pressure	bar (psi)	350 (5076)
Max. flow	l/min (gpm)	30 (7,92)

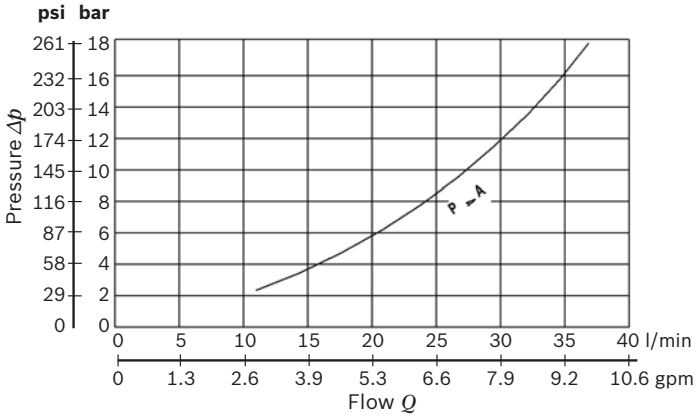

S2-CE Coil Voltage Available

Voltage
24 Volts 50 Hz A.C.
220 Volts 50 Hz A.C.
24 Volts 60 Hz A.C.
220 Volts 60 Hz A.C.
24 Volts 50-60 Hz A.C.

VE3-NA Series

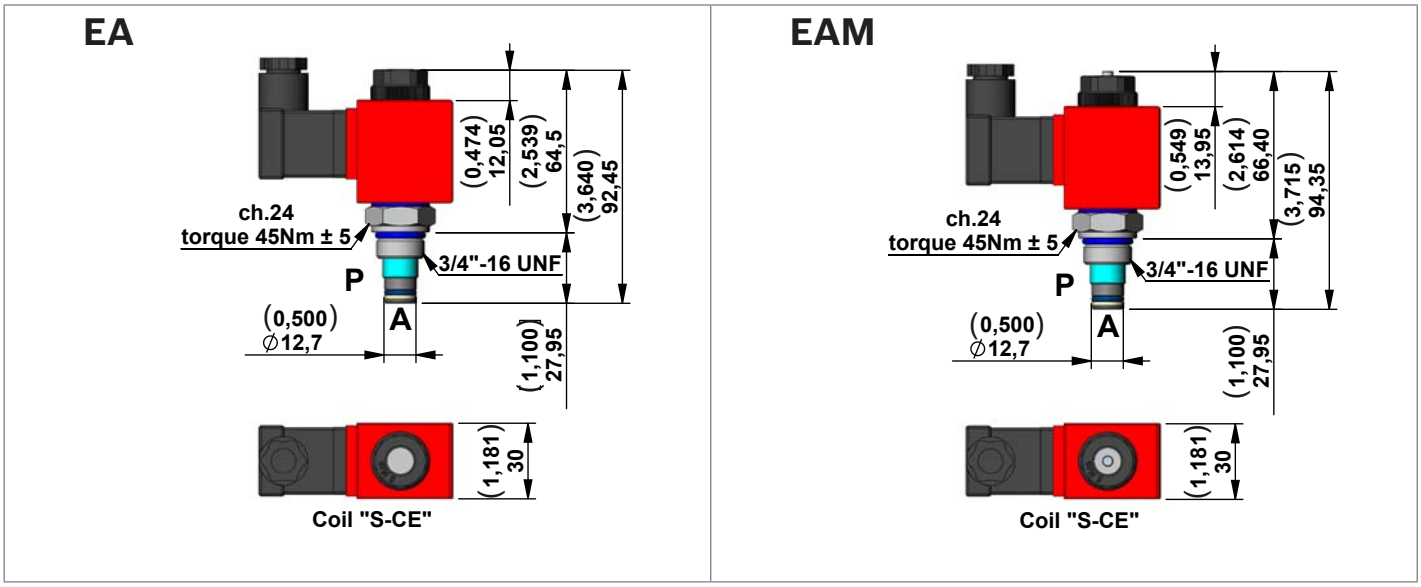

2 Way Pilot Operated Solenoid Valves, Normally Open

Code	Type	Material Number
EA	K01V389674A20	R932009184
EAM	K01V389674E20	R932009185

Description

This is a standard 2 way pilot operated valves poppet style.

- **Only for D.C. current.**
- Internal leakage: see technical data.
- Minimum operating voltage: 90% of nominal.
- Screen on P 300 Micron.
- Push Type Emergency on EAM.

Valve symbol

Code	Symbol	Operating features with solenoid	
		De-energized	Energized
EA	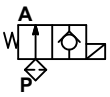	P -> A	P ○ A
EAM	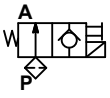	P -> A	P ○ A

Technical Data

General		
Max. working pressure	bar (psi)	230 (3336)
Max. flow	l/min (gpm)	20 (5,28)

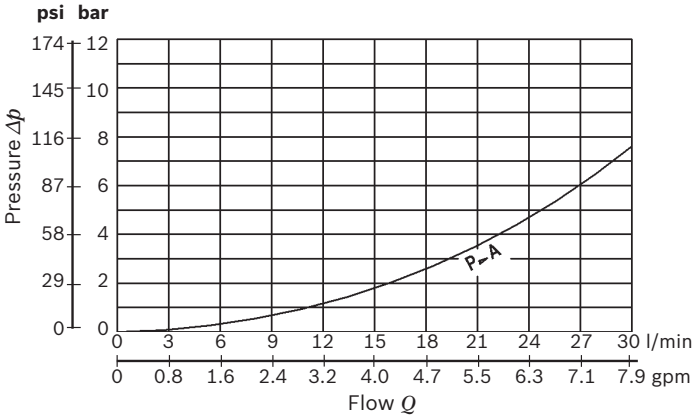

S-CE Coil Voltage Available

Voltage
12 Volts D.C.
24 Volts D.C.
48 Volts D.C.
24 Volts RAC
48 Volts RAC
110 Volts RAC
220 Volts RAC

CEI6-NA Series

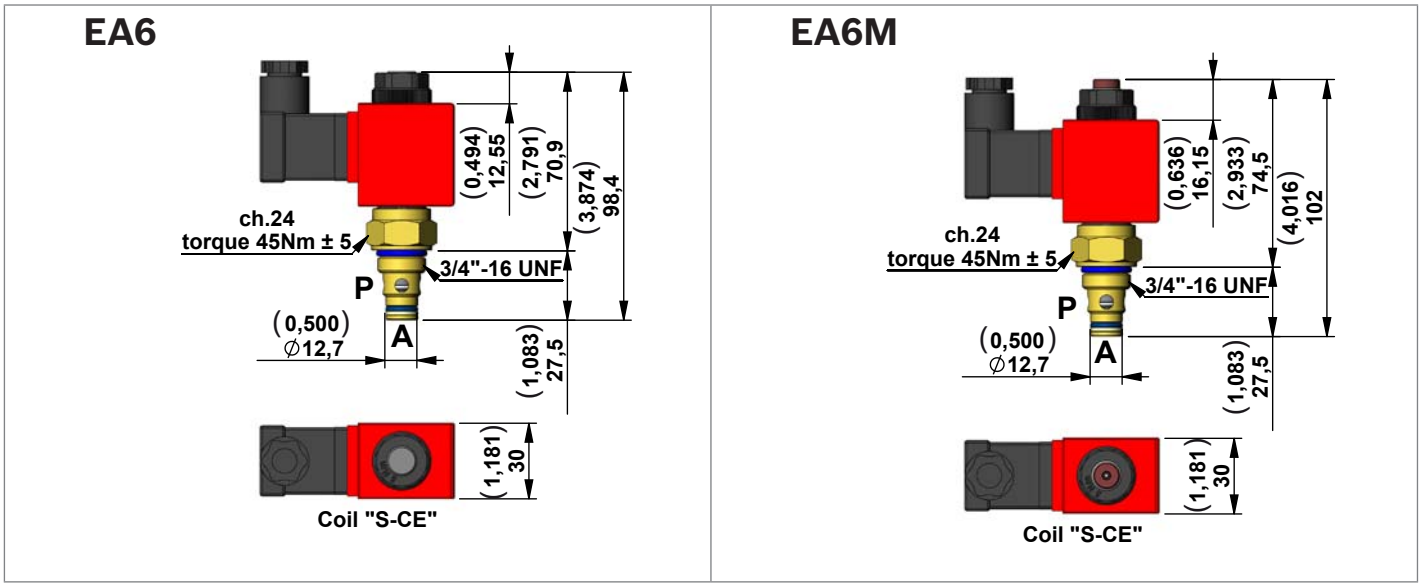

2 Way Pilot Operated Solenoid Valves, Normally Open

Code	Type	Material Number
EA6	K01V389664B20	R932009186
EA6M	K01V389664M20	R932009187

Description

This is a standard 2 way pilot operated valves poppet style.

- **Only for D.C. current.**
- Internal leakage: see technical data.
- Minimum operating voltage: 90% of nominal.
- Push Type Emergency on EA6M.

Valve symbol

Code	Symbol	Operating features with solenoid	
		De-energized	Energized
EA6	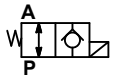	P → A	P ⬡ A
EA6M	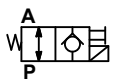	P → A	P ⬡ A

Technical Data

General		
Max. working pressure	bar (psi)	350 (5076)
Max. flow	l/min (gpm)	40 (10,57)

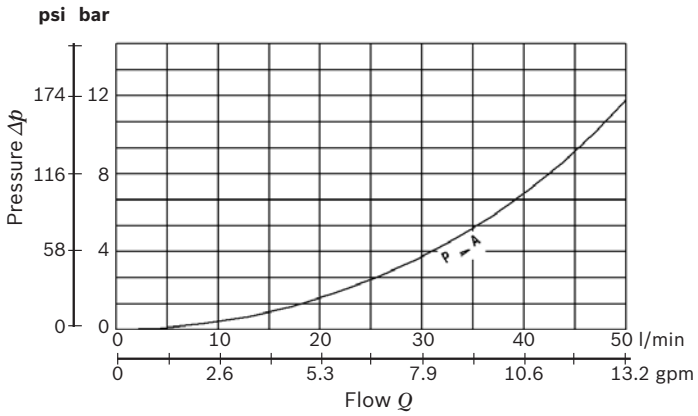

S-CE Coil Voltage Available

Voltage
12 Volts D.C.
24 Volts D.C.
48 Volts D.C.
24 Volts RAC
48 Volts RAC
110 Volts RAC
220 Volts RAC

Dimensions [mm (inches)]

CE3-DT Series (for manifold M32)

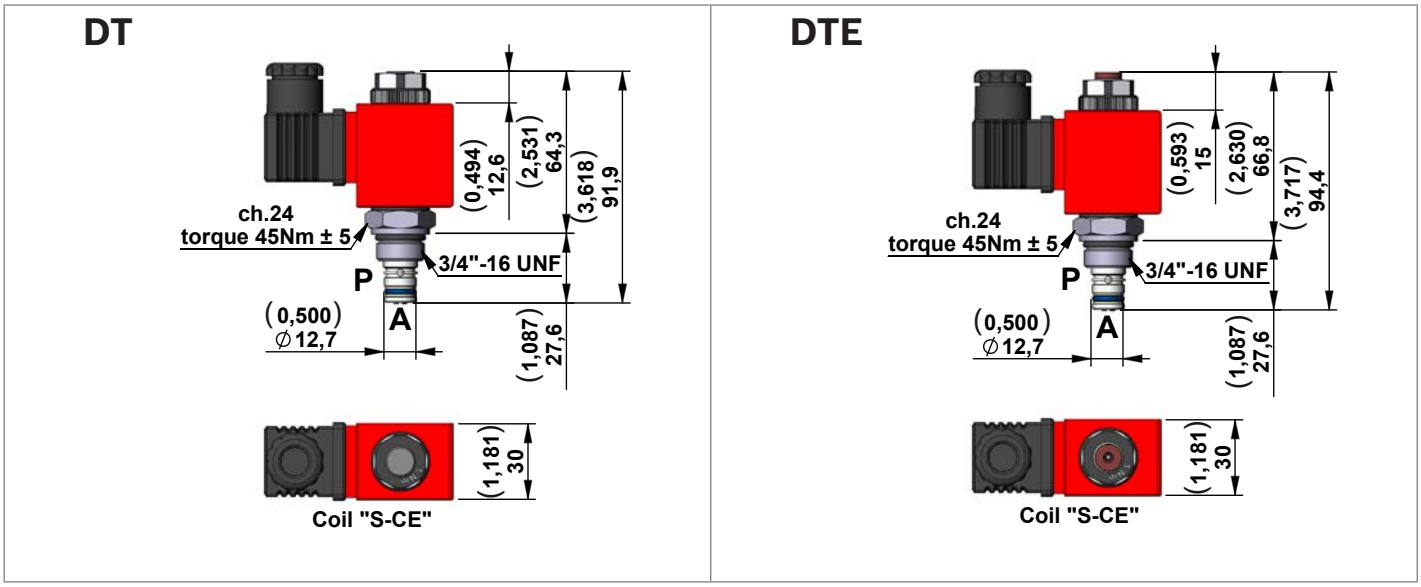

2 Way direct acting double lock Solenoid Valves, Normally Closed for D.C. current

Code	Type	Material Number
DT	K01V389622A20	R930053009
DTE	K01V389622E20	R930053010

Description

On this valve the oil can pass free or can be perfectly locked on each ports “P” and “A”.

- **Only for D.C. current.**
- Internal leakage: see technical data.
- Minimum operating voltage: 90% of nominal.
- Push Type Emergency on DTE push..

Valve symbol

Code	Symbol	Operating features with solenoid	
		De-energized	Energized
DT	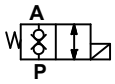	P ⬡ A A ⬡ P	P → A A → P
DTE	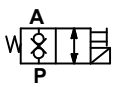	P ⬡ A A ⬡ P	P → A A → P

Technical Data

General		
Operating time	ms	Opening 15-20
		Closing 20-45
Max. working pressure	bar (psi)	210 *(3046)*
Max. flow	l/min (gpm)	15 *(3,96)*

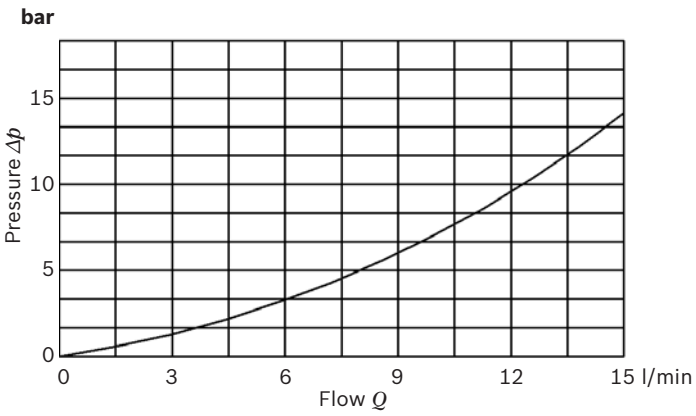

S-CE Coil Voltage Available

Voltage
12 Volts D.C.
24 Volts D.C.
48 Volts D.C.
24 Volts RAC
48 Volts RAC
110 Volts RAC
220 Volts RAC

V3D-DT Series

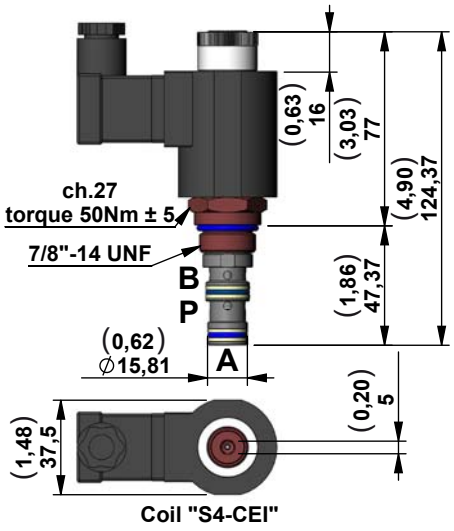

3 Way Direct Acting Poppet Style Solenoid Valves

Code	Type	Material Number
V3DT	K01V389643A00	R932009299

Description

3 Way Direct Acting Poppet Style Solenoid Valves
- **Only for D.C. current.**
- Internal leakage: see technical data.
- Minimum operating voltage: 90% of nominal.
- Push Type Emergency.

Valve symbol

Code	Symbol	Operating features with solenoid	
		De-energized	Energized
V3DT	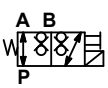	P ↔ A B ◇◇	P ↔ B A ◇◇

Technical Data

General		
Max. working pressure	bar (psi)	250 (3626)
Max. flow	l/min (gpm)	20 (5,28)

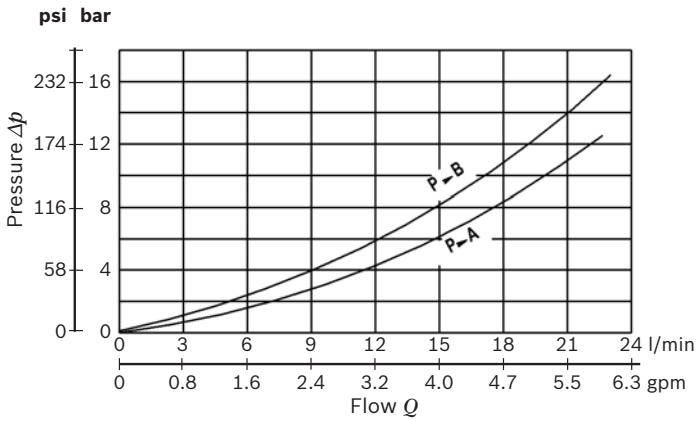

S4-CEI Coil Voltage Available

Voltage
12 Volts D.C.
24 Volts D.C.
24 Volts RAC
110 Volts RAC
220 Volts RAC

Dimensions [mm (inches)]

V4DS-2P Series

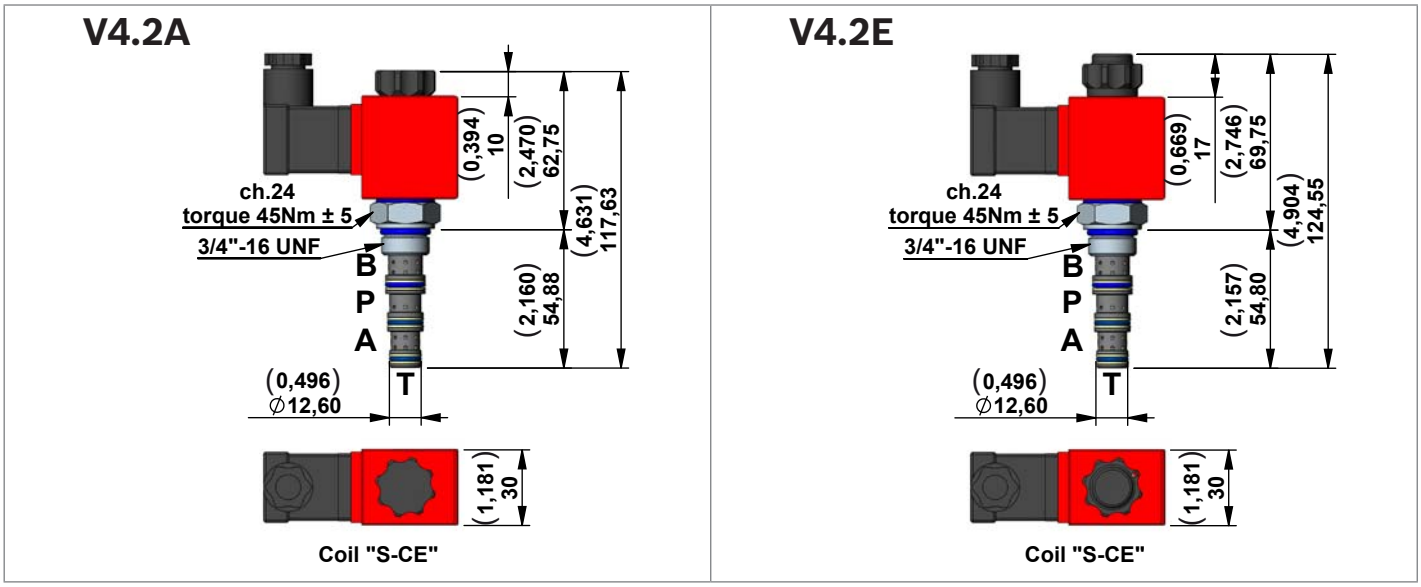

4 Way 2 Position Solenoid Valves Spool Type

Code	Type	Material Number
V4.2A	K01V389656A00	R932009300
V4.2E	K01V389656E00	R932009301

Technical Data

General		
Max. working pressure	bar (psi)	210 (3046)
Max. flow	l/min (gpm)	8 (2,11)

Description

4 Way 2 Position Solenoid Valves Spool Type

- **Only for D.C. current.**
- Minimum operating voltage: 90% of nominal.
- Screw Type Emergency on V4.2E.

Valve symbol

Code	Symbol	Operating features with solenoid	
		De-energized	Energized
V4.2A		P <-> A B <-> T	P <-> B A <-> T
V4.2E		P <-> A B <-> T	P <-> B A <-> T

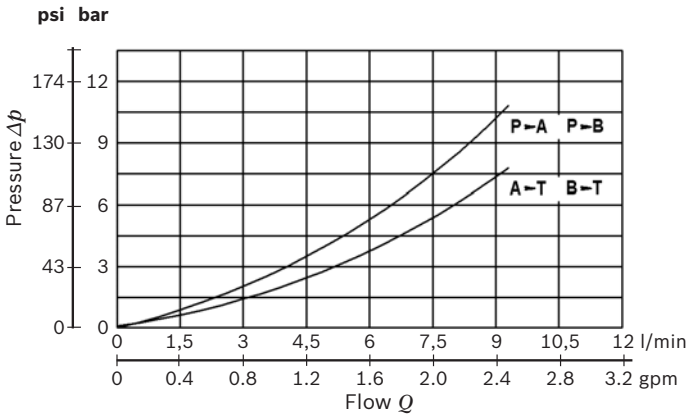

S-CE Coil Voltage Available

Voltage
12 Volts D.C.
24 Volts D.C.
48 Volts D.C.
24 Volts RAC
48 Volts RAC
110 Volts RAC
220 Volts RAC

V4D-CEI-2P Series

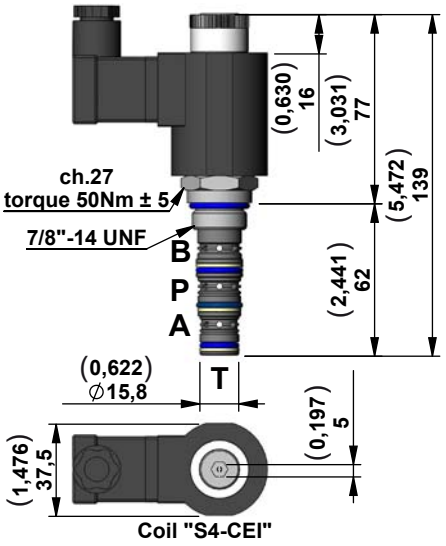

4 Way 2 Position Solenoid Valves Spool Type

Code	Type	Material Number
V4I.2E	K01V389631A10	R932009302

Description

4 Way 2 Position Solenoid Valves, Spool Type

- **Only for D.C. current.**
- Minimum operating voltage: 90% of nominal.
- Push Type Emergency.

Valve symbol

Code	Symbol	Operating features with solenoid	
		De-energized	Energized
V4I.2E	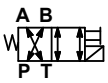	P ↔ B A ↔ T	P ↔ A B ↔ T

Technical Data

General		
Max. working pressure	bar (psi)	see diagram
Max. flow	l/min (gpm)	25 (6,60)

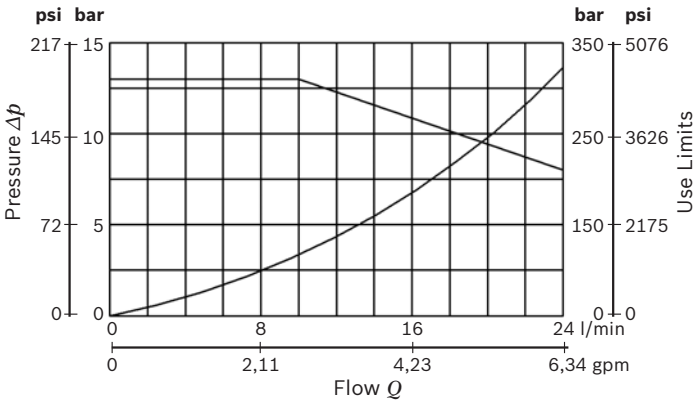

S4-CEI Coil Voltage Available

Voltage
12 Volts D.C.
24 Volts D.C.
24 Volts RAC
110 Volts RAC
220 Volts RAC

V4DS-3P Series

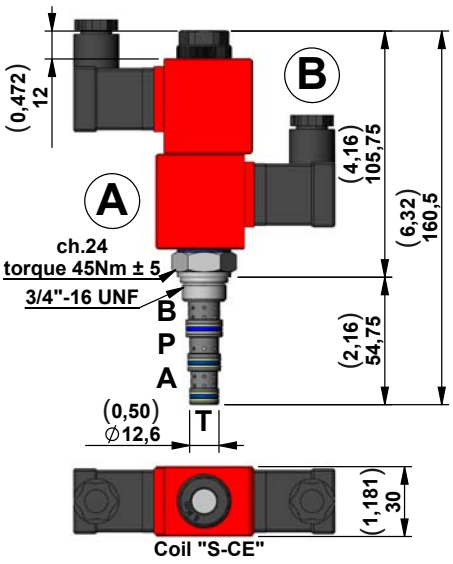

4 Way 3 Position Solenoid Valves Spool Type

Code	Type	Material Number
V4.3A	K01V389657A00	R932009303
V4.3B	K01V389657B00	R932009304
V4.3C	K01V389657C00	R932009305

Description

4 Way 3 Position Solenoid Valves Spool Type

- **Only for D.C. current.**
- Minimum operating voltage: 90% of nominal.

Valve symbol

Code	Symbol	Operating features with solenoid		
		Energized A	De-energized	Energized B
V4.3A	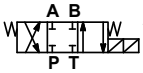	P -> B A -> T	P P A A B B T T	P -> A B -> T
V4.3B	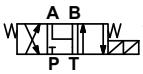	P -> B A -> T	A → T B → T P	P -> A B -> T
V4.3C	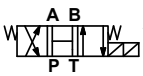	P -> B A -> T	P P A <-> A B B T T	P -> A B -> T

Technical Data

General		
Max. working pressure	bar (psi)	210 (3046)
Max. flow	l/min (gpm)	8 (2,11)

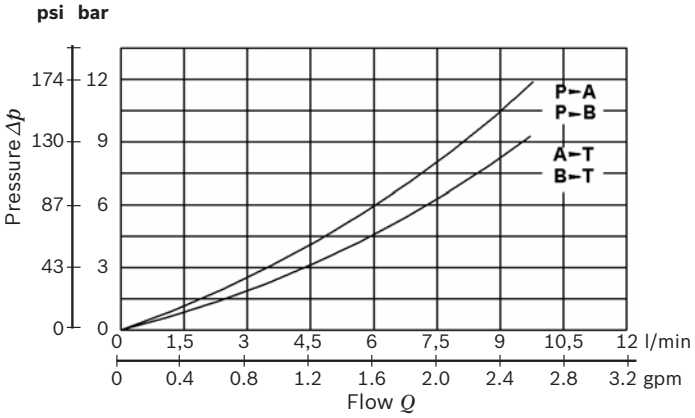

S-CE Coil Voltage Available

Voltage
12 Volts D.C.
24 Volts D.C.
48 Volts D.C.
24 Volts RAC
48 Volts RAC
110 Volts RAC
220 Volts RAC

V4D-CEI-3P Series

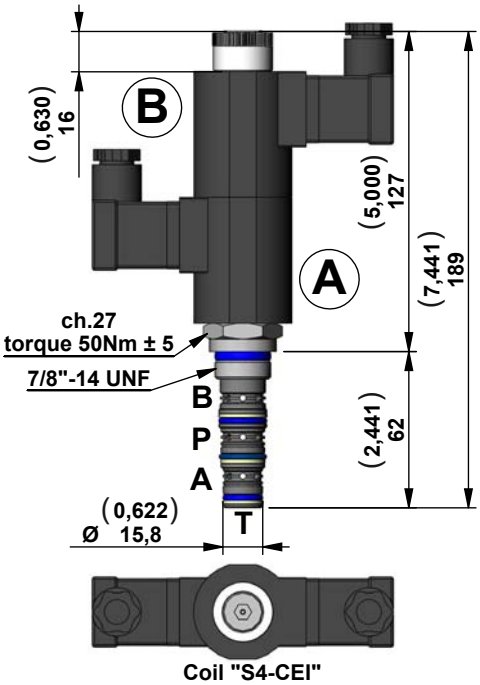

4 Way 3 Position Solenoid Valves Spool Type

Code	Type	Material Number
V4I.3C	K01V389633C10	R932009308

Description

4 Way 3 Position Solenoid Valves, Spool Type
- Only for D.C. current.
- Minimum operating voltage: 90% of nominal.
- Push Type Emergency (only function coil B).

Valve symbol

Code	Symbol	Operating features with solenoid		
		Energized A	De-energized	Energized B
V4I.3C	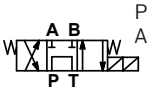	P → B A → T	A ◇ B ◇ P → T	P → A B → T

Technical Data

General		
Max. working pressure	bar (psi)	see diagram
Max. flow	l/min (gpm)	25 (6,60)

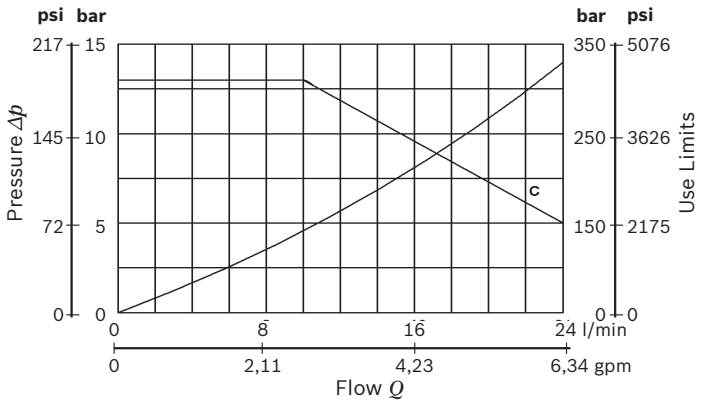

S4-CEI Coil Voltage Available

Voltage
12 Volts D.C.
24 Volts D.C.
24 Volts RAC
110 Volts RAC
220 Volts RAC

COIL Model S-CE – 18W – ED 100%

for valves VE3-NC, VE3-NA, V4DS-2P, V4DS-3P Series

Coil protection: Polyamide resin with fiber glass for Heat insulation class F (155°C (311°F)) IXEF for Heat insulation class H (180°C (356°F)).

Solenoids “S-CE” (18 W) are designed for continuos duty ED100%.

Ambient temperature range: -15°/+40°

Inlet voltage fluctuations must not exceed +/- 10% of nominal voltage to obtain correct operations and long life coils

Protection degree: see tables below

DIN 43650 - ISO 4400 IP65 with connector assembled

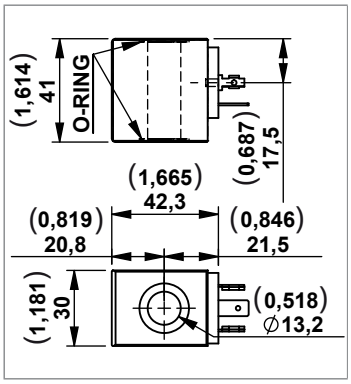

Code	Voltage	Heat Insulation class	Type	Material Number
OB	12 Volts D.C.	F (155°C) (311°F)	C166455OB1	R932000804
OC	24 Volts D.C.	F (155°C) (311°F)	C166455OC1	R932000805
OD	48 Volts D.C.	F (155°C) (311°F)	C166455OD1	R932000806
OBH	12 Volts D.C.	H (180°C) (356°F)	C166462OB1	R932000819
OCH	24 Volts D.C.	H (180°C) (356°F)	C166462OC1	R932000820
OV	24 Volts RAC	H (180°C) (356°F)	C166462OV1	R932000821
OK	48 Volts RAC	H (180°C) (356°F)	C166462OK1	R932008238
OW	110 Volts RAC	H (180°C) (356°F)	C166462OW1	R932008239
OZ	220 Volts RAC	H (180°C) (356°F)	C166462OZ1	R932000822

AMP JUNIOR IP67

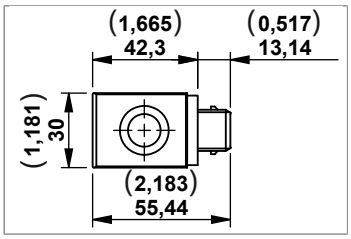

Code	Voltage	Heat Insulation class	Type	Material Number
OBA	12 Volts D.C.	F (155°C) *(311°F)*	C166458OB1	R932000815
OCA	24 Volts D.C.	F (155°C) *(311°F)*	C166458OC1	R932000816

SINGLE LEAD IP54

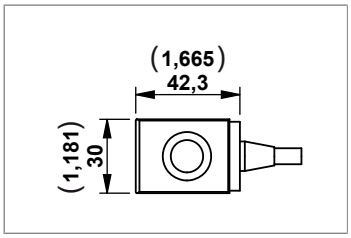

Code	Voltage	Heat Insulation class	Type	Material Number
OBL	12 Volts D.C.	F (155°C) *(311°F)*	C166467OB00600F	R932009109
OCL	24 Volts D.C.	F (155°C) *(311°F)*	C166467OC00600F	R932007010
Cable Lenght 600mm				

DEUTSCH DT04-2P-V IP67

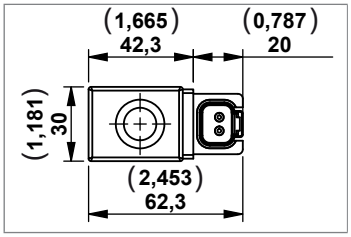

Code	Voltage	Heat Insulation class	Type	Material Number
OBD	12 Volts D.C.	F (155°C) *(311°F)*	C166463OB1	R932000823
OCD	24 Volts D.C.	F (155°C) *(311°F)*	C166463OC1	R932009110

COIL Model S2-CE – 18W – ED 100%
for valves VE1-NC Series

Coil protection: Polyamide resin with fiber glass for Heat insulation class F (155°C) (311°F).
Solenoids “S2-CE” (18 W) are designed for continuos duty ED100%.
Ambient temperature range : -15°/+40°
Inlet voltage fluctuations must not exceed +/- 10% of nominal voltage to obtain correct operations and long life coils
Protection degree: IP65 IEC 144 – DIN 40050 (total protection against dust and low pressure jets) with connector

DIN 43650 - ISO 4400 IP65 (with connector assembled)

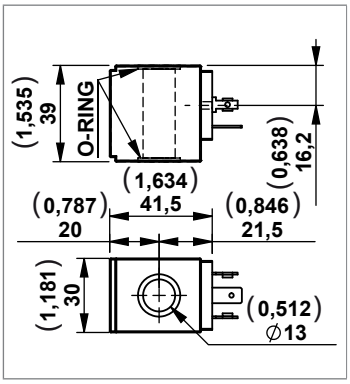

Code	Voltage	Heat Insulation class	Type	Material Number
OH	24 Volts 50 Hz A.C.	F (155°C) *(311°F)*	C166401OH1	R932000762
ON	220 Volts 50 Hz A.C.	F (155°C) *(311°F)*	C166401ON1	R932000766
OP	24 Volts 60 Hz A.C.	F (155°C) *(311°F)*	C166401OP1	R932000767
OS	220 Volts 60 Hz A.C.	F (155°C) *(311°F)*	C166401OS1	R932000769
OU	24 Volts 50-60 Hz A.C.	F (155°C) *(311°F)*	C166401OU1	R932000771

COIL Model S4-CEI – 26W – ED 100%
for valves V3D-DT , V4D-CEI-2P , V4D-CEI-3P Series

Coil protection: Polyamide resin with fiber glass for Heat insulation class F (155°C) (311°F).
Solenoids “S4-CEI” (18 W) are designed for continuos duty ED100%.
Ambient temperature range: -15°/+40°
Inlet voltage fluctuations must not exceed +/- 10% of nominal voltage to obtain correct operations and long life coils
Protection degree: see tables below

DIN 43650 - ISO 4400 IP65 with connector assembled

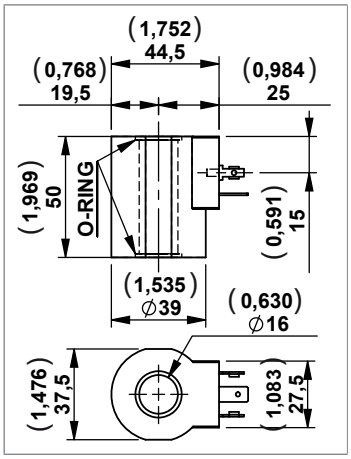

Code	Voltage	Heat Insulation class	Type	Material Number
OB	12 Volts D.C.	F (155°C) (311°F)	C166437OB1	R932000789
OC	24 Volts D.C.	F (155°C) (311°F)	C166437OC1	R932000790
OV	24 Volts RAC	F (155°C) (311°F)	C166437OV1	R932000791
OW	110 Volts RAC	F (155°C) (311°F)	C166437OW1	R932000792
OZ	220 Volts RAC	F (155°C) (311°F)	C166437OZ1	R932000793

AMP JUNIOR IP67

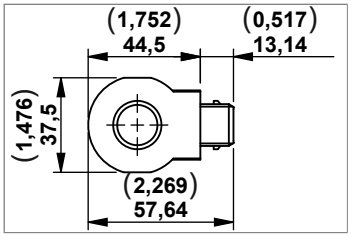

Code	Voltage	Heat Insulation class	Type	Material Number
OBA	12 Volts D.C.	F (155°C) (311°F)	C166471OB1	R932000835
OCA	24 Volts D.C.	F (155°C) (311°F)	C166471OC1	R932000836

SINGLE LEAD IP54

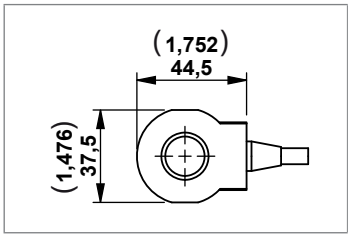

Code	Voltage	Heat Insulation class	Type	Material Number
OBL	12 Volts D.C.	F (155°C) (311°F)	C166453OB00600F	R932009107
OCL	24 Volts D.C.	F (155°C) (311°F)	C166453OC00600F	R932007009
Cable Lenght 600mm				

DEUTSCH DT04-2P-V IP67

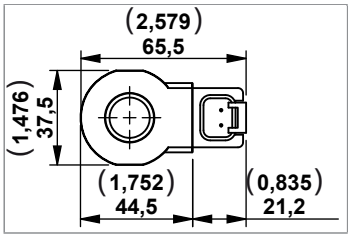

Code	Voltage	Heat Insulation class	Type	Material Number
OBD	12 Volts D.C.	F (155°C) (311°F)	C166461OB1	R932000818
OCD	24 Volts D.C.	F (155°C) (311°F)	C166461OC1	R932009108

CONNECTOR IP67 - EN175000 (DIN 4350-A) / ISO 4400

Ambient temperature - Standard		°C (°F)	- 20 to + 60 (-4 to +140°F)
Type of protection according to DIN 40050			IP67 with cable socket mounted and locked
Operating voltage		V	Choose the proper ordering code according to the circuit
Maximum operating current	Standard	A	16
	With rectifier	A	1
Number of pins			2 + PE
Clamping range for cables having an outer diameter of		mm (inch)	5, up to 10 (0,2 up to 0,4)
Cable entry			Pg9 / Pg11 (unified)
Maximum cable cross-section		mm^2 ($inch^2$)	1.5 (0,002)

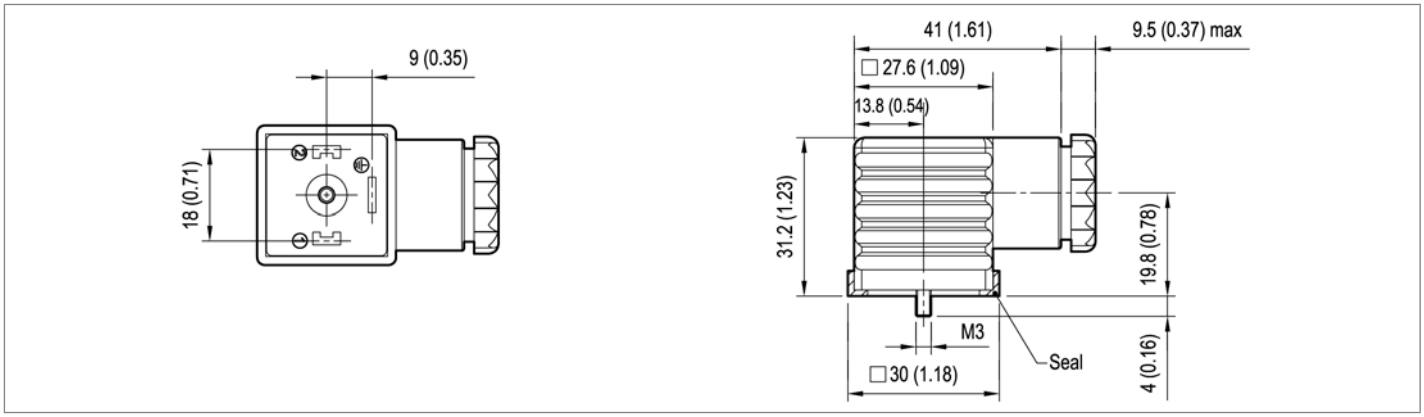

Standard Circuit

Code	Colour	Cable entry	Type	Material Number
WC	Without Connector			
CS	black	Pg9 / Pg11	OD016901000000	R934004344
	grey	Pg9 / Pg11	OD016901000003	R934004346

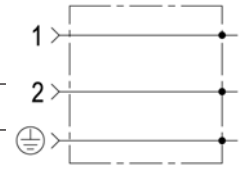

Circuit with VDR + Wave Rectifier

Code	Voltage V		Diode Capacity I max	Colour	Cable entry	Type	Material Number
	AC	DC					
CR	230	/	1A	black	Pg9 / Pg11	OD01690201OZ00	R934004353

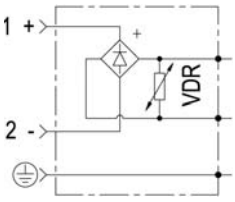

Note
Diode with capacity max 1 Amp.

Note
Black is the standard colour. Grey is used in case of valves with 2 coils (V4DS-3P and V4D-CEI-3P Series).

MC

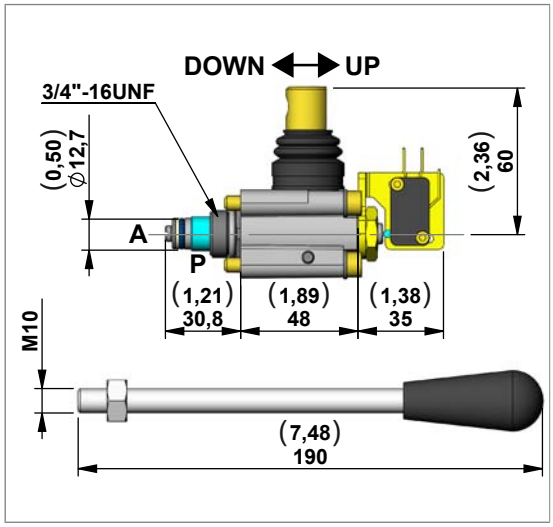

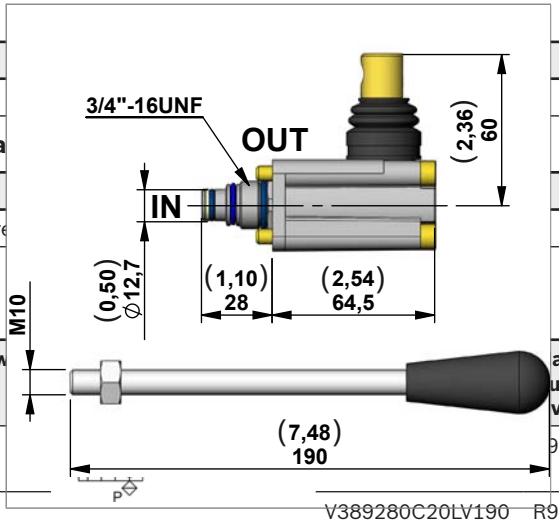

Type			
K250113000			

Technical Data

General	
Max. working pre	

2 Way Manual

Code	Microsw		
MC	without		
MC17	with	V389280C20LV190	R932003811

Type	
K250113000	

Technical Data

General	
Max. working pressure	
Displacement	

Hand pump (1.5cc)

Code	Diagram
PMC12	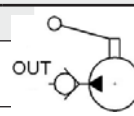
932003809	

MCR

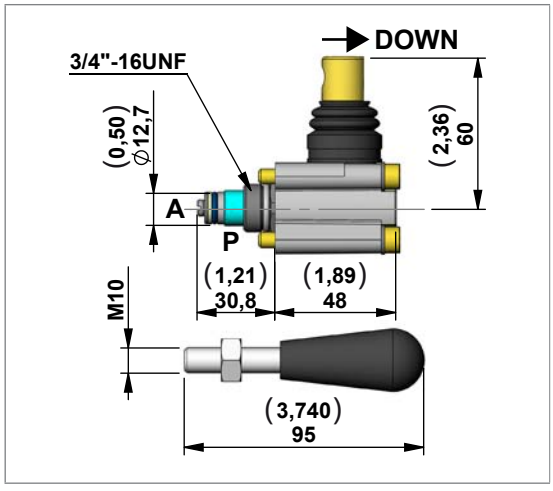

Type	Material Number
K250121000	R932002451

Technical Data

General		
Max. working pressure	bar (psi)	300 (4500)

2 Way Manual Operated Cartridge Valve

Code	Diagram	Compatibility	Type with lever	Material Number with lever
MCR	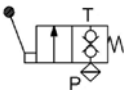	K - KE	V389281020LV095	R932003816

PMC12

Material Number	
R932002448	
bar (psi)	300 (4500)
cc	1,5

Code	Type	Material Number
TC4	R3897TA226	R932003201

Plug for Cavity

Type with lever	Material Number with lever
K01V388540LV190	R932009298

Code	Type	Material Number
TC3	R3897TA301	R932003211

Plug for Cavity

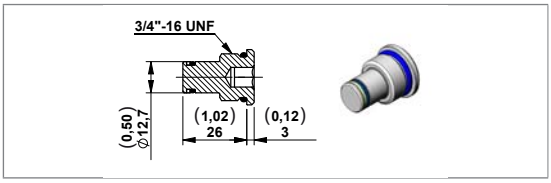

Code	Diagram	Compatibility	Type	Material Number
TC2	P T	K - KE	R3897TA001	R932003193

1/4” Auxiliary Return Port

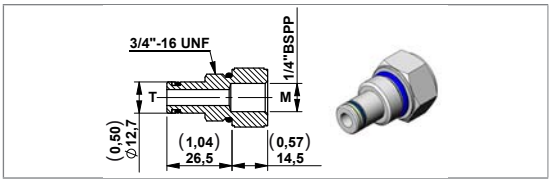

Code	Diagram	Compatibility	Type	Material Number
TS2	M P T	K - KE	R3897TA304	R932003214

3/8” Auxiliary Return Port

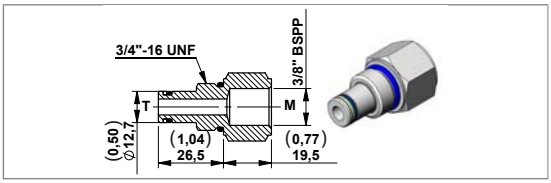

Code	Diagram	Compatibility	Type	Material Number
TS3	M P T	K - KE	R3897TA147	R932003195

1/4” Auxiliary Pressure Port

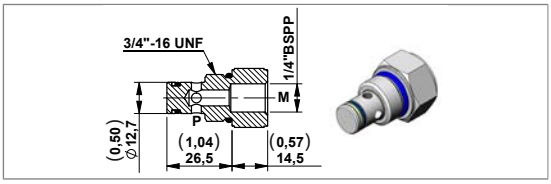

Code	Diagram	Compatibility	Type	Material Number
TM2	M P T	K - KE	R3897TA305	R932003215

1/4” Auxiliary Pressure Port

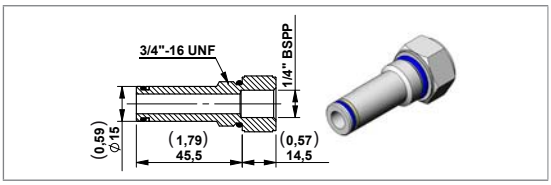

Code	Diagram	Compatibility	Type	Material Number
TM3		K - KE	R3897TA303	R932003213

3/8” Auxiliary Pressure Port

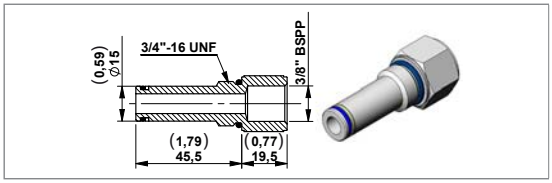

Code	Diagram	Compatibility	Type	Material Number
TM4		K - KE	R3897TA311	R932003220

Check Valve with Pressure Port 1/4” BSPP for manifolds K series

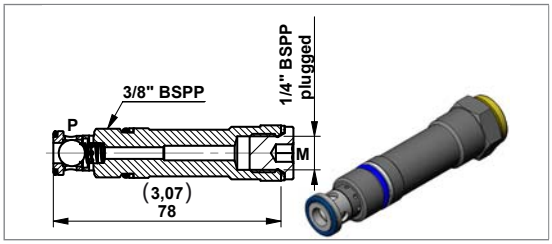

Code	Diagram	Compatibility	Type	Material Number
TPR		K	V389259000	R932003782

Pressure Compensated Flow Regulator

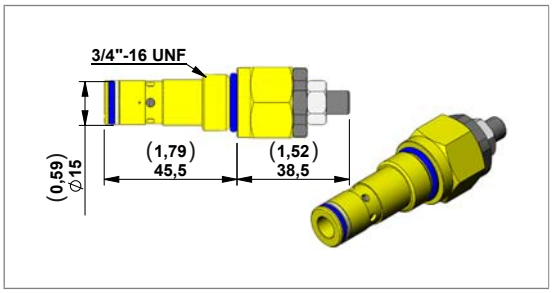

Code	Diagram		Type	Material Number
ST6CP-PR		K - KE	V389534A00	R932003917

Technical Data

General		
Max. working pressure	bar (psi)	250 (3625)
Regulated Flow Rate	l/min (gpm)	2....16 (0.53...4.23)

Flow Control Valves Pressure Compensated

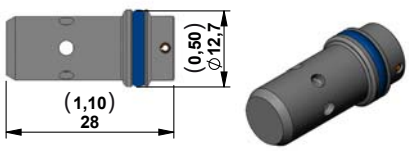

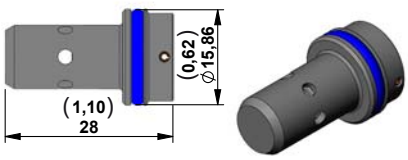

Code		l/min (gpm)	Diagram	Compatibility	Type	Material Number
STF12P	A	1 (0,3)		K - KE	V38953600A	R932003940
	B	2 (0,5)			V38953600B	R932003941
	C	3 (0,8)			V38953600C	R932003942
	D	4 (1,1)			V38953600D	R932003943
	E	5 (1,3)			V38953600E	R932003944
	F	6 (1,6)			V38953600F	R932003945
	G	7 (1,9)			V38953600G	R932003946
	H	8 (2,1)			V38953600H	R932003947
	I	9 (2,4)			V38953600I	R932003948
	L	10 (2,6)			V38953600L	R932003949
STF14P	A	1 (0,3)		KE - KS	V38951900A	R932003892
	B	2 (0,5)			V38951900B	R932003894
	C	3 (0,8)			V38951900C	R932003895
	D	4 (1,1)			V38951900D	R932003896
	E	5 (1,3)			V38951900E	R932003897
	F	6 (1,6)			V38951900F	R932003898
	G	7 (1,9)			V38951900G	R932003899
	H	8 (2,1)			V38951900H	R932003900
	I	9 (2,4)			V38951900I	R932003901
	L	10 (2,6)			V38951900L	R932003903

Flow Control Valves Pressure Compensated

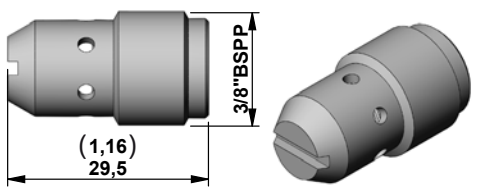

Code		l/min (gpm)	Diagram	Compatibility	Type	Material Number
STF38	B	2 (0,5)		KE	V38951500B	R932003860
	C	3 (0,8)			V38951500C	R932003861
	D	4 (1,1)			V38951500D	R932003862
	E	5 (1,3)			V38951500E	R932003864
	F	6 (1,6)			V38951500F	R932003866
	G	7 (1,9)			V38951500G	R932003868
	H	8 (2,1)			V38951500H	R932003870
	I	9 (2,4)			V38951500I	R932003872
	L	10 (2,6)			V38951500L	R932003876
	M	11 (2,9)			V38951500M	R932003877
	N	12 (3,2)			V38951500N	R932003878
	O	13 (3,4)			V38951500O	R932003879
	P	14 (3,7)			V38951500P	R932003880
	Q	15 (4,0)			V38951500Q	R932003881
	R	16 (4,2)			V38951500R	R932003882
	T	18 (4,7)			V38951500T	R932003884
	Z	20 (5,3)			V38951500Z	R932003888

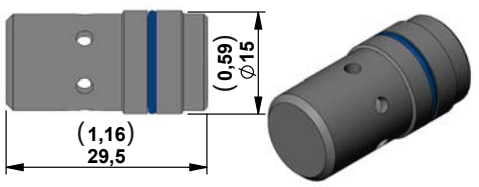

Code		l/min (gpm)	Diagram	Compatibility	Type	Material Number
STF38P	B	2 (0,5)		K - KE	V38953500B	R932003918
	C	3 (0,8)			V38953500C	R932003919
	D	4 (1,1)			V38953500D	R932003920
	E	5 (1,3)			V38953500E	R932003921
	F	6 (1,6)			V38953500F	R932003922
	G	7 (1,9)			V38953500G	R932003923
	H	8 (2,1)			V38953500H	R932003924
	I	9 (2,4)			V38953500I	R932003925
	L	10 (2,6)			V38953500L	R932003927
	M	11 (2,9)			V38953500M	R932003928
	N	12 (3,2)			V38953500N	R932003929
	O	13 (3,4)			V38953500O	R932003930
	P	14 (3,7)			V38953500P	R932003932
	Q	15 (4,0)			V38953500Q	R932003933
	R	16 (4,2)			V38953500R	R932003934
	T	18 (4,7)			V38953500T	R932003935
	Z	20 (5,3)			V38953500Z	R932003938

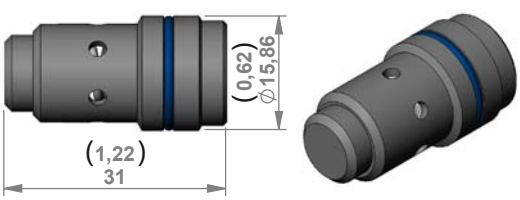

Code		l/min (gpm)	Diagram	Compatibility	Type	Material Number
STF 38PKS	B	2 (0,5)		KS00	V38955300B	R930052912
	C	3 (0,8)			V38955300C	R930052913
	D	4 (1,1)			V38955300D	R930052914
	E	5 (1,3)			V38955300E	R932004010
	F	6 (1,6)			V38955300F	R930046482
	G	7 (1,9)			V38955300G	R930052915
	H	8 (2,1)			V38955300H	R930052916
	I	9 (2,4)			V38955300I	R932004011
	L	10 (2,6)			V38955300L	R930052917
	M	11 (2,9)			V38955300M	R930052920
	N	12 (3,2)			V38955300N	R932004013
	O	13 (3,4)			V38955300O	R930046484
	P	14 (3,7)			V38955300P	R932004015
	Q	15 (4,0)			V38955300Q	R932004016
	R	16 (4,2)			V38955300R	R930052918
	T	18 (4,7)			V38955300T	R932004020
	Z	20 (5,3)			V38955300Z	R930052919

Gear Pumps Group 1 for KE - K - KS

Standard Version

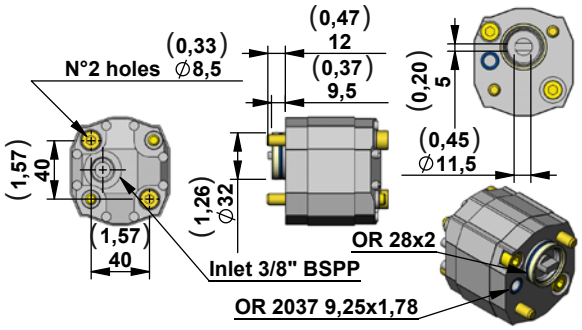

P2: intermittent max Pressure.
P3: peak Max Pressure (max 2 seconds)

Code	Displacement cc/rev	Flow at 1500 rpm l/min (gpm)	P2 bar (psi)	P3 bar (psi)	Type	Material Number
10	0,9	1,35 (0,36)	230(3336)	270(3916)	K01CV640S1248	R932009230
11	1,1	1,65 (0,44)	230(3336)	270(3916)	K01CV640S1204	R932009231
12	1,6	2,4 (0,63)	230(3336)	270(3916)	K01CV10110322	R932007475
13	2	3 (0,79)	230(3336)	270(3916)	K01CV10110323	R932007477
14	2,5	3,75 (0,99)	230(3336)	270(3916)	K01CV10112317	R932007479
15	3,15	4,7 (1,24)	210(3046)	250(3626)	K01CV10112318	R932007481
16	4	6 (1,58)	210(3046)	250(3626)	K01CV10114321	R932007483

High Pressure Gear Pumps Group 1 for KE - K - KS

Cast iron covers version for high pressure applications

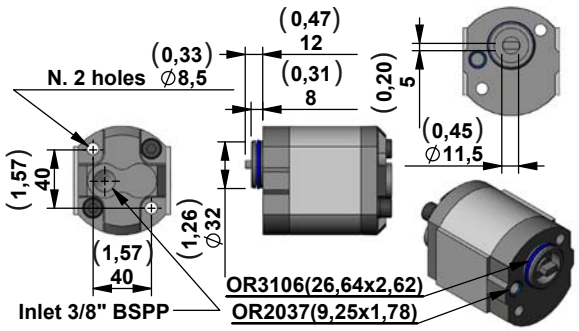

P2: intermittent max Pressure.
P3: peak Max Pressure (max 2 seconds)

Code	Displacement cc/rev	Flow at 1500 rpm l/min (gpm)	P2 bar (psi)	P3 bar (psi)	Type	Material Number
11GH	1,25	1,8 (0,48)	300(4351)	350(5076)	K01CV640S1142C	R932007474
12GH	1,6	2,4 (0,63)	300(4351)	350(5076)	K01CV640S1144C	R932007476
13GH	2	3 (0,79)	300(4351)	350(5076)	K01CV640S1145C	R932007478
14GH	2,5	3,7 (0,98)	300(4351)	350(5076)	K01CV640S1146C	R932007480
15GH	3,15	4,7 (1,24)	280(4061)	330(4786)	K01CV640S1147C	R932007482
16GH	3,65	5,5 (1,45)	250(3626)	300(4351)	K01CV640S1148C	R932007484
17GH	4,2	6,3 (1,66)	230(3336)	280(4061)	K01CV640S1149C	R932007485
18GH	5	7,5 (1,98)	210(3046)	250(3626)	K01CV640S1150C	R932007486
19GH	5,7	8,5 (2,24)	210(3046)	250(3626)	K01CV640S1153C	R932007487
20GH	7,4	11,1 (2,93)	180(2611)	230(3336)	K01CV640S1152C	R932007488

Note
All pumps have anti-clockwise rotation.

Gear Pumps Group 1 for K

Elastic couplings version with tapered shaft*

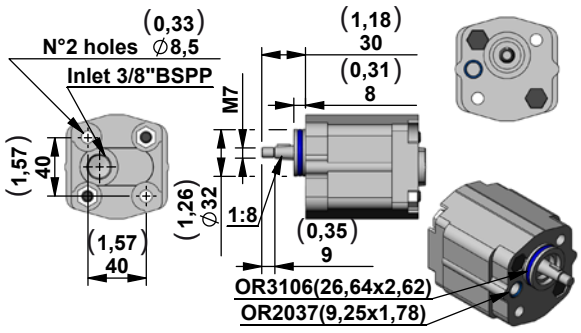

P2: intermittent max Pressure.
P3: peak Max Pressure (max 2 seconds)

Code	Displacement cc/rev	Flow at 1500 rpm l/min (gpm)	P2 bar (psi)	P3 bar (psi)	Type	Material Number
10CON	0,82	1,3 (0,34)	230(3336)	270(3916)	K01CV640S1132	R932007498
11CON	1,1	1,6 (0,42)	230(3336)	270(3916)	K01CV64017000	R932007499
12CON	1,6	2,4 (0,63)	230(3336)	270(3916)	K01CV64018000	R932007500
13CON	2,1	3,1 (0,82)	230(3336)	270(3916)	K01CV64019000	R932007501
14CON	2,7	3,9 (1,03)	230(3336)	270(3916)	K01CV64020000	R932007502
15CON	3,2	4,8 (1,27)	210(3046)	250(3626)	K01CV64021000	R932007503
16CON	3,7	5,5 (1,45)	210(3046)	250(3626)	K01CV64022000	R932007504
17CON	4,2	6,3 (1,66)	210(3046)	250(3626)	K01CV64023000	R932007505
18CON	4,8	7,2 (1,90)	190(2756)	230(3336)	K01CV64024000	R932007506
19CON	5,8	8,7 (2,30)	190(2756)	230(3336)	K01CV64025000	R932007507
20CON	7,9	11,8 (3,12)	160(2320)	200(2901)	K01CV64026000	R932007508

***Note**
The assembly of the gear pumps with tapered shaft are only possible in the manifolds K series with the following junction elements:
- Motor size IEC71: junction element code F82
- Motor size IEC80: junction element code F24
- Motor size IEC90: junction element code F25
- Motor size IEC100-112: junction element code F26

Oil Tanks for KE - K - KS

Technical Data for Plastic Tanks

Temperature range	°C (°F)	-15....+70 (5....158)
Materials		PE=Polyethylene - PP=Polypropilene
Seal		For tanks codes S335-S336-S337-S338-S339-S340-S341-S342 is necessary to use the O-RING Ø112x3 Code: C000191000 R-Number:R932000190. For all the other tanks except the codes above is necessary to use the O-RING 4437 (Ø110,7x3,53) Code:110201203000000 R-Number:R932000188

Code	Tank capacity l (USgal)	Useable capacity l (USgal)	L mm (inch)	Material	Type	Material Number	Drawing
S335	1,0 (0,26)	0,7 (0,18)	140 (5,51)	PP	K01K3976SE372	R932002035	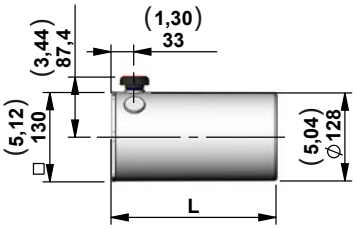
S336	1,8 (0,48)	1,2 (0,32)	180 (7,09)	PP	K01K3976SE373	R932002036	
S337	2,5 (0,66)	1,7 (0,45)	240 (9,45)	PP	K01K3976SE374	R932002037	
S338	3,0 (0,79)	2,3 (0,61)	285 (11,22)	PP	K01K3976SE375	R932002038	

For this tanks is necessary to use the O-RING Ø112x3 code: C000191000 R-Number: R932000190

Code	Tank capacity l (USgal)	Useable capacity l (USgal)	H mm (inch)	Material	Type	Material Number	Drawing
S339	1,0 (0,26)	0,6 (0,16)	140 (5,51)	PP	K01K3976SE376	R932007882	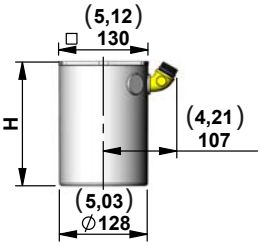
S340	1,8 (0,48)	1,1 (0,29)	180 (7,09)		K01K3976SE377	R932007883	
S341	2,5 (0,66)	1,7 (0,45)	240 (9,45)		K01K3976SE378	R932007884	
S342	3,0 (0,79)	2,3 (0,61)	285 (11,22)		K01K3976SE379	R932007885	

For this tanks is necessary to use the O-RING Ø112x3 code: C000191000 R-Number: R932000190

Code	Tank capacity l (USgal)	Useable capacity l (USgal)	-	Material	Type	Material Number	Drawing
S246	1 (0,26)	0,9 (0,24)	-	PE	K01K3976SE270	R932002016	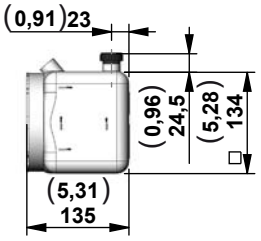

Code	Tank capacity l (USgal)	Useable capacity l (USgal)	L mm (inch)	Material	Type	Material Number	Drawing
S247	1,8 (0,48)	1,6 (0,42)	170 (6,71)	PE	K01K3976SE271	R932002017	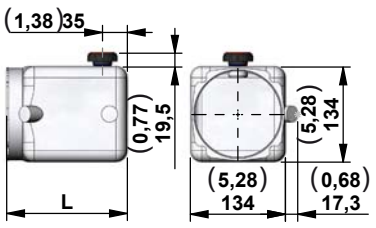
S248	2,5 (0,66)	2,2 (0,58)	240 (9,45)	PE	K01K3976SE272	R932002018	

Plastic Tanks

Code	Tank capacity l (USgal)	Useable capacity l (USgal)	H mm (inch)	Material	Type	Material Number	Drawing
S249	1 (0,26)	0,9 (0,24)	135 (5,31)	PE	K01K3976SE273	R932002019	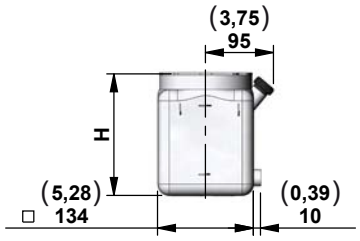
S250	1,8 (0,48)	1,6 (0,42)	170 (6,71)	PE	K01K3976SE274	R932002020	
S251	2,5 (0,66)	2,2 (0,58)	240 (9,45)	PE	K01K3976SE275	R932002021	

Code	Tank capacity l (USgal)	Useable capacity l (USgal)	L mm (inch)	Material	Type	Material Number	Drawing
S343	5 (1,32)	3,8 (1,00)	230 (9,05)	PE	K01K3976SE380	R932002039	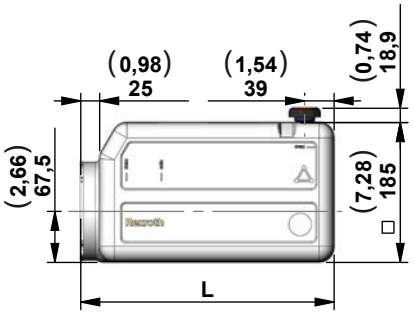
S331	5 (1,32)	3,8 (1,00)	230 (9,05)	PE Black	K01K3976SE368	R932007872	
S413	7 (1,85)	5,5 (1,45)	310 (12,20)	PE	K01K3976SE439	R932007873	
S414	7 (1,85)	5,5 (1,45)	310 (12,20)	PE Black	K01K3976SE440	R932007874	
S415	8 (2,11)	6,5 (1,72)	335 (13,19)	PE	K01K3976SE441	R932006036	
S416	8 (2,11)	6,5 (1,72)	335 (13,19)	PE Black	K01K3976SE442	R932007875	
S316	9 (2,38)	7,3 (1,93)	365 (14,37)	PE	K01K3976SE351	R932002031	
S314	9 (2,38)	7,3 (1,93)	365 (14,37)	PE Black	K01K3976SE451	R932007876	
S417	12 (3,17)	10 (2,64)	495 (19,50)	PE	K01K3976SE443	R932006768	
S418	12 (3,17)	10 (2,64)	495 (19,50)	PE Black	K01K3976SE444	R932007877	

Code	Tank capacity l (USgal)	Useable capacity l (USgal)	H mm (inch)	Material	Type	Material Number	Drawing
S344	5 (1,32)	3,5 (0,92)	230 (9,05)	PE	K01K3976SE381	R932002040	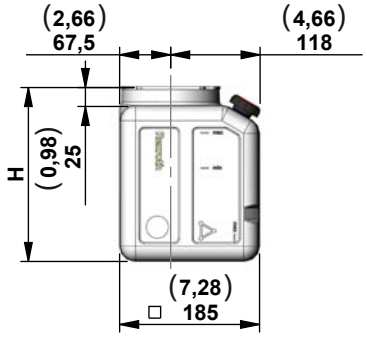
S332	5 (1,32)	3,5 (0,92)	230 (9,05)	PE Black	K01K3976SE369	R932008240	
S419	7 (1,85)	5,5 (1,45)	310 (12,20)	PE	K01K3976SE445	R932007879	
S420	7 (1,85)	5,5 (1,45)	310 (12,20)	PE Black	K01K3976SE446	R932007880	
S421	8 (2,11)	6,5 (1,72)	335 (13,19)	PE	K01K3976SE447	R932006037	
S422	8 (2,11)	6,5 (1,72)	335 (13,19)	PE Black	K01K3976SE448	R932007881	
S315	9 (2,38)	7,3 (1,93)	365 (14,37)	PE	K01K3976SE350	R932002030	
S313	9 (2,38)	7,3 (1,93)	365 (14,37)	PE Black	K01K3976SE348	R932002029	
S423	12 (3,17)	10 (2,64)	495 (19,50)	PE	K01K3976SE449	R932006038	
S424	12 (3,17)	10 (2,64)	495 (19,50)	PE Black	K01K3976SE450	R932006278	

Plastic Tanks

Code	Tank capacity l (USgal)	Useable capacity l (USgal)	H mm (inch)	Material	Type	Material Number	Drawing
S428	15 (3,96)	13 (3,43)	595 (23,42)	PE Black	K01K3976SE456	R932009317	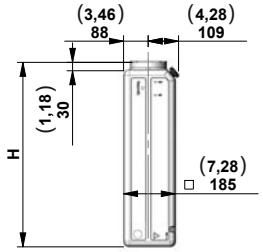
S430	17 (4,50)	15 (3,96)	660 (25,98)	PE	K01K3976SE459	R932009316	
S429	17 (4,50)	15 (3,96)	660 (25,98)	PE Black	K01K3976SE457	R932008291	

Code	Tank capacity l (USgal)	Useable capacity l (USgal)	L mm (inch)	Material	Type	Material Number	Drawing
S395	3 (0,79)	1,7 (0,45)	140 (5,51)	PE	K01K3976SE470	R932007903	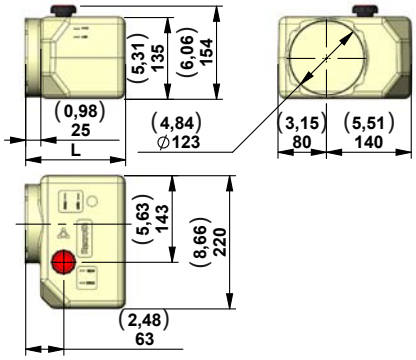
S396	3,7 (0,98)	2,2 (0,58)	165 (6,50)	PE	K01K3976SE471	R932007904	
S392	5 (1,32)	3,1 (0,82)	215 (8,46)	PE	K01K3976SE464	R932007365	
S394	8,4 (2,22)	5,5 (1,45)	340 (13,39)	PE	K01K3976SE466	R932007435	
S397	12,7 (3,35)	8,4 (2,2)	500 (19,68)	PE	K01K3976SE472	R932007905	

Code	Tank capacity l (USgal)	Useable capacity l (USgal)	H mm (inch)	Material	Type	Material Number	Drawing
S434	3 (0,79)	1,7 (0,45)	140 (5,51)	PE	K01K3976SE478	R932007910	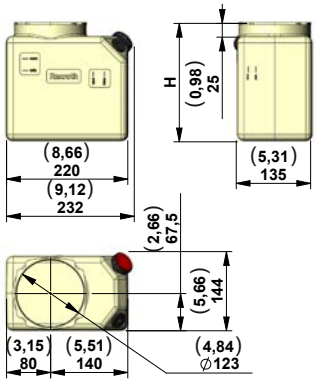
S435	3,7 (0,98)	2,2 (0,58)	165 (6,50)	PE	K01K3976SE479	R932007911	
S436	5 (1,32)	3,1 (0,82)	215 (8,46)	PE	K01K3976SE480	R932007912	
S437	8,4 (2,22)	5,5 (1,45)	340 (13,39)	PE	K01K3976SE481	R932007913	
S438	12,7 (3,35)	8,4 (2,2)	500 (19,68)	PE	K01K3976SE482	R932007914	
S442	10 (2,64)	7 (1,85)	190 (7,18)	PE	K01K3976SE492	R932010792	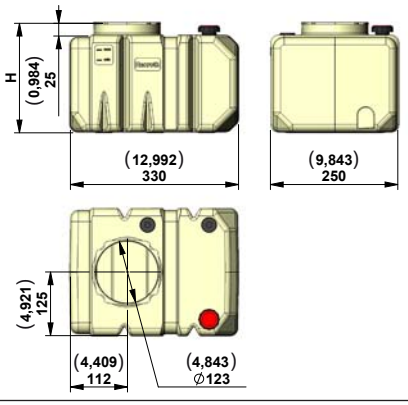
S443	12 (3,17)	9 (2,38)	215 (8,46)	PE	K01K3976SE493	R932010793	
S444	15 (3,96)	12,5 (3,30)	265 (10,43)	PE	K01K3976SE494	R932010794	
S445	20 (5,28)	17,5 (4,62)	330 (12,99)	PE	K01K3976SE495	R932010795	

Plastic Tanks

Code	Tank capacity l (USgal)	Useable capacity l (USgal)	L mm (inch)	Material	Type	Material Number	Drawing
S374	5 (1,32)	4 (1,06)	219 (8,62)	PE	K01K3976SE415	R932002042	
S376	7 (1,85)	5,4 (1,43)	271 (10,67)		K01K3976SE417	R932002044	
S378	8 (2,11)	6,6 (1,74)	323 (12,72)		K01K3976SE419	R932002046	
S380	11 (2,91)	9,6 (2,54)	453 (17,83)		K01K3976SE421	R932002048	

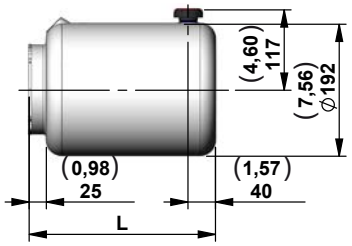

Code	Tank capacity l (USgal)	Useable capacity l (USgal)	H mm (inch)	Material	Type	Material Number	Drawing
S375	5 (1,32)	4 (1,06)	219 (8,62)	PE	K01K3976SE416	R932002043	
S377	7 (1,85)	5,4 (1,43)	271 (10,67)		K01K3976SE418	R932002045	
S379	8 (2,11)	6,6 (1,74)	323 (12,72)		K01K3976SE420	R932002047	
S381	11 (2,91)	9,6 (2,54)	453 (17,83)		K01K3976SE422	R932002049	

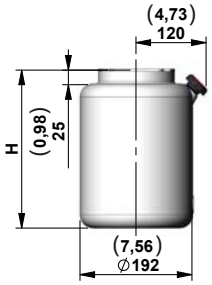

Assembly Kit for Plastic Tank

Oil Tank	Code for KE	Material Number	Please make sure that the tank and motor are mounted correctly
S335 - S336 - S337 - S338 - S339 - S340 S341 - S342	K2501VT006	R932002436	
S246 - S247 - S248 - S249 - S250 - S251	K2501VT007	R932002437	
S413 - S414 - S419 - S420 - S415 - S416 - S421 - S422 - S332 - S344 - S313 - S315 - S343 - S331 - S316 - S314 - S374 - S375 - S376 - S377 - S378 - S379 - S380 - S381 - S417 - S418 - S423 - S424 - S395 - S396 - S392 - S394 - S397 - S434 - S435 - S436 - S437 - S438 - S428 - S430 - S429 - S442 - S443 - S444 - S445	K2501VT014	R932002440	

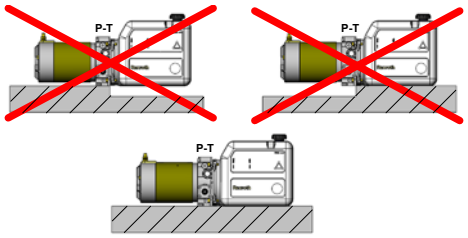

Oil Tank	Code for K	Material Number
S335 - S336 - S337 - S338 - S339 - S340 S341 - S342	K2501VT001	R932002433
S246 - S247 - S248 - S249 - S250 - S251	K2501VT002	R932002434
S413 - S414 - S419 - S420 - S415 - S416 - S421 - S422 - S332 - S344 - S313 - S315 - S343 - S331 - S316 - S314 - S374 - S375 - S376 - S377 - S378 - S379 - S380 - S381 - S417 - S418 - S423 - S424 - S395 - S396 - S392 - S394 - S397 - S434 - S435 - S436 - S437 - S438 - S428 - S430 - S429 - S442 - S443 - S444 - S445	K2501VT013	R932002439

Oil Tank	Code for KS	Material Number
S335 - S336 - S337 - S338 - S339 - S340 S341 - S342	K2501VT016	R932007391
S246 - S247 - S248 - S249 - S250 - S251	K2501VT015	R932008244
S413 - S414 - S419 - S420 - S415 - S416 - S421 - S422 - S332 - S344 - S313 - S315 - S343 - S331 - S316 - S314 - S374 - S375 - S376 - S377 - S378 - S379 - S380 - S381 - S417 - S418 - S423 - S424 - S395 - S396 - S392 - S394 - S397 - S434 - S435 - S436 - S437 - S438 - S428 - S430 - S429 - S442 - S443 - S444 - S445	K2501VT026	R930053718

Oil Tanks for KE - K

Technical Data for Steel Tanks

Temperature range	°C (°F)	-15....+80 (5....176)
Materials		Steel
Colors		Black paint finish
Seal		For all the steel tanks is necessary to use the O-RING 4437 (Ø110,7x3,53) Code:110201203000000 - R-Number:R932000188

Steel collar for Tanks

Code	Type	Material Number	Drawing
S00	K224201000	R932006279	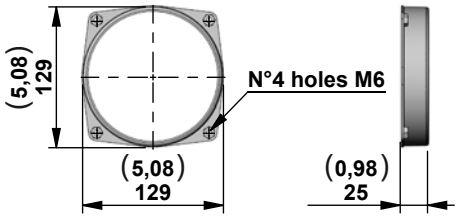

Steel Tanks

Code	Tank capacity l (USgal)	Useable capacity l (USgal)	L mm (inch)	A mm (inch)	Type	Material Number	Drawing
S01	1 (0,26)	0,7 (0,18)	133 (5,24)	35 (1,38)	K01K3976SE001	R932001937	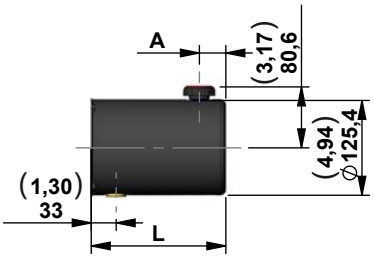
S20	1,8 (0,48)	1,2 (0,32)	178 (7,01)	35 (1,38)	K01K3976SE026	R932001953	
S02	2,5 (0,66)	1,7 (0,45)	238 (9,37)	60 (2,36)	K01K3976SE003	R932001939	
S161	3 (0,79)	2,3 (0,61)	280 (11,02)	60 (2,36)	K01K3976SE186	R932001987	
S107	4 (1,06)	3,2 (0,84)	409 (16,10)	60 (2,36)	K01K3976SE119	R932001970	

Code	Tank capacity l (USgal)	Useable capacity l (USgal)	L mm (inch)	A mm (inch)	Type	Material Number	Drawing
S144	1,8 (0,48)	1,2 (0,32)	178 (7,01)	35 (1,38)	K01K3976SE168	R932001983	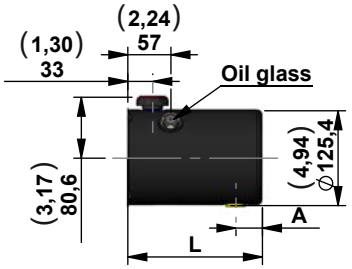
S142	2,5 (0,66)	1,7 (0,45)	238 (9,37)	60 (2,36)	K01K3976SE166	R932001981	

Code	Tank capacity l (USgal)	Useable capacity l (USgal)	H mm (inch)	A mm (inch)	Type	Material Number	Drawing
S216	1 (0,26)	0,6 (0,16)	133 (5,24)	35 (1,38)	K01K3976SE246	R932002011	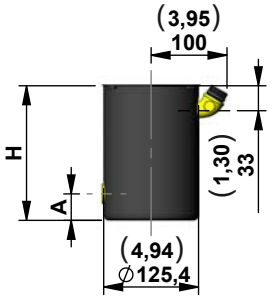
S217	1,8 (0,48)	1,1 (0,29)	178 (7,01)	35 (1,38)	K01K3976SE247	R932002012	
S218	2,5 (0,66)	1,7 (0,45)	238 (9,37)	60 (2,36)	K01K3976SE248	R932009269	
S239	3 (0,79)	2,3 (0,61)	280 (11,02)	60 (2,36)	K01K3976SE269	R932002015	
S107V	4 (1,06)	3,2 (0,84)	409 (16,10)	60 (2,36)	K01K3976SE161	R932001976	

Steel Tanks

Code	Tank capacity l (USgal)	Useable capacity l (USgal)	H mm (inch)	A mm (inch)	Type	Material Number	Drawing
S20V	1,8 (0,48)	1,1 (0,29)	178 (7,01)	35 (1,38)	K01K3976SE027	R932001954	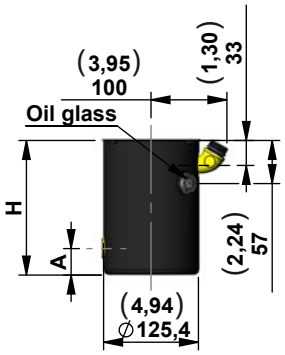
S02V	2,5 (0,66)	1,7 (0,45)	238 (9,37)	60 (2,36)	K01K3976SE004	R932001940	

Code	Tank capacity l (USgal)	Useable capacity l (USgal)	L mm (inch)	-	Type	Material Number	Drawing
S03	5 (1,32)	4 (1,06)	219 (8,62)	-	K01K3976SE005	R932001941	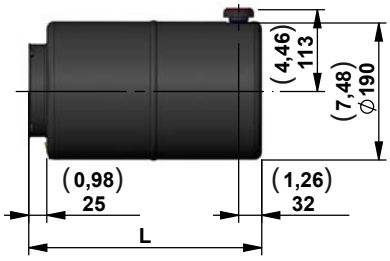
S34	7 (1,85)	5,4 (1,43)	271 (10,67)	-	K01K3976SE041	R932001956	
S04	8 (2,11)	6,6 (1,74)	323 (12,72)	-	K01K3976SE007	R932001943	
S109	11 (2,91)	9,6 (2,54)	453 (17,83)	-	K01K3976SE172	R932001985	

Code	Tank capacity l (USgal)	Useable capacity l (USgal)	H mm (inch)	-	Type	Material Number	Drawing
S03V	5 (1,32)	3 (7,9)	219 (8,62)	-	K01K3976SE006	R932001942	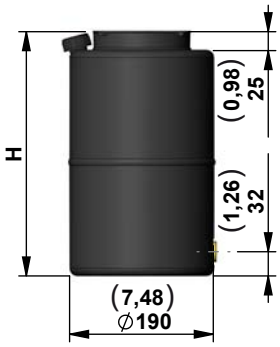
S34V	7 (1,85)	4,4 (1,16)	271 (10,67)	-	K01K3976SE042	R932001957	
S04V	8 (2,11)	5,8 (1,53)	323 (12,72)	-	K01K3976SE008	R932001944	
S109V	11 (2,91)	9,0 (2,38)	453 (17,83)	-	K01K3976SE121	R932001972	

Code	Tank capacity l (USgal)	Useable capacity l (USgal)	-	-	Type	Material Number	Drawing
S185	5 (1,32)	3 (7,9)	-	-	K01K3976SE345	R932007057	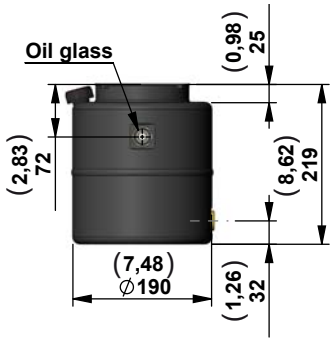

Steel Tanks

Code	Tank capacity l (USgal)	Useable capacity l (USgal)	Type	Material Number	Drawing
S106	5 (1,32)	3 (7,9)	K01K3976SE215	R932001997	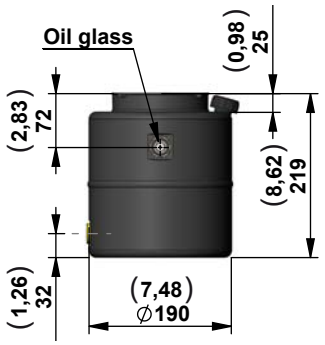
S108	8 (2,11)	5,8 (1,53)	K01K3976SE120	R932001971	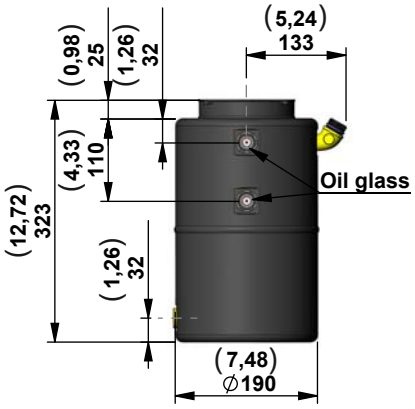
S94	8 (2,11)	6,6 (1,74)	K01K3976SE106	R932001965	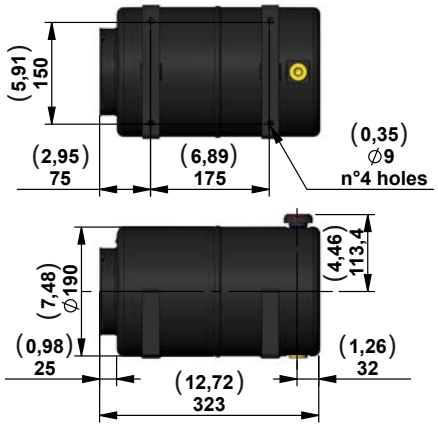
S177	9 (2,38)	7,7 (2,03)	K01K3976SE207	R932001994	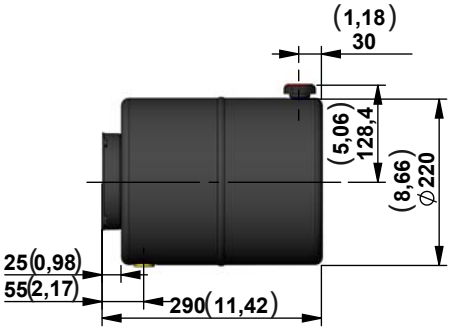

Steel Tanks

Code	Tank capacity l (USgal)	Useable capacity l (USgal)	Type	Material Number	Drawing
S178	9 (2,38)	6,9 (1,82)	K01K3976SE208	R932001995	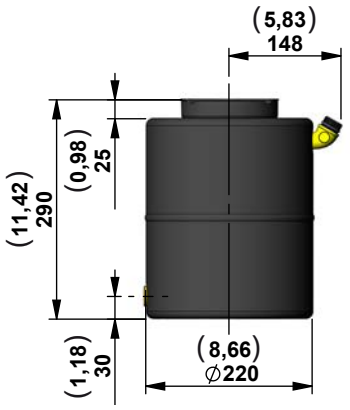

Code	Tank capacity l (USgal)	Useable capacity l (USgal)	A mm (inch)	B mm (inch)	C mm (inch)	L mm (inch)	Type	Material Number	Drawing
S90*	12 (3,17)	10,5 (2,77)	60 (2,36)	170 (6,69)	105 (4,13)	315 (12,40)	K01K3976SE100	R932001961	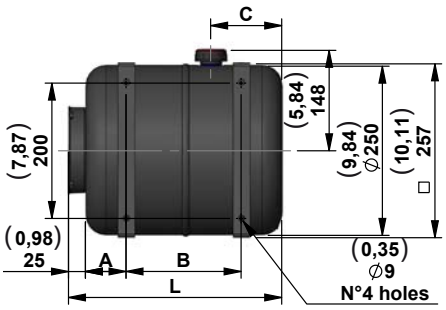
S128*	16 (4,23)	13 (3,43)	60 (2,36)	170 (6,69)	158 (6,22)	368 (14,49)	K01K3976SE151	R932001975	
S105*	19 (5,02)	15 (3,96)	52,5 (2,07)	290 (11,42)	158 (6,22)	420 (16,53)	K01K3976SE117	R932001969	
S92*	23 (6,08)	19 (5,02)	102,5 (4,03)	290 (11,42)	158 (6,22)	520 (20,47)	K01K3976SE102	R932001962	

Code	Tank capacity l (USgal)	Useable capacity l (USgal)	H mm (inch)	A mm (inch)	B mm (inch)	Type	Material Number	Drawing
S90V*	12 (3,17)	9 (2,38)	315 (12,40)	60 (2,36)	170 (6,69)	K01K3976SE103	R932001963	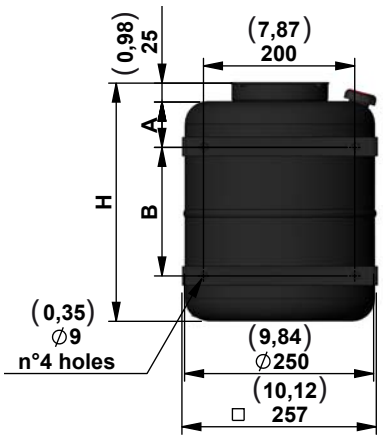
S92V*	23 (6,08)	18 (4,75)	520 (20,47)	102,5 (4,03)	290 (11,42)	K01K3976SE104	R932001964	

***Note**
In order to avoid to support the weight of motor by the collar of the tank when the tanks with fixing brakets are used, it is strongly suggested to support also the central manifold.

Steel Tanks

Code	Tank capacity l (USgal)	Useable capacity l (USgal)	Brackets	Type	Material Number	Drawing
S07	6 (1,58)	4 (1,06)	No	K01K3976SE013	R932001945	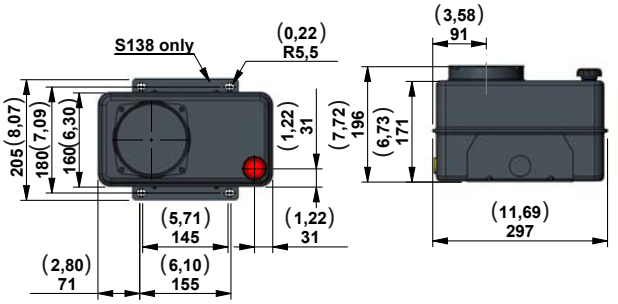
S138*	6 (1,58)	4 (1,06)	Yes	K01K3976SE162	R932001977	
S48	6 (1,58)	4 (1,06)	No	K01K3976SE056	R932001959	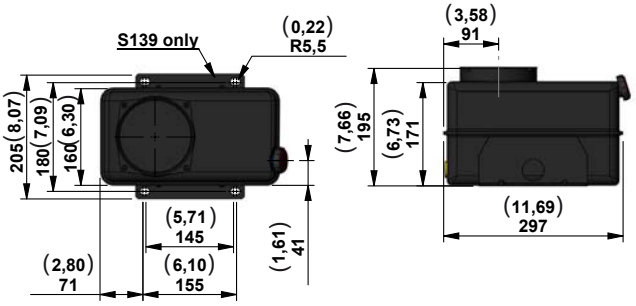
S139*	6 (1,58)	4 (1,06)	Yes	K01K3976SE163	R932001978	

Code	Tank capacity l (USgal)	Useable capacity l (USgal)	A mm (inch)	B mm (inch)	Type	Material Number	Drawing
S223*	8 (2,11)	6 (1,58)	156 (6,14)	131 (5,16)	K01K3976SE253	R932002013	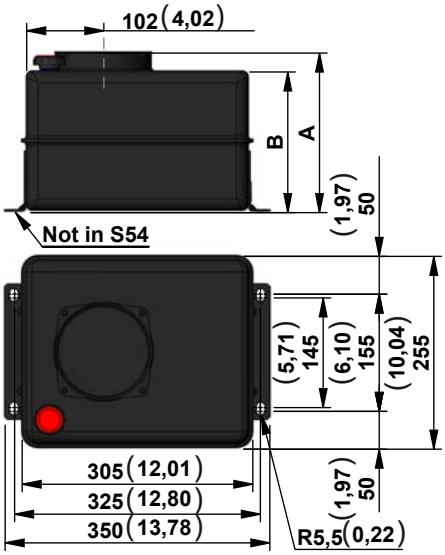
S54	12 (3,17)	9,5 (2,51)	210 (8,27)	186 (7,32)	K01K3976SE063	R932001960	
S140*	12 (3,17)	9,5 (2,51)	210 (8,27)	186 (7,32)	K01K3976SE164	R932001979	
S256*	14 (3,70)	12 (3,17)	235 (9,25)	211 (8,31)	K01K3976SE280	R932002022	
S141*	15 (3,96)	13 (3,43)	261 (10,28)	236 (9,29)	K01K3976SE165	R932001980	
S143*	20 (5,28)	18 (4,75)	329 (12,95)	305 (12,01)	K01K3976SE167	R932001982	

***Note**
In order to avoid to support the weight of motor by the collar of the tank when the tanks with fixing brakets are used, it is strongly suggested to support also the central manifold.

Steel Tanks

Code	Tank capacity l (USgal)	Useable capacity l (USgal)	Type	Material Number	Drawing
S184*	15 (3,96)	13 (3,43)	K01K3976SE214	R932001996	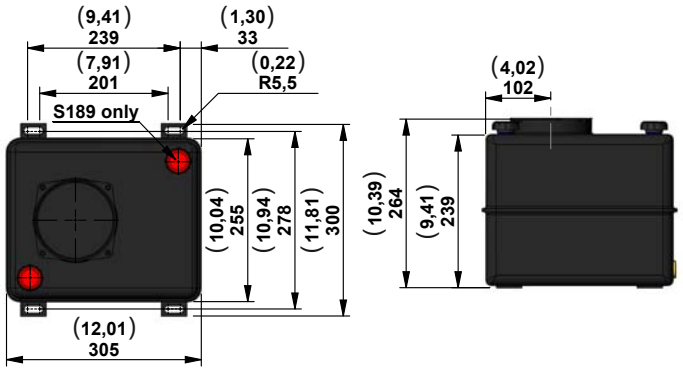
S189*	15 (3,96)	13 (3,43)	K01K3976SE219	R932001998	

***Note**
In order to avoid to support the weight of motor by the collar of the tank when the tanks with fixing brakets are used, it is strongly suggested to support also the central manifold.

Steel Tanks

Code	Tank capacity l (USgal)	Useable capacity l (USgal)	A mm (inch)	B mm (inch)	C mm (inch)	L x W mm (inch)	Type	Material Number	Drawing
S09	20 (5,28)	12,5 (3,30)	285 (11,22)	53 (2,09)	207 (8,15)	340x270 (13,4x10,6)	K01K3976SE015	R932001946	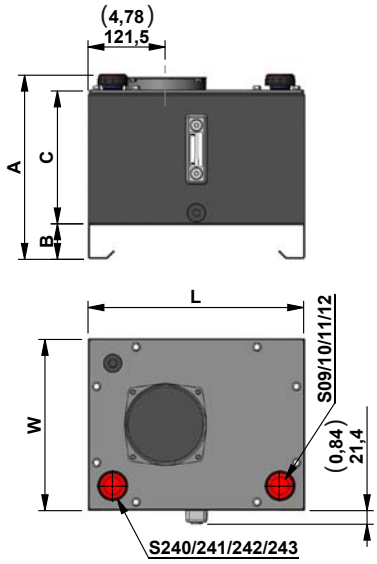
S240	20 (5,28)	12,5 (3,30)	285 (11,22)	53 (2,09)	207 (8,15)	340x270 (13,4x10,6)	K01K3976SE195	R932001989	
S10	30 (7,92)	22,5 (5,94)	405 (15,94)	58 (2,28)	322 (12,68)	340x270 (13,4x10,6)	K01K3976SE016	R932001947	
S241	30 (7,92)	22,5 (5,94)	405 (15,94)	58 (2,28)	322 (12,68)	340x270 (13,4x10,6)	K01K3976SE196	R932001990	
S11	45 (11,89)	30 (7,92)	344 (13,54)	58 (2,28)	261 (10,28)	540x320 (21,3x12,6)	K01K3976SE017	R932001948	
S242	45 (11,89)	30 (7,92)	344 (13,54)	58 (2,28)	261 (10,28)	540x320 (21,3x12,6)	K01K3976SE197	R932001991	
S12	60 (15,85)	44 (11,62)	435 (17,13)	58 (2,28)	352 (13,86)	540x320 (21,3x12,6)	K01K3976SE018	R932001949	
S243	60 (15,85)	44 (11,62)	435 (17,13)	58 (2,28)	352 (13,86)	540x320 (21,3x12,6)	K01K3976SE198	R932001992	

Code	Tank capacity l (USgal)	Useable capacity l (USgal)	A mm (inch)	B mm (inch)	Type	Material Number	Drawing
S211	3,5 (0,92)	3 (0,79)	125 (4,92)	100 (3,94)	K01K3976SE241	R932002009	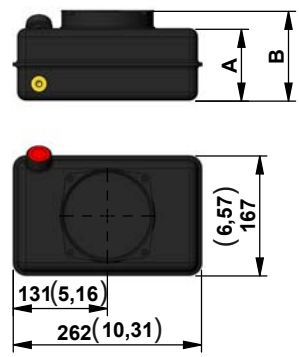
S212	8 (2,11)	7 (1,85)	245 (9,65)	220 (8,66)	K01K3976SE242	R932002010	

Aluminium Tanks for KE - K

Code	Tank capacity l (USgal)	Useable capacity l (USgal)	Type	Material Number	Drawing
S31	10 (2,64)	8,3 (2,19)	K01K3976SE038	R932001955	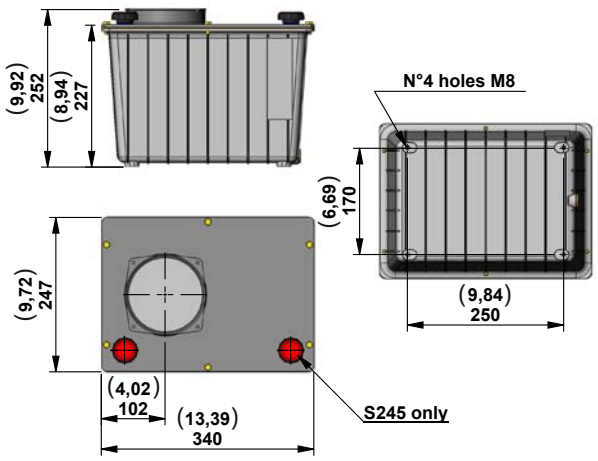
S245	10 (2,64)	8,3 (2,19)	K01K3976SE199	R932001993	

Mounting position

Code		Code		Code	
O1	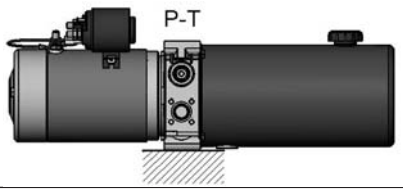	**O3**	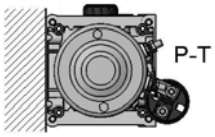	**V1**	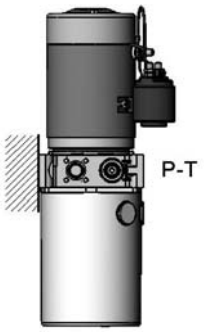
O2	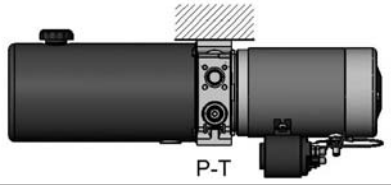	**O4**	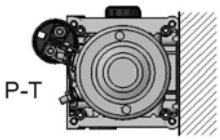		
-	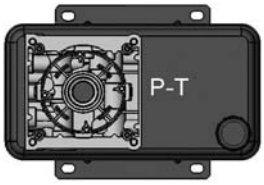	**O6**	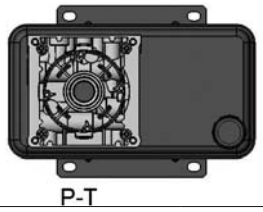		
O7	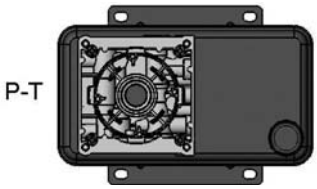	**O8**	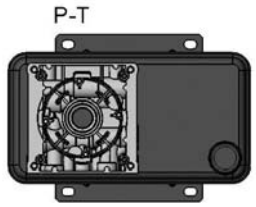		

Terminal Box Position for A.C. Motors

-	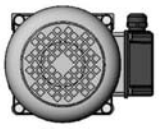	**M2**	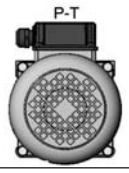
M3	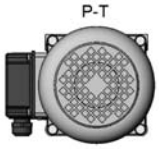	**M4**	

Relay Position for D.C. Motors

-	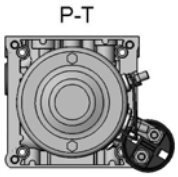	**R2**	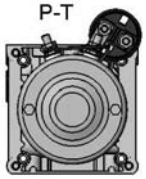
R3	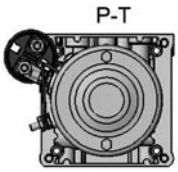	**R4**	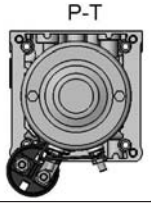

Oil Cap Position for V1 only

Code		Code	
-	P-T	LU	P-T
LO	P-T	LP	P-T

Mounting Brackets

Support for Manifold KE Series

Code	Central manifold	Type	Material number	
G80	KE	K01F331514000	R932009395	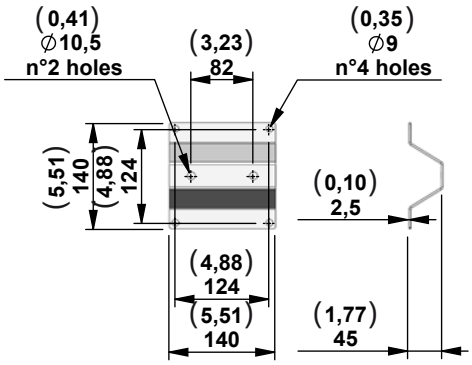

Support for Manifold K Series

Code	Central manifold	Type	Material number	
G07	K	K01K331507000	R932009393	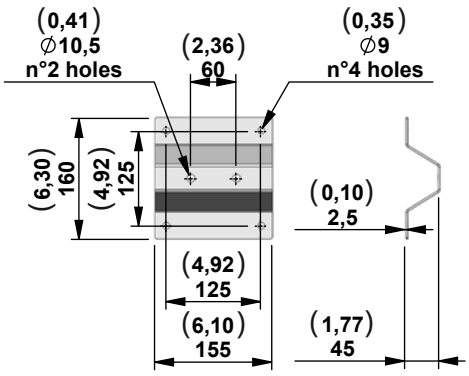
G07L	K	K01K331507000	R932009393	

Modular Stackable Elements

Space Modular Block

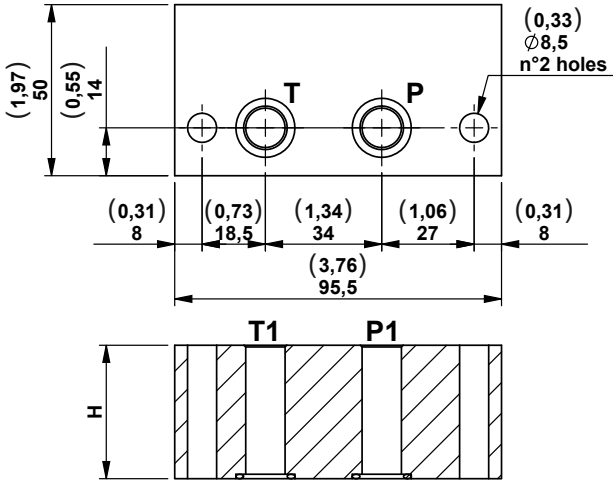

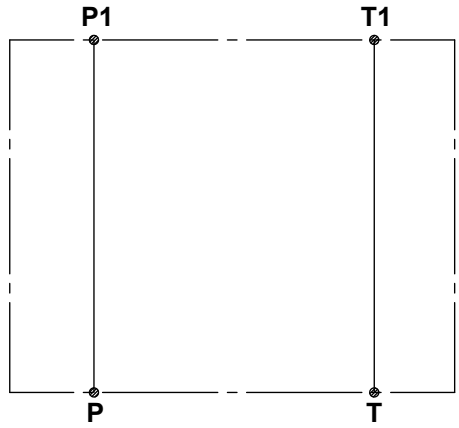

These modular blocks have been designed to have the ability to be assembled as a stack to allow clearence between flanges and motors of different sizes and types. Each block includes 2 OR 3056 gaskets.

Code	Description	Max working pressure bar (psi)	Max flow l/min (gpm)	Type	Material number
N09	Space modular block **H=18**	300 (4351)	40 (10,57)	G386010000	R932001058
N01	Space modular block **H=39**	300 (4351)	40 (10,57)	G386001000	R932001005
N02	Space modular block **H=69**	300 (4351)	40 (10,57)	G386038000	R932001122

Motor IEC71 frame Coupling TR02

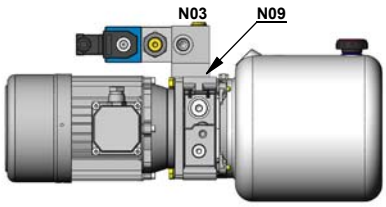

Motor IEC80 frame Coupling TR03

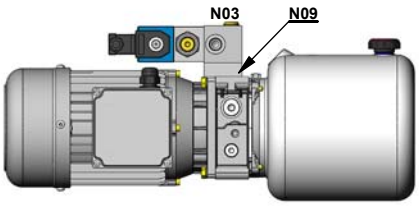

Motor IEC90 frame Coupling TR04

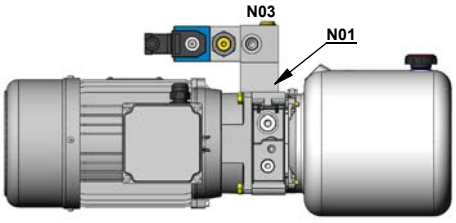

Motor IEC100 frame Coupling TR05

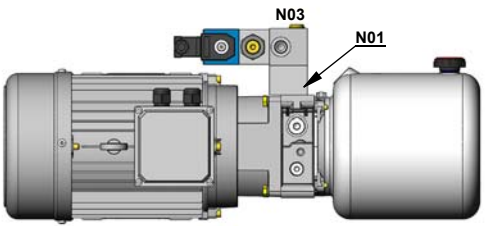

Motor IEC112 frame Coupling TR05

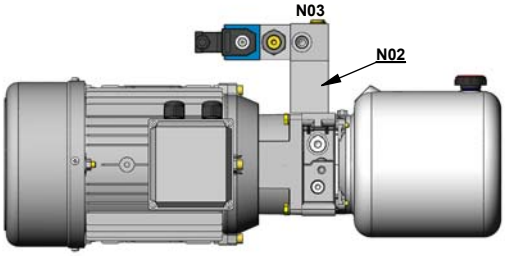

Dimensions [mm (inches)]

Space Modular Block

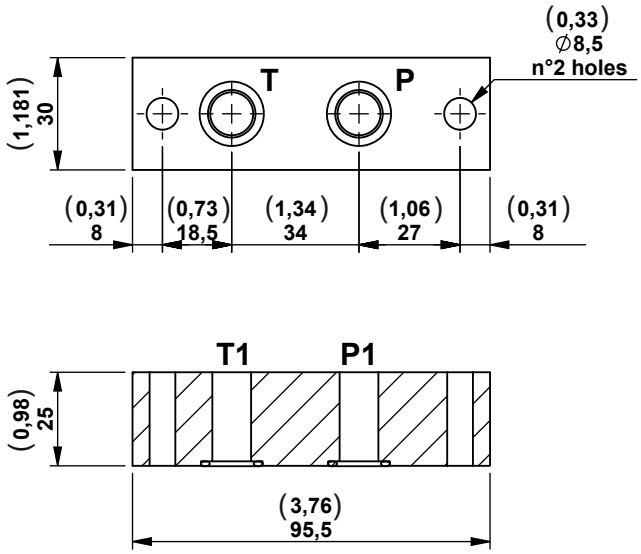

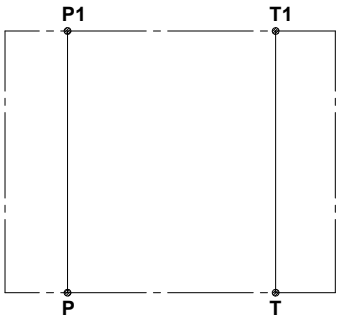

Space Modular Block to fix a compact mounting style electric motor on power module KE type.
This block includes 2 OR 3056 gaskets.

Code	Description	Max working pressure bar (psi)	Max flow l/min (gpm)	Type	Material number
N92	Space modular block	300 (4351)	40 (10,57)	G386091000	R932001167

Application Example

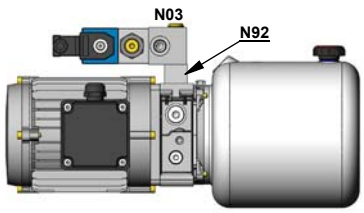

90° Rotation modular block

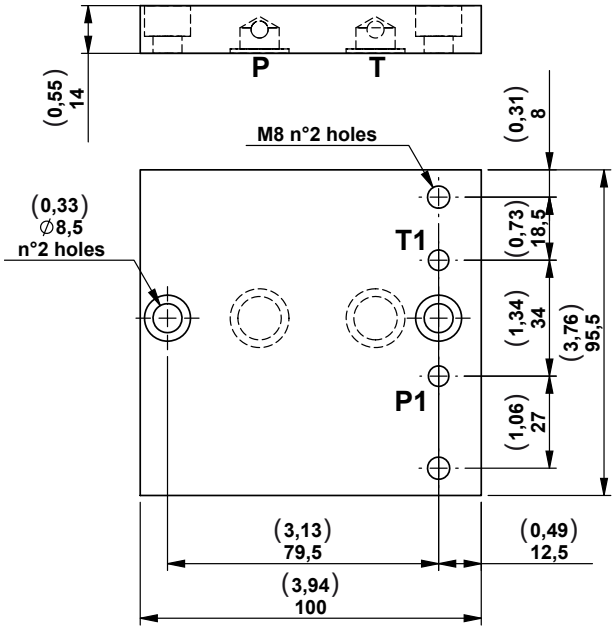

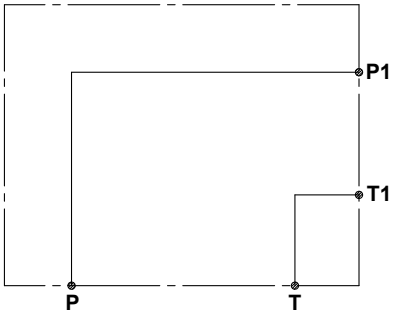

A modular block that is able to have a 90° rotation from our standard OILSISTEM configuration, but keeping the block on the same surface allowing a different position of any other modular block.
Each block includes 2 OR 2056 gaskets.

Code	Description	Max working pressure bar (psi)	Max flow l/min (gpm)	Type	Material number
N33	90° rotation modular block	300 (4351)	20 (5,28)	G386032000	R932001110

Application Example

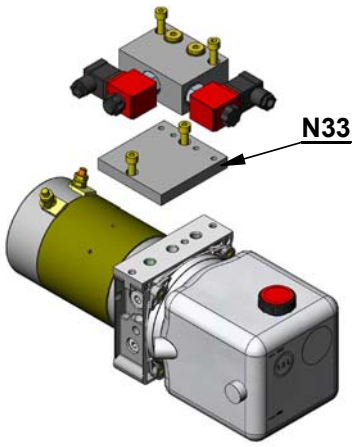

Dimensions [mm (inches)]

90° modular block allowing horizontal mounting (motor side)

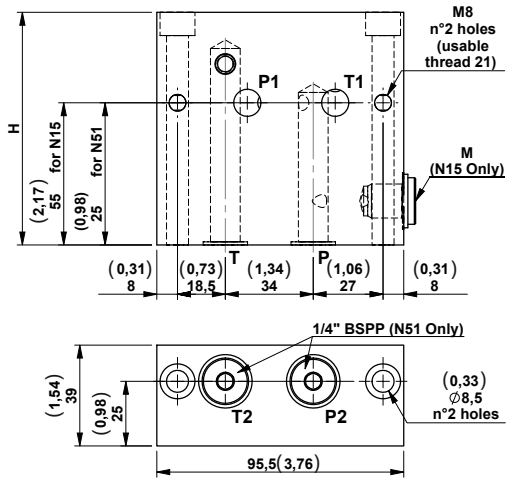

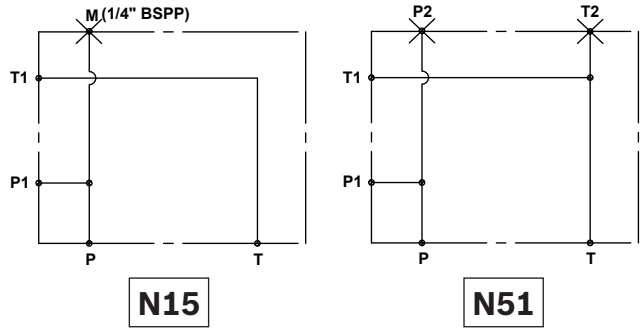

A modular block that is able to turn the standard assembling of 90°, in order to place other manifold blocks over the motor.

The “N15” block has a 1/4” BSPP port for Pressure Gauge. Each block includes 2 OR 2056 gaskets.

Code	Description	Max working pressure bar (psi)	Max flow l/min (gpm)	Type	Material number
N15	90° modular block allowing horizontal mounting (motor side) **H=90**	300 (4351)	35 (9,25)	G386014000	R932001087
N51	90° modular block allowing horizontal mounting (motor side) **H=60**	300 (4351)	35 (9,25)	G386050000	R932001146

Motor IEC71 frame Coupling TR02

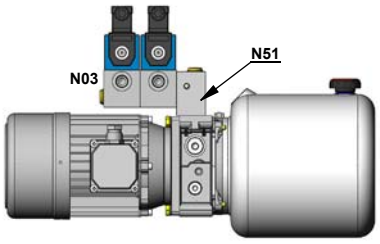

Motor IEC80 frame Coupling TR03

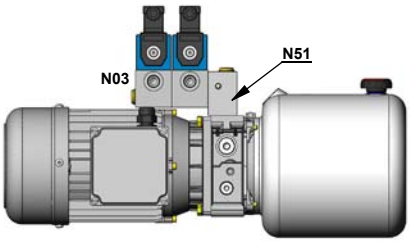

Motor IEC90 frame Coupling TR04

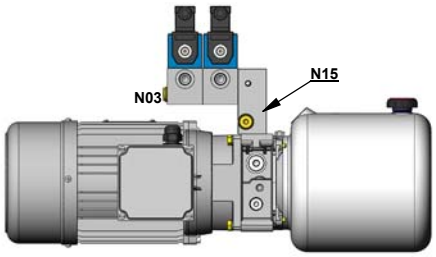

Motor IEC100 frame Coupling TR05

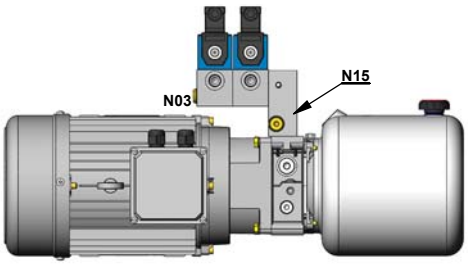

Motor IEC112 frame Coupling TR05

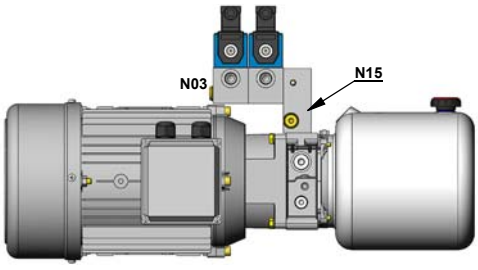

90° modular block allowing horizontal mounting (tank side)

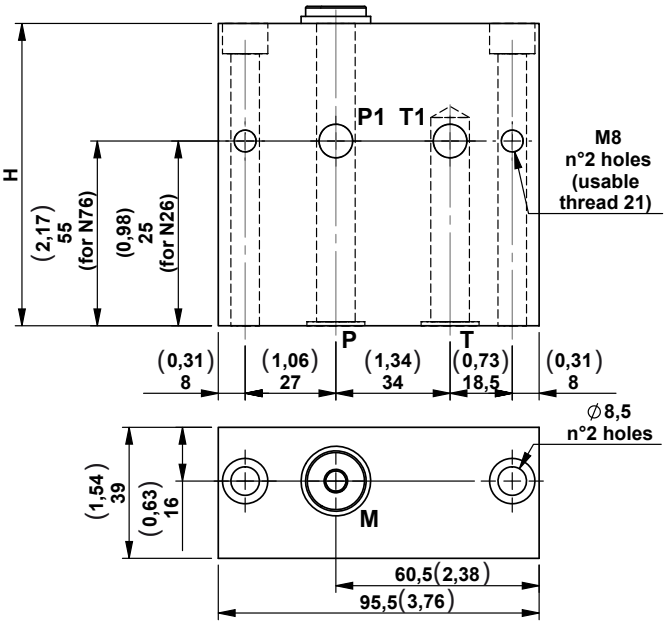

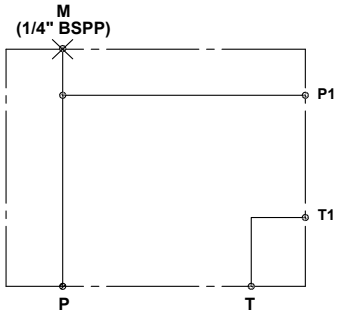

A modular block that is able to turn the standard assembling of 90°, in order to place other blocks over the tank.
The blocks have a 1/4” BSPP port for Pressure Gauge.
Each block includes 2 OR 2056 gaskets.

Code	Description	Max working pressure bar (psi)	Max flow l/min (gpm)	Type	Material number
N76	90° modular block allowing horizontal mounting (tank side) **H=90**	300 (4351)	35 (9,25)	G386075000	R932001153
N26	90° modular block allowing horizontal mounting (tank side) **H=60**	300 (4351)	35 (9,25)	G386025000	R932001100

Tank H=134

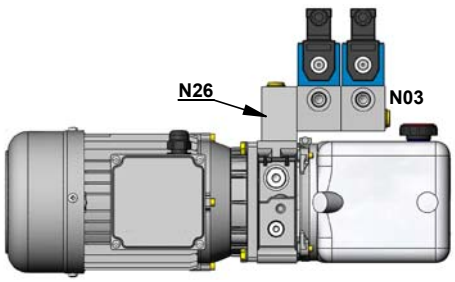

Tank Diameter Ø190

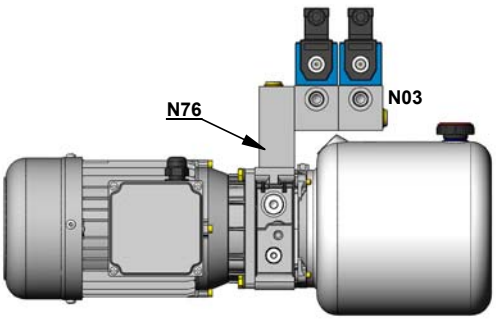

Dimensions [mm (inches)]

Modular blocks with threaded ports

Modular blocks with exit 3/8” BSPP.

Each block includes 2 OR 2056 gaskets.

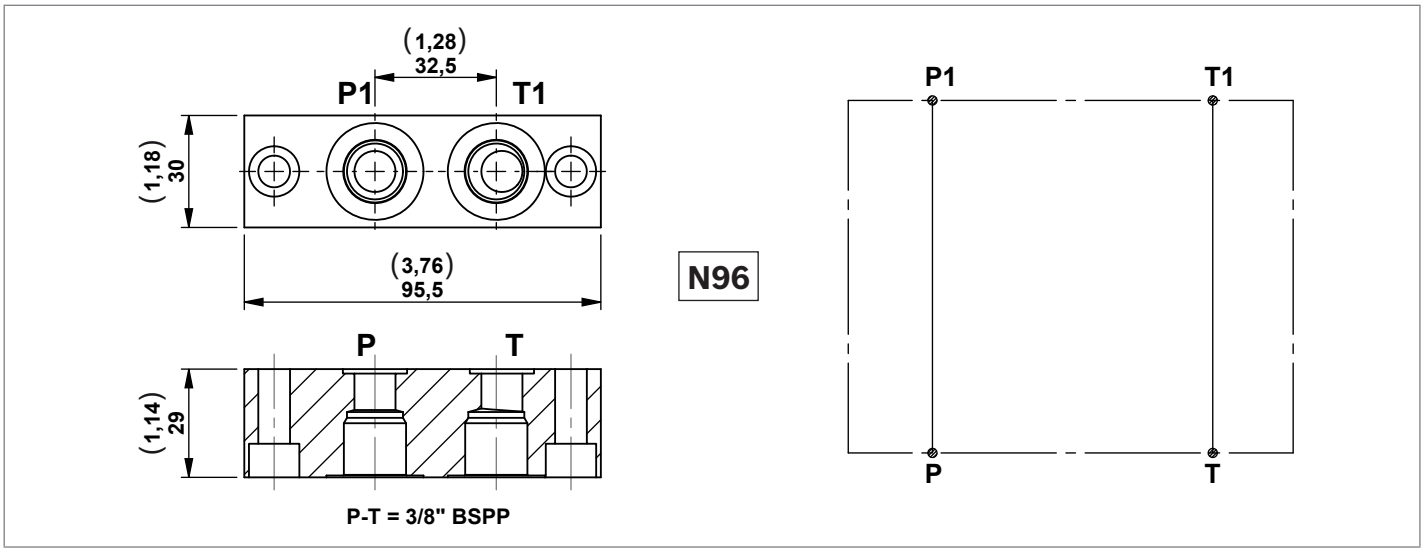

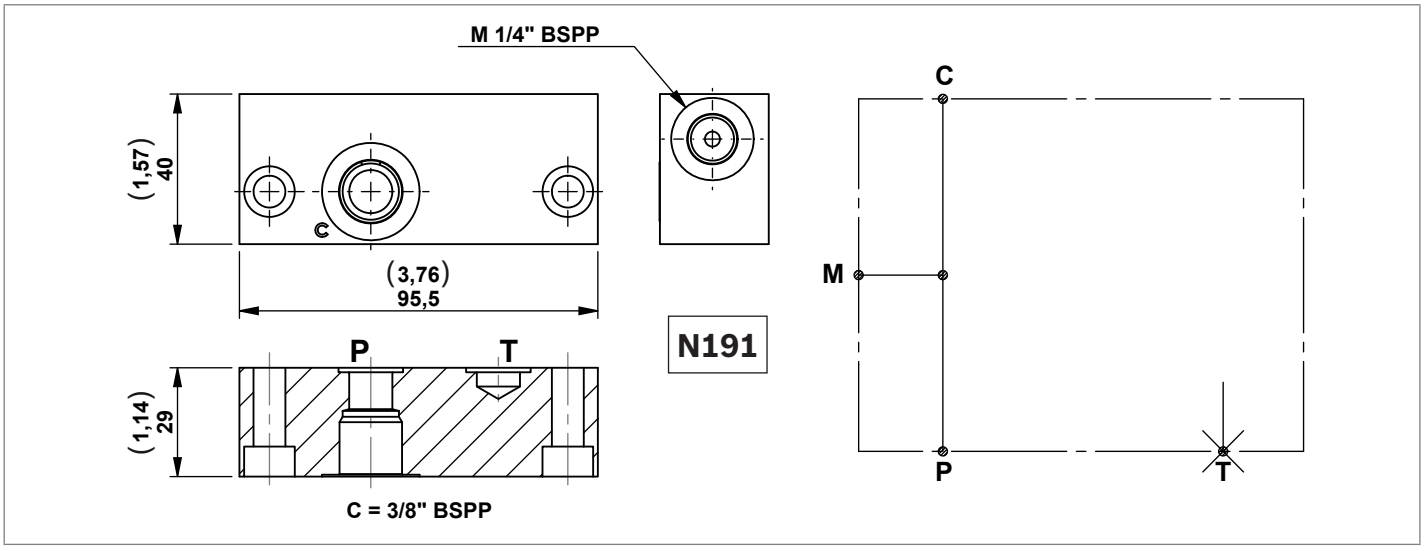

Code	Description	Max working pressure bar (psi)	Max flow l/min (gpm)	Type	Material number
N96	Modular block with threaded ports	300 (4351)	35 (9,25)	G386095000	R932001173
N191	Modular block with threaded ports	300 (4351)	35 (9,25)	G386191000	R932001284

Modular spacer block with extra “P1” port

A modular block with an extra port.

Each block includes 2 OR 2056 gaskets.

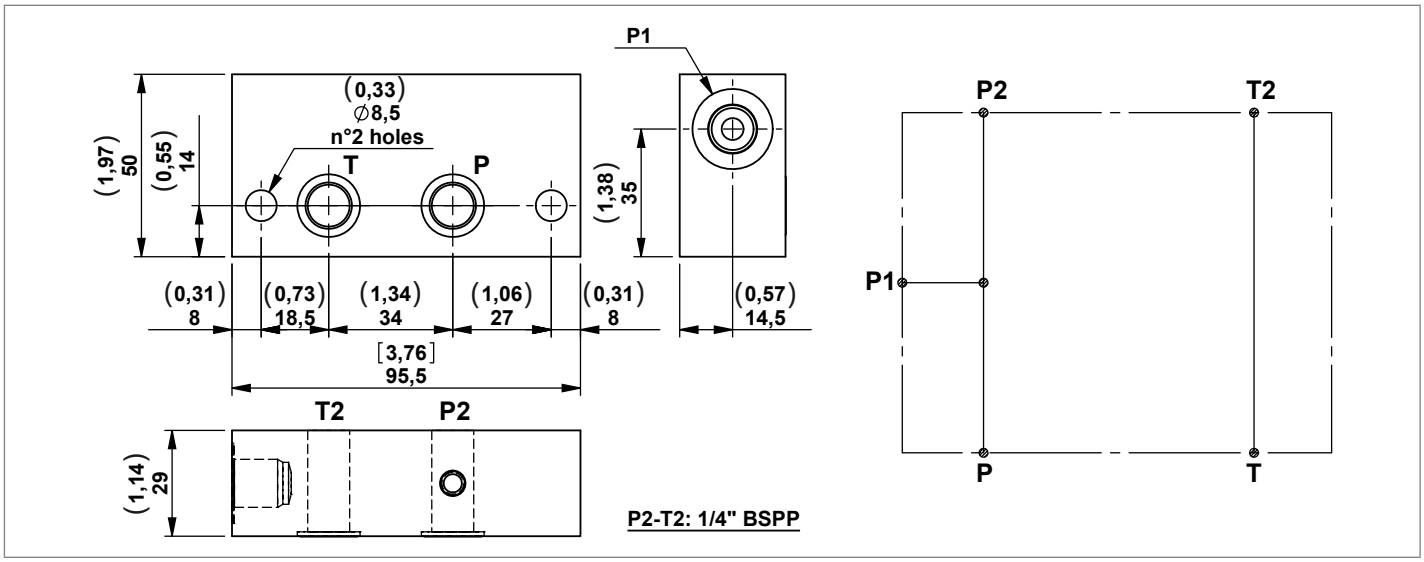

Code	Description	Max working pressure bar (psi)	Max flow l/min (gpm)	Type	Material number
N46-14	Modular spacer block with extra "P1" **port 1/4"** BSPP	300 (4351)	20 (5,28)	G386045000	R932001142
N46-38	Modular spacer block with extra "P1" **port 3/8"** BSPP	300 (4351)	20 (5,28)	1386000053	R932009506

Modular spacer block with two 1/8” BSPP and two 1/4” BSPP ports

A modular block with 4 extra ports.

Each block includes 2 OR 2056 gaskets.

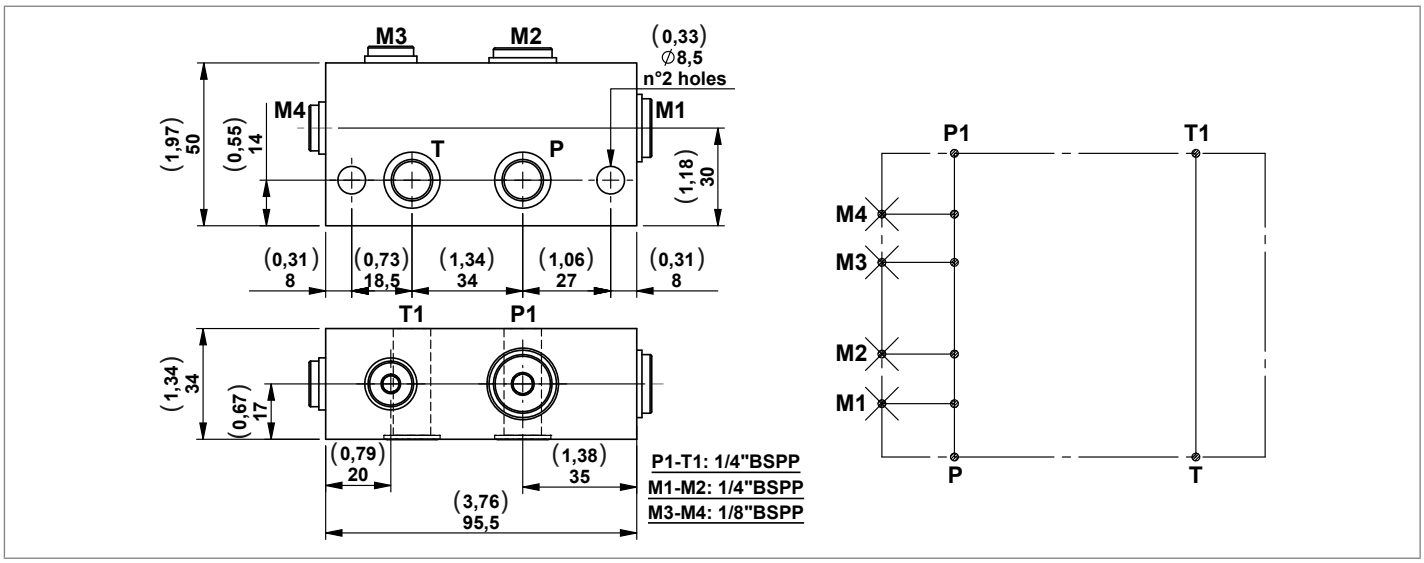

Code	Description	Max working pressure bar (psi)	Max flow l/min (gpm)	Type	Material number
N128	Modular spacer plock with two 1/8" BSPP ports and two 1/4" BSPP ports	300 (4351)	35 (9,25)	G386128000	R932001241

Dimensions [mm (inches)]

Modular block with filter on pressure line

A modular block with a filter on the pressure line. This is recommended for applications where valve may be subjected to contamination.
Each block includes 2 OR 2056 gaskets.

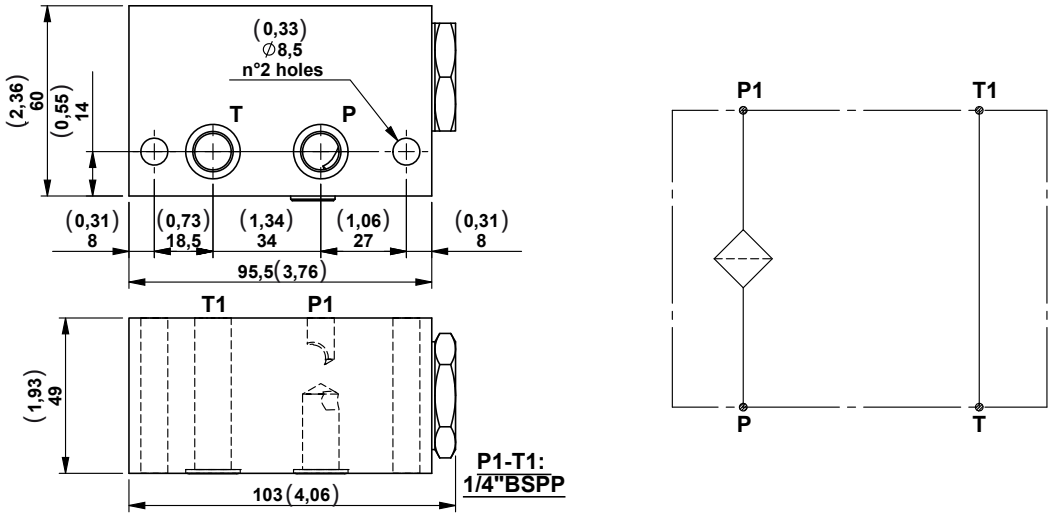

Code	Description	Max working pressure bar (psi)	Max flow l/min (gpm)	Type	Material number
N39-25	Modular block with filter (**25 micron**) on pressure line	230 (3336)	10 (2,64)	G386038010	R932001123
N39-60	Modular block with filter (**60 micron**) on pressure line	230 (3336)	10 (2,64)	G386038020	R932001124

Modular block with filter on the return line

A modular block with filter on return line. This is recommended for applications where valves may be subjected to contamination.
Each block includes 2 OR 2056 gaskets.
By-pass valve set at a pressure of 1 bar.

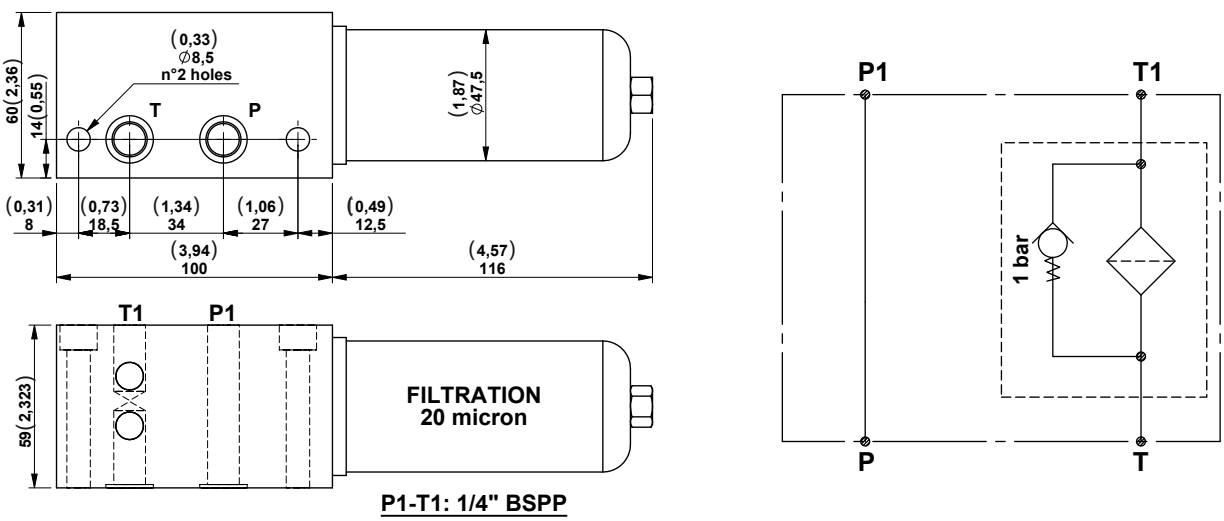

Code	Description	Max working pressure bar (psi)	Max flow l/min (gpm)	Type	Material number
N116	Modular block with filter on the return line (20 micron)	6 (87)	20 (5,28)	G386116010	R932001214

Modular block for CETOP 3 (2143) configuration valves

Modular blocks for CETOP 3 (2143) electrovalves for parallel or series circuits.

Each block includes 2 OR 2056 gaskets.

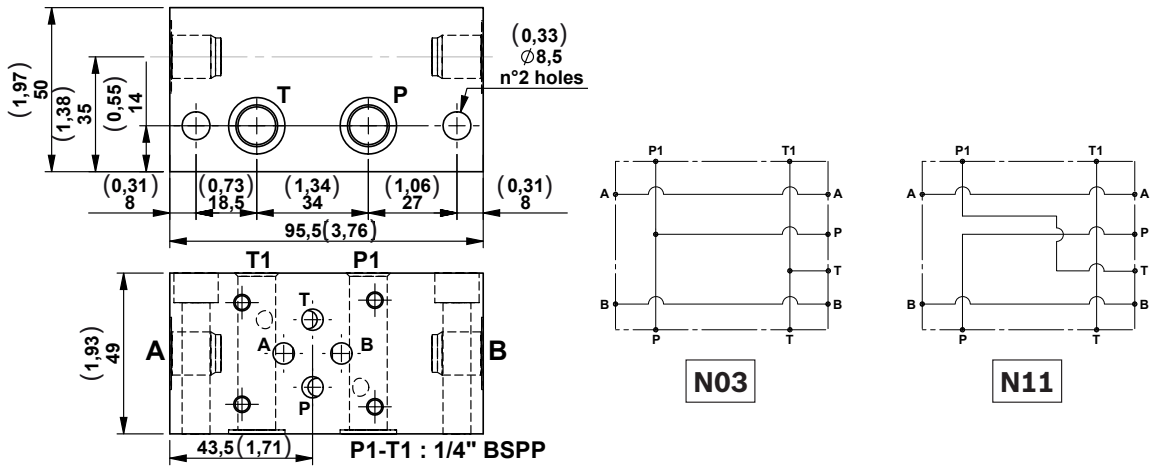

Code	Description	Max working pressure bar (psi)	Max flow l/min (gpm)	Type	Material number
N03-14	Modular block for CETOP3 (2143) configuration valves with A-B **1/4"** BSPP (**parallel circuit**)	300 (4351)	40 (10,57)	G386002010	R932001010
N03-38	Modular block for CETOP3 (2143) configuration valves with A-B **3/8"** BSPP (**parallel circuit**)	300 (4351)	40 (10,57)	G386002020	R932001011
N11-14	Modular block for CETOP3 (2143) configuration valves with A-B **1/4"** BSPP (**series circuit**)	300 (4351)	40 (10,57)	G386009010	R932001054
N11-38	Modular block for CETOP3 (2143) configuration valves with A-B **3/8"** BSPP (**series circuit**)	300 (4351)	40 (10,57)	G386009020	R932001056

Modular block for CETOP 3 (2143) configuration valves

A modular block that is for CETOP 3 (2143) electrovalves for a parallel circuit with ports on the oppsite side of the valve.

Each block includes 2 OR 2056 gaskets.

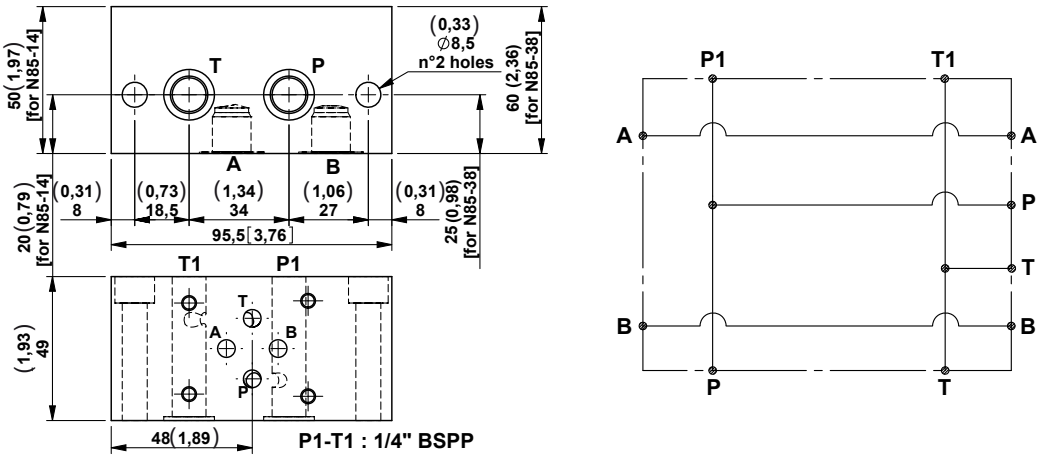

Code	Description	Max working pressure bar (psi)	Max flow l/min (gpm)	Type	Material number
N85-14	Modular block for CETOP3 (2143) configuration valves with A-B **1/4"** BSPP (parallel circuit)	300 (4351)	40 (10,57)	G386084010	R932001158
N85-38	Modular block for CETOP3 (2143) configuration valves with A-B **3/8"** BSPP (parallel circuit)	300 (4351)	40 (10,57)	G386084020	R932001159

Dimensions [mm (inches)]

Modular block for CETOP 3 (2143) configuration valves with side ports

A modular block that is for CETOP 3 (2143) electrovalves for parallel circuit with side device ports on one face.
Each block includes 2 OR 2056 gaskets.

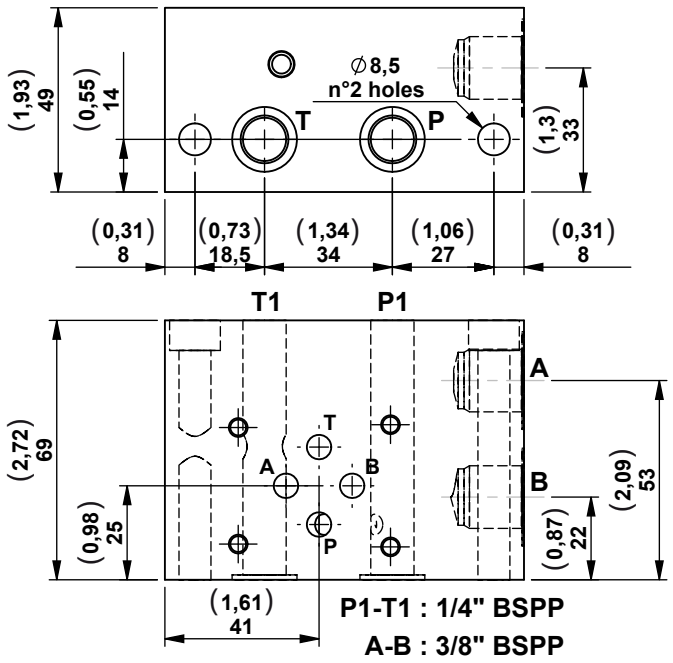

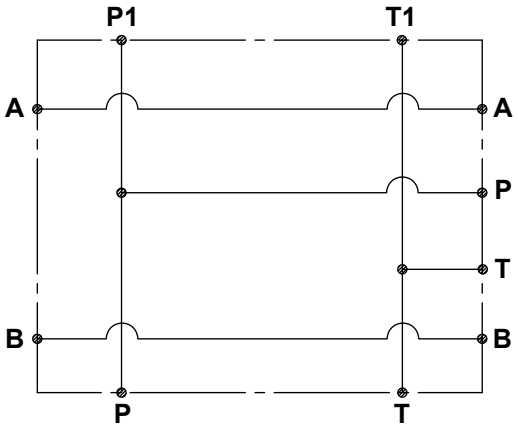

Code	Description	Max working pressure bar (psi)	Max flow l/min (gpm)	Type	Material number
N142	Modular block for CETOP 3 (2143) confuguration valves with side ports	300 (4351)	40 (10,57)	G386142000	R932001252

Modular block with poppet type P.O. check valves for CETOP 3 (2143) configuration valves (parallel circuit)

A selection of modular block with P.O. check valves for block CETOP 3 (2143) electrovalves.

Each block includes 2 OR 2056 gaskets.

Possibility to have an OR gasket on the piloting piston for application with low flow.

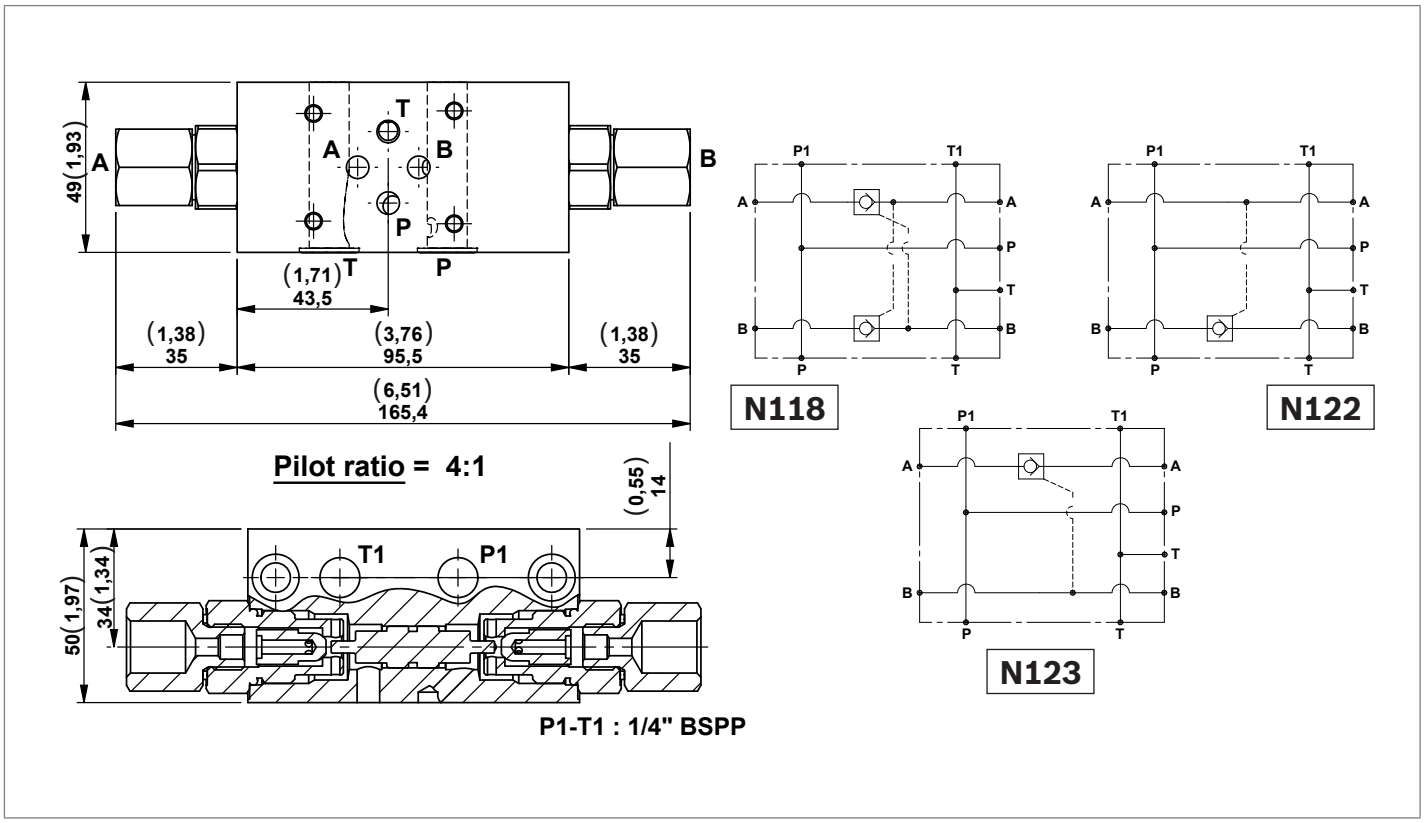

Code	Description	Max working pressure bar (psi)	Max flow l/min (gpm)	Type	Material number
N118-38	Modular block with poppet type P.O. check valves on A-B for CETOP 3 (2143) configuration valves (**without O-ring** on pilot piston and A-B **3/8"** BSPP)	300 (4351)	20 (5,28)	G386118A02	R932001217
N118G-38	Modular block with poppet type P.O. check valves on A-B for CETOP 3 (2143) configuration valves (**with O-ring** on pilot piston and A-B **3/8"** BSPP)	300 (4351)	20 (5,28)	G386118B02	R932001222
N118-14	Modular block with poppet type P.O. check valves on A-B for CETOP 3 (2143) configuration valves (**without O-ring** on pilot piston and A-B **1/4"** BSPP)	300 (4351)	20 (5,28)	G386118A03	R932001218
N118G-14	Modular block with poppet type P.O. check valves on A-B for CETOP 3 (2143) configuration valves (**with O-ring** on pilot piston and A-B **1/4"** BSPP)	300 (4351)	20 (5,28)	G386118B03	R932001223
N122-38	Modular block with poppet type P.O. check valve on B for CETOP 3 (2143) configuration valves (**without O-ring** on pilot piston and A-B **3/8"** BSPP)	300 (4351)	20 (5,28)	G386122A02	R932001233
N122-14	Modular block with poppet type P.O. check valve on B for CETOP 3 (2143) configuration valves (**without O-ring** on pilot piston and A-B **1/4"** BSPP)	300 (4351)	20 (5,28)	G386122A01	R932001232
N123-38	Modular block with poppet type P.O. check valves on A for CETOP 3 (2143) configuration valves (**without O-ring** on pilot piston and A-B **3/8"** BSPP)	300 (4351)	20 (5,28)	G386123A02	R932001237
N123-14	Modular block with poppet type P.O. check valves on A for CETOP 3 (2143) configuration valves (**without O-ring** on pilot piston and A-B **1/4"** BSPP)	300 (4351)	20 (5,28)	G386123A01	R932001236

Sandwich blocks with poppet type “VM25“ relief valves for CETOP 3 (2143) configuration valves

Each block includes 4 OR 108 gaskets.

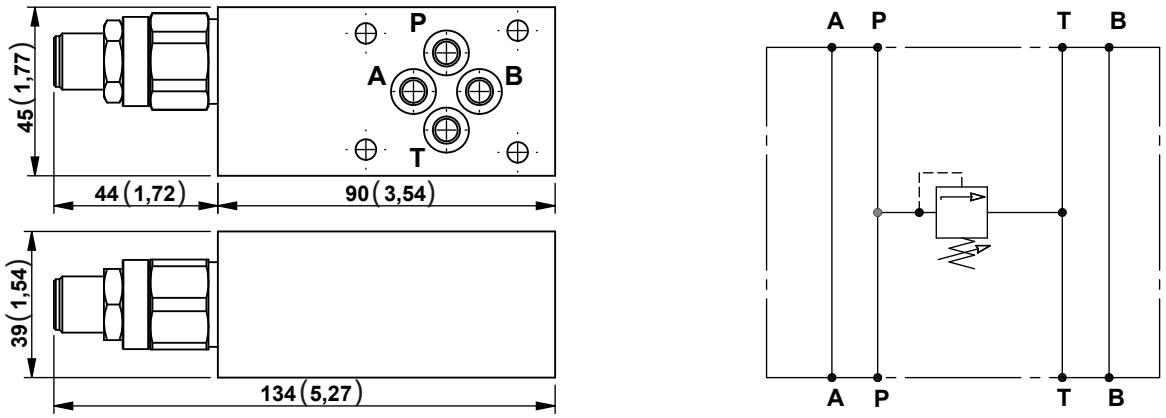

Code	Description	Max working pressure bar (psi)	Max flow l/min (gpm)	Type	Material number
N99-10	Sandwich block with poppet type "VM25" relief valve P in T (**10-100 bar**) for CETOP3 (2143) configuration valves	300 (4351)	25 (6,60)	G386098A81	R932001174
N99-20	Sandwich block with poppet type "VM25" relief valve P in T (**40-200 bar**) for CETOP3 (2143) configuration valves	300 (4351)	25 (6,60)	G386098A82	R932001175
N99-35	Sandwich block with poppet type "VM25" relief valve P in T (**70-350 bar**) for CETOP3 (2143) configuration valves	300 (4351)	25 (6,60)	G386098A83	R932001176

Sandwich blocks with poppet type “VM25“ relief valves for CETOP 3 (2143) configuration valves

Each block includes 4 OR 108 gaskets.

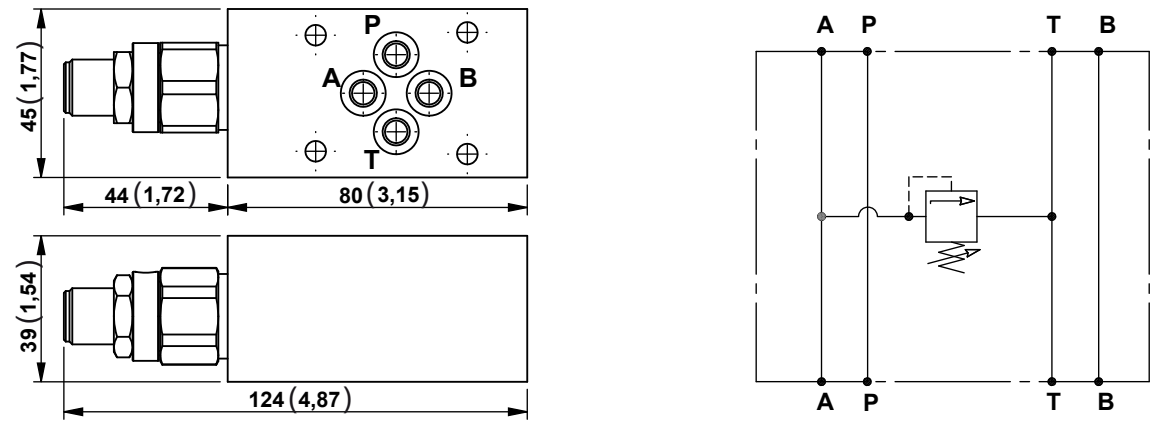

Code	Description	Max working pressure bar (psi)	Max flow l/min (gpm)	Type	Material number
N100-05	Sandwich block with poppet type "VM25" relief valve A in T (**5-50 bar**) for CETOP3 (2143) configuration valves	300 (4351)	25 (6,60)	G386099A84	R932001183
N100-10	Sandwich block with poppet type "VM25" relief valve A in T (**10-100 bar**) for CETOP3 (2143) configuration valves	300 (4351)	25 (6,60)	G386099A81	R932001180
N100-20	Sandwich block with poppet type "VM25" relief valve A in T (**40-200 bar**) for CETOP3 (2143) configuration valves	300 (4351)	25 (6,60)	G386099A82	R932001181
N100-35	Sandwich block with poppet type "VM25" relief valve A in T (**70-350 bar**) for CETOP3 (2143) configuration valves	300 (4351)	25 (6,60)	G386099A83	R932001182

Sandwich blocks with poppet type “VM25“ relief valves for CETOP 3 (2143) configuration valves

Each block includes 4 OR 108 gaskets.

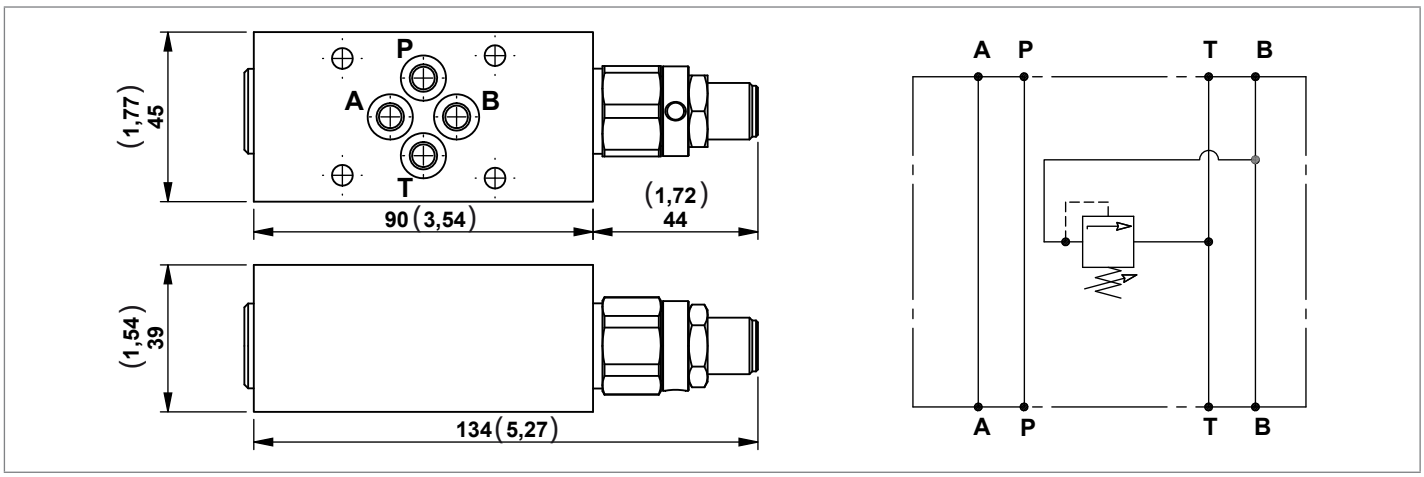

Code	Description	Max working pressure bar (psi)	Max flow l/min (gpm)	Type	Material number
N101-05	Sandwich block with poppet type "VM25" relief valve B in T (**5-50 bar**) for CETOP3 (2143) configuration valves	300 (4351)	25 (6,60)	G386101A84	R932001191
N101-10	Sandwich block with poppet type "VM25" relief valve B in T (**10-100 bar**) for CETOP3 (2143) configuration valves	300 (4351)	25 (6,60)	G386101A81	R932001188
N101-20	Sandwich block with poppet type "VM25" relief valve B in T (**40-200 bar**) for CETOP3 (2143) configuration valves	300 (4351)	25 (6,60)	G386101A82	R932001189
N101-35	Sandwich block with poppet type "VM25" relief valve B in T (**70-350 bar**) for CETOP3 (2143) configuration valves	300 (4351)	25 (6,60)	G386101A83	R932001190

Sandwich blocks with poppet type “VM25“ relief valves for CETOP 3 (2143) configuration valves

Each block includes 4 OR 108 gaskets.

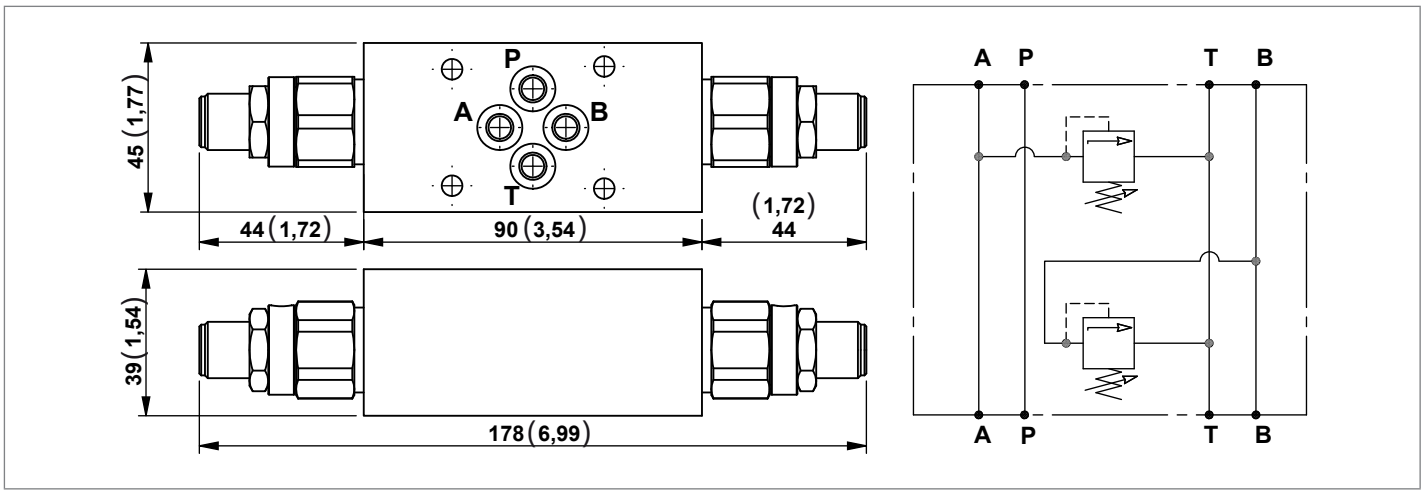

Code	Description	Max working pressure bar (psi)	Max flow l/min (gpm)	Type	Material number
N102-05	Sandwich block with poppet type "VM25" relief valves A-B in T (**5-50 bar**) for CETOP3 (2143) configuration valves	300 (4351)	25 (6,60)	G386102A84	R932001200
N102-10	Sandwich block with poppet type "VM25" relief valves A-B in T (**10-100 bar**) for CETOP3 (2143) configuration valves	300 (4351)	25 (6,60)	G386102A81	R932001196
N102-20	Sandwich block with poppet type "VM25" relief valves A-B in T (**40-200 bar**) for CETOP3 (2143) configuration valves	300 (4351)	25 (6,60)	G386102A82	R932001198
N102-35	Sandwich block with poppet type "VM25" relief valves A-B in T (**70-350 bar**) for CETOP3 (2143) configuration valves	300 (4351)	25 (6,60)	G386102A83	R932001199

Dimensions [mm (inches)]

Sandwich blocks with poppet type “VM25“ relief valves for CETOP 3 (2143) configuration valves

Each block includes 4 OR 108 gaskets.

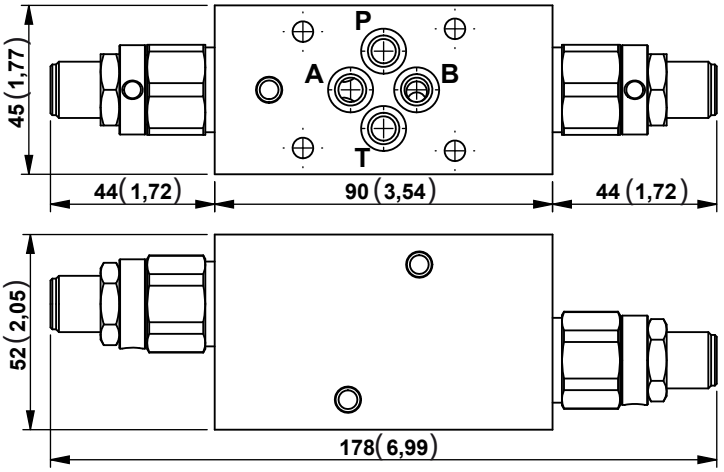

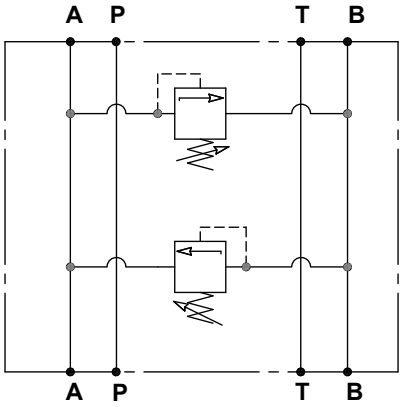

Code	Description	Max working pressure bar (psi)	Max flow l/min (gpm)	Type	Material number
N103-10	Sandwich block with poppet type "VM25" relief valves A in B and B in A (**10-100 bar**) for CETOP3 (2143) configuration valves	300 (4351)	25 (6,60)	G386103A81	R932001202
N103-20	Sandwich block with poppet type "VM25" relief valves A in B and B in A (**40-200 bar**) for CETOP3 (2143) configuration valves	300 (4351)	25 (6,60)	G386103A82	R932001203
N103-35	Sandwich block with poppet type "VM25" relief valves A in B and B in A (**70-350 bar**) for CETOP3 (2143) configuration valves	300 (4351)	25 (6,60)	G386103A83	R932001204

Sandwich blocks with “ST-CU-06” adjustable flow control valves for CETOP 3 (2143) configuration valves

Each block includes 4 OR 108 gaskets.

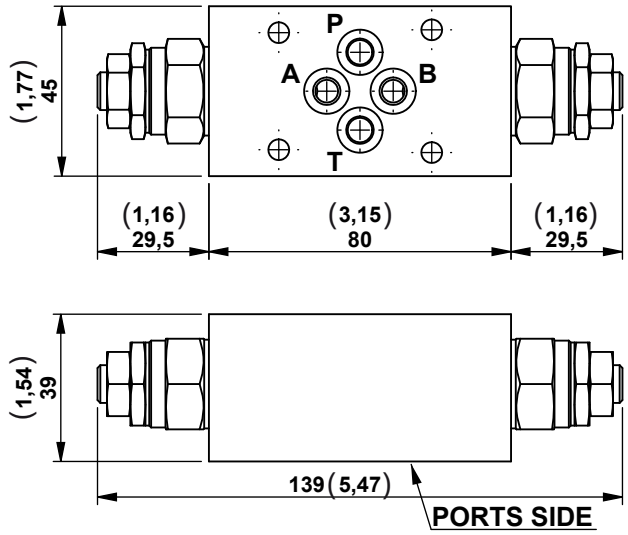

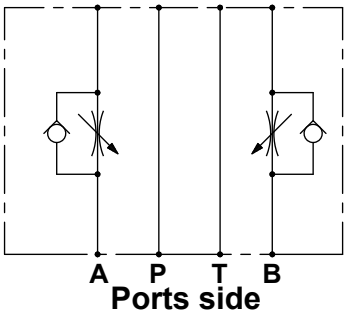

N78

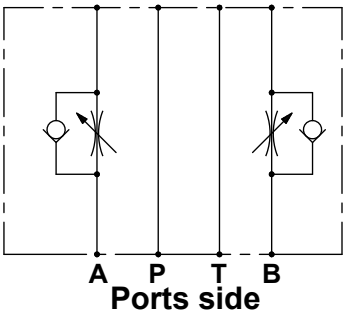

N104

Code	Description	Max working pressure bar (psi)	Max flow l/min (gpm)	Type	Material number
N78	Sandwich blocks with ST-CU-06 adjustable flow control valves (that **working on the return to the tank** of the A and B line) for CETOP 3 (2143) configuration valves	300 (4351)	25 (6,60)	G386077A81	R932001156
N104	Sandwich blocks with ST-CU-06 adjustable flow control valves (that **working on the delivery** of the A and B line) for CETOP 3 (2143) configuration valves	300 (4351)	25 (6,60)	G386104A80	R932001205

Sandwich blocks with “ST-CU-06” adjustable flow control valves for CETOP 3 (2143) configuration valves

Each block includes 4 OR 108 gaskets.

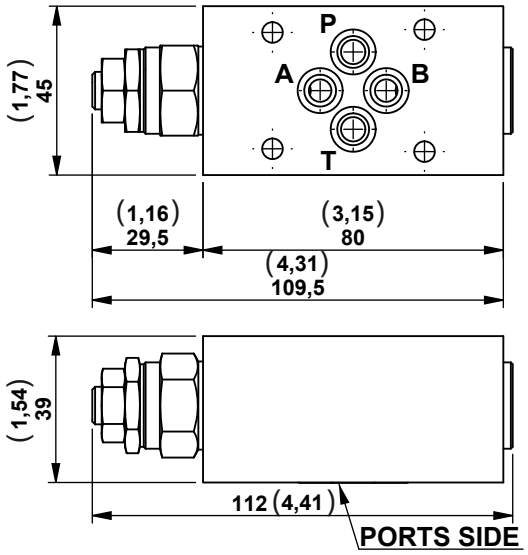

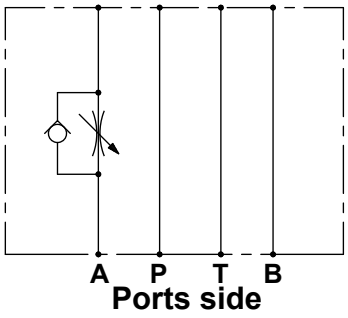

N105

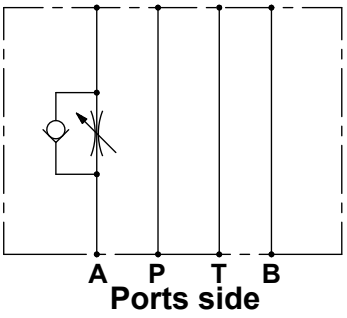

N107

Code	Description	Max working pressure bar (psi)	Max flow l/min (gpm)	Type	Material number
N105	Sandwich blocks with ST-CU-06 adjustable flow control valves (that **working on the return to the tank** of the A line) for CETOP 3 (2143) configuration valves	300 (4351)	25 (6,60)	G386105A81	R932000183
N107	Sandwich blocks with ST-CU-06 adjustable flow control valves (that **working on the delivery** of the A line) for CETOP 3 (2143) configuration valves	300 (4351)	25 (6,60)	G386107A80	R932001211

Sandwich blocks with “ST-CU-06” adjustable flow control valves for CETOP 3 (2143) configuration valves

Each block includes 4 OR 108 gaskets.

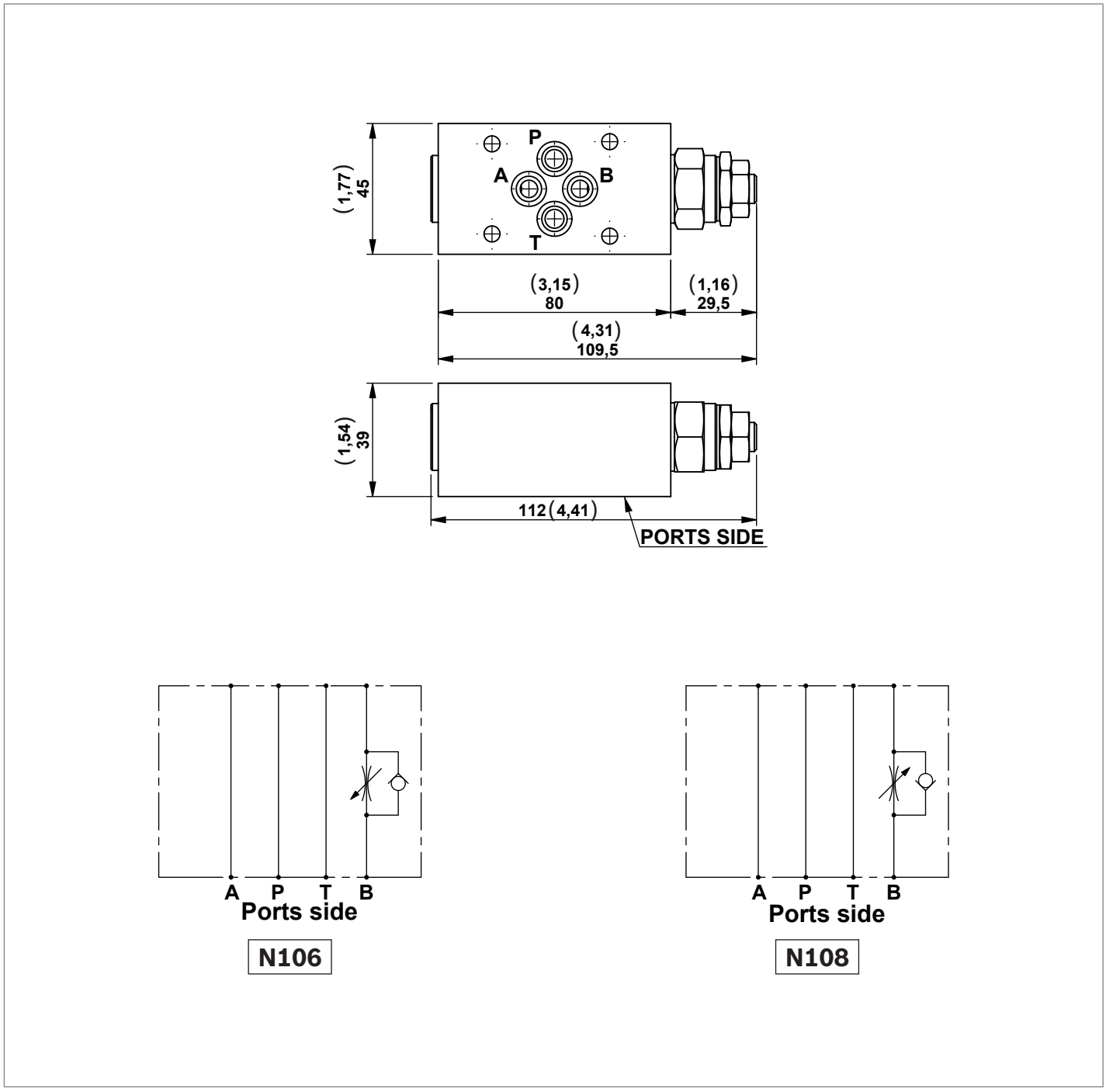

Code	Description	Max working pressure bar (psi)	Max flow l/min (gpm)	Type	Material number
N106	Sandwich blocks with ST-CU-06 adjustable flow control valves (that **working on the return to the tank** of the B line) for CETOP 3 (2143) configuration valves	300 (4351)	25 (6,60)	G386106A81	R932000184
N108	Sandwich blocks with ST-CU-06 adjustable flow control valves (that **working on the delivery** of the B line) for CETOP 3 (2143) configuration valves	300 (4351)	25 (6,60)	G386108A80	R932001212

Dimensions [mm (inches)]

Sandwich block with ports on “A” and “B” line for CETOP 3 (2143) configuration valves

Each block includes 2 OR 2056 gaskets.

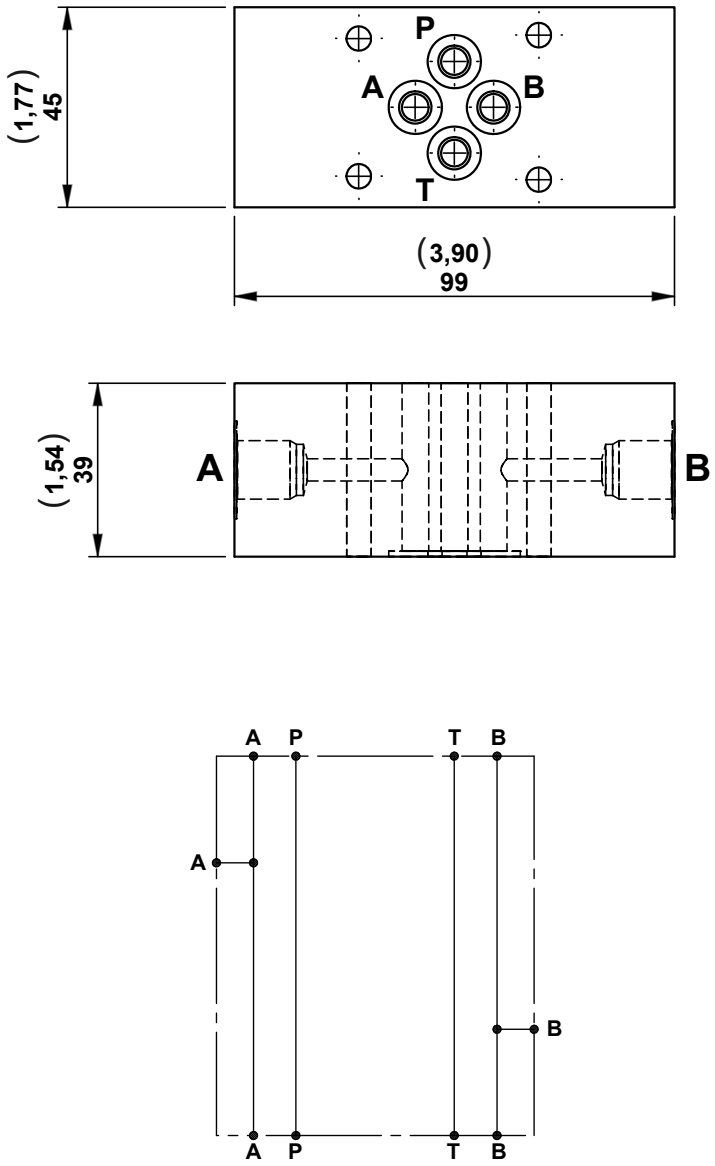

Code	Description	Max working pressure bar (psi)	Max flow l/min (gpm)	Type	Material number
N19-14	Sandwich block with **1/4"** BSPP ports on A and B line for CETOP3 (2143) configuration valves	300 (4351)	25 (6,60)	G386018010	R932001091

Sandwich blocks with overcenter valves for CETOP 3 (2143) configuration valves

Each block includes 4 OR 108 gaskets.

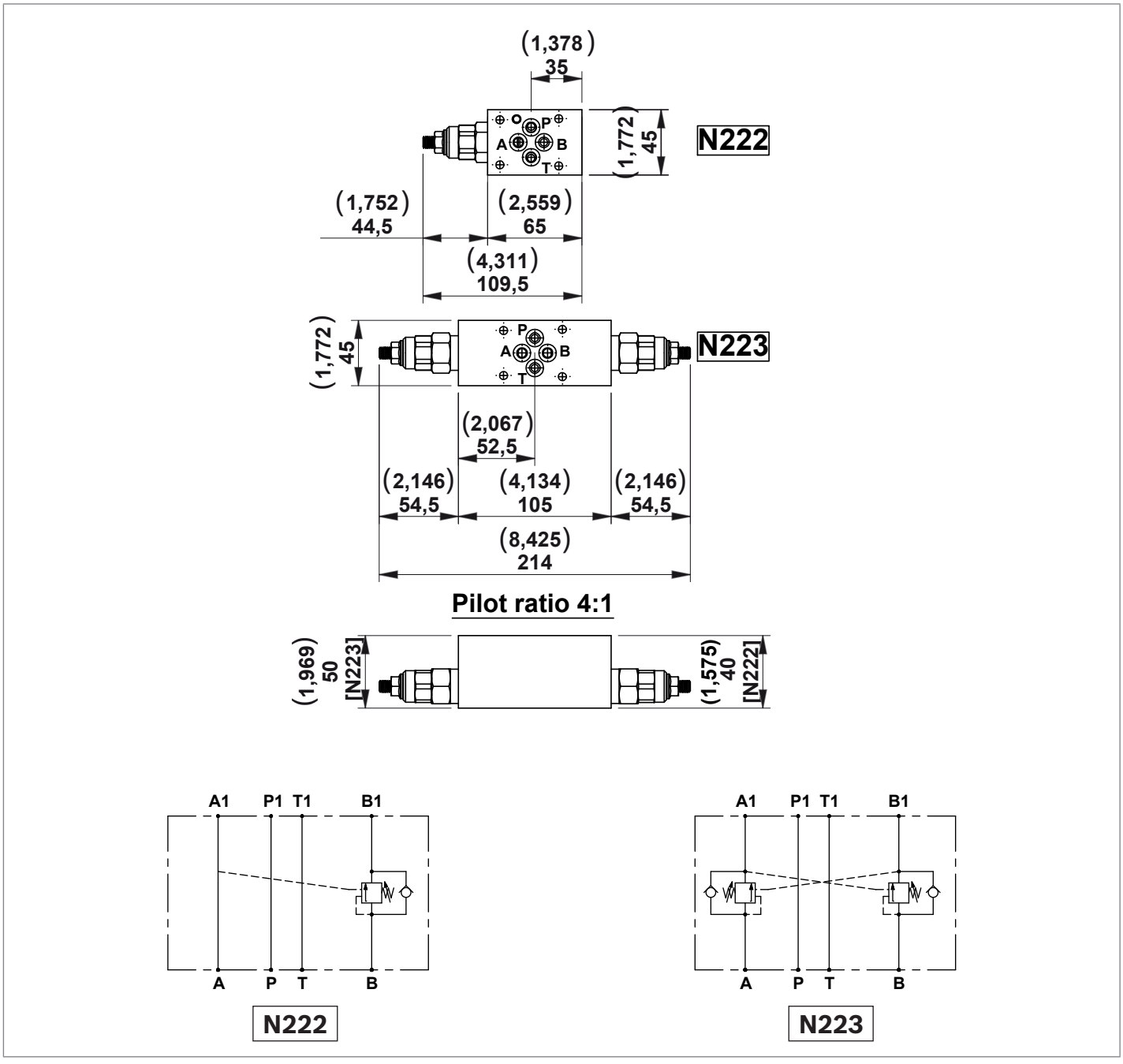

Code	Description	Max working pressure bar (psi)	Max flow l/min (gpm)	Type	Material number
N222.20	Sandwich block with Overcentre valve VBSN-08AA (**100-210 bar**) **on B** line for CETOP3	300 (4351)	30 (7,93)	G386222002	R932001326
N222.35	Sandwich block with Overcentre valve VBSN-08AA (**200-350 bar**) **on B** line for CETOP3	300 (4351)	30 (7,93)	G386222003	R932001327
N223.20	Sandwich block with Overcentre valves VBSN-08AA (**100-210 bar**) **on A and B** line for CETOP3	300 (4351)	30 (7,93)	G386223002	R932001329
N223.35	Sandwich block with Overcentre valves VBSN-08AA (**200-350 bar**) **on A and B** line for CETOP3	300 (4351)	30 (7,93)	G386223003	R932001330

Dimensions [mm (inches)]

Block with pilot operated check valves on A and B line, only for manifolds KE type code M21-M25

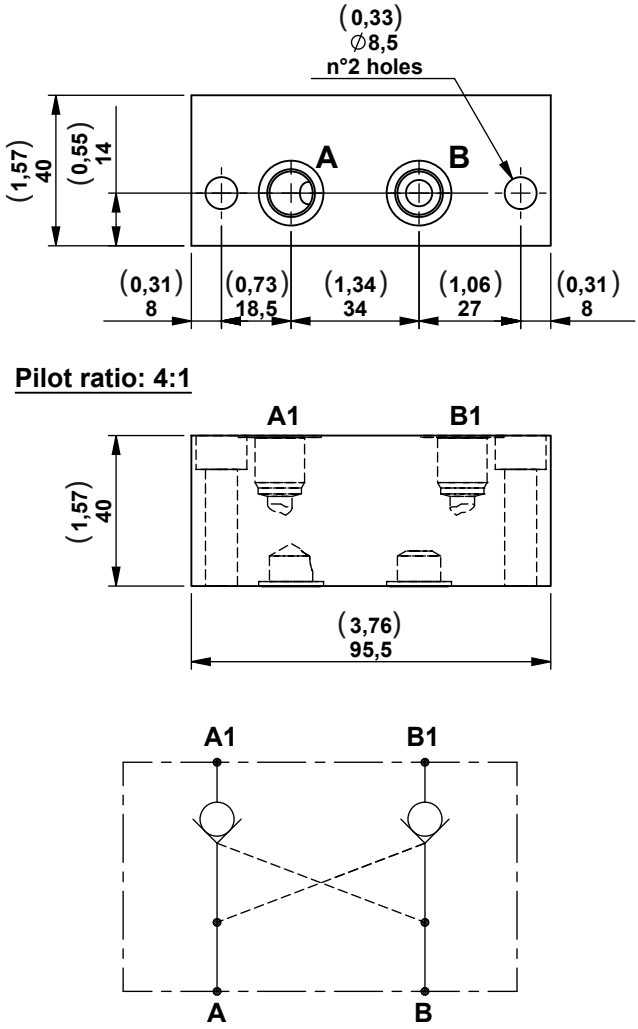

Code	Description	Max working pressure bar (psi)	Max flow l/min (gpm)	Type	Material number
N221-14	Block with pilot operated check valves with ports A1-B1 **1/4" BSPP**	210 (3046)	12 (3,17)	G386221001	R932001325
N221-916	Block with pilot operated check valves with ports A1-B1 **SAE 9/16"**	210 (3046)	12 (3,17)	G386221000	R932001324

Modular hand pump manifold block

A single acting hand pump usually used for emergency.

Each block includes 5 OR 2050 gaskets.

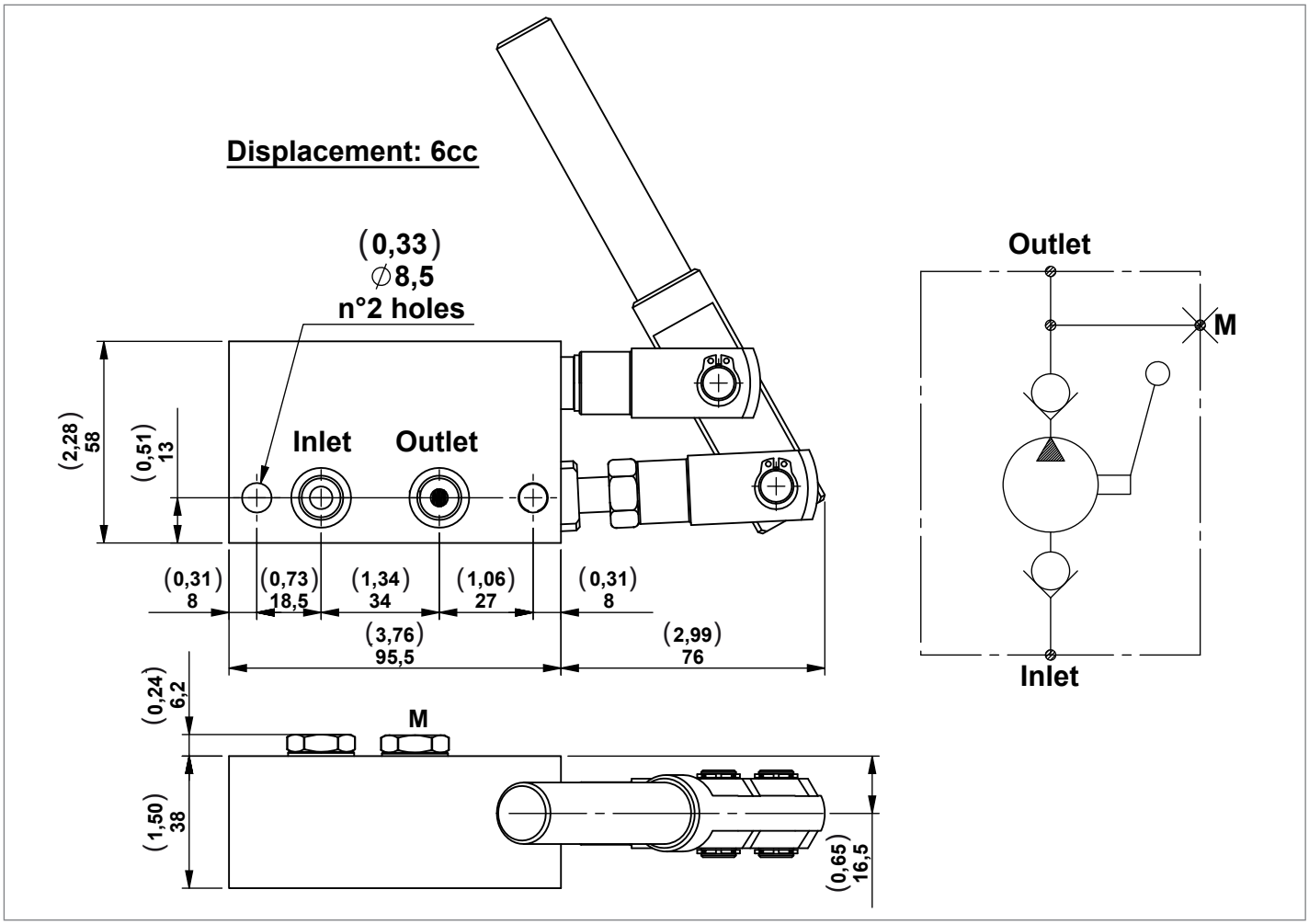

Code	Description	Max working pressure bar (psi)	Max flow l/min (gpm)	Type	Material number
N22	Modular hand pump manifold block	350 (5076)	-	G386021010	R932001093

Lever Kit

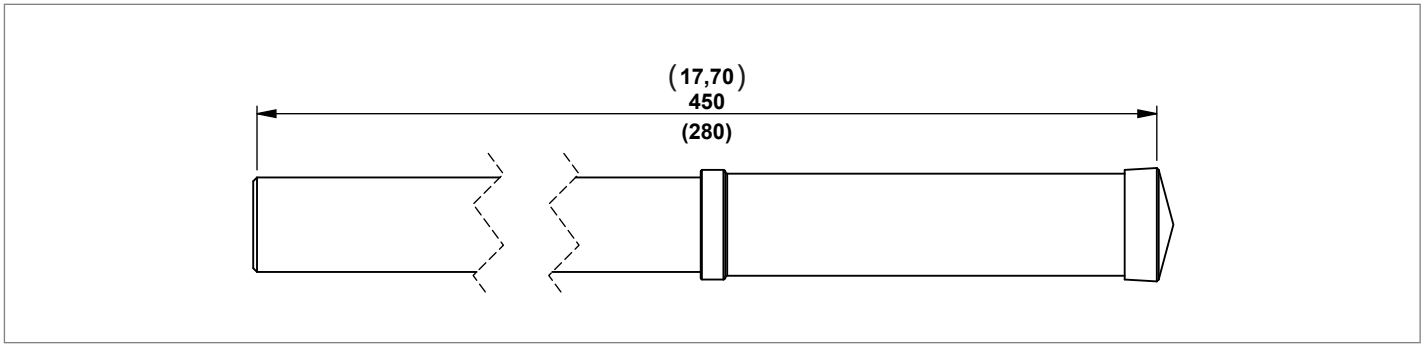

Description	Type	Material number
Lever L= 450	K250133000	R932002452
Lever L= 280	K2501S1058	R932002407

CETOP 2143 [Ø6mm (0,24inch)] Solenoid Valves

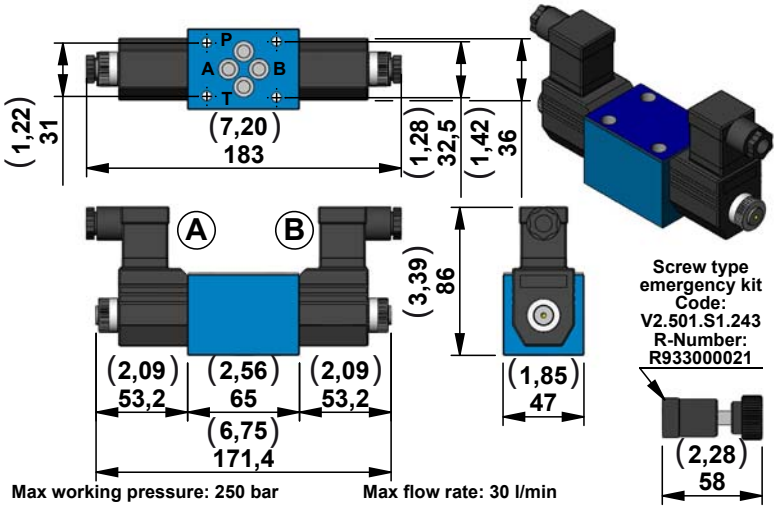

Code	Description	Max working pressure bar (psi)	Max flow l/min (gpm)	Material number	Diagram
E02Z-OB	CETOP3 solenoid valve 12V D.C.	250 (3626)	30 (7,92)	R933004275	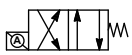
E02Z-OC	CETOP3 solenoid valve 24V D.C.	250 (3626)	30 (7,92)	R933004277	
E02Z-OV	CETOP3 solenoid valve 24V RAC	250 (3626)	30 (7,92)	R933004279	
E02Z-OZ	CETOP3 solenoid valve 220V RAC	250 (3626)	30 (7,92)	R933004281	
E06Z-OB	CETOP3 solenoid valve 12V D.C.	250 (3626)	30 (7,92)	R933004096	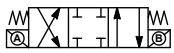
E06Z-OC	CETOP3 solenoid valve 24V D.C.	250 (3626)	30 (7,92)	R933004098	
E06Z-OD	CETOP3 solenoid valve 48V D.C.	250 (3626)	30 (7,92)	R933007830	
E06Z-OV	CETOP3 solenoid valve 24V RAC	250 (3626)	30 (7,92)	R933004102	
E06Z-OW	CETOP3 solenoid valve 110V RAC	250 (3626)	30 (7,92)	R933004103	
E06Z-OZ	CETOP3 solenoid valve 220V RAC	250 (3626)	30 (7,92)	R933004104	
E07Z-OB	CETOP3 solenoid valve 12V D.C.	250 (3626)	30 (7,92)	R933004131	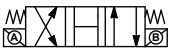
E07Z-OC	CETOP3 solenoid valve 24V D.C.	250 (3626)	30 (7,92)	R933004133	
E07Z-OD	CETOP3 solenoid valve 48V D.C.	250 (3626)	30 (7,92)	R933004135	
E07Z-OV	CETOP3 solenoid valve 24V RAC	250 (3626)	30 (7,92)	R933004136	
E07Z-OW	CETOP3 solenoid valve 110V RAC	250 (3626)	30 (7,92)	R933004137	
E07Z-OZ	CETOP3 solenoid valve 220V RAC	250 (3626)	30 (7,92)	R933004138	
E08Z-OB	CETOP3 solenoid valve 12V D.C.	250 (3626)	30 (7,92)	R933004191	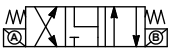
E08Z-OC	CETOP3 solenoid valve 24V D.C.	250 (3626)	30 (7,92)	R933004193	
E08Z-OD	CETOP3 solenoid valve 48V D.C.	250 (3626)	30 (7,92)	R933004197	
E08Z-OV	CETOP3 solenoid valve 24V RAC	250 (3626)	30 (7,92)	R933004198	
E08Z-OW	CETOP3 solenoid valve 110V RAC	250 (3626)	30 (7,92)	R933004199	
E08Z-OZ	CETOP3 solenoid valve 220V RAC	250 (3626)	30 (7,92)	R933004200	
E10Z-OB	CETOP3 solenoid valve 12V D.C.	250 (3626)	30 (7,92)	R933004057	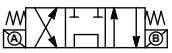
E10Z-OC	CETOP3 solenoid valve 24V D.C.	250 (3626)	30 (7,92)	R933004061	
E10Z-OD	CETOP3 solenoid valve 48V D.C.	250 (3626)	30 (7,92)	R933004063	
E10Z-OV	CETOP3 solenoid valve 24V RAC	250 (3626)	30 (7,92)	R933004065	
E10Z-OW	CETOP3 solenoid valve 110V RAC	250 (3626)	30 (7,92)	R933004067	
E10Z-OZ	CETOP3 solenoid valve 220V RAC	250 (3626)	30 (7,92)	R933004068	

Design

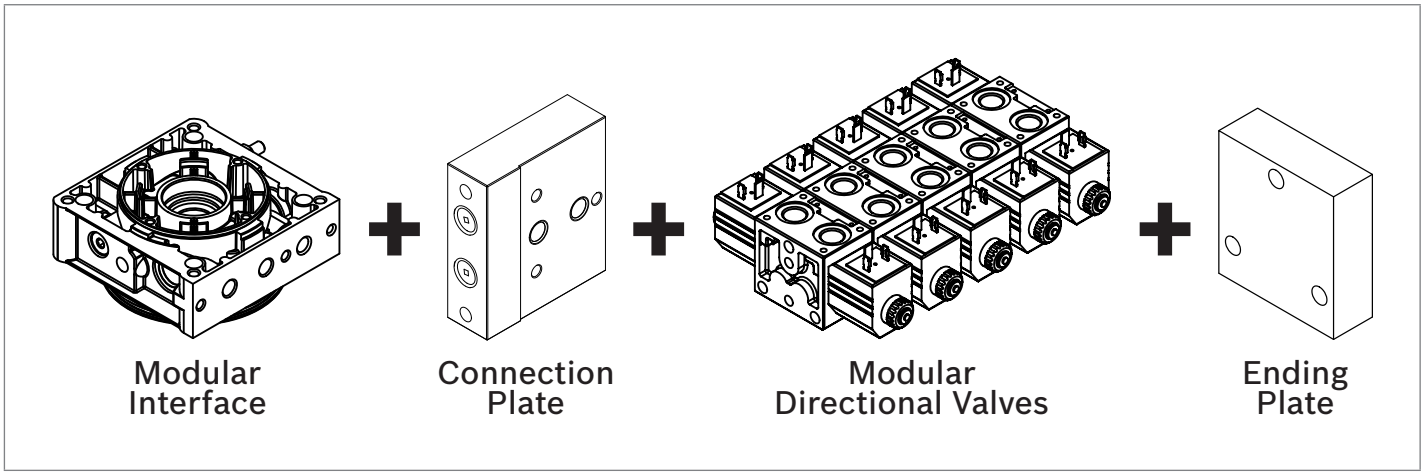

Horizontal Example

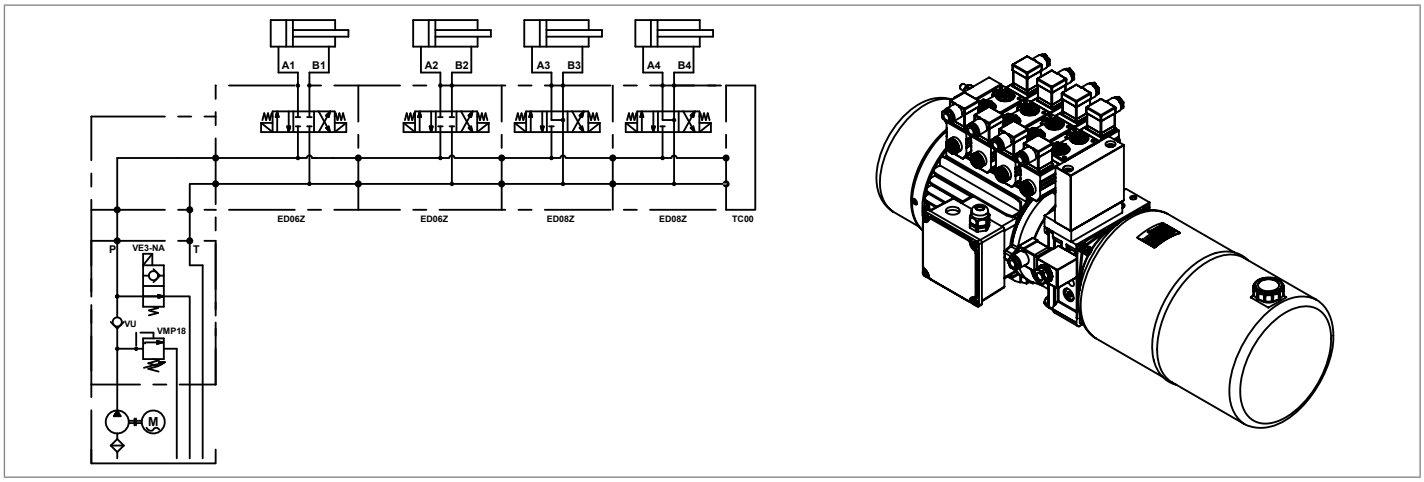

CETOP 2143 [Ø6mm (0,24inch)] Solenoid Valves

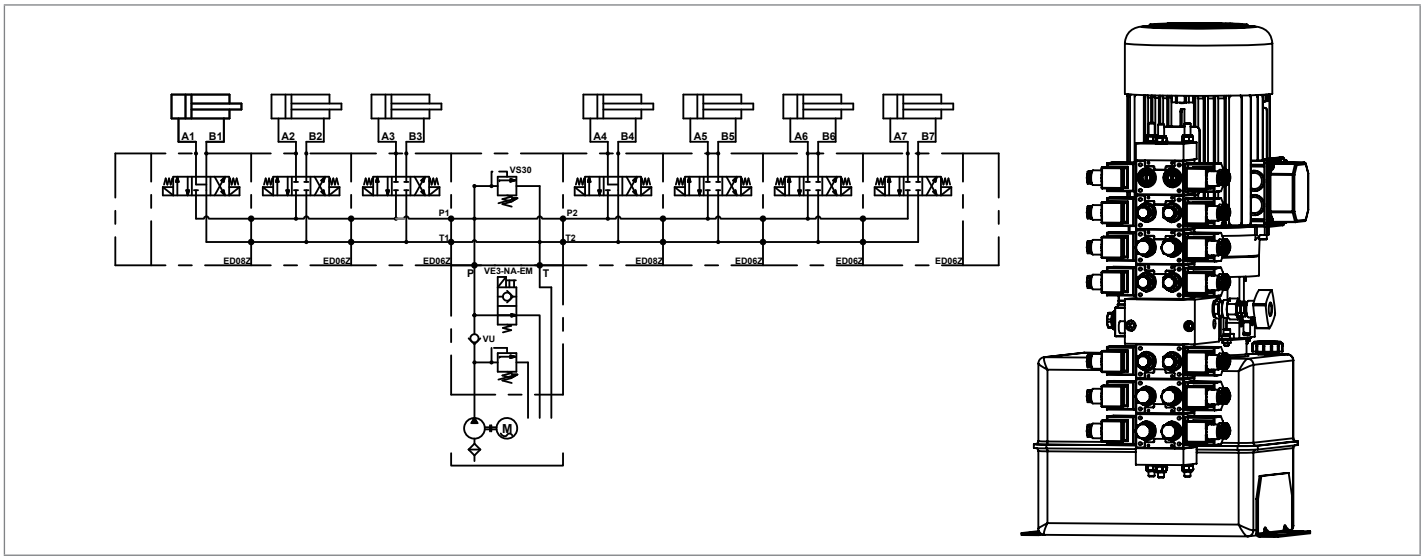

Note
Please contact our Sales Department for further information.

Dimensions [mm (inches)]

Modular blocks with two lowering solenoid valves, check valves, and compensated flow control throttle valves (available upon request)

Modular blocks to operate a single acting cylinder in a parallel circuit or a double acting cylinder in regenerative.
Each block includes 2 OR 2056 gaskets.
Minimum voltage required: 90% of nominal.
Coils not included, must be ordered separately.
For the selection of coil model and voltage please refer to page 72.
For the selection of connectors please refer to page 75.

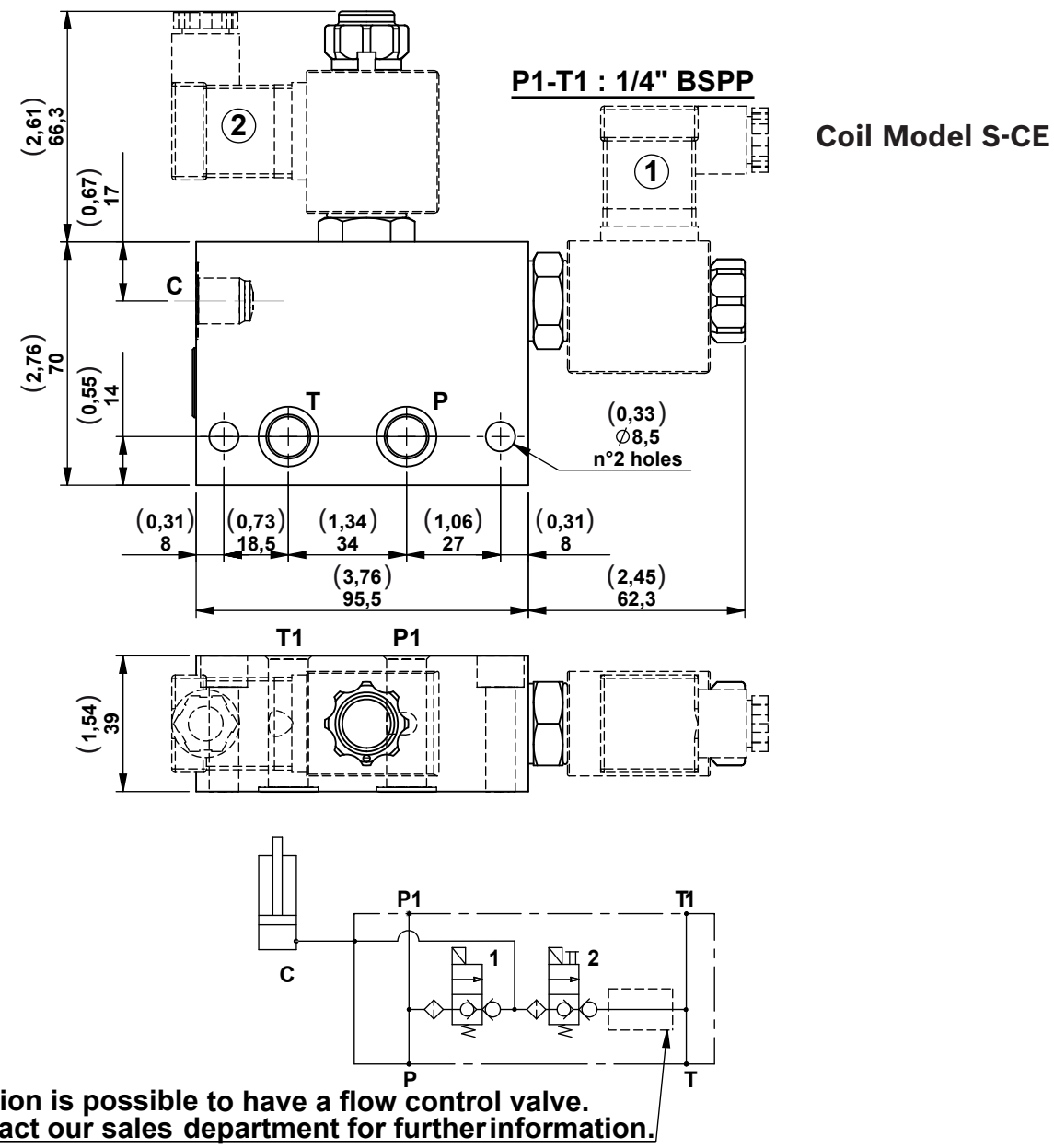

Code	Description	Max working pressure bar (psi)	Max flow l/min (gpm)	Type	Material number
V07-14	Modular block with 2 VE3-NC-VU with "C" port **1/4"** BSPP	250 (3626)	25 (6,60)	G386507010DC	R932001406
V07-38	Modular block with 2 VE3-NC-VU with "C" port **3/8"** BSPP	250 (3626)	25 (6,60)	G386507020DC	R932009707

Modular blocks with four way three position solenoid valve. Spool type

A selection of modular blocks with 4/3 spool type solenoid valve for small double acting cylinders.

Each block includes 2 OR 2056 gaskets.

Minimum voltage required: 90% of nominal.

Coils not included, must be ordered separately.

For the selection of coil model and voltage please refer to page 72.

For the selection of connectors please refer to page 75.

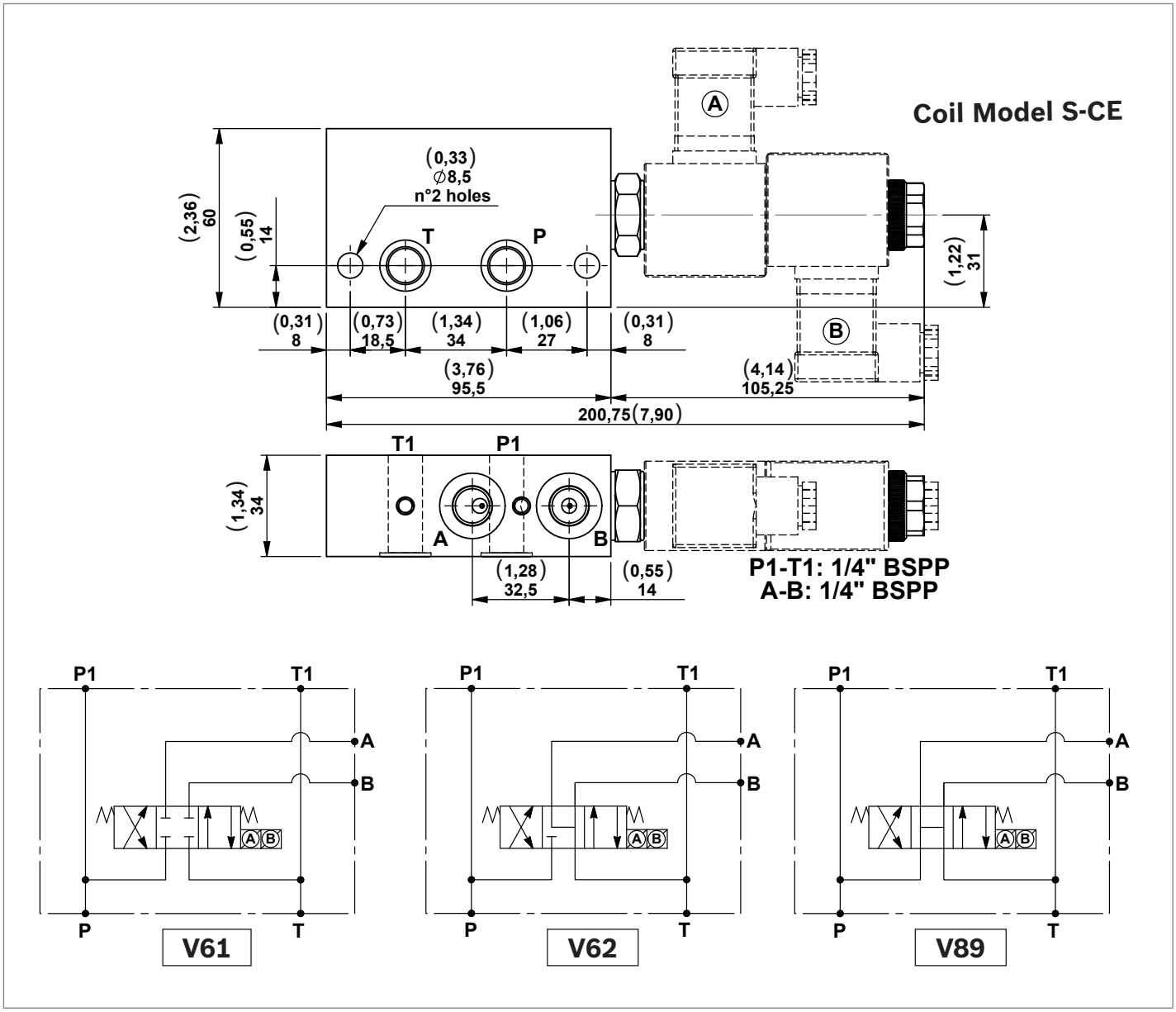

Code	Description	Max working pressure bar (psi)	Max flow l/min (gpm)	Type	Material number
V61	Modular block with 4 way 3 position solenoid valve (V4.3A)	210 (3046)	8 (2,11)	G386562010	R932001552
V62	Modular block with 4 way 3 position solenoid valve (V4.3B)	210 (3046)	8 (2,11)	G386563010	R932001556
V89	Modular block with 4 way 3 position solenoid valve (V4.3C)	210 (3046)	8 (2,11)	G386590010	R932001580

Dimensions [mm (inches)]

Modular block with four way three position solenoid valve and P.O. check valves on “A” and “B” line

A modular block with 4/3 spool type solenoid valve and P.O. check valves on “A” and “B” line. For small double acting cylinders.

Each block includes 2 OR 2056 gaskets.

Minimum voltage required: 90% of nominal.

Coils not included, must be ordered separately.

For the selection of coil model and voltage please refer to page 72.

For the selection of connectors please refer to page 75.

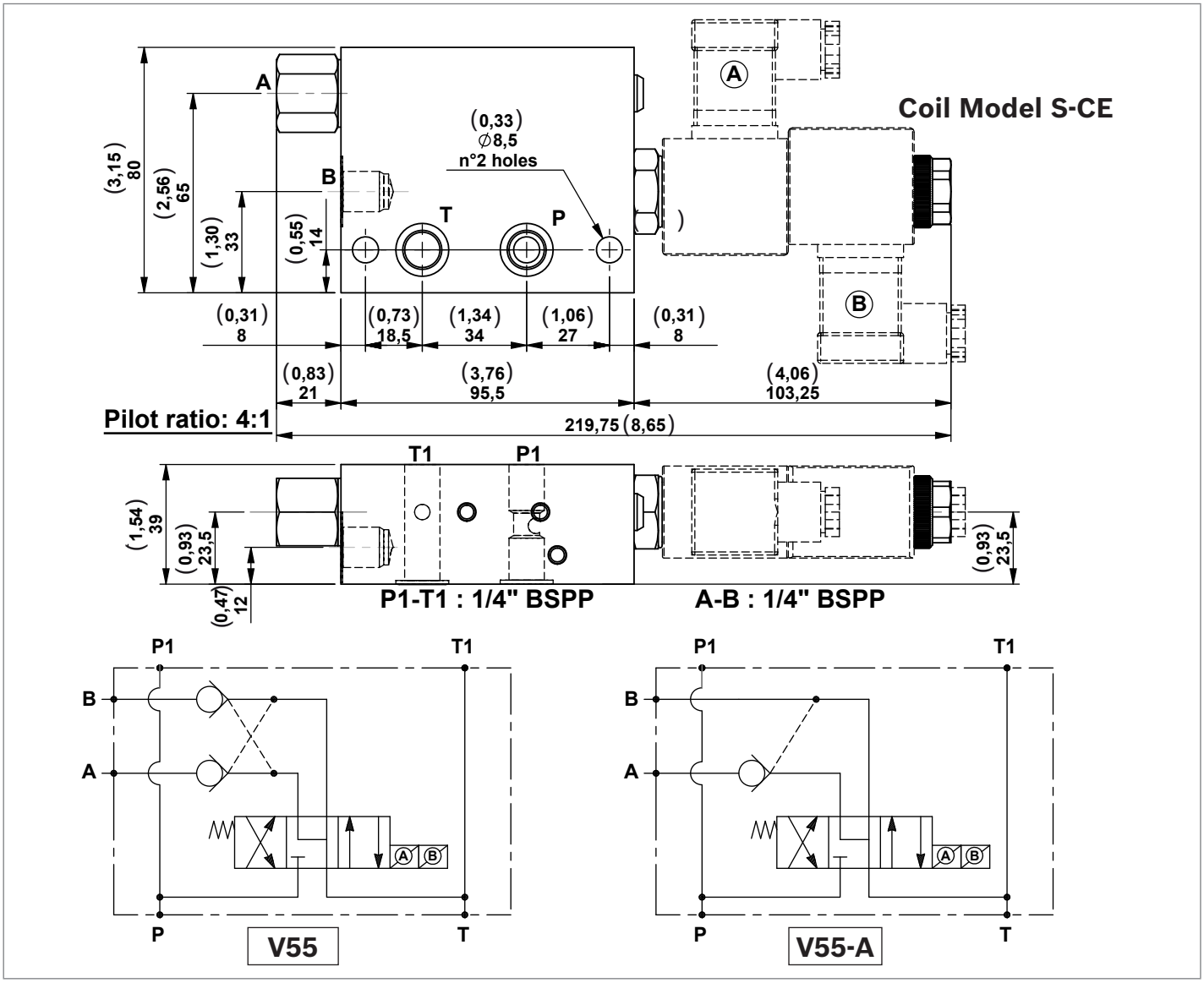

Code	Description	Max working pressure bar (psi)	Max flow l/min (gpm)	Type	Material number
V55	Modular block with 4 way 3 position solenoid valve and P.O. check valves on A and B **without O-Ring on pilot piston**	210 (3046)	8 (2,11)	G386591A10	R932001584
V55	Modular block with 4 way 3 position solenoid valve and P.O. check valves on A and B **with O-Ring on pilot piston**	210 (3046)	8 (2,11)	G386591B10	R932001589
V55/A	Modular block with 4 way 3 position solenoid valve and P.O. check valve on A **without O-Ring on pilot piston**	210 (3046)	8 (2,11)	G386591A1A	R932001581
V55/A	Modular block with 4 way 3 position solenoid valve and P.O. check valve on A **with O-Ring on pilot piston**	210 (3046)	8 (2,11)	G386591B1A	R932001586

Modular block with four way three position solenoid valve and P.O. check valves on “A” and “B” line

A modular block with 4/3 spool type solenoid valve and P.O. check valves on “A” and “B” line. For small double acting cylinders.
Each block includes 2 OR 2056 gaskets.
Minimum voltage required: 90% of nominal.
Coils not included, must be ordered separately.
For the selection of coil model and voltage please refer to page 72.
For the selection of connectors please refer to page 75.

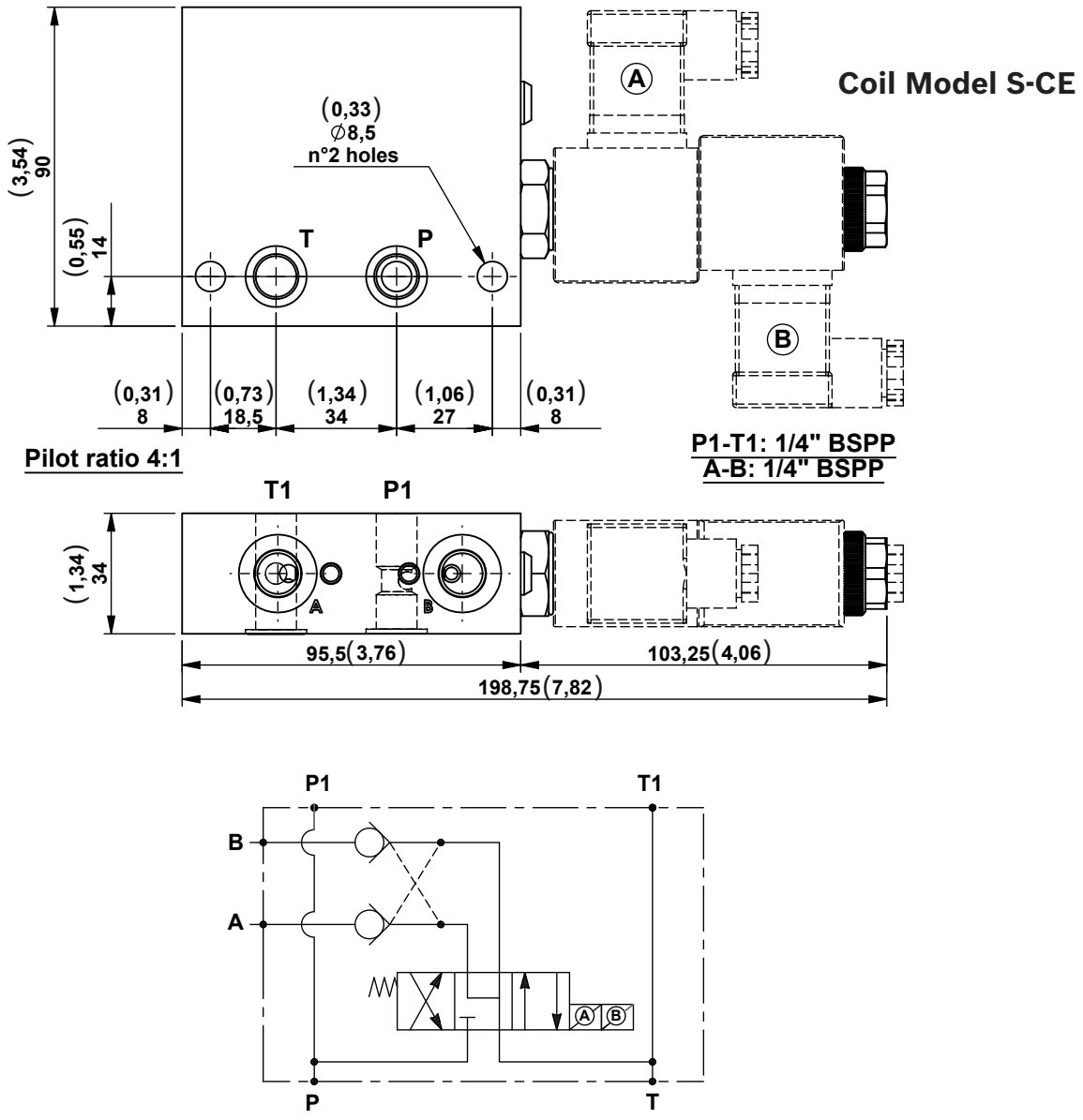

Code	Description	Max working pressure bar (psi)	Max flow l/min (gpm)	Type	Material number
V295	Modular block with four way three position solenoid valve and pilot operated check valves on "A" and "B" line	210 (3046)	8 (2,11)	1586500083	R932009708

Dimensions [mm (inches)]

Modular blocks with double locking solenoid valve

Each block includes 2 OR 2056 gaskets.

Coils not included, must be ordered separately.

For the selection of coil model and voltage please refer to page 72.

For the selection of connectors please refer to page 75.

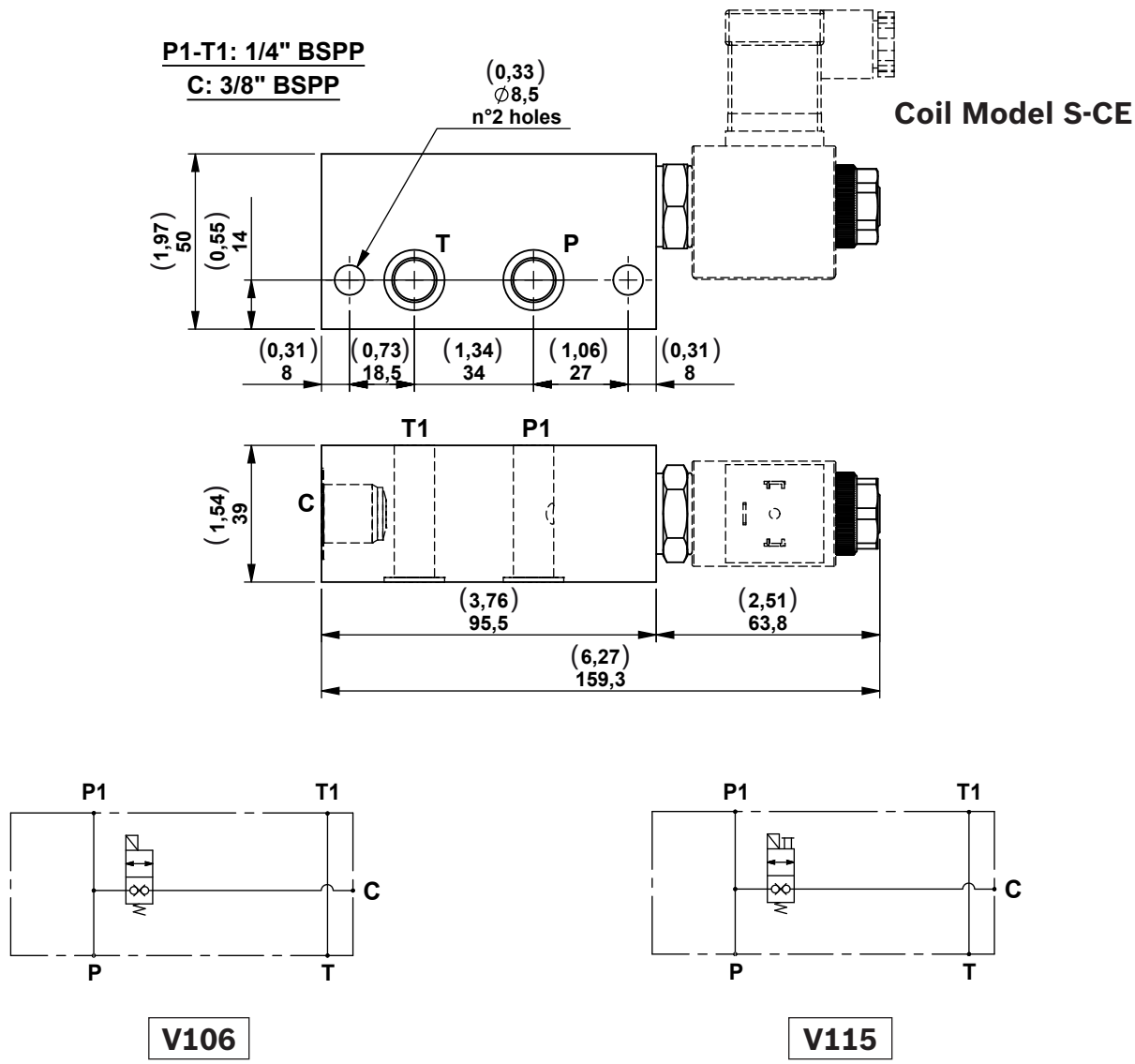

Code	Description	Max working pressure bar (psi)	Max flow l/min (gpm)	Type	Material number
V106	Modular block with CE3-DT solenoid valve	210 (3046)	16 (4,23)	G386606020	R932001613
V115	Modular block with CE3-DT-EM solenoid valve	210 (3046)	16 (4,23)	1586500023	R932004543

Modular block with 2 double locking solenoid valves

Each block includes 2 OR 2056 gaskets.

Coils not included, must be ordered separately.

For the selection of coil model and voltage please refer to page 72.

For the selection of connectors please refer to page 75.

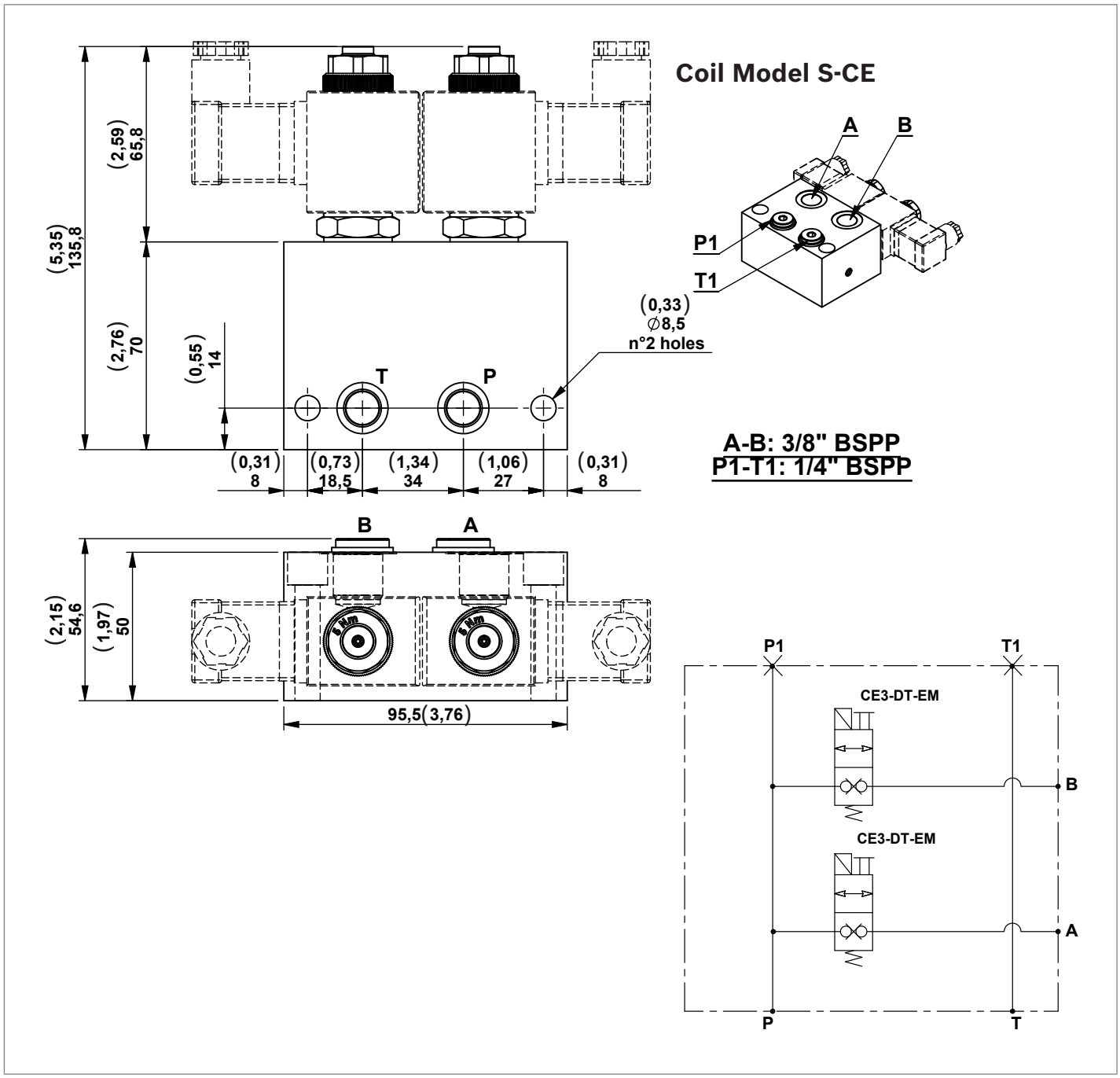

Code	Description	Max working pressure bar (psi)	Max flow l/min (gpm)	Type	Material number
V220	Modular block with 2 CE3-DT-EM with ports 3/8” BSPP	210 (3046)	16 (4,23)	1586500098	R932009614

Dimensions [mm (inches)]

Modular block with 2 double locking solenoid valves

Each block includes 2 OR 2056 gaskets.

Minimum voltage required: 90% of nominal.

Coils not included, must be ordered separately.

For the selection of coil model and voltage please refer to page 72.

For the selection of connectors please refer to page 75.

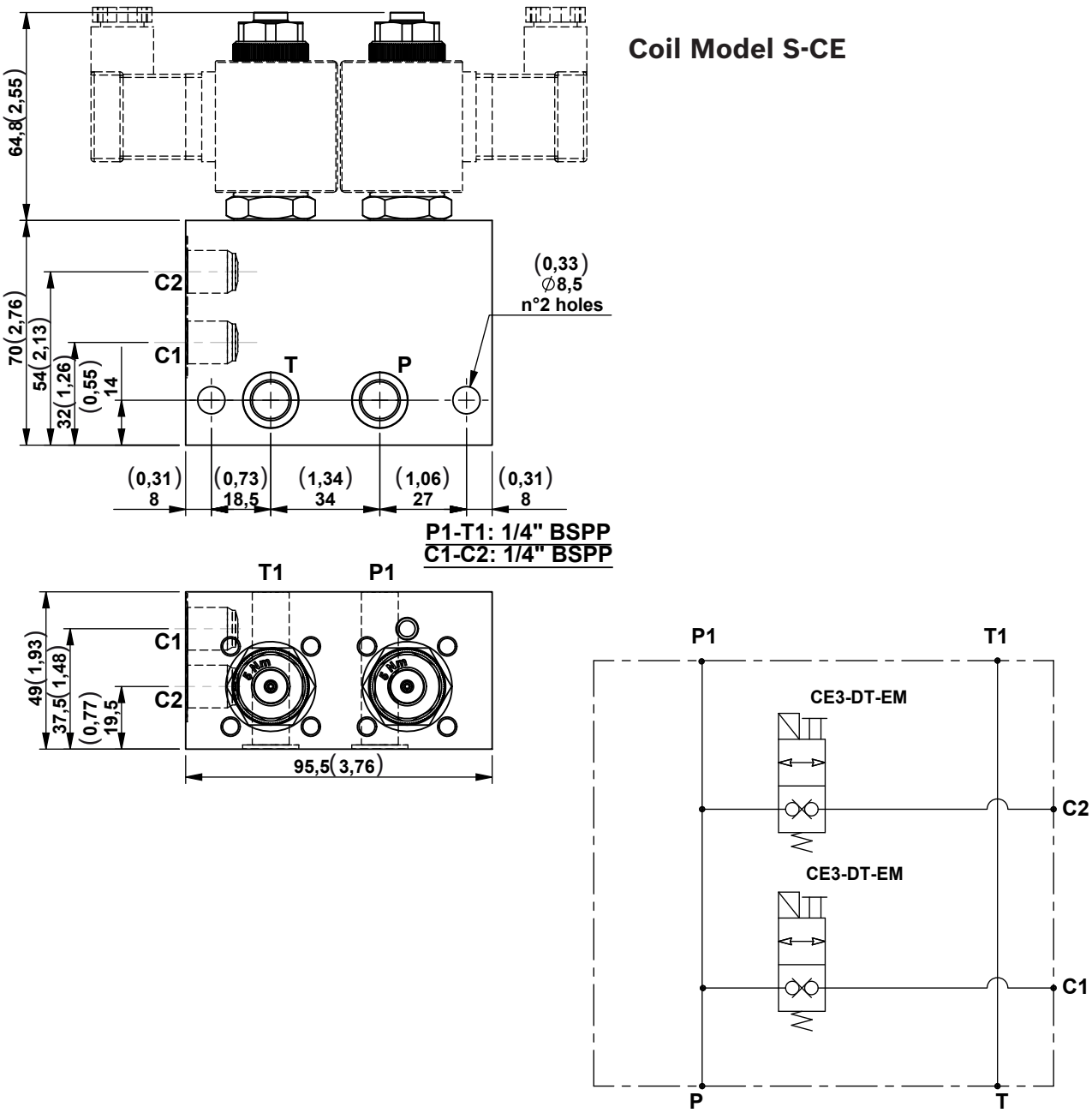

Code	Description	Max working pressure bar (psi)	Max flow l/min (gpm)	Type	Material number
V307	Modular block with 2 CE3-DT-EM with ports 1/4” BSPP	210 (3046)	16 (4,23)	1586500099	R932009709

Modular block with 2 double locking solenoid valves

Each block includes 2 OR 2056 gaskets.

Minimum voltage required: 90% of nominal.

Coils not included, must be ordered separately.

For the selection of coil model and voltage please refer to page 72.

For the selection of connectors please refer to page 75.

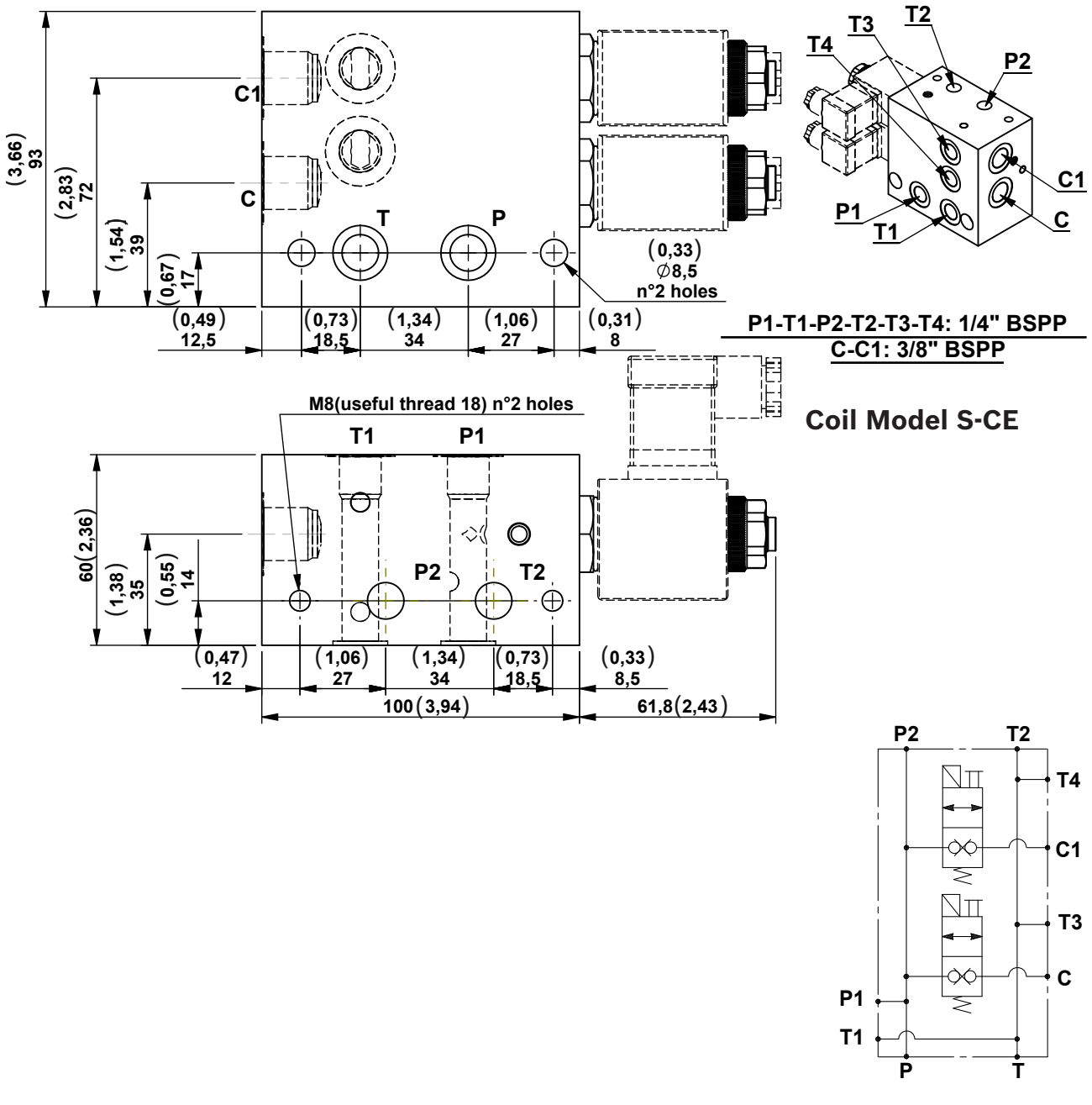

Code	Description	Max working pressure bar (psi)	Max flow l/min (gpm)	Type	Material number
V296	Modular block with 2 CE3-DT-EM with ports 3/8" BSPP and 2 auxiliary return ports	210 (3046)	16 (4,23)	1586500085	R932008993

Dimensions [mm (inches)]

Modular block with 2 double locking solenoid valves

Each block includes 2 OR 2056 gaskets.

Minimum voltage required: 90% of nominal.

Coils not included, must be ordered separately.

For the selection of coil model and voltage please refer to page 72.

For the selection of connectors please refer to page 75.

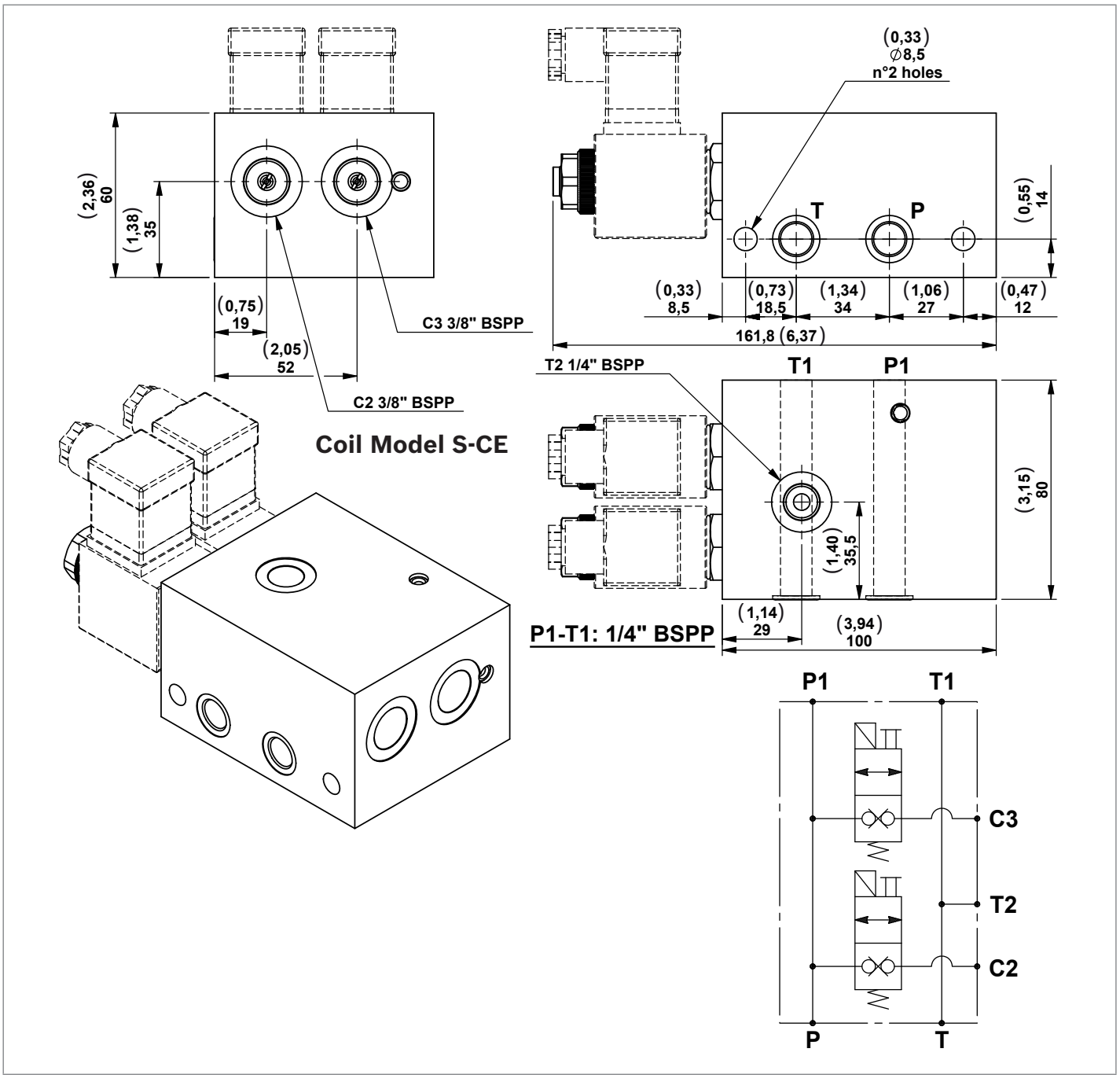

Code	Description	Max working pressure bar (psi)	Max flow l/min (gpm)	Type	Material number
V298	Block with 2 CE3-DT-EM solenoid valves and auxiliary return port	210 (3046)	16 (4,23)	1586500087	R932009712

Accessories

Isolator

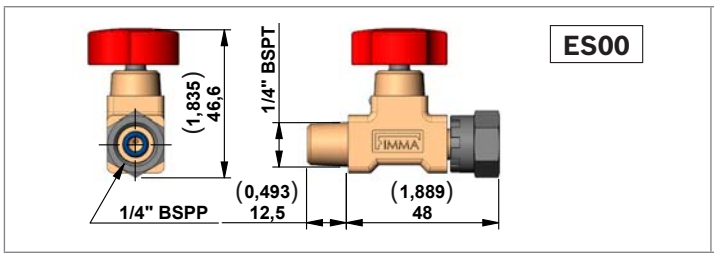

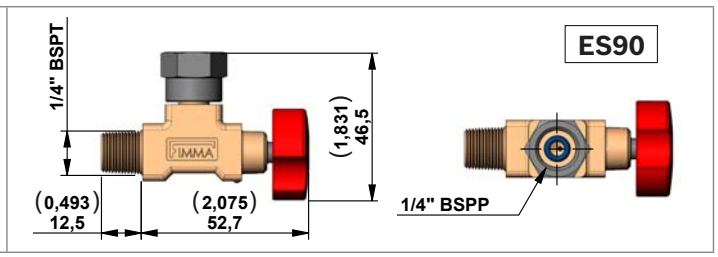

Code	Description	Type	Material Number
ES00	Straight isolator	EM 14	R932500182
ES90	90° isolator	EM 14 T	R932500184

Manometer

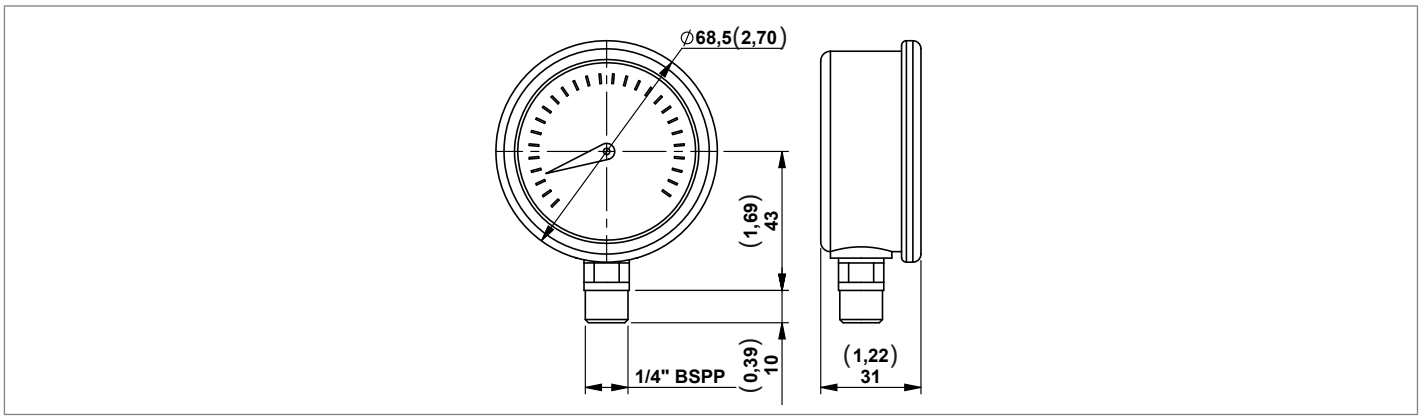

Code	Description	Pressure range bar (psi)	Type	Material Number
MN100	Pressure gauge	0-100 (0-1450)	C163017000	R932000582
MN160	Pressure gauge	0-160 (0-2320)	C163018000	R932000583
MN250	Pressure gauge	0-250 (0-3626)	C163019000	R932000584
MN315	Pressure gauge	0-315 (0-4568)	C163020000	R932000585

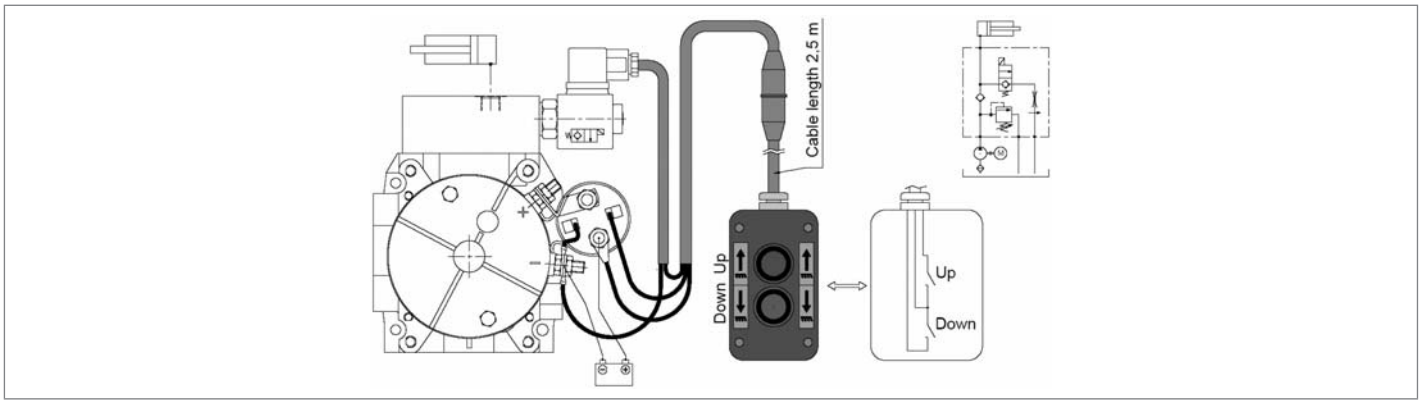

Description	Type	Material Number
Cables for D.C. motor and single acting cilinder	K2.501S1.218	R932002428

Dimensions [mm (inches)]

Standard Pressure Switches

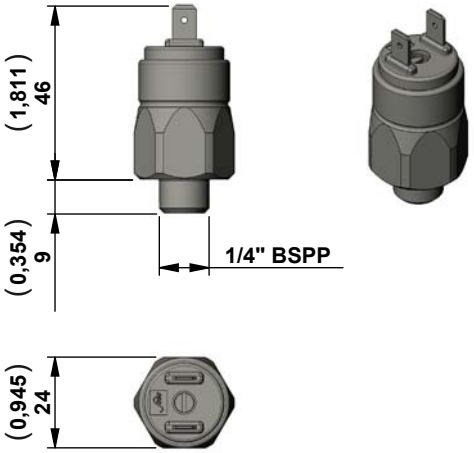

Code	Adjustment Range bar (psi)	Contact Type	Internal Features	Protection (with protective cap assembled)	Type	Material Number
PRNO20	10-20 (145-290)	N.O.	Diaphragm	IP65	C164761000	R932010002
PRNC20	10-20 (145-290)	N.C.	Diaphragm	IP65	C164766000	R932010001
PRNO50	20-50 (290-725)	N.O.	Diaphragm	IP65	C164767000	R932010003
PRNC50	20-50 (290-725)	N.C.	Diaphragm	IP65	C164768000	R932010004
PRNO150	50-150 (725-2175)	N.O.	Piston	IP65	C164769000	R932010005
PRNC150	50-150 (725-2175)	N.C.	Piston	IP65	C164770000	R932010006

Protective Cap for Standard Pressure Switches

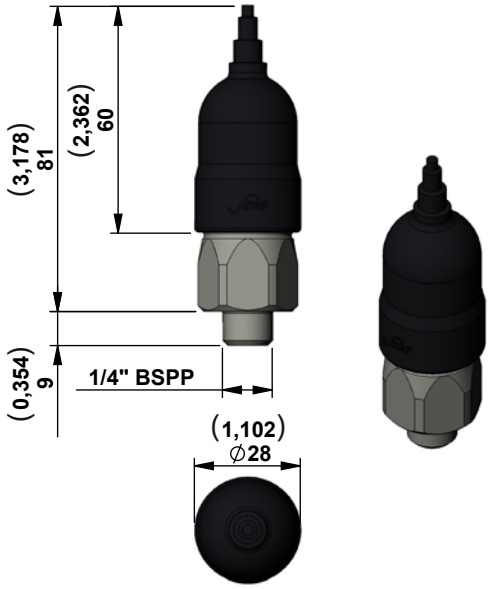

Code	Type	Material Number
CAP	F224013000	R932010000

Pressure Switches for manifold A9

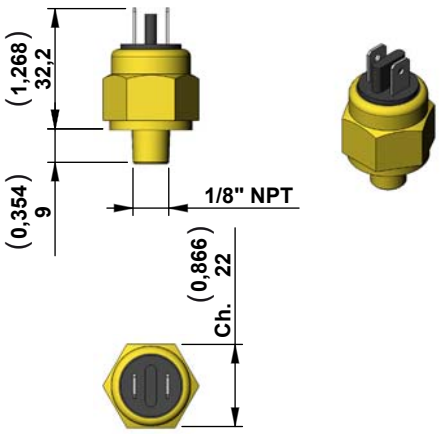

Code	Fixed Pressure Setting bar (psi)	Contact Type	Protection	Type	Material Number
PRDU	3 (44)	N.O.	IP00	C16470200A	R932008313

Horizontal Suction, Plastic Pipe

Tank Diameter

Ø 123	Ø 190	Ø 250

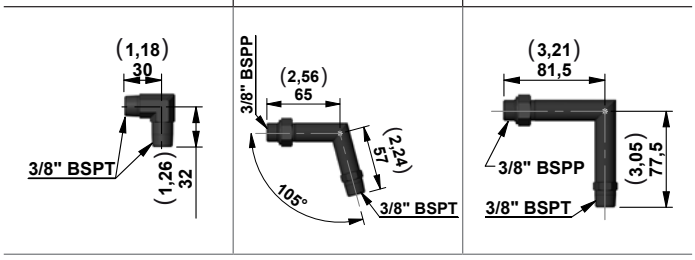

Central Manifold	Oil tank diameter mm (inch)	Type	Material Number
K	123 (4,84)	K2340S2144	R932006770
	190 (7,48)	K2501S1060	R932002408
	250 (9,84)	K2501S1061	R932002409

Tank Diameter

Ø 123	Ø 190	Ø 250

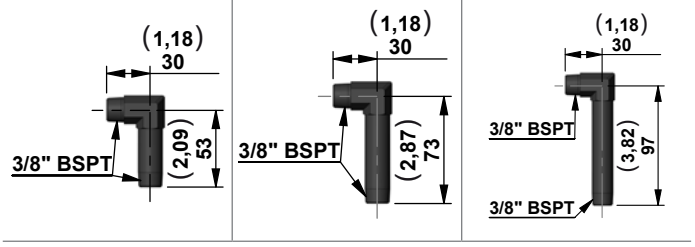

Central Manifold	Oil tank diameter mm (inch)	Type	Material Number
KE	123 (4,84)	K2340S2145	R932006771
	190 (7,48)	K2340S2146	R932006772
	250 (9,84)	K2340S2147	R932006773

Vertical Suction, Plastic Pipe

Central Manifold	H mm (inch)	Type	Material Number	Drawing ref.	Drawing
KE - K	32 (1,26)	K234069000	R932002347	B	
	33 (1,30)	K2340S2130	R932002303	A	
	36 (1,42)	K2340S2123	R932002299	A	
	45 (1,77)	K2340S2118	R932002297	A	
	47 (1,85)	K234073000	R932002349	B	
	56 (2,20)	K2340S2129	R932002302	A	
	67 (2,64)	K2340S2131	R932002304	A	
	76 (2,99)	K234074000	R932002350	B	
	98 (3,86)	K234076000	R932002351	B	
	107 (4,21)	K2340S2133	R932002306	A	
	109 (4,29)	K234079000	R932002352	B	
	117 (4,61)	K2340S2110	R932002289	A	
	129 (5,08)	K234072000	R932002348	B	
	130 (5,12)	K2340S2121	R932002298	A	
	144 (5,67)	K234063000	R932002343	B	
	153 (6,02)	K2340S2134	R932002307	A	
	163 (6,42)	K2340S2135	R932002308	A	
	171 (6,73)	K2340S2111	R932002290	A	
	178 (7,01)	K2340S2136	R932002309	A	
	194 (7,64)	K234066000	R932002345	B	
	198 (7,79)	K2340S2137	R932002310	A	
	211 (8,31)	K234064000	R932002344	B	
	218 (8,58)	K2340S2125	R932002300	A	
	233 (9,17)	K2340S2112	R932002291	A	
	241 (9,49)	K2340S2138	R932002311	A	
	251 (9,88)	K2340S2139	R932002312	A	
	280 (11,02)	K2340S2113	R932002292	A	
	293 (11,53)	K2340S2140	R932002313	A	
	313 (12,32)	K2340S2114	R932002293	A	
	330 (12,99)	K2340S2115	R932002294	A	
	341 (13,42)	K2340S2141	R932002314	A	
	351 (13,82)	K2340S2116	R932002295	A	
	369 (14,53)	K2340S2142	R932002315	A	
	378 (14,88)	K2340S2117	R932002296	A	
	398 (15,67)	K2340S2128	R932002301	A	

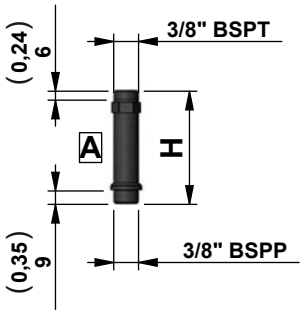

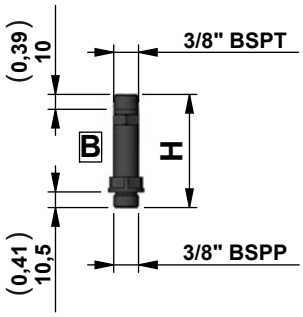

Vertical Suction, Steel Pipe

Central Manifold	H mm (inch)	Type	Material Number	Drawing
KE - K	86 (3,39)	K234006000	R932009324	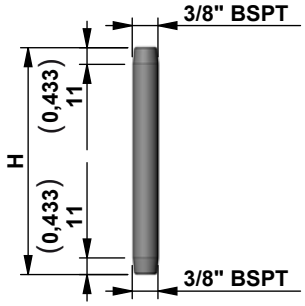
	100 (3,94)	K234081000	R932002353	
	110 (4,33)	K234083000	R932002355	
	117 (4,61)	K2340S2162	R932009323	
	150 (5,91)	K234004000	R932002317	
	160 (6,30)	K2340S2151	R932008456	
	178 (7,01)	K234086000	R932002356	
	212 (8,35)	K234093000	R932002360	
	260 (10,24)	K234087000	R932002357	
	287 (11,30)	K234071000	R932006600	
	348 (13,70)	K2340S2027	R932002272	
	357 (14,05)	K234092000	R932002359	
	385 (15,16)	K234062000	R932002342	
	520 (20,47)	K2340S2047	R932008033	

Suction Filter

Compatibility	Filtering Degree (µm)	Max Flow l/min (gpm)	Type	Material Number	Drawing
KE - K	90	8 (2,11)	K225582000	R932010860	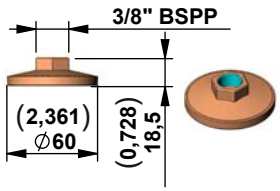
	90	15 (3,96)	K225566000	R932002243	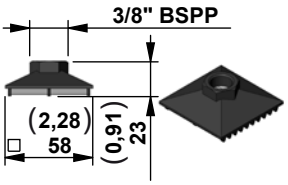

Horizontal Return, Steel Pipe

L mm (inch)	H mm (inch)	Type	Material Number	Drawing
120 (4,72)	45 (1,77)	K234716000	R932002375	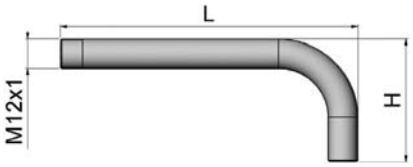
134 (5,28)	90 (3,54)	K234717000	R932002376	
170 (6,69)	90 (3,54)	K234727000	R932002383	

Vertical Return, Plastic Pipe

H mm (inch)	Type	Material Number	Drawing ref.	Drawing
100 (3,94)	K234715000	R932002374	A	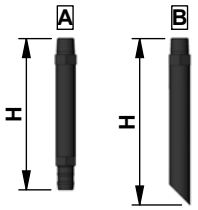
110 (4,33)	K234780000	R932011081	B	
120 (4,72)	K234781000	R932011082	B	
150 (5,91)	K234714000	R932002373	A	
160 (6,30)	K234782000	R932011083	B	
200 (7,87)	K234713000	R932002372	A	
250 (9,84)	K234784000	R932011084	B	
300 (11,81)	K234785000	R932011085	B	
400 (15,75)	K234786000	R932011086	B	

Vertical Return, Steel Pipe

H mm (inch)	Type	Material Number	Drawing
250 (9,84)	K234718000	R932002377	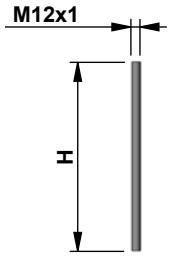
300 (11,81)	K234719000	R932002378	
400 (15,75)	K234722000	R932002379	

Compact power modules
DL series

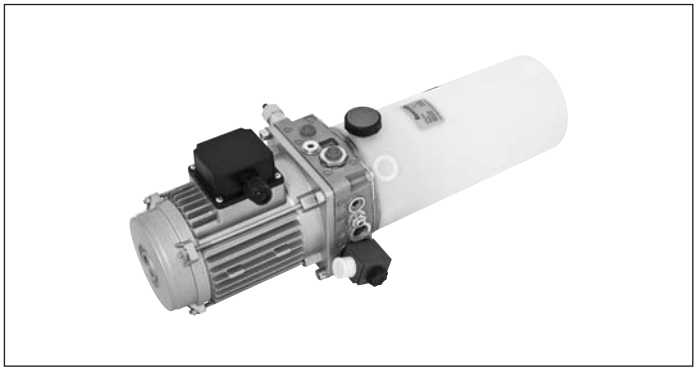

Contents

Ordering details for compact power modules for dock leveller with hinged lip (manifold code 66-67-68) 2
Ordering details for compact power modules for dock leveller with telescopic lip (manifold code 73-74) 4
General Technical Data for Compact Power Module DL 6
A.C. Electric Motor Compact Mounting Style for Power Module Type DL 11
Central Manifold DL 13
Flow Restrictor 18
Coil 19
Connectors 20
Gear Pumps 21
Oil Tanks for DL 22
Oil Tanks for DE 23
Mounting position 24
Terminal Box Position for A.C. Motors 24
Mounting Brackets 25

Ordering details for compact power modules for dock leveller with hinged lip (manifold code 66-67-68)

01	02		03		04		05		06		07		08		09
DL	____	-	____	-	___/__(___)	-	____	-	___/__	-	____	-	_____	-	__/__/___

Family

01	Power module type	**DL**

A.C. Electric motor

02	Select the required AC motor shown in the catalogue. (See page 11)	

Junction Elements

03	The code of the Junction Element is showing in the page after the selected AC motor.	

Central Manifold

04	Central Manifold with Pressure range Sequence Valve + Request Setting of the Relief Valve DB in Bar between brackets + Request setting of the sequence valve V2 in Bar between brackets + Request setting of the Relief Valve DB2 in Bar between brackets (DB2 only for manifold code 68)	

Flow restrictor

05	Select the required setting of flow restrictor on B line (see page 18)	

Coil Model and Connector

06	Choice the required coil Voltage and the required Connector. (See page 19)	

Gear pumps

07	Is possible to select the required pump between Standard Version and Low Duty version. (See page 21)	

Oil Tank

08	Select the required Oil Tank (See page 22)	

Mounting Position and Mounting Brackets

09	Select the required working position of the Power Module and the position of the terminal box of the motor. If needed select a Mounting Bracket (See page 24)	

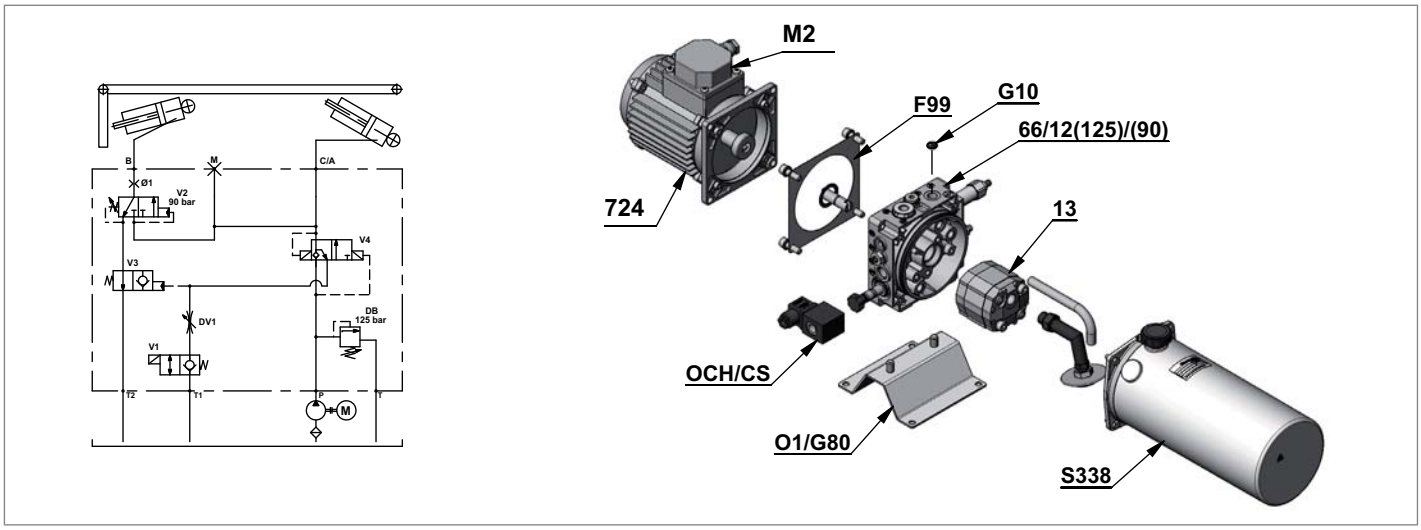

Example of Ordering Details

01	02		03		04		05		06		07		08		09
DL	**742**	**-**	**F99**	**-**	**66 / 12 (125)/(90)**	**-**	**G10**	**-**	**OCH/CS**	**-**	**13**	**-**	**S338**	**-**	**O1 / M2/G80**
Power module type	AC Electric motor		Junction Element		Central Manifold with Pressure range Sequence Valve + Request Setting of the Relief Valve DB in Bar between brackets + Request setting of the sequence valve V2 in Bar between brackets		Setting of flow restrictor on B line		Coil Model and Connector		Gears pump		Oil Tank		Mounting Position and Mounting Brackets

Ordering details for compact power modules for dock leveller with telescopic lip (manifold code 73-74)

01	02		03		04		05		06		07		08		09
DL	____	-	____	-	___/__(___)	-	____	-	___/__	-	____	-	_____	-	__/__/___

Family

01	Power module type	**DL**

A.C. Electric motor

02	Select the required AC motor shown in the catalogue. (See page 11)	

Junction Elements

03	The code of the Junction Element is showing in the page after the selected AC motor.	

Central Manifold

04	Central Manifold with Pressure range Relief Valve + Request Setting of the Relief Valve VM1 in Bar between brackets + Request setting of the Relief Valve VM2 in Bar between brackets + Request setting of the Relief Valve VM3 in Bar between brackets (VM3 only for manifold code 74)	

Flow restrictor

05	Select if needed the setting of flow restrictor on B line (see page 18)	

Coil Model and Connector

06	Choice the required coil Voltage and the required Connector. (See page 19)	

Gear pumps

07	Is possible to select the required pump between Standard Version and Low Duty version. (See page 21)	

Oil Tank

08	Select the required Oil Tank (See page 22)	

Mounting Position and Mounting Brackets

09	Select the required working position of the Power Module and the position of the terminal box of the motor. If needed select a Mounting Bracket (See page 24)	

Ordering details for compact power modules for dock leveller with telescopic lip (manifold code 73-74)

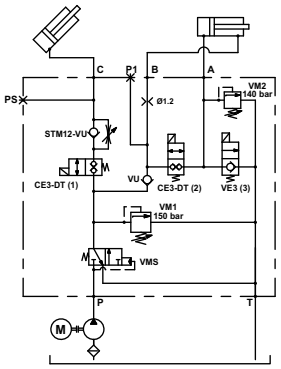

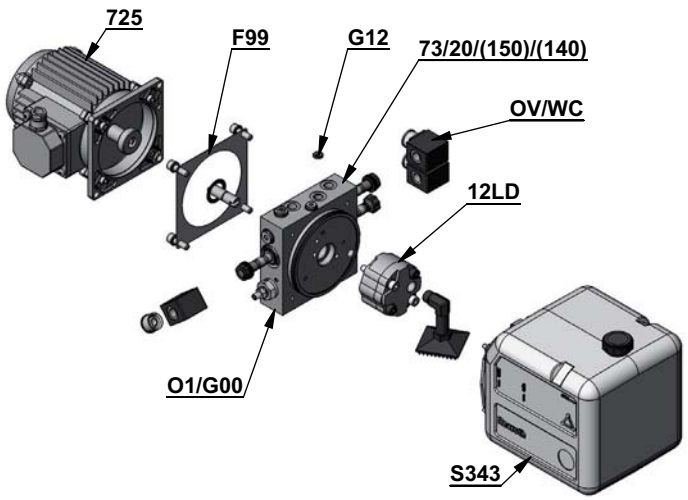

Example of Ordering Details

01	02	03	04	05	06	07	08	09
DL	**725** -	**F99** -	**73 / 20 (150)/(140)** -	**G12** -	**OV/WC** -	**12LD** -	**S343** -	**O1/G00**
Power module type	AC Electric motor	Junction Element	Central Manifold with Pressure range Relief Valve + Request Setting of the Relief Valve VM1 in Bar between brackets + Request setting of the Relief Valve VM2 in Bar between brackets.	Setting of flow restrictor on B line	Coil Model and Connector	Gears pump	Oil Tank	Mounting Position and Mounting Brackets

General Technical Data for Compact Power Module DL

Application description:

A Dock leveller is a structure which is typically fixed at the doors of the warehouse to load/unload goods. It's used as a crossing bridge by Forklift, Transpallet etc, between the floor of the warehouse and the truck. (Picture 1)

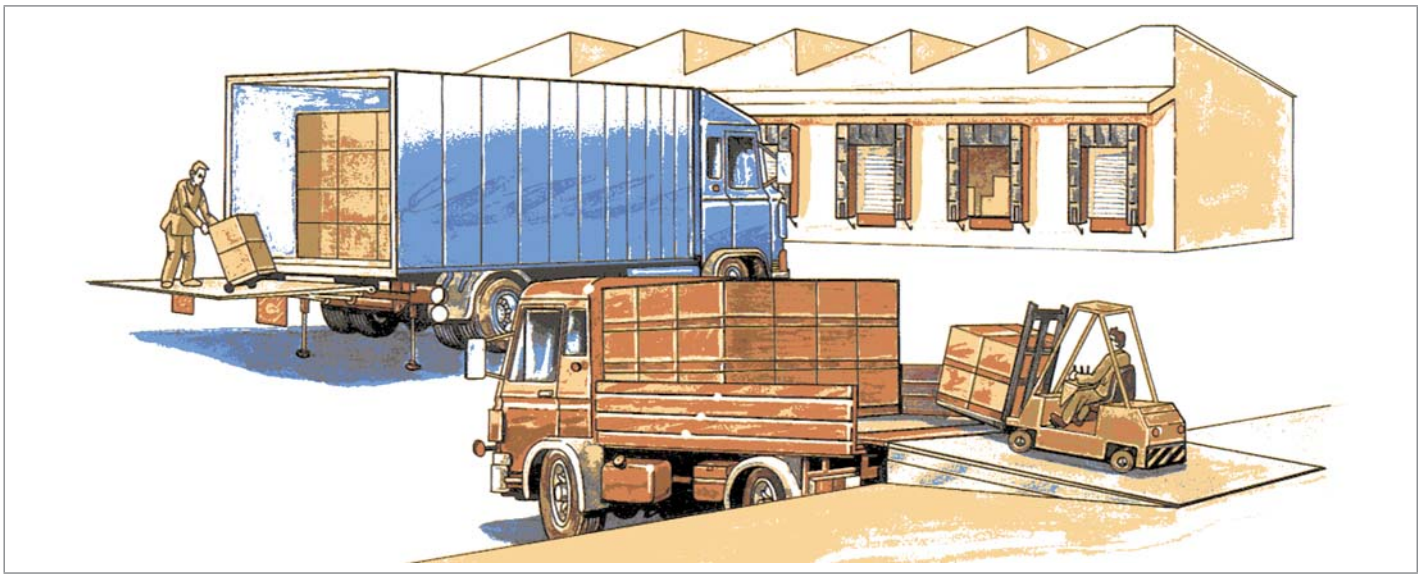

Picture 1 (Example of dock leveller)

Hydraulic system description:

In a Dock leveller the hydraulic system is characterized by a main single acting cylinder C (in some case 2 single acting cylinders connect to the same ports of the compact power module) for the lifting function and a single acting cylinder to move the lip D in case of Dock leveller with a hinged lip (picture 2-3) or a double acting cylinder in case of Dock leveller with a telescopic lip. (Picture 4)

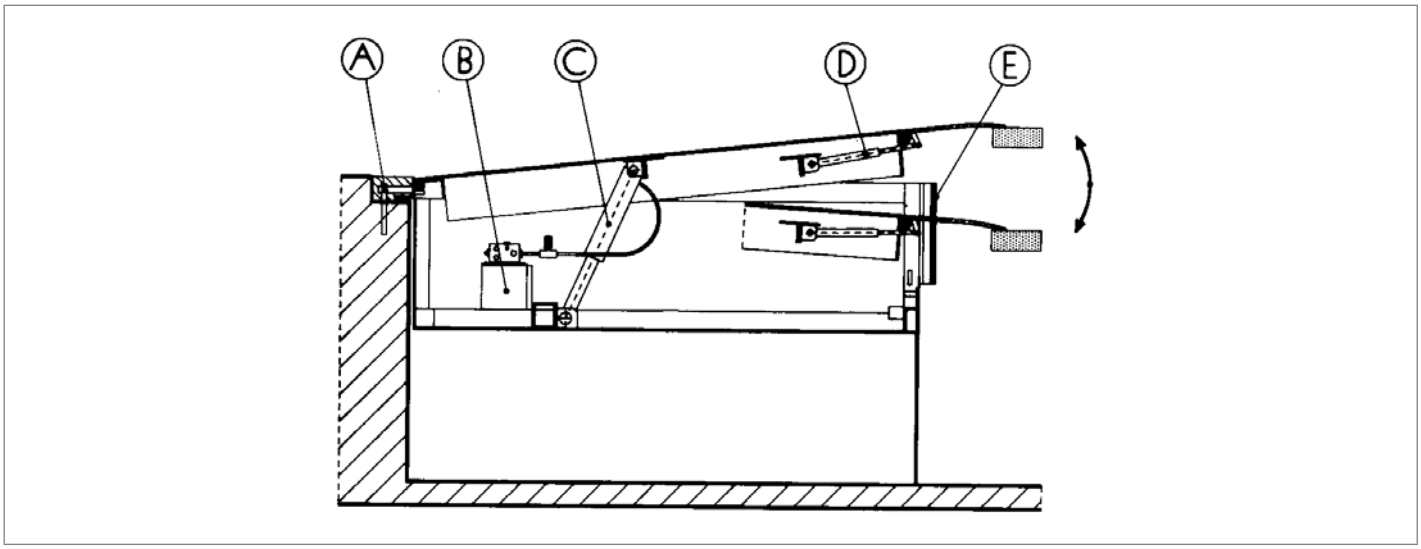

Picture 2 (typical Hydraulic Dock leveller scheme)

A) Dock leveller anchorage
B) Compact Power Module
C) Single acting cylinder to lift the dock leveller
D) Lip movement cylinder
E) Rubber protection

How the system works:

Hydraulic Dock leveller with Single acting cylinders hinged lip (Picture 3)

Lifting phase: By switching on the electric motor, the gear pump pushes oil into the system and with the raising of the pressure the V4 valve changes over giving the possibility for the oil to push the main lifting cylinder connected to the port C/A; The solenoid valve V1 must always be energized or the system doesn't work.

When the main lifting cylinder arrives at the end of the run, the pressure increases and allows for the opening of the V2 sequence valve that starts to put oil into the hinged lip single acting cylinder connected to the port B; The opening speed is set by the dimension of the orifice Ø....

Lowering phase: By stopping the electric motor, the V4 valve changes over on to the normal position, so the oil goes to the return line, crossing the V1 and through the throttle valve DV1 which maintains a backpressure on the system that causes the changing over of the V3 valve that guarantees a backpressure on the lip single acting cylinder and for this reason the lip remains lifted while the main single acting cylinder lowers down. When the main singleacting cylinder stops lowering, leaning on the truck, the pressure on the system is out and automatically the V3 valve goes on the normal position, allowing the oil to run on the return line and allowing the lip to lean on to the track. The Dock leveller remains free to swing to compensate the differences on the truck level during the loading/unloading operations.

Closing phase: To close the Dock leveller you need to restart the motor by lifting the main cylinder (in consequence the lip cylinder is going to close with a setting speed set by the orifice Ø...).

When the lip is completely close the motor can be switched off and the Dock leveller returns to the normal position.

The V1 solenoid valve normally is connected to the emergency push button of the system. Pushing the emergency button the V1 valve return in closed position keeping the cylinder in position.

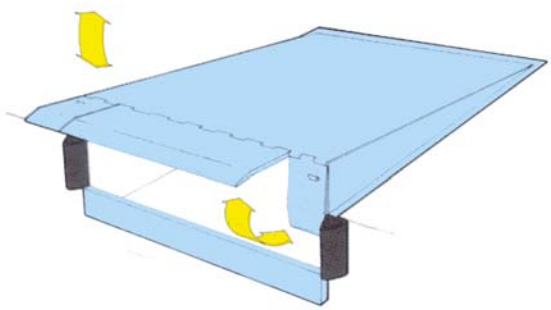

Picture 3 (Hydraulic hinged lip Dock leveller)

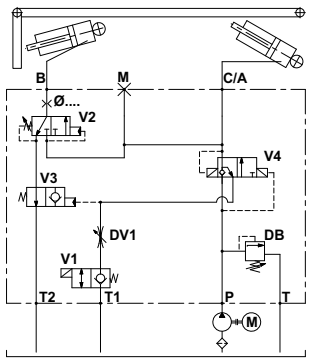

Scheme 1

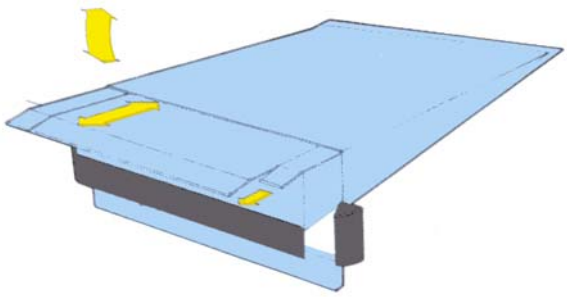

Picture 4 (Hydraulic telescopic lip Dock leveller)

Hydraulic Dock leveller with double acting cylinder telescopic lip (Picture 4).
Opening phase: On the opening phase you need to switch on the electric motor energizing simultaneously the CE3-DT (1) solenoid valve. The VMS valve changes over and the main cylinder connected to port C lifts: When the main cylinder arrives at the required position, we energize the CE3-DT (2) solenoid valve and in consequence the telescopic lip double acting cylinder comes out in a regenerative mode between the A zone and B zone. When the telescopic lip arrives at the end of stroke the motor is switched off and all the solenoid valves are switched off too, so that the Dock leveller is completely open. The lip exit speed is controlled by the orifice Ø1.2 (optional).

Lowering phase: With the motor switched off the Dock leveller starts to lower itself energizing the CE3-DT (1) solenoid valve which moves the main cylinder, which lowers down until it is leaning itself on the truck. The lowering speed is controlled by the STM12-VU valve.
The VM2 relief valve that is located on the double acting cylinder A line works as an antishock during the lip exit phase and also as protection of the same in case of an occasional bump as the truck stops.
Closing phase. To bring back the Dock leveller to the sleeping position, we need to repeat the opening phase to lift the Dock leveller from the truck and after to retract back the lip we need to energize the VE3 (3) solenoid valve which puts the double acting chamber A on the return line.

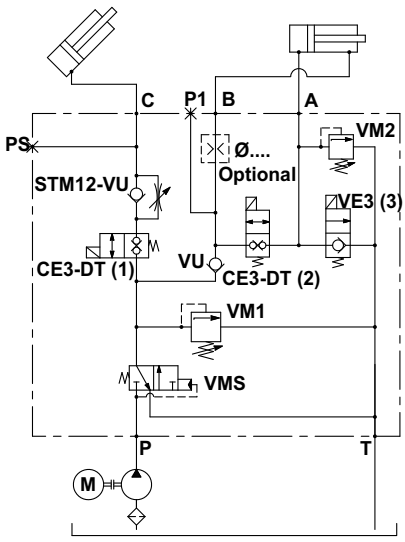

Scheme 2

Power module selection
Choose the circuit which meets your application requirements.
Take note of all dimensions resulting from the basic components chosen for your application.
NOTE: dimensions may vary slightly and should be confirmed by DCOC, if the assembly is to be installed in a space with narrow clearance.
The tank capacity and the tank dimensions need to be large enough to assure proper pump suction: there must always be a reserve of oil in the tank when all cylinders are fully extended and avoid overflow when cylinders are fully retracted.
The tank must be evaluated also for best separation of air from oil, and for settling down oil contamination. It should be placed in a space with, at least, natural ventilation and it should permit enough heat dissipation to prevent high fluid temperature.
Select the electric motor by evaluating the power needed and the motor compliance with the heat developed during the expected run time (or „duty cycle“).

Hydraulic fluid for compact power module
Mineral oil based hydraulic fluids suitable for hydraulic systems can be used; they should have physical lubricating and chemical properties as specified by:

MINERAL OIL BASED HYDRAULIC FLUIDS HL (DIN 51524 part 1)
MINERAL OIL BASED HYDRAULIC FLUIDS HL P(DIN 51524 part 2)

For use of environmentally friendly fluids please consult DCOC.

Fluid viscosity, Temperature range of the operating fluid, Ambient temperature
The fluid viscosity should remain within the range 10 to 300 cSt (centistokes); recommended 15 to 120 cSt .
Permissive cold start viscosity is maximum 2000 cSt .
The fluid temperature should remain within the range -15°C nd 80°C (5°F and 176°F).
Note: For compact power module with plastic tank the fluid temperature should remain within the range -15°C and 70°C (5°F and 158°F).
Ambient temperature -15°C +40°C (5°F and 104°F).

Fluid cleanliness requirements and maintenance
We recommend a cleanliness of the operating fluid according to ISO 4406 Class 20/18/15 or cleaner.
All components of the hydraulic circuit , including hoses and actuators, must be flushed and cleaned before assembling, because the compact power module has a suction filter only.
The hydraulic fluid should be replaced after the first 50 hours, and then every 1000 hours, or, at least, once a year.

Power module installation
The mounting position is basically unrestricted; just avoid installations that could compromise the pump suction, Typically in these applications the Compact Power Module is assembled in horizontal position. It is recommended to support the power module on vibration dampening blocks when the mounting structure is expected to vibrate.

Wiring and starting-up
The cable size and lenght from the power source to the electric motor should be selected in order to avoid voltage drop.
It is strictly forbidden to allow the backwards rotation of the pump even at the first starting: to prevent reverse rotation, the wiring polarities must be correctly connected.
Caution: when energized, the surface temperature of the electric motor could reach temperature levels of 60-80°C (140-176°F): care should be taken to avoid any accidental contact of people with the motor surface.

A.C. Motors
The tolerances on the nominal voltage are:
Single phase motor: 230V +/-5% - Three phase motor: 230-400V +/-10%.
Protection degree : IP54 (protection against dust and water splash).
Insulation class: F (155°C) (311°F).
All motors are aluminum alloy die cast without painting.

Central Manifolds
The Central Manifolds shown in the catalogue are made in die cast aluminium alloy or extruded aluminum alloy AL 2011 (Al-Cu5.5Pb0.4Bi0.4 UNI 9002/5).. The validation of the Central Manifolds follows a lifetest with 250 bar (3625 psi) pulsed pressure repeated for 300.000 cycles.

Built-in valves
The valves used in the central manifolds are manufactured using steel with high mechanical strength. Surface treatments protect the exposed parts to the external environment. Standard seals are NBR (BUNA-N) with backup rings in PTFE. The cartridge valves with “leak proof seat design” have an average leakage of 10-15 drops/minute (< 1 cm3/minute (0.06 in3/min)) at the maximum pressure using fluid ISO VG46 at 40°C (104°F). The

validation of the cartridge valves follows a life-test at pulsed maximum pressure (indicated for each valve) repeated for 500.000 cycles.
All the solenoid cartridge valves are fitted with protective O-Rings installed between the pole tube and the coil. These O-Rings protect the internal parts from condensation and contaminants , which could cause malfunction.
All the solenoid cartridge valves are designed for operating in D.C..
Power supply in A.C. requires a connector with bridge rectifier included.

External Gear Pumps
DCOC offers a wide range of External Gear Pumps to cover different kind of applications. The standard version are suitable for the biggest part of applications. The Low Duty pumps are a dedicated series of pumps for this kind of applications that are particulary cost effective. All the pumps are pressure compensated to guarantee the best efficiency.

Oil Tanks
In this catalogue you will find a wide selection of steel and plastic tanks available as a standard product. Steel tanks have Black paint finish and are suitable for operating temperature range -15°C / +80°C (5°F / 176°F). Plastic tanks are obtained in one piece in order to avoid welded parts that are weak points at extreme temperature and vibrations. Plastic tanks are suitable for operating temperature range -15°C / +70°C (5°F / 158°F).
Note: even if the plastic tank mounting system is designed to avoid oil leakage the tank must be securely anchored when fitted in mobile equipment and when subject to shocks and heavy vibrations. Please check that the anchorages do not stress or deform the tank.

European machine directive 2006/42/CE
According to the Machine Directive2006/42/CE, a complete power module, as described in paragraph 15 and made available to the European market, enters into the definition of „partly completed machinery“.
Instead, the power module subassemblies (motor, pump, reservoir, central manifold,...), when not assembled into a complete power pack, are considered „components“ which can be employed in a „machinery“ or a „partly completed machinery“. In this case, the DCOC components and subassemblies must be fitted in compliance with all the relevant technical data sheet applicable to the product, and shall not be operated, adjusted or disassembled before the complete machinery where they are incorporated has been declared to be in compliance with the Machine Directive 2006/42/CE.

Note
All the components shown in the catalogue ARE NOT suitable for use in potentially explosive atmosphere.

Technical information
Below you will find the most common equations used in hydraulics:

	Common Units	Symbols	Equations
Flow	l/min	Q	$Q=\frac{D \times n}{1000} \times 0,95$
Operating pressure	bar	P	$P=\frac{F}{0,1 \times A}$
Internal diameter hydraulic cylinder	mm	d	–
Area of hydraulic cylinder	mm^2	A	$A=\frac{\Pi \times d^2}{4}$
Piston force	N	F	–
Drive shaft	rev/min	n	–
Power requirement for motor	kW	N	$N=\frac{P \times Q}{612}$
Pump displacement	cm^3/rev	D	–
Torque requirement	Nm	M	$M=\frac{D \times d^2}{62,8 \times 0,87}$

A.C. Electric Motor Compact Mounting Style for Power Module Type DL

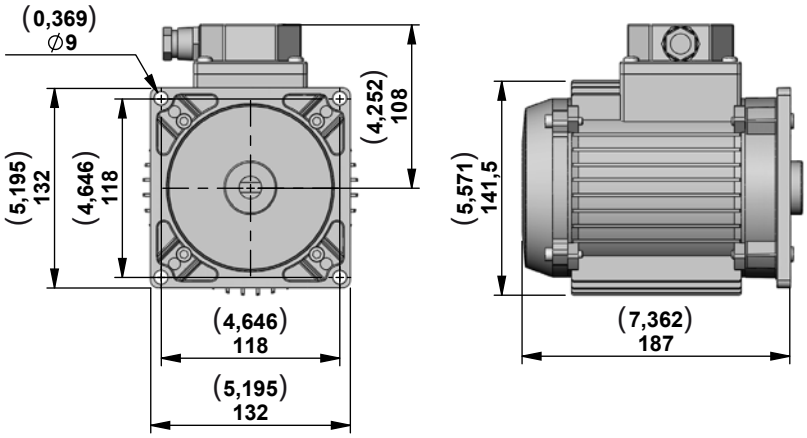

Three Phase Current Motors 230/400V 50Hz
IP54 Size IEC 71

Code	Type	Material Number	Power (kW)	Power (hp)	Poles	Rpm at 50Hz	Duty Cycle	Thermal Switch
724	C1622S1085C	R932000302	0,75	1	2	2900	S3 30%	no
724T	C1622S1368C	R932006634	0,75	1	2	2900	S3 30%	yes
725	C1622S1083C	R932000301	1,1	1,5	2	2900	S3 30%	no
725T	C1622S1374	R932000423	1,1	1,5	2	2900	S3 30%	yes

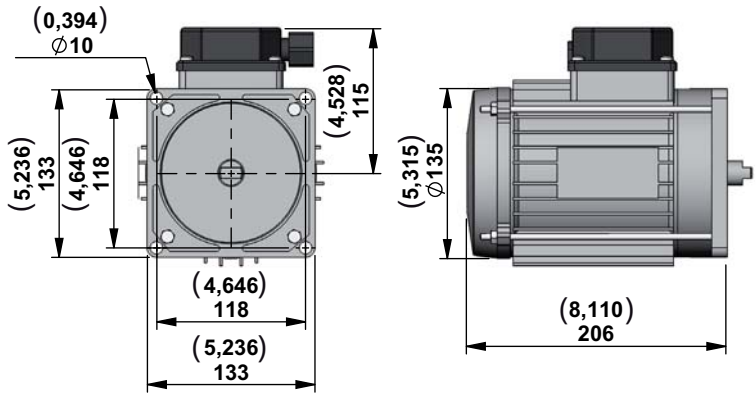

Three Phase Current Motors 230/400V 50Hz
IP54 Size IEC 80

Code	Type	Material Number	Power (kW)	Power (hp)	Poles	Rpm at 50Hz	Duty Cycle	Thermal Switch
826T	C1622S1410C	R932011320	1,5	2	2	2800	S3 20%	yes
827T	C1622S1409C	R932011321	2,2	3	2	2800	S3 15%	yes

Dimensions [mm (inches)]

The motors shown in these tables are a selection of our range.
In case of needs of different technical characteristics PLEASE CONTACT OUR SALES DEPARTEMENT.

NOTE
The electric motors shown in this pages are delivered by different certified suppliers.
This means the indicated dimensions could change a little, depending on which manufacturer will be assembled. On the CPM the choice of the manufacturer is based on our stock availability.

Junction Elements for A.C. Electric Motor Compact Mounting Style for Power Module Type DL

F99

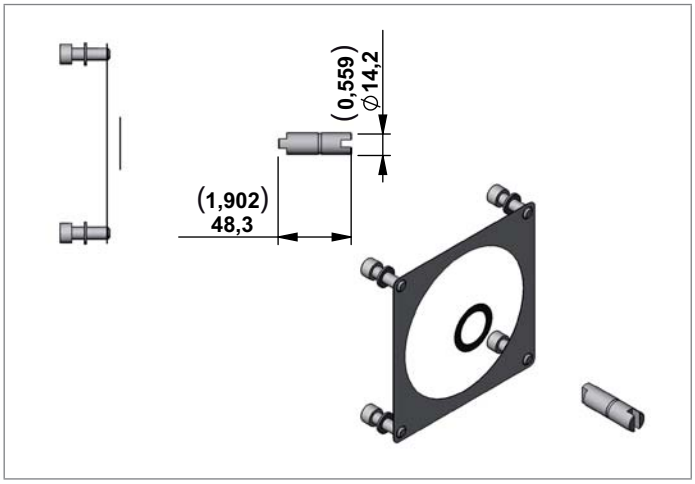

TR08

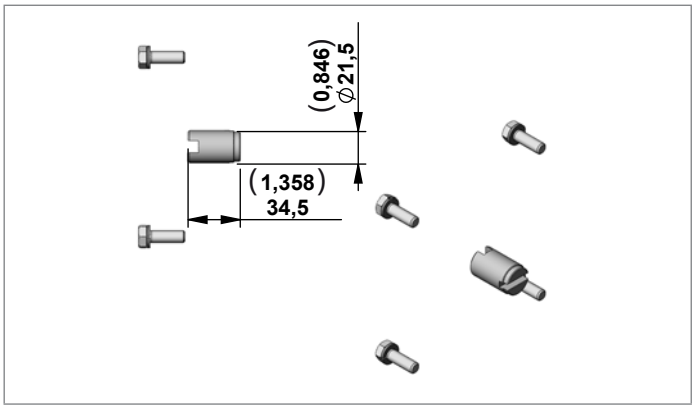

Junction Elements for manifolds MT

Code	Motor Codes	Size IEC	Type	Material Number
F99	724-724T-725-725T-745	71	K01K3970TR105	R932001934
TR08	826-826T-827-827T	80	K01KE970TR008	R932001900

Central Manifold DL

66

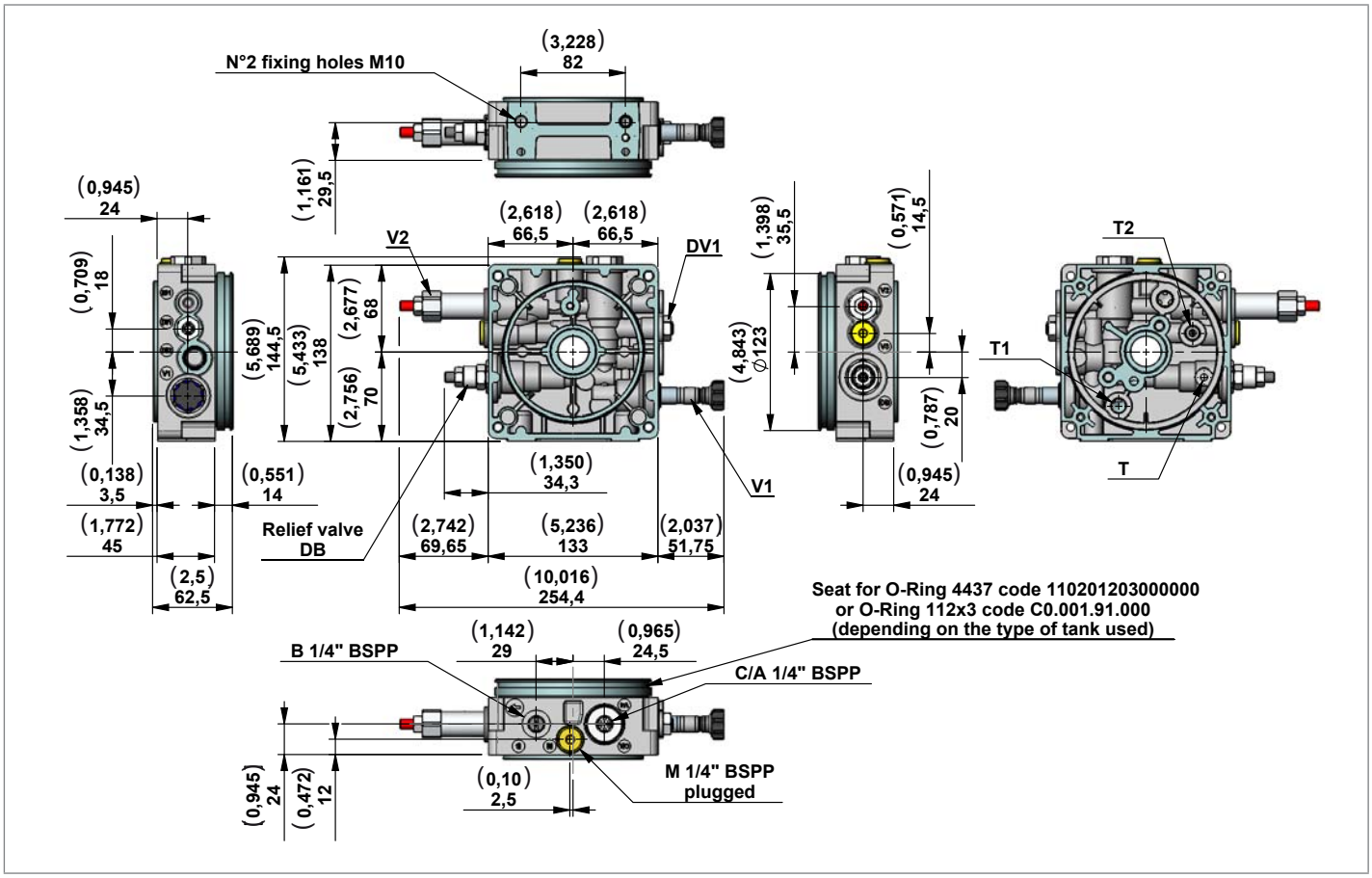

Manifold Hydraulic Diagram

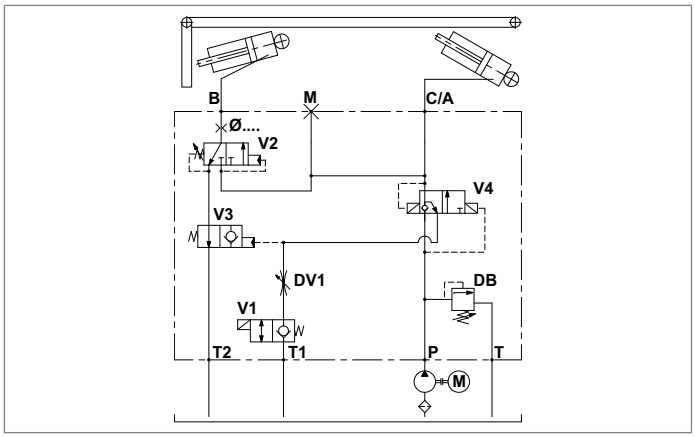

Manifold code with Sequence Valve pressure range	Pressure range Relief Valve DB bar (psi)	Pressure range Sequence Valve V2 bar (psi)	Type	Material Number
66/12	80-250 (1160-3626)	30-120 (435-1740)	766C120NG	R930052303
66/17	80-250 (1160-3626)	60-170 (870-2465)	766C150NG	R930052304

67

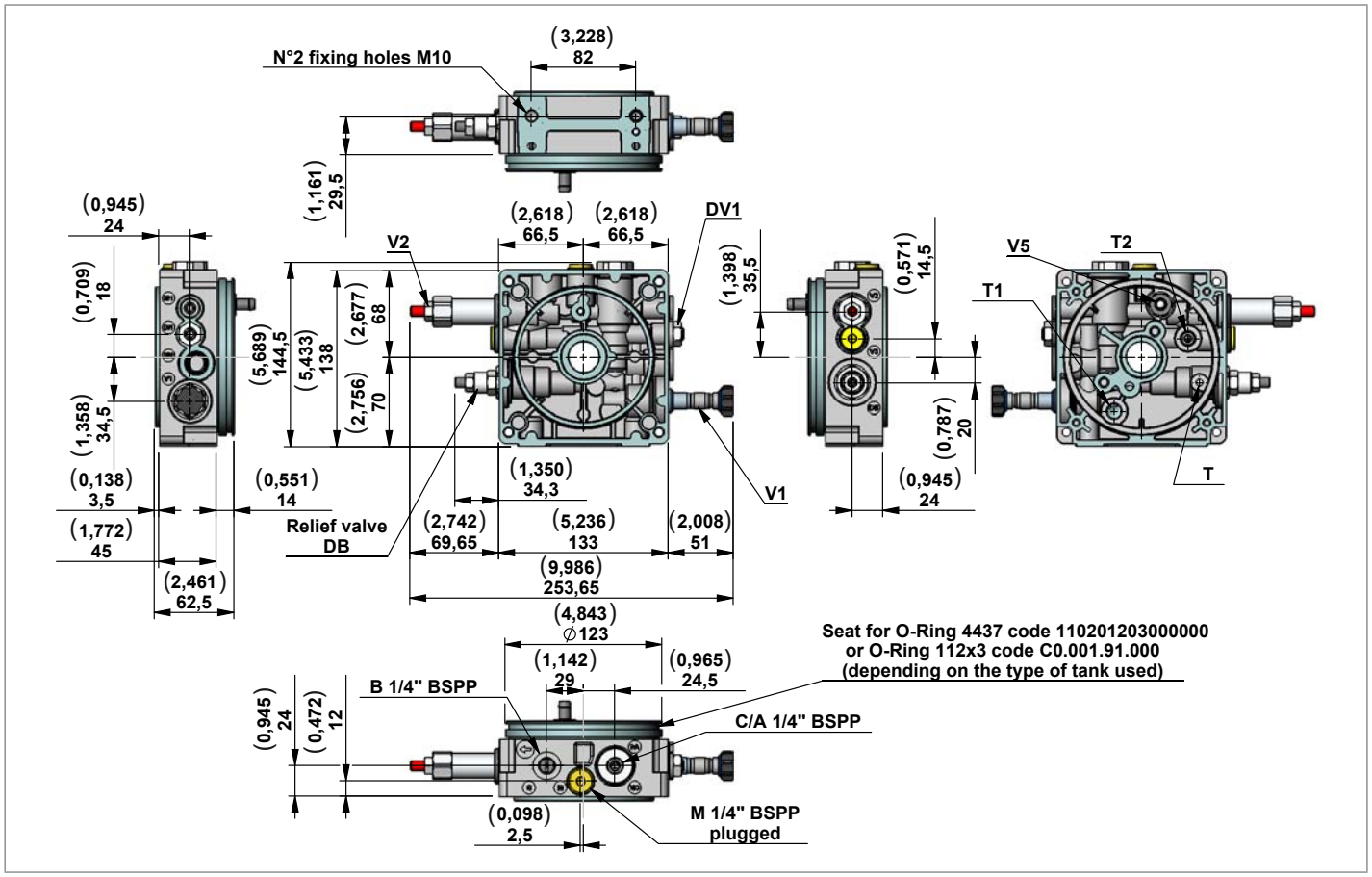

Manifold Hydraulic Diagram

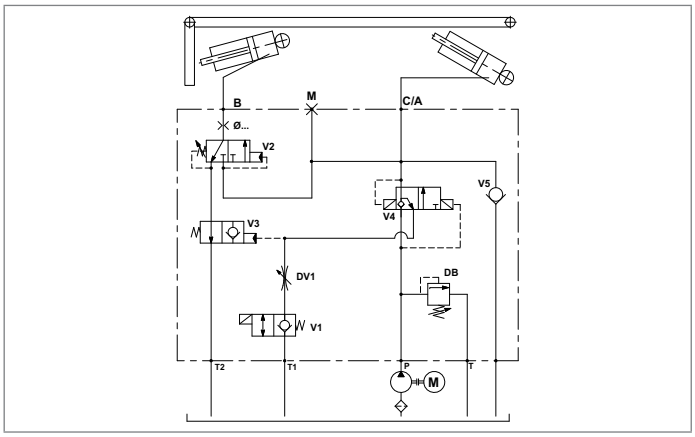

Manifold code with Sequence Valve pressure range	Pressure range Relief Valve DB bar (psi)	Pressure range Sequence Valve V2 bar (psi)	Type	Material Number
67/12	80-250 (1160-3626)	30-120 (435-1740)	767C120NG	R930052305
67/17	80-250 (1160-3626)	60-170 (870-2465)	767C150NG	R930052306

68

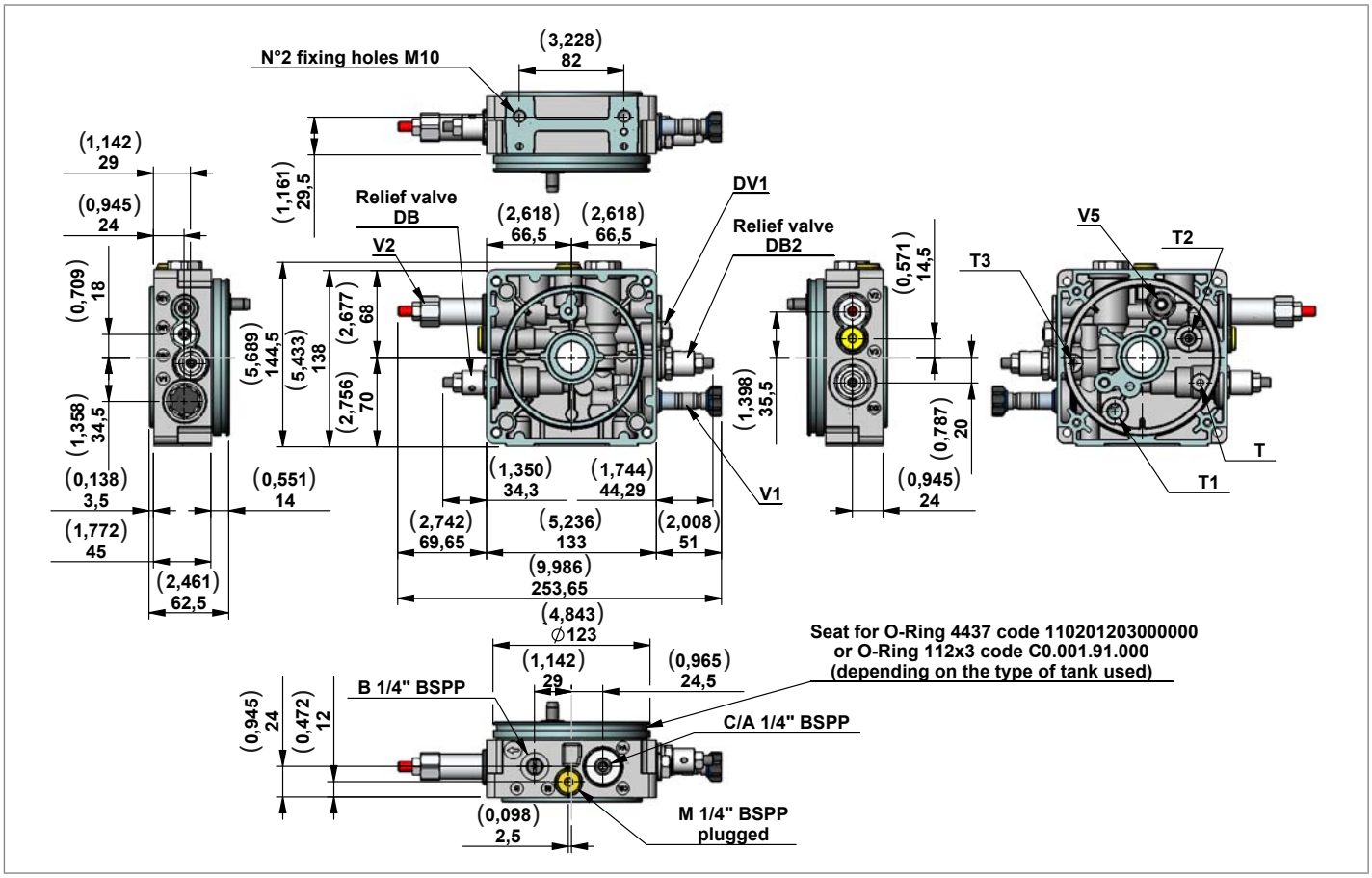

Manifold Hydraulic Diagram

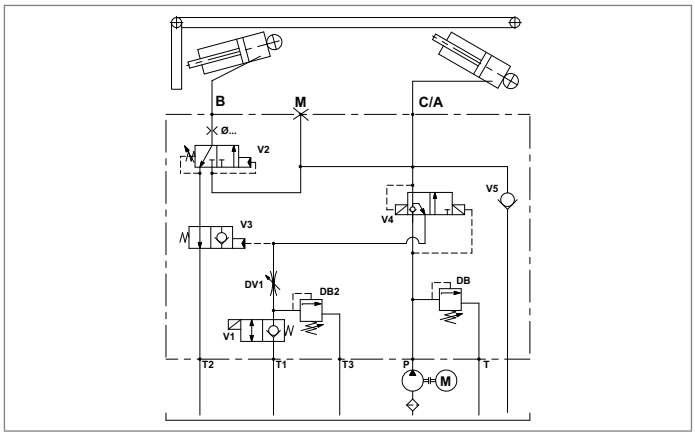

Manifold code with Sequence Valve pressure range	Pressure range Relief Valve DB bar (psi)	Pressure range Relief Valve DB2 bar (psi)	Pressure range Sequence Valve V2 bar (psi)	Type	Material Number
68/12	80-250 (1160-3626)	30-120 (435-1740)	30-120 (435-1740)	768C120NG	R930052307
68/17	80-250 (1160-3626)	30-120 (435-1740)	60-170 (870-2465)	768C150NG	R930052309

Dimensions [mm (inches)]

73

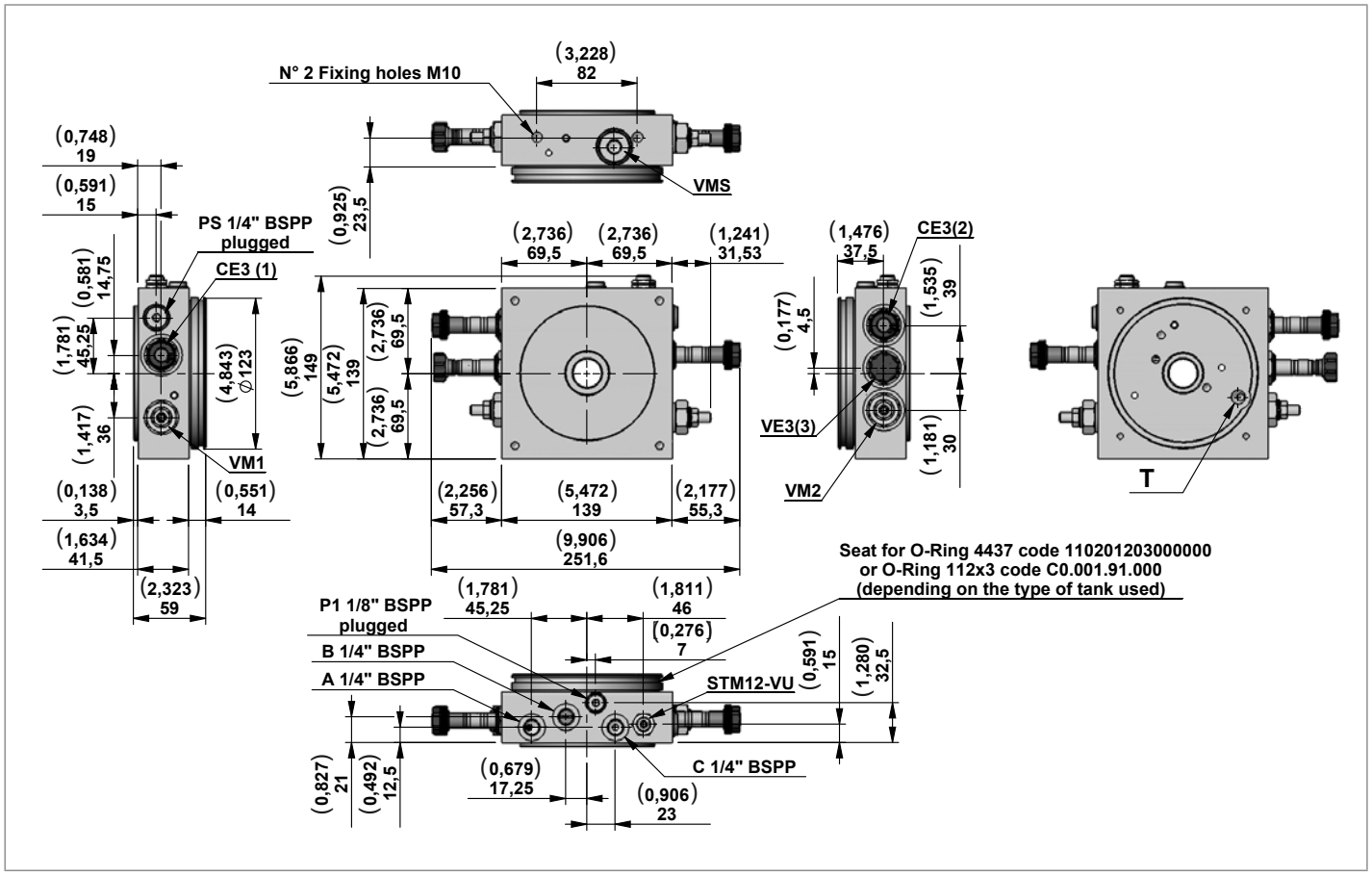

Manifold Hydraulic Diagram

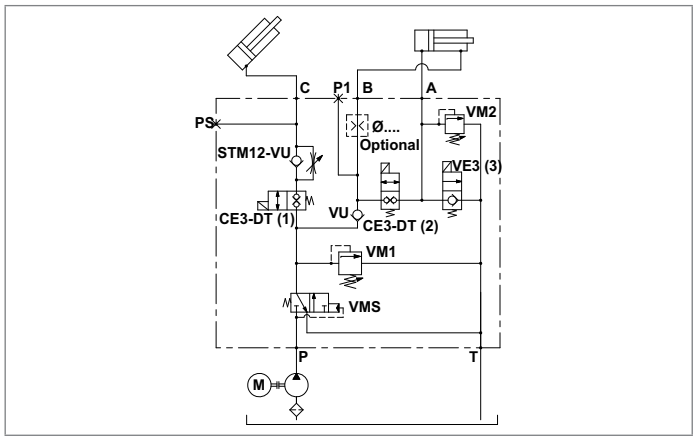

Manifold code with Relief Valve pressure range	Pressure range Relief Valve VM1 bar (psi)	Pressure range Relief Valve VM2 bar (psi)	Type	Material Number
73/20	105-210 (1523-3046)	105-210 (1523-3046)	773C150NG	R930052310

74

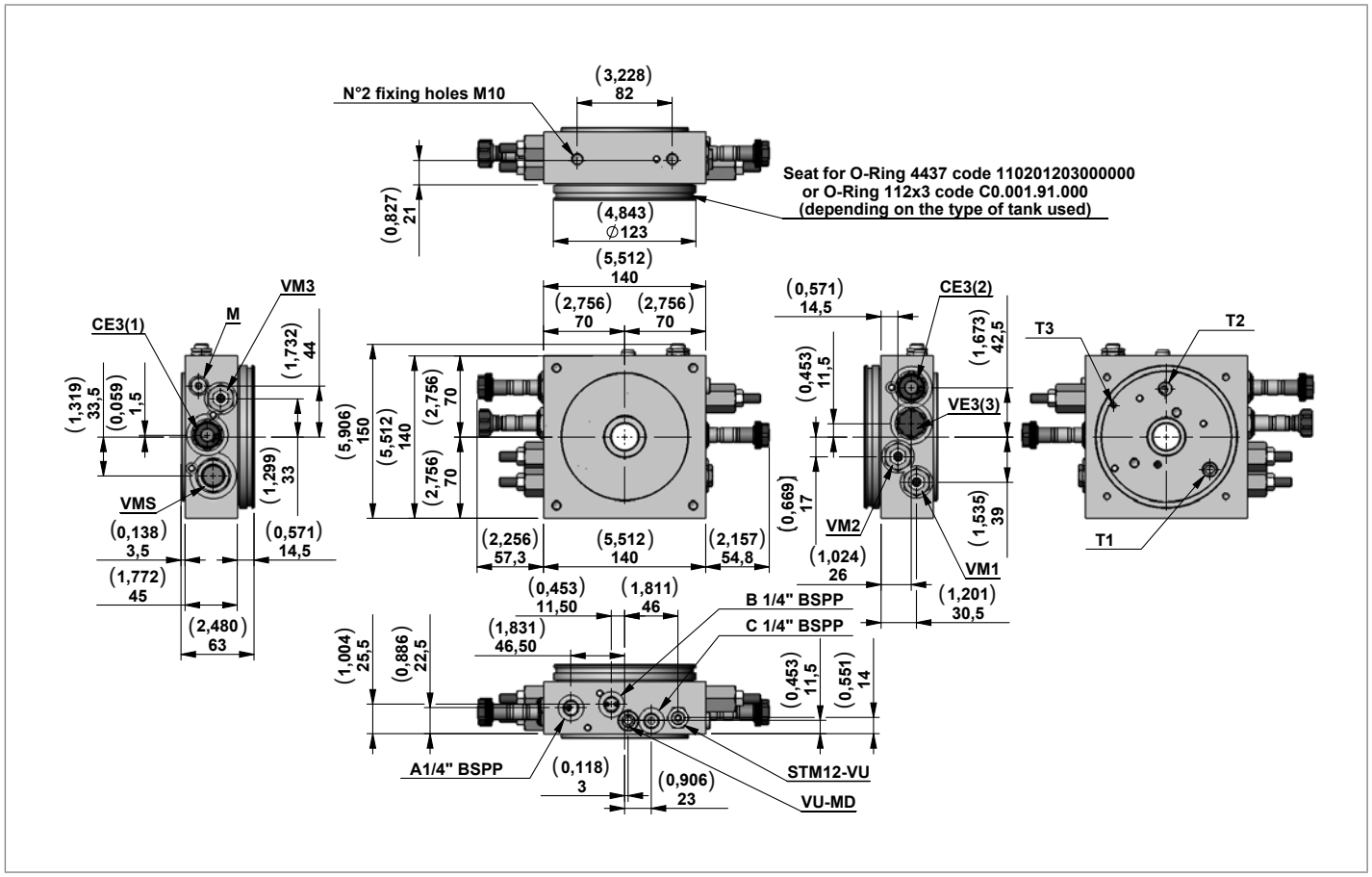

Manifold Hydraulic Diagram

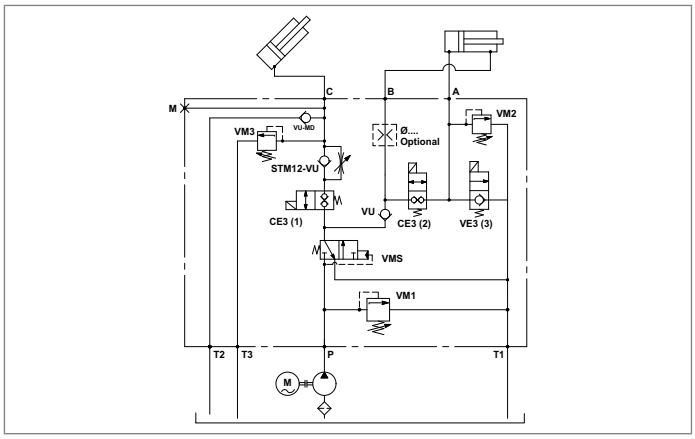

Manifold code with Relief Valve pressure range	Pressure range Relief Valve VM1 bar (psi)	Pressure range Relief Valve VM2 bar (psi)	Pressure range Relief Valve VM3 bar (psi)	Type	Material Number
74/20	60-220 (870-3191)	60-220 (870-3191)	60-220 (870-3191)	774C150NG	R930052311

Flow Restrictor

Flow restrictor for manifold code 66-67-68

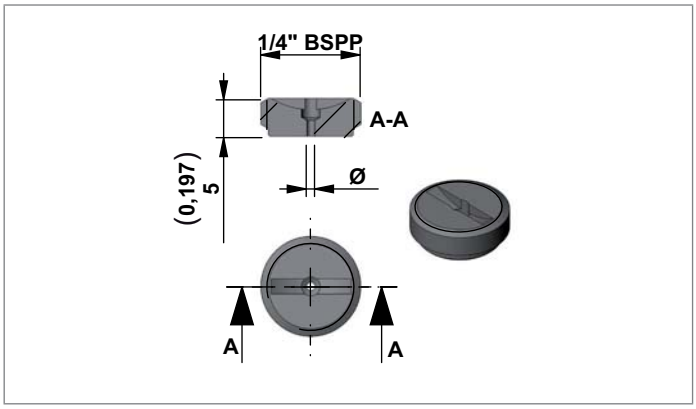

Code	Ø of flow restrictor mm	Material Number
G00	Without flow restrictor	
G07	0,7	R930046181
G08	0,8	R930051905
G11	1,1	R930046182
G13	1,3	R930046183
G15	1,5	R930046184
G18	1,8	R930046185

Flow restrictor for manifold code 73-74

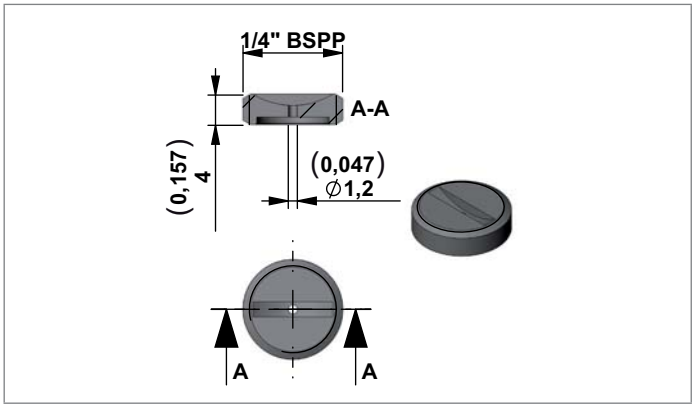

Code	Ø of flow restrictor mm	Material Number
G00	Without flow restrictor	
G12	1,2	R930046187

Coil

S-CE – 18W – ED 100%

DIN 43650 - ISO 4400 IP65 with connector assembled

Coil protection: IXEF for Heat insulation class H [180°C (356°F)].

Solenoids “S-CE” (18 W) are designed for continuos duty ED100%.

Ambient temperature range : -15°/+40°.

Inlet voltage fluctuations must not exceed +/- 10% of nominal voltage to obtain correct operations and long life coils.

Protection degree: see tables below.

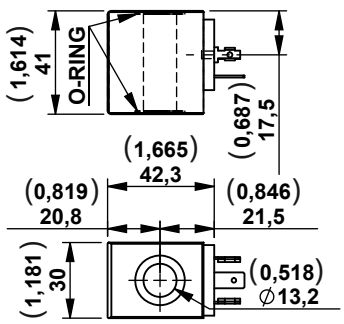

Code	Voltage	Heat Insulation class	Type	Material Number
OBH	12 Volts D.C.	H [180°C (356°F)]	C166462OB1	R932000819
OCH	24 Volts D.C.	H [180°C (356°F)]	C166462OC1	R932000820
OV	24 Volts RAC	H [180°C (356°F)]	C166462OV1	R932000821
OZ	220 Volts RAC	H [180°C (356°F)]	C166462OZ1	R932000822

Dimensions [mm (inches)]

Connectors

CONNECTOR IP67 - EN175000 (DIN 4350-A) / ISO 4400

Ambient temperature - Standard		°C (°F)	- 20 to + 60 (-4 to +140°F)
Type of protection according to DIN 40050			IP67 with cable socket mounted and locked
Operating voltage		V	Choose the proper ordering code according to the circuit
Maximum operating current	Standard	A	16
	With rectifier	A	1
Number of pins			2 + PE
Clamping range for cables having an outer diameter of		mm (inch)	5, up to 10 (0,2 up to 0,4)
Cable entry			Pg9 / Pg11 (unified)
Maximum cable cross-section		mm^2 ($inch^2$)	1.5 (0,002)

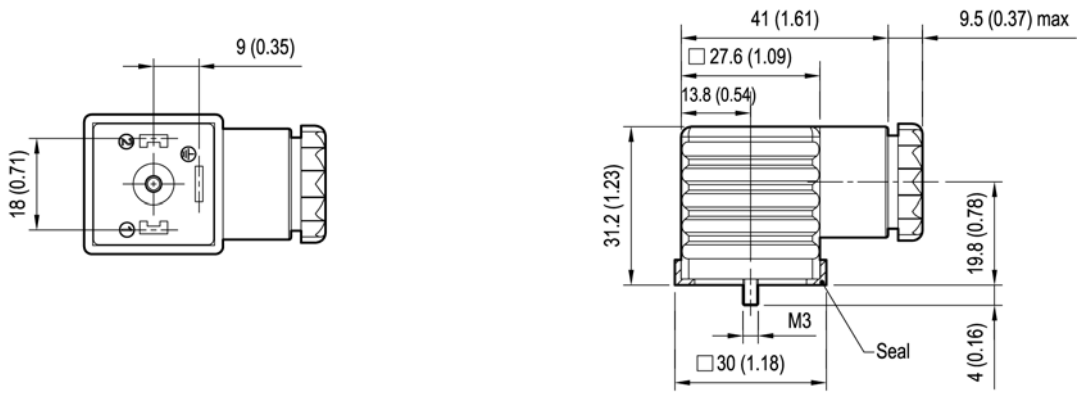

Standard Circuit

Code	Colour	Cable entry	Type	Material Number
WC	Without Connector			
CS	black	Pg9 / Pg11	OD016901000000	R934004344

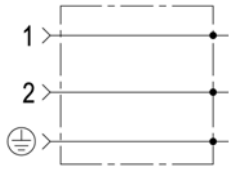

Circuit with VDR + Wave Rectifier

Code	Voltage V		Diode Capacity I max	Colour	Cable entry	Type	Material Number
	AC	DC					
CR	230	/	1A	black	Pg9 / Pg11	OD01690201OZ00	R934004353

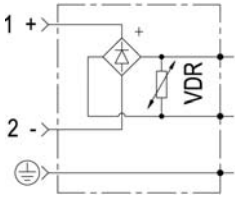

Note
Diode with capacity max 1 Amp.

Gear Pumps

Gear Pumps Group 1 for DL

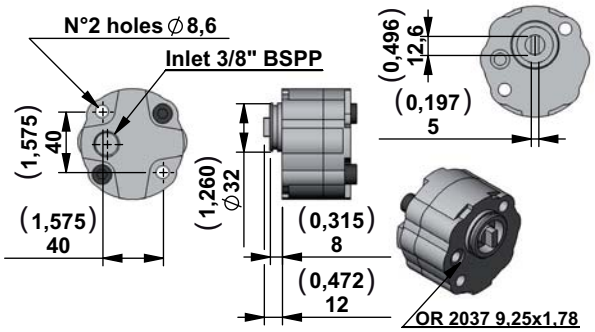

P2: intermittent max Pressure.
P3: peak Max Pressure (max 2 seconds)

Code	Displacement cc/rev	Flow at 1500 rpm l/min (gpm)	P2 bar (psi)	P3 bar (psi)	Type	Material Number
11LD	1,2	1,8 (0,48)	210 (3046)	230 (3336)	K01CV640070HP	R930051417
12LD	1,7	2,55 (0,67)	210 (3046)	230 (3336)	K01CV640080HP	R932010351
13LD	2,2	3,3 (0,87)	210 (3046)	230 (3336)	K01CV640090HP	R932010352
14LD	2,6	3,9 (1,03)	210 (3046)	230 (3336)	K01CV640100HP	R930051433
15LD	3,2	4,8 (1,27)	210 (3046)	230 (3336)	K01CV640110HP	R930051437

Note
All pumps have anti-clockwise rotation.

Oil Tanks for DL

Technical Data for Plastic Tanks

Temperature range	°C (°F)	-15....+70 (5....158)
Materials		PE=Polyethylene - PP=Polypropilene
Seal		For tanks codes S335-S336-S337-S338 is necessary to use the O-RING Ø112x3 Code: C000191000 R-Number:R932000190. For all the other tanks except the codes above is necessary to use the O-RING 4437 (Ø110,7x3,53) Code:110201203000000 R-Number:R932000188

Code	Tank capacity l (USgal)	Useable capacity l (USgal)	L mm (inch)	Material	Type	Material Number	
S335	1,0 (0,26)	0,7 (0,18)	140 (5,51)	PP	K01K3976SE372	R932002035	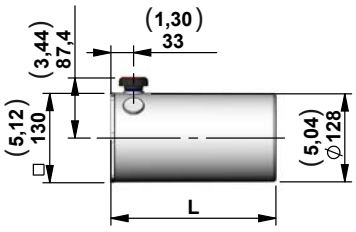 For this tanks is necessary to use the O-RING Ø112x3 code: C000191000 R-Number: R932000190
S336	1,8 (0,48)	1,2 (0,32)	180 (7,09)		K01K3976SE373	R932002036	
S337	2,5 (0,66)	1,7 (0,45)	240 (9,45)		K01K3976SE374	R932002037	
S338	3,0 (0,79)	2,3 (0,61)	285 (11,22)		K01K3976SE375	R932002038	
S247	1,8 (0,48)	1,6 (0,42)	170 (6,71)	PE	K01K3976SE271	R932002017	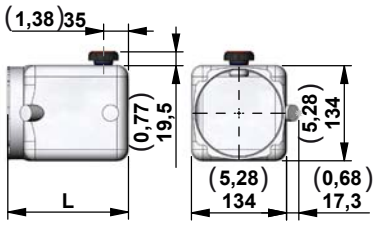
S248	2,5 (0,66)	2,2 (0,58)	240 (9,45)		K01K3976SE272	R932002018	
S343	5,0 (1,32)	3,8 (1,00)	230 (9,05)	PE	K01K3976SE380	R932002039	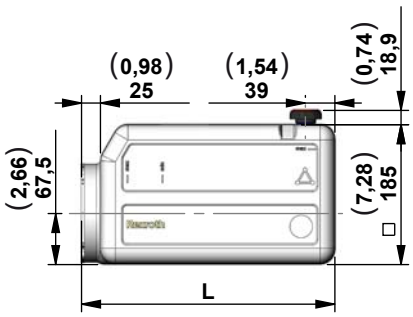
S331	5,0 (1,32)	3,8 (1,00)	230 (9,05)	PE Black	K01K3976SE368	R932007872	
S413	7,0 (1,85)	5,5 (1,45)	310 (12,20)	PE	K01K3976SE439	R932007873	
S414	7,0 (1,85)	5,5 (1,45)	310 (12,20)	PE Black	K01K3976SE440	R932007874	
S415	8,0 (2,11)	6,5 (1,72)	335 (13,19)	PE	K01K3976SE441	R932006036	
S416	8,0 (2,11)	6,5 (1,72)	335 (13,19)	PE Black	K01K3976SE442	R932007875	
S374	5,0 (1,32)	4,0 (1,06)	219 (8,62)	PE	K01K3976SE415	R932002042	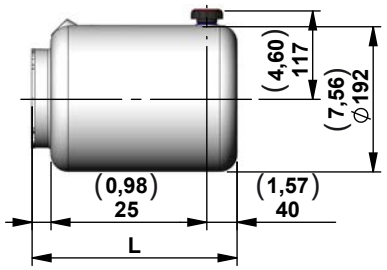
S376	7,0 (1,85)	5,4 (1,43)	271 (10,67)		K01K3976SE417	R932002044	
S378	8,0 (2,11)	6,6 (1,74)	323 (12,72)		K01K3976SE419	R932002046	
S380	11,0 (2,91)	9,6 (2,54)	453 (17,83)		K01K3976SE421	R932002048	

Assembly Kit for Plastic Tank - DL

Oil Tank	Code for DL	Material Number
S335 - S336 - S337 - S338	K2501VT016	R932007391
S247 - S248	K2501VT015	R932008244
S343 - S331 - S413 - S414 - S415 - S416 - S374 - S376 - S378	K2501VT026	R930053718

Please make sure that the tank and motor are mounted correctly

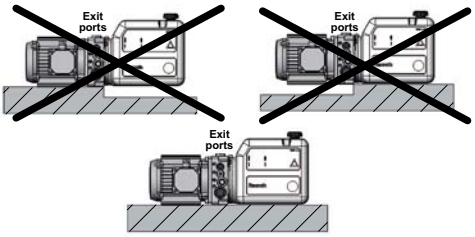

Oil Tanks for DE

Technical Data for Plastic Tanks

Temperature range	°C (°F)	-15....+70 (5....158)
Materials		Steel
Colors		Black paint finish
Seal		For all the steel tanks is necessary to use the O-RING 4437 (Ø110,7x3,53) Code: 110201203000000 R-Number: R932000188

Code	Tank capacity l (USgal)	Useable capacity l (USgal)	L mm (inch)	Type	Material Number
S03SD	5,0 (1,32)	4,0 (1,06)	219 (8,62)	K01K3976SE005SD	R932007901

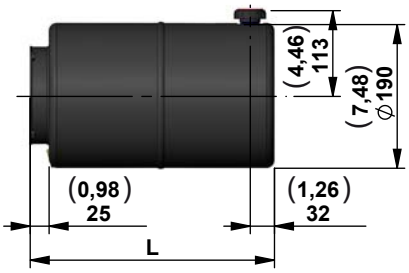

Mounting position

Mounting position	
Code	**Image**
01	1
02	2

1

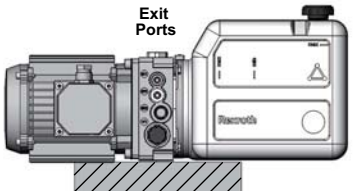

2

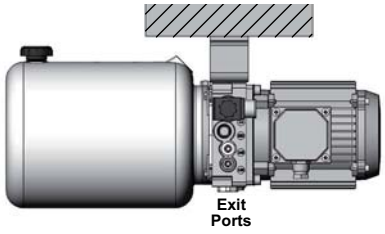

Terminal Box Position for A.C. Motors

Terminal Box Position for A.C. Motors	
Code	**Image**
–	6
M2	7
M3	8
M4	9

6-Standard

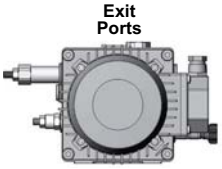

7

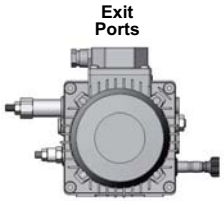

8

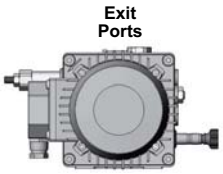

9

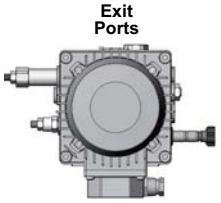

Mounting Brackets

Code	Central manifold	Type	Material number	
G80	DL	K01F331514000	R932009395	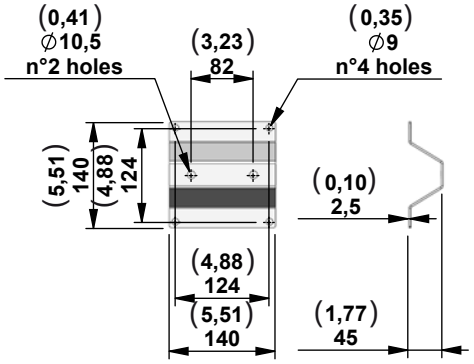

Code	Central manifold	Type	Material number	
G87	DL	K01K331523000	R932010187	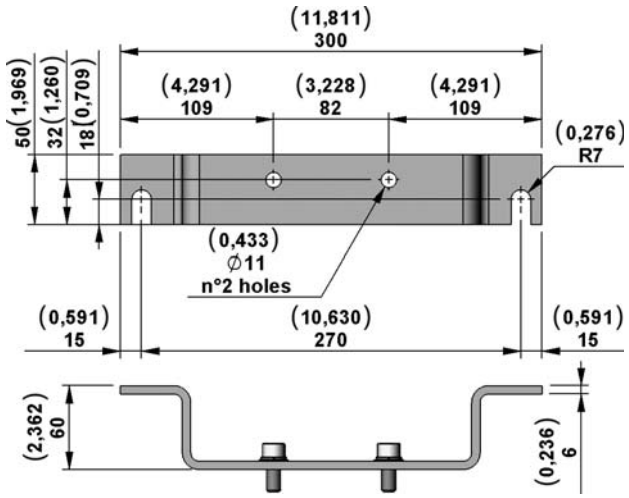

Compact power modules
MT series

Contents

Ordering details	2
General technical data for compact power module MT series	4
A.C. Electric Motor Compact Mounting Style for Power Module Type MT	6
Central Manifold MT	8
Gear Pumps	9
Oil Tanks for MT	10
Mounting position	14
Mounting Brackets	15
Modular Stackable Elements	16
Coils	28
Connectors	29
Accessories	30

Ordering details

01	02		03		04		05		06		07		08		09		10		11
MT	_	-	____	-	____	-	__/__(___)	-	____	-	_____	-	__/__/__/___	-	____/____/____	-	____/____	-	____/____

Family

01	Power module type	**MT**

Power module type of motor

02	Without motor	**0**
	With 3ph motor	**2**

A.C. Electric motor

03	In the Power Module MT type is possible to assemble every code of AC Compact Mounting Style motor shown in the catalogue. (See page 6)	

Junction Elements

04	MT (see page 7)	

Central Manifold with Pressure range Relief Valve + Request Setting of the Relief Valve in Bar

05	Select the required pressure range of the Relief valve and put the required setting in bar beetwen bracket. (See page 8)	

Gears pump

06	Select the required pump. (See page 9)	

Oil Tank

07	Select the required Oil Tank. (See page 10 to 13)	

Mounting Position and Mounting Brackets

08	Select the required working position of the Power Module and Oil Filler cap in case of mounting position V1. If needed select the Mounting Bracket. (See page 14 to 15)	

Modular Stackable Elements

09	If needed select the additional Modular Stackable Elements. (See page 16 to 27)	

Coil Voltage and Connector

10	In case of selection of modular stackable elements with Solenoid Valve choice the required coil Voltage and the required Connector. (See page 28 to 29)	

Accessories

11	If needed select the additional Accessories. (See page 30 to 31)	

Example of Ordering Details for Compact Power Modules MT

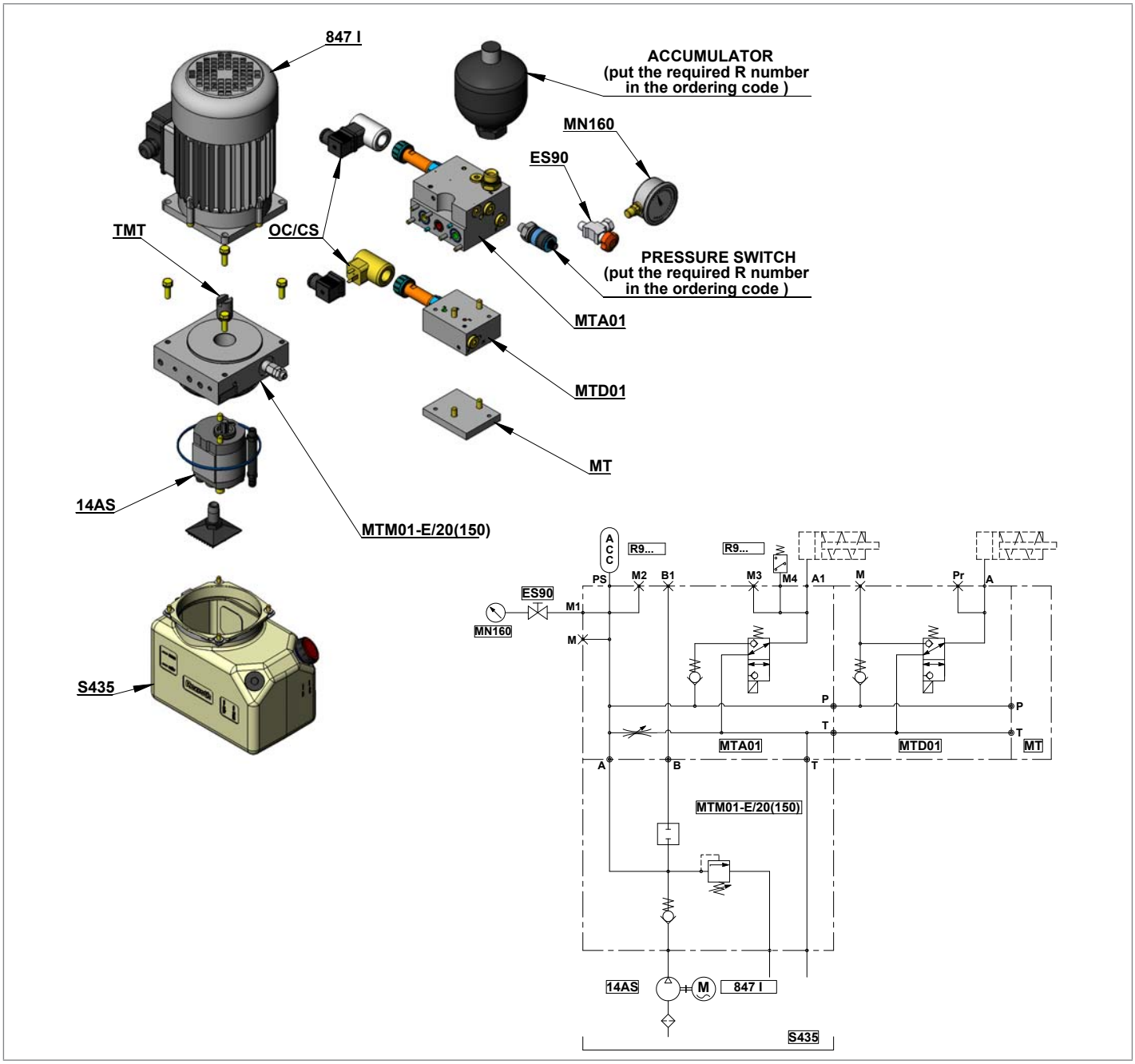

Ordering Details for Compact Power Modules with AC Motor

01	02	03	04	05	06	07	08	09	10	11
MT	**2**	**- 847 I**	**- TMT**	**- MTM01-E/ 20(150)**	**- 14AS**	**- S435**	**- V1/M3**	**- MTA01/MTD01/ MT**	**- OC/CS**	**- ES90/ MN160/ R9.../R9...**
Power module type	Power module type of motor	AC electric motor	Junction element	Central manifold with pressure range relief valve + request setting of the relief valve in bar between brackets	Gears pump	Oil tank	Mounting position and mounting brackets	Modular stackable elements	Coil voltage and connector	Accessories

General technical data for compact power module MT series

With this catalogue DCOC introduces the „compact power module“ (CPM) MT type developed for clamping operation in Machine Tool. The CPM is an assembly of electric motor, central manifold with valves, pump, oil tank and a few modular elements able to cover the most parts of the schemes needed for this kind of application. The MT model is characterized by low noise level and a very space-saving design due to the direct assembly of the motor and modular elements to the central manifold.

Hydraulic details

Max Flow rate Q	up to 20 l/min
Max Intermittent pressure P2	up to 250 bar
Max Peak pressure P3	up to 270 bar (with a reduced number of cycles depending of pump size)
AC Motors power range	0.55 - 2.2 kW
AC Motors protection class	IP54
Gear pumps displacement	1.25 - 7.4 cc
Tank volume	up to 20 L
Average duty cycle	S3 (intermittent operation) 60 % (except for the 2.2 kW)

Power module selection

Choose the circuit which meets your application requirements.
Take note of all dimensions resulting from the basic components chosen for your application.
NOTE: dimensions may vary slightly and should be confirmed by DCOC if the assembly is to be installed in a space with narrow clearance.
The tank capacity and the tank dimensions need to be large enough to assure proper pump suction: there must always be a reserve of oil in the tank when all cylinders are fully extended and avoid overflow when cylinders are fully retracted.
The tank must be evaluated also for best separation of air from oil, and for settling down oil contamination. It should be placed in a space with, at least, natural ventilation and it should permit enough heat dissipation to prevent high fluid temperature.
Select the electric motor by evaluating the power needed and the motor compliance with the heat developed during the expected run time (or „duty cycle“).

Hydraulic fluid for compact power module

Mineral oil based hydraulic fluids suitable for hydraulic systems can be used; they should have physical lubricating and chemical properties as specified by:

MINERAL OIL BASED HYDRAULIC FLUIDS HL (DIN 51524 part 1)
MINERAL OIL BASED HYDRAULIC FLUIDS HL P(DIN 51524 part 2)

For use of environmentally friendly fluids please consult DCOC.

Fluid viscosity, temperature range of the operating fluid, ambient temperature

The fluid viscosity should remain within the range 10 to 300 cSt (centistokes); recommended 15 to 120 cSt .
Permissive cold start viscosity is maximum 2000 cSt .
The fluid temperature should remain within the range -15 °C and 70 °C (5 °F and 158 °F).
Ambient temperature -15 °C +40 °C (5 °F and 104 °F).

Fluid cleanliness requirements and maintenance

We recommend a cleanliness of the operating fluid according to ISO 4406 Class 20/18/15 or cleaner.
All components of the hydraulic circuit, including hoses and actuators, must be flushed and cleaned before assembling, because the compact power module has a suction filter only.
The hydraulic fluid should be replaced after the first 50 hours, and then every 1000 hours, or, at least, once a year.

Power module installation

The mounting position is basically un-restricted; just avoid installations that could compromise the pump suction. It is recommended to support the power module on vibration dampening blocks when the mounting structure is expected to vibrate.
Do not assembly the CPM to moving part. Finish required on mounting surface 0.3 mm over 140 mm lenght.

Wiring and starting-up

The wiring between power source and electric motor should be selected in order to avoid excessive voltage drop. It is strictly forbidden to allow the backwards rotation of the pump even at the first starting: to prevent reverse rotation, the wiring polarities must be correctly connected.
Caution: when energized, the surface temperature of the electric motor could reach temperature levels of 60 - 80 °C (140 - 176 °F): care should be taken to avoid any accidental contact of people with the motor surface.

A.C. motors
The tolerances on the nominal voltage are:
Three phase motor: 230 - 400V +/-10 %.
Protection degree : IP54 (protection against dust and water splash).
Insulation class: F (155 °C) (311 °F).
All motors are aluminum alloy die cast without painting.

Central manifolds
The Central Manifold is made of extruded aluminum alloy AL 7020 (AlZn4.5Mg UNI9007/1). The validation of the Central Manifold follows a life-test with 250 bar (625 psi) pulsed pressure repeated for 500.000 cycles.

External gear pumps
All the pumps are pressure compensated with cast iron covers to guarantee the best efficiency and durability. The splined shaft guarantees a big number of start and stop cycles without failure or wearing. The validation of the pumps follows a life-test at P2 (intermittent max pressure) pulsed pressure repeated for 500.000 cycles.

Oil tanks
In this catalogue you will find a wide selection of plastic tanks available as a standard product. Plastic tanks are obtained in one piece in order to avoid welded parts that are weak points at extreme temperature and vibrations. Plastic tanks are suitable for operating temperature range -15 °C / +70 °C (5 °F / 158 °F).
Note: even if the plastic tank mounting system is designed to avoid oil leakage the tank must be securely anchored when subject to shocks and heavy vibrations. Please check that the anchorages do not stress or deform the tank.
Steel tanks are available on request and with a minimum of quantity. Please contact our Sales Department.

Modular stackable elements
Our modular system offers a wide range of standardised elements.
All the Modular Elements are made of extruded aluminum alloy AL 7020 (AlZn4.5Mg UNI9007/1). In the catalogue you will find a selection of the main used models.
The validation of the Modular Elements follows a life-test with 250 bar (625 psi) pulsed pressure repeated for 500.000 cycles.
Note: To reduce the complexity of the system and optimize the available space, special Modular Elements can be designed and manufactured following the customers needs. In this case please contact our Sales Department.

European machine directive 2006/42/CE
According to the Machine Directive2006/42/CE, a complete power module, as described in paragraph 15 and made available to the European market, enters into the definition of „partly completed machinery“.
Instead, the power module sub-assemblies (motor, pump, reservoir, central manifold,...), when not assembled into a complete power pack, are considered „components“ which can be employed in a „machinery“ or a „partly completed machinery“. In this case, the DCOC components and sub-assemblies must be fitted in compliance Instead, the power module sub-assemblies (motor, pump, reservoir, central manifold,...), when not assembled into a complete power pack, are considered „components“ which can be employed in a „machinery“ or a „partly completed machinery“. In this case, the DCOC components and sub-assemblies must be fitted in compliance with all the relevant technical data sheet applicable to the product, and shall not be operated, adjusted or disassembled before the complete machinery where they are incorporated has been declared to be in compliance with the Machine Directive 2006/42/CE.

Note
All the components shown in the catalogue ARE NOT suitable for use in potentially explosive atmosphere.

Technical information
Below you will find the most common equations used in hydraulics:

	Common Units	Symbols	Equations
Flow	l/min	Q	$Q=\frac{D \times n}{1000} \times 0{,}95$
Operating pressure	bar	P	$P=\frac{F}{0{,}1 \times A}$
Internal diameter hydraulic cylinder	mm	d	–
Area of hydraulic cylinder	mm^2	A	$A=\frac{\Pi \times d^2}{4}$
Piston force	N	F	–
Drive shaft	rev/min	n	–
Power requirement for motor	kW	N	$N=\frac{P \times Q}{612}$
Pump displacement	cm^3/rev	D	–
Torque requirement	Nm	M	$M=\frac{D \times d^2}{62{,}8 \times 0{,}87}$

Dimensions [mm (inches)]

A.C. Electric Motor Compact Mounting Style for Power Module Type MT

These motors are designed to reduce the overall dimensions and the cost of the junction elements.

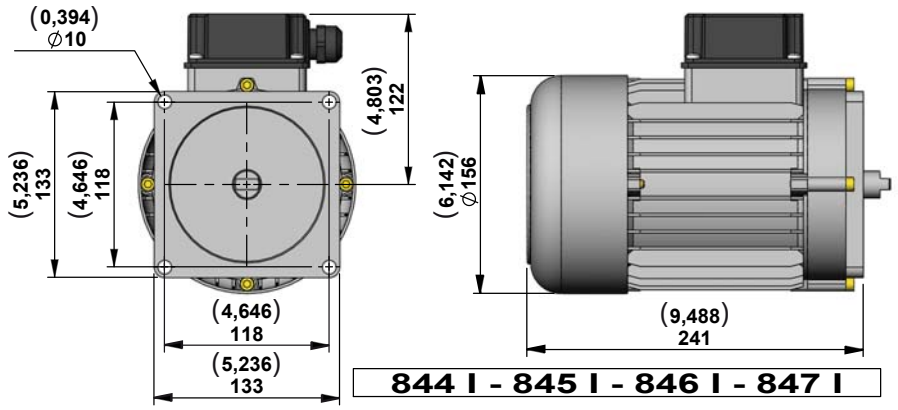

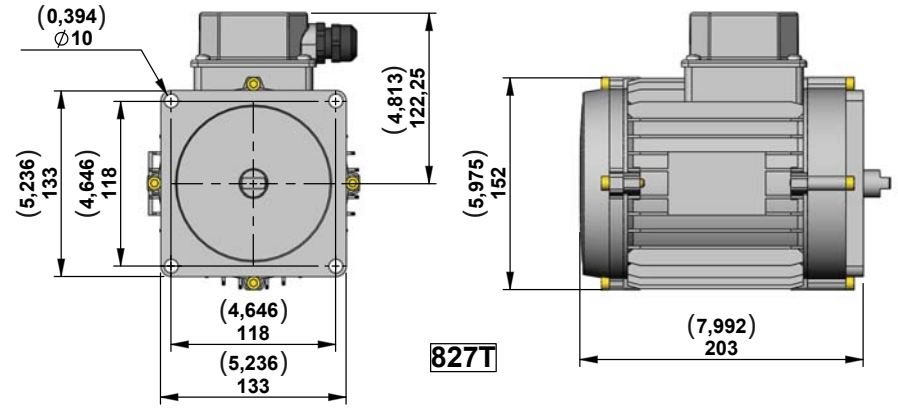

Three Phase Current Motors 230/400V 50Hz
IP54 Size IEC 80

Code	Type	Material Number	Power (kW)	Power (hp)	Poles	Rpm at 50Hz	Duty Cycle	Thermal Switch
844 I	C1622S1457	C1622S1409	0,55	0,75	4	1450	S3 60 %	no
845 I	C1622S1456	R932010924	0,75	1,00	4	1450	S3 60 %	no
846 I	C1622S1453	R932010923	1,10	1,50	4	1450	S3 60 %	no
847 I	C1622S1370	R932000419	1,50	2,00	4	1450	S3 60 %	no
827 T	C1622S1409	R932007620	2,20	3,00	2	2900	S3 15 %	yes

The motors shown in these tables are a selection of our range.
In case of needs of different technical characteristics PLEASE CONTACT OUR SALES DEPARTEMENT.

NOTE
The electric motors shown in this pages are delivered by different certified suppliers.
This means the indicated dimensions could change a little, depending on which manufacturer will be assembled. On the CPM the choice of the manufacturer is based on our stock availability.

Junction Elements for A.C. Electric Motor Compact Mounting Style for Power Module Type MT

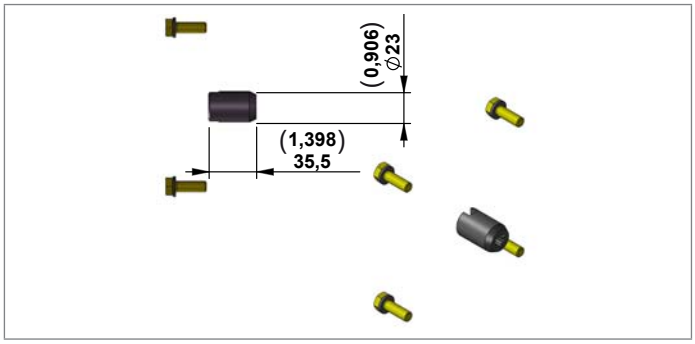

Junction Elements for manifolds MT

Code	Motor Codes	Size IEC	Type	Material Number
TMT	844 I - 845 I - 846 I - 847 I - 827 T	80	K01K3970TR114	R932011170

Central Manifold MT

MTM01 / MTM01-E

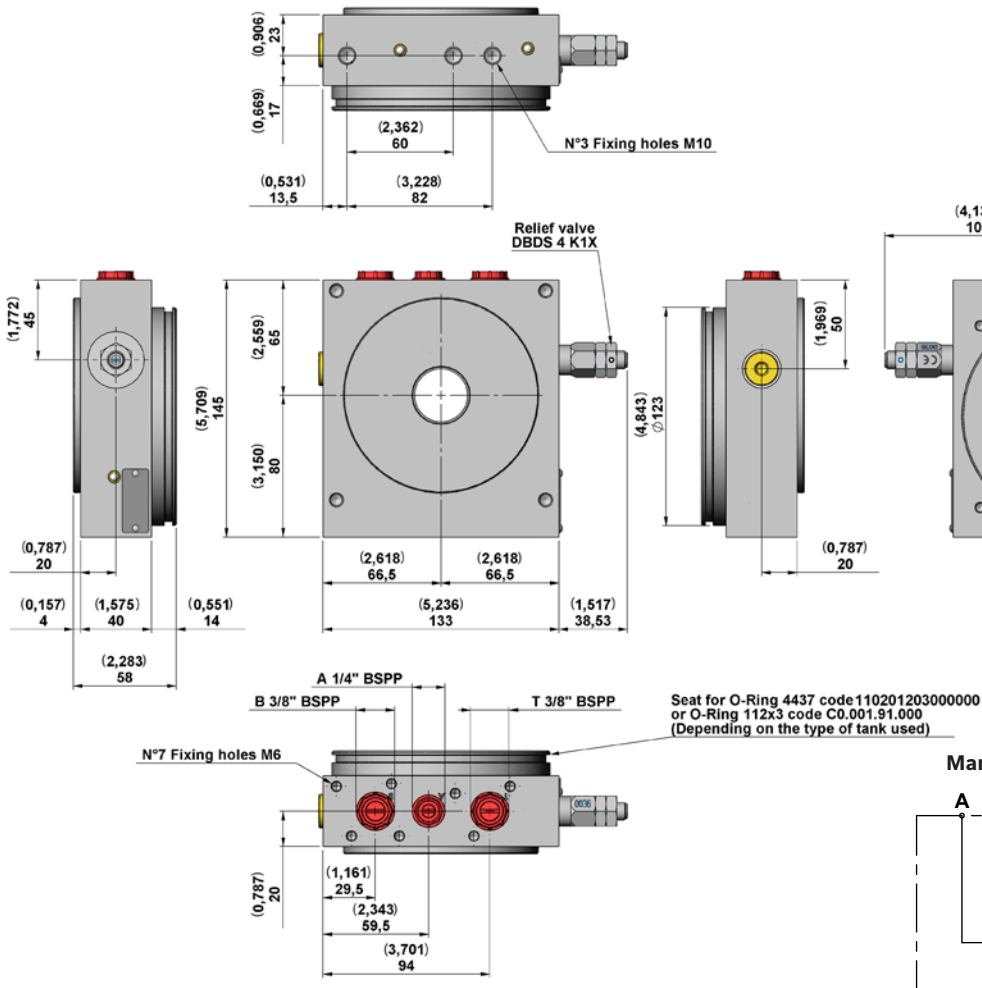

Note
For relief valve DBD4 check data sheet RE25710.

Manifold Hydraulic Diagram

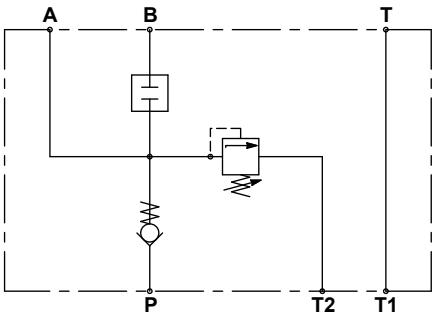

View Manifold Tank side

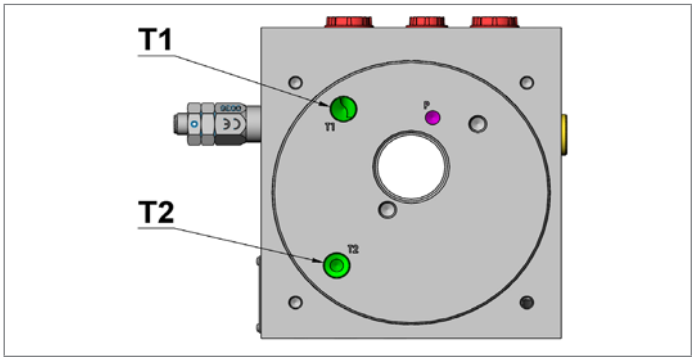

Manifold Code with Relief Valve Pressure Range	Pressure Range bar (psi)	Type	Material Number
MTM01/10	5-100 (72,5-1450)	K397301001	R932007800
MTM01/10	40-200 (580-2901)	K397301002	R932007801
MTM01/10	100-315 (1450-4568)	K397301003	R932007802
MTM01-E/10[1)]	5-100 (72,5-1450)	–	–
MTM01-E/10[1)]	40-200 (580-2901)	–	–
MTM01-E/10[1)]	100-315 (1450-4568)	–	–

1) With type tested safety relief valve according to PED 97/23/EC

Gear Pumps

Gear Pumps Group 1 with Splined Shaft

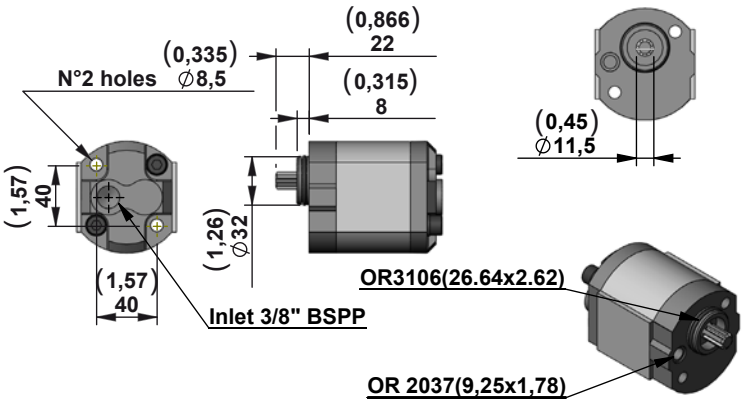

Spline shaft DIN5482
B12x9 - Z=6

P2: intermittent max Pressure.
P3: peak Max Pressure (max 2 seconds)

Code	Displacement cc/rev	Flow at 1400 rpm l/min (gpm)	P2 bar (psi)	P3 bar (psi)	Type	Material Number
11AS	1,25	1,8 (0,48)	250 (3626)	270 (3916)	K01CV640S1260	R932011185
12AS	1,60	2,4 (0,63)	250 (3626)	270 (3916)	K01CV640S1261	R932011186
13AS	2,00	3,0 (0,79)	250 (3626)	270 (3916)	K01CV640S1262	R932011187
14AS	2,50	3,7 (0,98)	250 (3626)	270 (3916)	K01CV640S1263	R932011188
15AS	3,15	4,7 (1,24)	250 (3626)	270 (3916)	K01CV640S1264	R932011189
16AS	3,65	5,5 (1,45)	250 (3626)	270 (3916)	K01CV640S1265	R932011190
17AS	4,20	6,3 (1,66)	230 (3336)	250 (3626)	K01CV640S1266	R932011191
18AS	5,00	7,5 (1,98)	210 (3046)	230 (3336)	K01CV640S1252	R932011192
19AS	5,70	8,5 (2,24)	210 (3046)	230 (3336)	K01CV640S1247	R932011193
20AS	7,40	11,1 (2,93)	180 (2611)	200 (2901)	K01CV640S1249	R932011194

Note
All pumps have anti-clockwise rotation.

Flow rate and Pressure

Flow Rate 50 Hz l/min (gpm)	N° poles	RPM	Pump cc/rpm	Motor three phase 230/400V			
				0,55 kW bar *(psi)*	0,75 kW bar *(psi)*	1,1 kW bar (psi)	1,5 kW bar (psi)
1,7 (0,45)	4	1400	1,25	198 (2872)	250(3626)	250(3626)	250(3626)
2,2 (058)	4	1400	1,60	153 (2219)	208(3017)	250(3626)	250(3626)
2,8 (0,74)	4	1400	2,00	120 (1740)	163(2364)	240(3481)	250(3626)
3,5 (0,92)	4	1400	2,50	96 (1392)	131(1900)	192(2785)	250(3626)
4,4 (1,16)	4	1400	3,15	76 (1102)	104(1508)	153(2219)	208(3017)
5,1 (1,35)	4	1400	3,65	66 (957)	90 (1305)	132(1914)	180(2611)
5,8 (1,53)	4	1400	4,20	58 (841)	79 (1146)	116(1682)	158(2291)
7,0 (1,85)	4	1400	5,00	48 (696)	65 (957)	96 (1392)	131(1900)
7,9 (2,01)	4	1400	5,70	42 (609)	58 (841)	85 (1233)	116(1682)
10,3 (2,72)	4	1400	7,40	-	44 (638)	65 (943)	89 (1291)

Flow Rate 50 Hz l/min (gpm)	N° poles	RPM	Pump cc/rpm	Motor three phase 230/400V
				2 kW bar (psi)
3,5 (0,92)	2	2800	1,25	250 (3626)
4,4 (1,16)	2	2800	1,60	250 (3626)
5,6 (1,48)	2	2800	2,00	218 (3162)
7,0 (1,85)	2	2800	2,50	174 (2524)
8,8 (2,32)	2	2800	3,15	139 (2016)
10,2 (2,69)	2	2800	3,65	120 (1740)
11,7 (3,09)	2	2800	4,20	104 (1508)
14,0 (3,70)	2	2800	5,00	87 (1262)
15,9 (4,20)	2	2800	5,70	76 (1102)
20,7 (5,47)	2	2800	7,40	59 (856)

Dimensions [mm (inches)]

Oil Tanks for MT

Technical Data for Plastic Tanks

Temperature range	°C (°F)	-15....+70 (5....158)
Materials		PE=Polyethylene - PP=Polypropilene
Seal		For tanks codes S335-S336-S337-S338-S339-S340-S341-S342 is necessary to use the O-RING Ø112x3 Code: C000191000 R-Number:R932000190. For all the other tanks except the codes above is necessary to use the O-RING 4437 (Ø110,7x3,53) Code:110201203000000 - R-Number:R932000188

Code	Tank capacity l (USgal)	Useable capacity l (USgal)	L mm (inch)	Material	Type	Material Number
S335	1,0 (0,26)	0,7 (0,18)	140 (5,51)	PP	K01K3976SE372	R932002035
S336	1,8 (0,48)	1,2 (0,32)	180 (7,09)		K01K3976SE373	R932002036
S337	2,5 (0,66)	1,7 (0,45)	240 (9,45)		K01K3976SE374	R932002037
S338	3,0 (0,79)	2,3 (0,61)	285 (11,22)		K01K3976SE375	R932002038

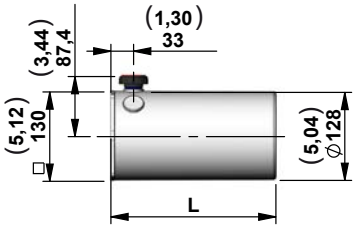

For this tanks is necessary to use the O-RING Ø112x3 code: C000191000 R-Number: R932000190

Code	Tank capacity l (USgal)	Useable capacity l (USgal)	L mm (inch)	Material	Type	Material Number
S339	1,0 (0,26)	0,6 (0,16)	140 (5,51)	PP	K01K3976SE376	R932007882
S340	1,8 (0,48)	1,1 (0,29)	180 (7,09)		K01K3976SE377	R932007883
S341	2,5 (0,66)	1,7 (0,45)	240 (9,45)		K01K3976SE378	R932007884
S342	3,0 (0,79)	2,3 (0,61)	285 (11,22)		K01K3976SE379	R932007885

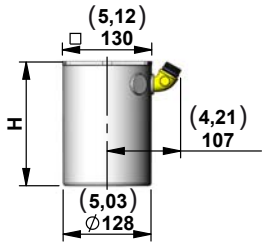

For this tanks is necessary to use the O-RING Ø112x3 code: C000191000 R-Number: R932000190

Code	Tank capacity l (USgal)	Useable capacity l (USgal)	L mm (inch)	Material	Type	Material Number
S246	1,0 (0,26)	0,9 (0,24)		PE	K01K3976SE270	R932002016

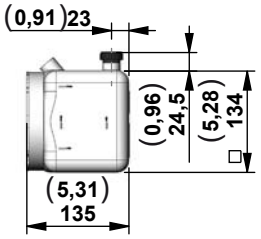

Code	Tank capacity l (USgal)	Useable capacity l (USgal)	L mm (inch)	Material	Type	Material Number
S247	1,8 (0,48)	1,6 (0,42)	170 (6,71)	PE	K01K3976SE271	R932002017
S248	2,5 (0,66)	2,2 (0,58)	240 (9,45)		K01K3976SE272	R932002018

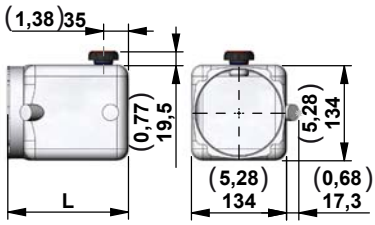

Code	Tank capacity l (USgal)	Useable capacity l (USgal)	L mm (inch)	Material	Type	Material Number
S249	1,0 (0,26)	0,9 (0,24)	135 (5,31)	PE	K01K3976SE273	R932002019
S250	1,8 (0,48)	1,6 (0,42)	170 (6,71)		K01K3976SE274	R932002020
S251	2,5 (0,66)	2,2 (0,58)	240 (9,45)		K01K3976SE275	R932002021

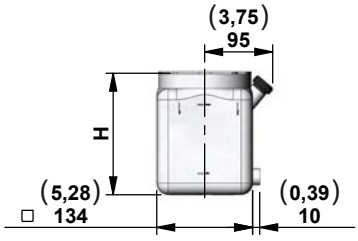

Code	Tank capacity l (USgal)	Useable capacity l (USgal)	L mm (inch)	Material	Type	Material Number
S343	5,0 (1,32)	3,8 (1,00)	230 (9,05)	PE	K01K3976SE380	R932002039
S331	5,0 (1,32)	3,8 (1,00)	230 (9,05)	PE Black	K01K3976SE368	R932007872
S413	7,0 (1,85)	5,5 (1,45)	310 (12,20)	PE	K01K3976SE439	R932007873
S414	7,0 (1,85)	5,5 (1,45)	310 (12,20)	PE Black	K01K3976SE440	R932007874
S415	8,0 (2,11)	6,5 (1,72)	335 (13,19)	PE	K01K3976SE441	R932006036
S416	8,0 (2,11)	6,5 (1,72)	335 (13,19)	PE Black	K01K3976SE442	R932007875
S316	9,0 (2,38)	7,3 (1,93)	365 (14,37)	PE	K01K3976SE351	R932002031
S314	9,0 (2,38)	7,3 (1,93)	365 (14,37)	PE Black	K01K3976SE451	R932007876
S417	12,0 (3,17)	10,0 (2,64)	495 (19,50)	PE	K01K3976SE443	R932006768
S418	12,0 (3,17)	10,0 (2,64)	495 (19,50)	PE Black	K01K3976SE444	R932007877
S344	5,0 (1,32)	3,5 (0,92)	230 (9,05)	PE	K01K3976SE381	R932002040
S332	5,0 (1,32)	3,5 (0,92)	230 (9,05)	PE Black	K01K3976SE369	R932008240
S419	7,0 (1,85)	5,5 (1,45)	310 (12,20)	PE	K01K3976SE445	R932007879
S420	7,0 (1,85)	5,5 (1,45)	310 (12,20)	PE Black	K01K3976SE446	R932007880
S421	8,0 (2,11)	6,5 (1,72)	335 (13,19)	PE	K01K3976SE447	R932006037
S422	8,0 (2,11)	6,5 (1,72)	335 (13,19)	PE Black	K01K3976SE448	R932007881
S315	9,0 (2,38)	7,3 (1,93)	365 (14,37)	PE	K01K3976SE350	R932002030
S313	9,0 (2,38)	7,3 (1,93)	365 (14,37)	PE Black	K01K3976SE348	R932002029
S423	12,0 (3,17)	10,0 (2,64)	495 (19,50)	PE	K01K3976SE349	R932006038
S424	12,0 (3,17)	10,0 (2,64)	495 (19,50)	PE Black	K01K3976SE450	R932006278
S395	3,0 (0,79)	1,7 (0,45)	140 (5,51)	PE	K01K3976SE470	R932007903
S396	3,7 (0,98)	2,2 (0,58)	165 (6,50)		K01K3976SE471	R932007904
S392	5,0 (1,32)	3,1 (0,82)	215 (8,46)		K01K3976SE464	R932007365
S394	8,4 (2,22)	5,5 (1,45)	340 (13,39)		K01K3976SE466	R932007435
S397	12,7 (3,35)	8,4 (2,2)	500 (19,68)		K01K3976SE472	R932007905

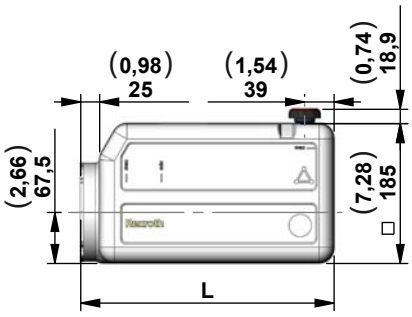

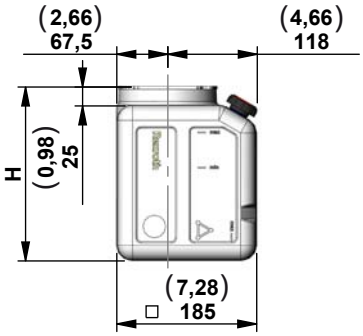

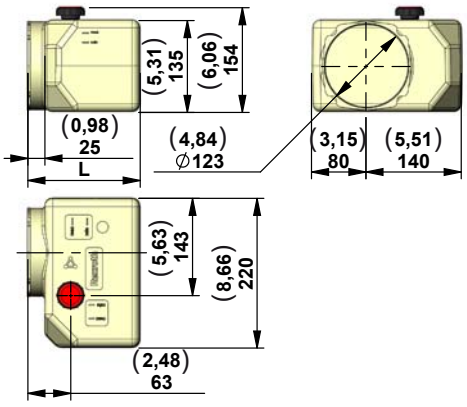

Dimensions [mm (inches)]

Code	Tank capacity l (USgal)	Useable capacity l (USgal)	L mm (inch)	Material	Type	Material Number
S395	3,0 (0,79)	1,7 (0,45)	140 (5,51)	PE	K01K3976SE470	R932007903
S396	3,7 (0,98)	2,2 (0,58)	165 (6,50)		K01K3976SE471	R932007904
S392	5,0 (1,32)	3,1 (0,82)	215 (8,46)		K01K3976SE464	R932007365
S394	8,4 (2,22)	5,5 (1,45)	340 (13,39)		K01K3976SE466	R932007435
S397	12,7 (3,35)	8,4 (2,2)	500 (19,68)		K01K3976SE472	R932007905
S434	3,0 (0,79)	1,7 (0,45)	140 (5,51)	PE	K01K3976SE478	R932007910
S435	3,7 (0,98)	2,2 (0,58)	165 (6,50)		K01K3976SE479	R932007911
S436	5,0 (1,32)	3,1 (0,82)	215 (8,46)		K01K3976SE480	R932007912
S437	8,4 (2,22)	5,5 (1,45)	340 (13,39)		K01K3976SE481	R932007913
S438	12,7 (3,35)	8,4 (2,2)	500 (19,68)		K01K3976SE482	R932007914
S374	5,0 (1,32)	4,0 (1,06)	219 (8,62)	PE	K01K3976SE415	R932002042
S376	7,0 (1,85)	5,4 (1,43)	271 (10,67)		K01K3976SE417	R932002044
S378	8,0 (2,11)	6,6 (1,74)	323 (12,72)		K01K3976SE419	R932002046
S380	11,0 (2,91)	9,6 (2,54)	453 (17,83)		K01K3976SE421	R932002048
S375	5,0 (1,32)	4,0 (1,06)	219 (8,62)	PE	K01K3976SE416	R932002043
S377	7,0 (1,85)	5,4 (1,43)	271 (10,67)		K01K3976SE418	R932002045
S379	8,0 (2,11)	6,6 (1,74)	323 (12,72)		K01K3976SE420	R932002047
S381	11,0 (2,91)	9,6 (2,54)	453 (17,83)		K01K3976SE422	R932002049

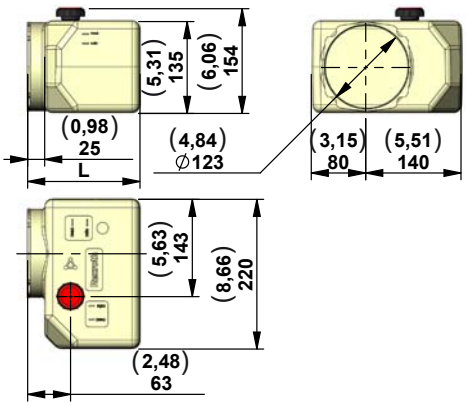

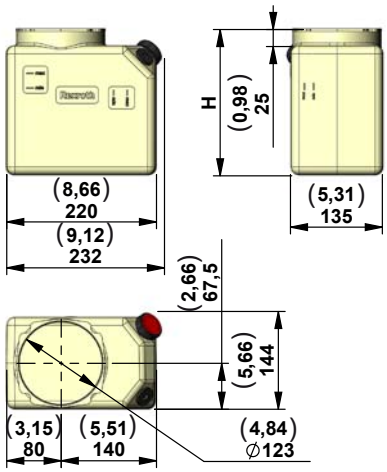

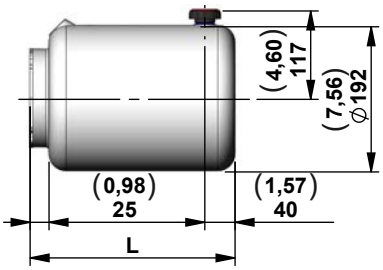

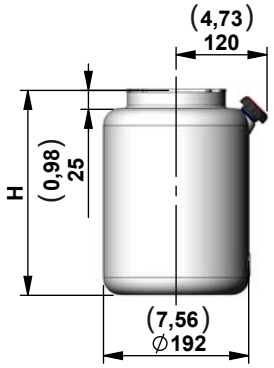

Assembly Kit for Plastic Tank - MT

Oil Tank	Code for MT	Material Number
S335 - S336 - S337 - S338 - S339 - S340 S341 - S342	K2501VT016	R932007391
S246 - S247 - S248 - S249 - S250 - S251	K2501VT025	R932011181
S413 - S414 - S419 - S420 - S415 - S416 - S421 - S422 - S332 - S344 - S313 - S315 - S343 - S331 - S316 - S314 - S374 - S375 - S376 - S377 - S378 - S379 - S380 - S381 - S417 - S418 - S423 - S424 - S395 - S396 - S392 - S394 - S397 - S434 - S435 - S436 - S437 - S438	K2501VT015	R932008244

Please make sure that the tank and motor are mounted correctly

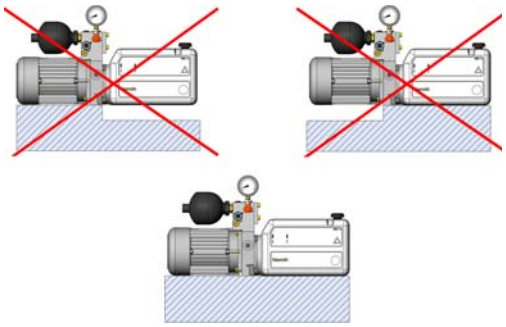

Mounting position

Mounting position			
Code	**Image**		
01	1	1 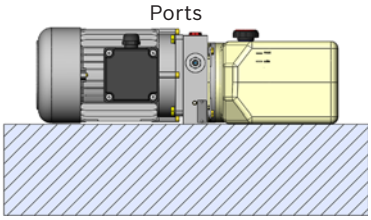	2 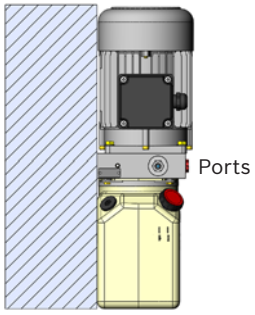
V1	2	3 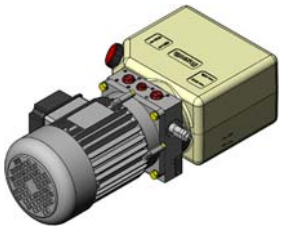	
L	3		
T	4	4 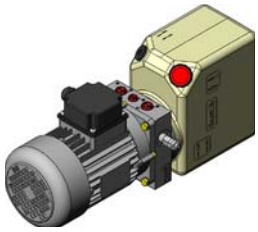	5 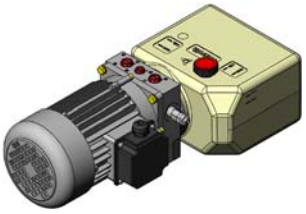
R	5		
Terminal Box Position for A.C. Motors		6-Standard 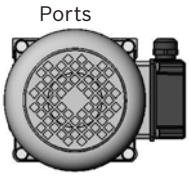	7
Code	**Image**		
–	6		
M2	7	8 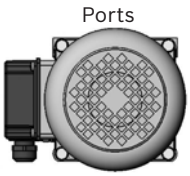	9 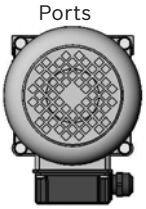
M3	8		
M4	9		
Oil Cap Position for V1 only		10 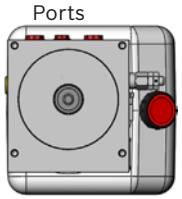	7 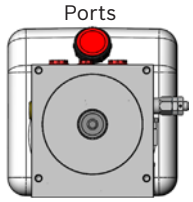
Code	**Image**		
–	10		

LU	11	12 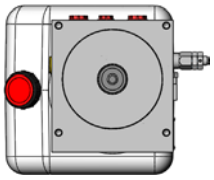	13 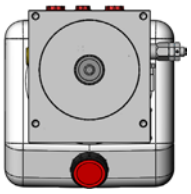
LO	12		
LP	13		

Mounting Brackets

Support for Manifold MT series

Code	Central manifold	Type	Material number		
GMT	MT	K01K331528000	R932011175	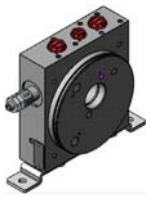	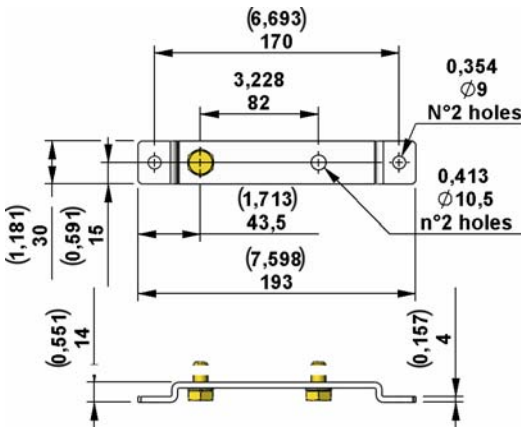

Modular Stackable Elements

Modular Stackable Element MTA01

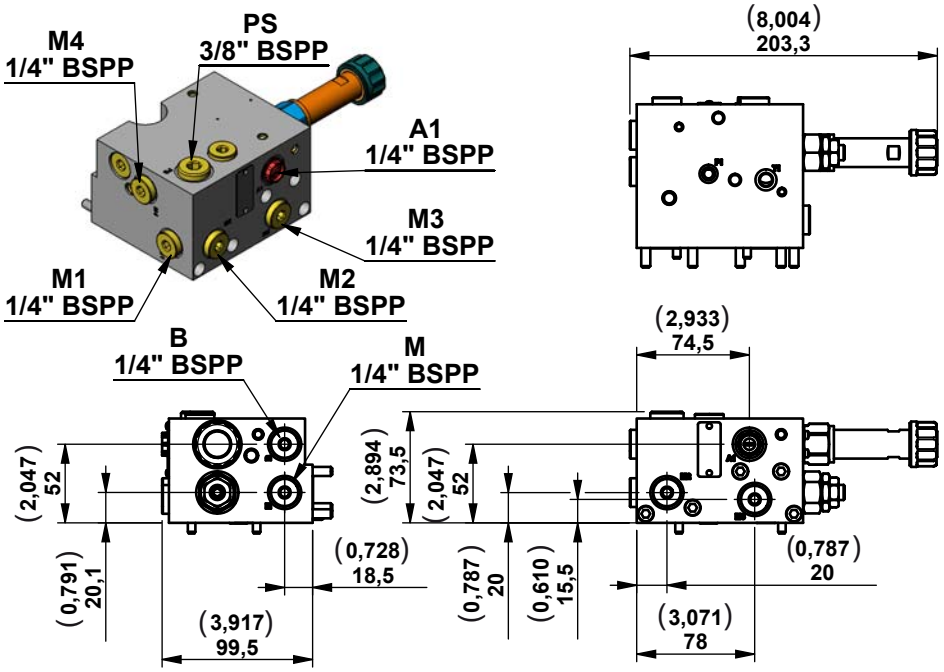

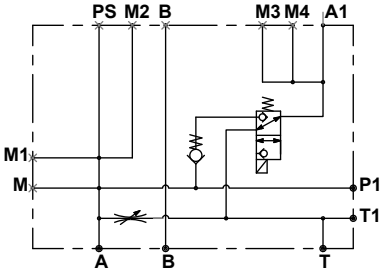

Note

Use coil model K4

For 3/2 KSDE solenoid valve check data sheet RE18136.

Code	Description	Max working pressure bar (psi)	Max flow l/min (gpm)	Type	Material number
MTA01	Kit MTA01 Modular block	250 (3626)	12,0 (3,17)	0985900017	R932008163

Mounting Example

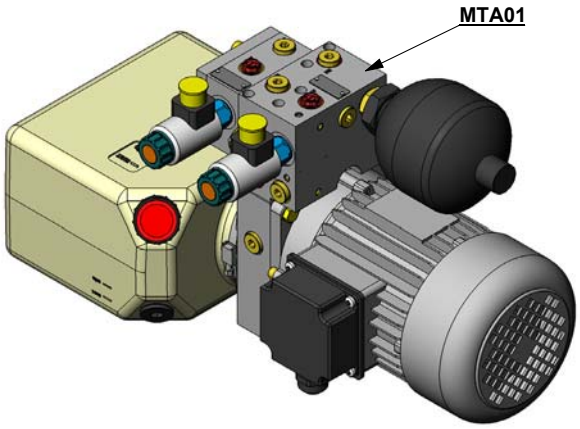

Modular Stackable Element MTA02

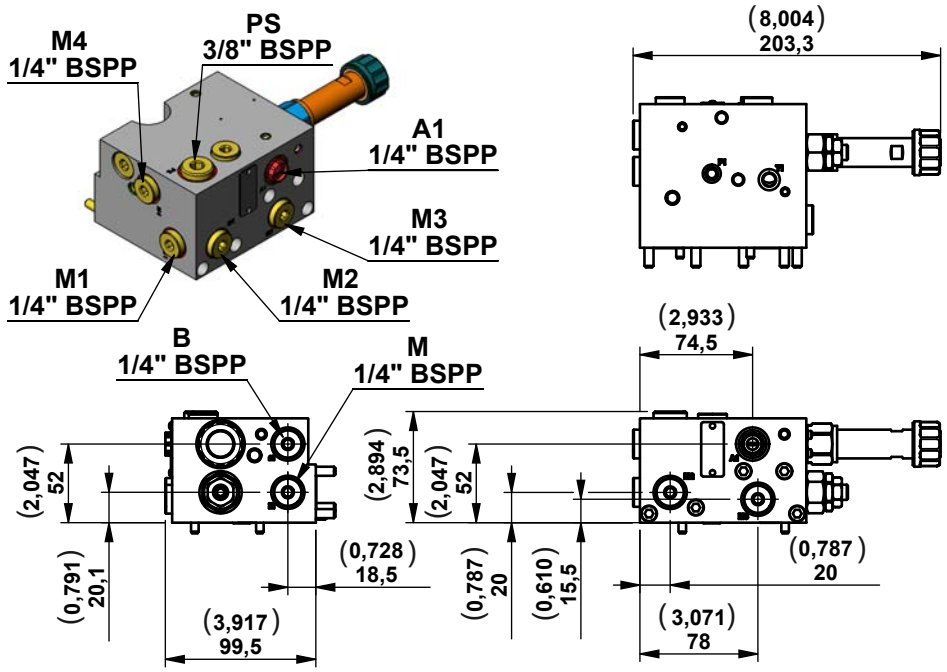

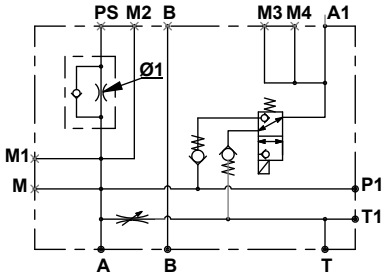

Note

Use coil model K4

For 3/2 KSDE solenoid valve check data sheet RE18136.

Code	Description	Max working pressure bar (psi)	Max flow l/min (gpm)	Type	Material number
MTA02	Kit MTA02 Modular block	250 (3626)	12,0 (3,17)	0985900021	R932010931

Mounting Example

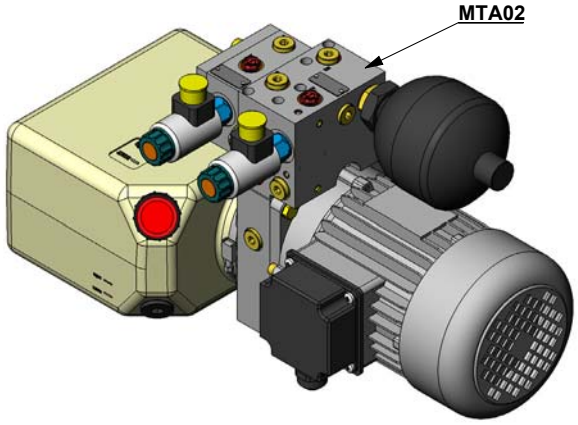

Modular Stackable Element MTA03

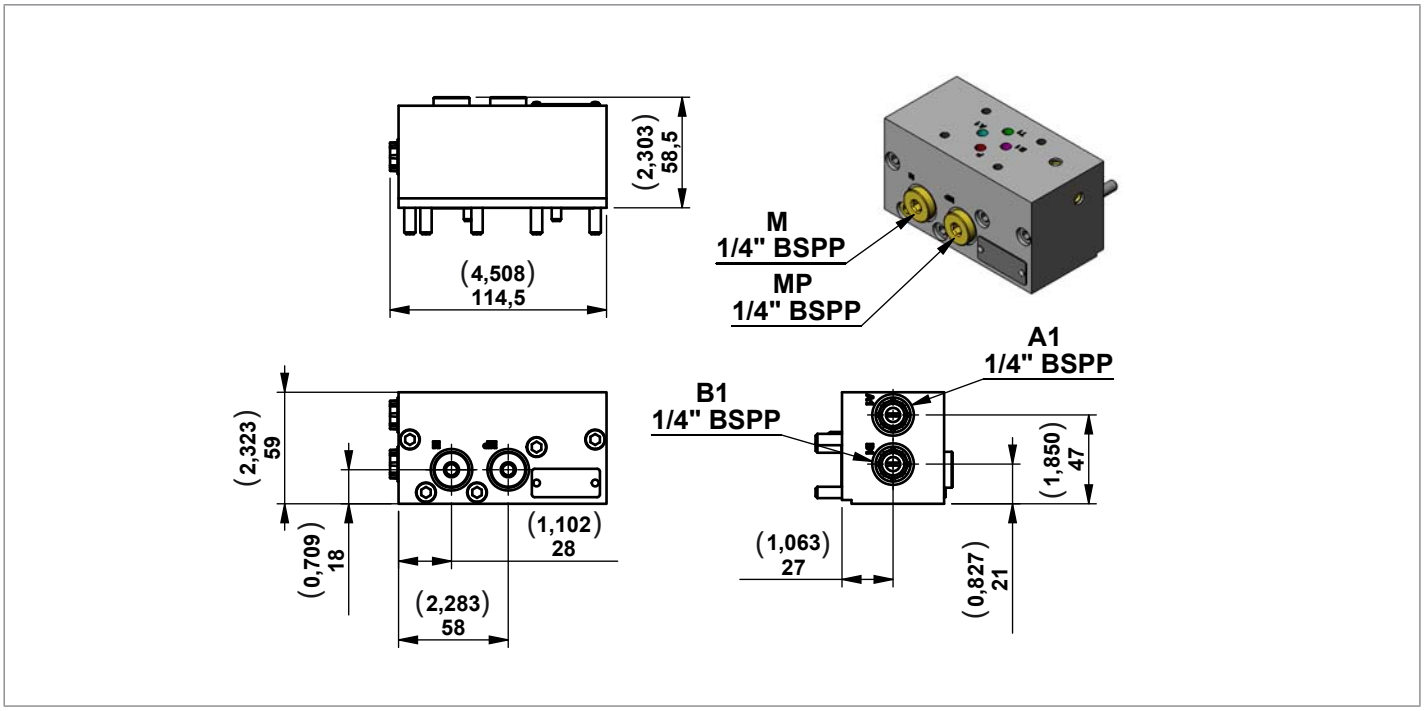

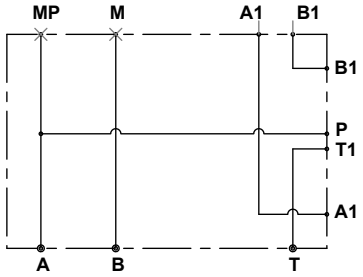

Code	Description	Max working pressure bar (psi)	Max flow l/min (gpm)	Type	Material number
MTA03	Kit MTA03 Modular block	250 (3626)	20,0 (5,28)	0985900011	R932007989

Mounting Example

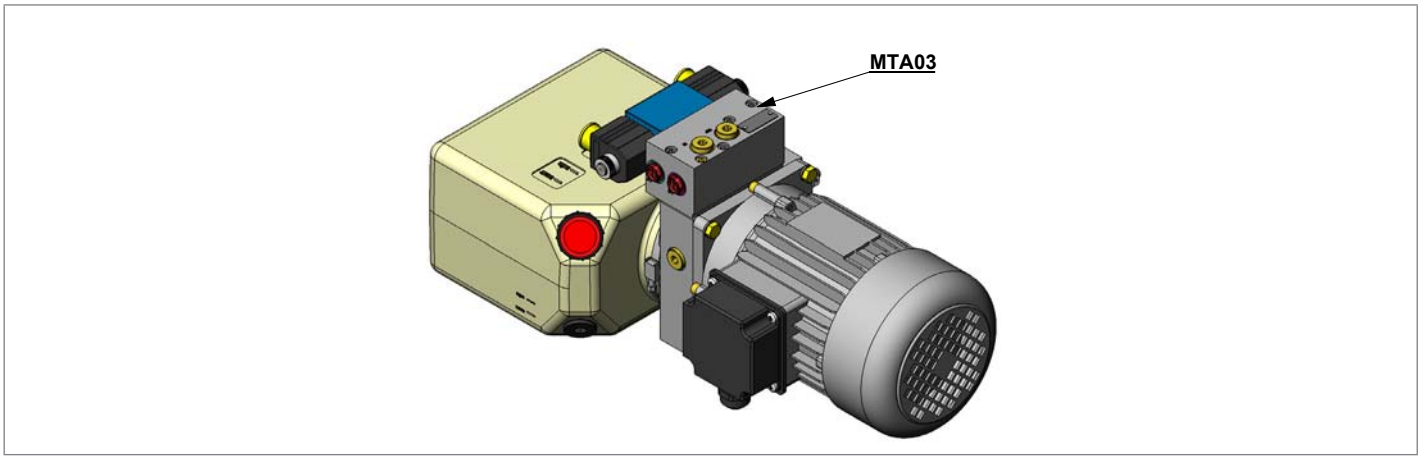

Modular Stackable Element MTA04

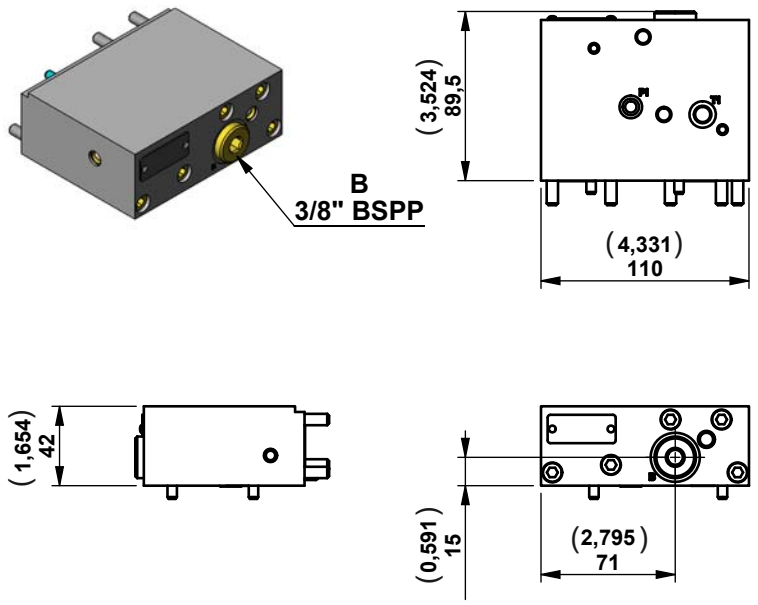

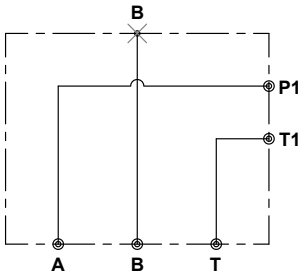

Code	Description	Max working pressure bar (psi)	Max flow l/min (gpm)	Type	Material number
MTA04	Kit MTA04 Modular block	250 (3626)	20,0 (5,28)	0985900018	R932008172

Mounting Example

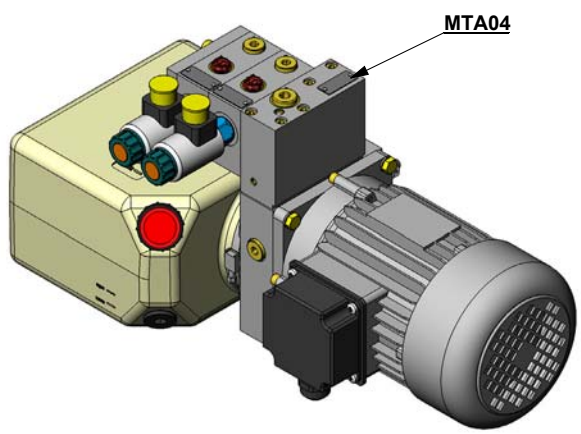

Modular Stackable Element MTD01

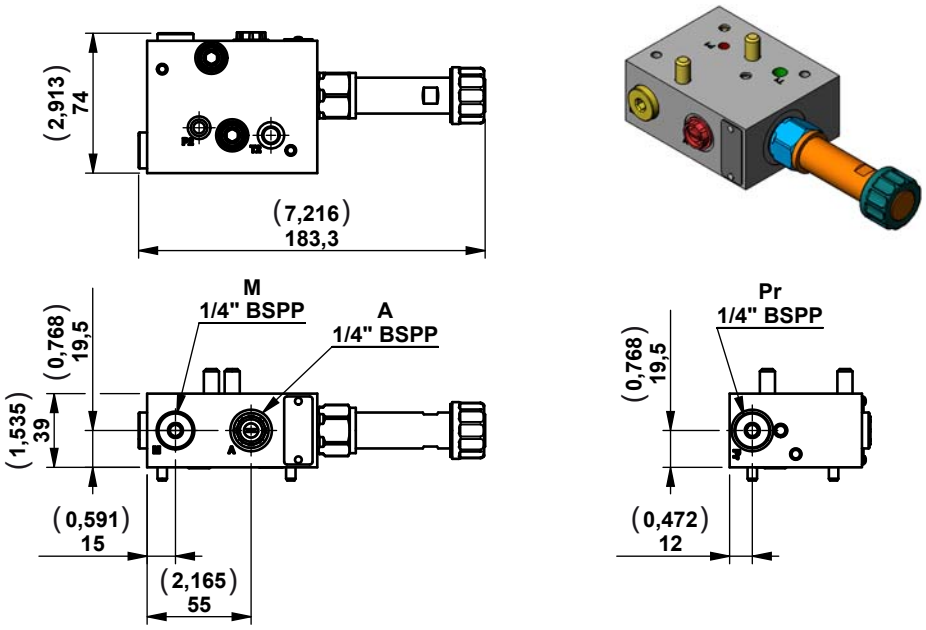

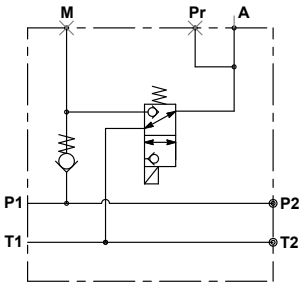

Note

Use coil model K4

For 3/2 KSDE solenoid valve check data sheet RE18136.

Code	Description	Max working pressure bar (psi)	Max flow l/min (gpm)	Type	Material number
MTD01	Kit MTD01 Modular block	250 (3626)	12,0 (3,17)	0985900001	R932007956

Mounting Example

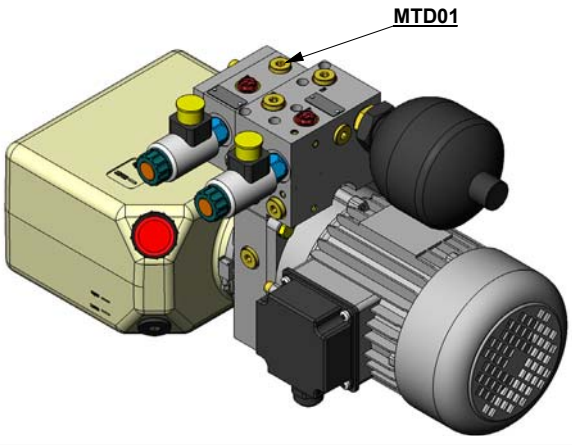

Modular Stackable Element MTD02

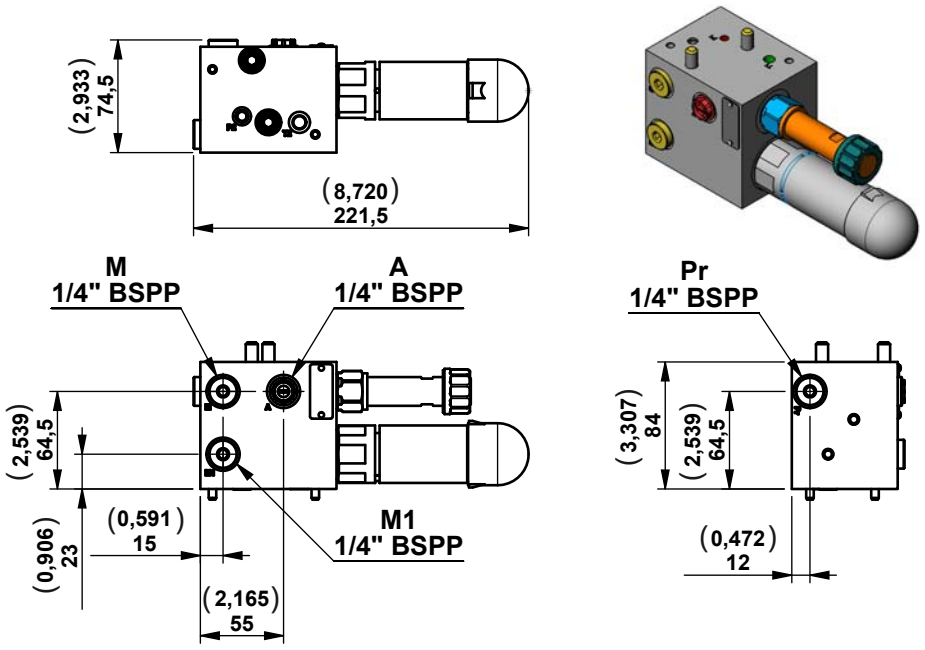

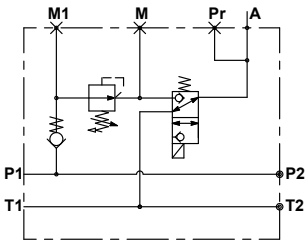

Note

Use coil model K4

For 3/2 KSDE solenoid valve check data sheet RE18136.

For KRD pressure reducing valve check data sheet RE18111.

Code	Description	Max Working Pressure bar (psi)	Max Flow l/min (gpm)	Pressure Stage	Type	Material Number
MTD02/1	Kit MTD02/1 Modular block with pressure reducing valve	250 (3626)	12,0 (3,17)	Pressure setting up to 100 bar (1450)	0985900002	R932007965
MTD02/2	Kit MTD02/2 Modular block with pressure reducing valve	250 (3626)	12,0 (3,17)	Pressure setting up to 210 bar (3046)	0985900003	R932007966

Mounting Example

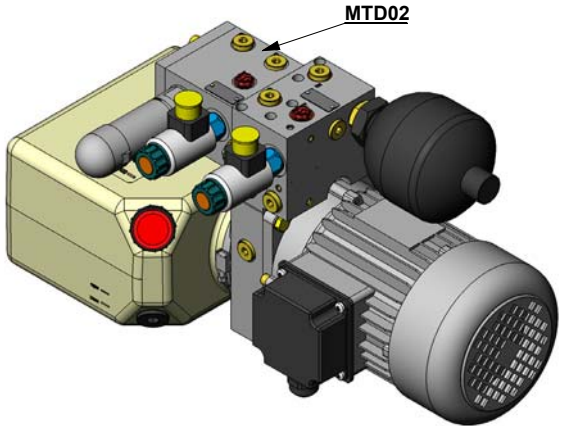

Modular Stackable Element MTD03

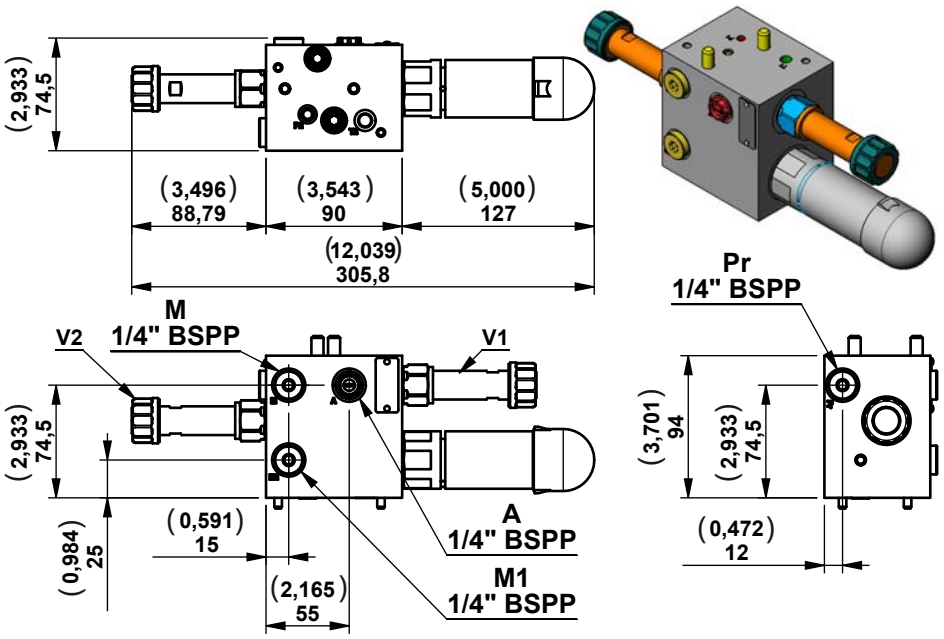

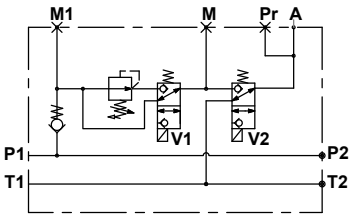

Note

Use coil model K4

For 3/2 KSDE solenoid valve check data sheet RE18136.

For KRD pressure reducing valve check data sheet RE18111.

Code	Description	Max Working Pressure bar (psi)	Max Flow l/min (gpm)	Pressure Stage	Type	Material Number
MTD03/1	Kit MTD03/1 Modular block with pressure reducing valve	250 (3626)	12,0 (3,17)	Pressure setting up to 100 bar (1450)	0985900005	R932007974
MTD03/2	Kit MTD03/2 Modular block with pressure reducing valve	250 (3626)	12,0 (3,17)	Pressure setting up to 210 bar (3046)	0985900006	R932007975

Mounting Example

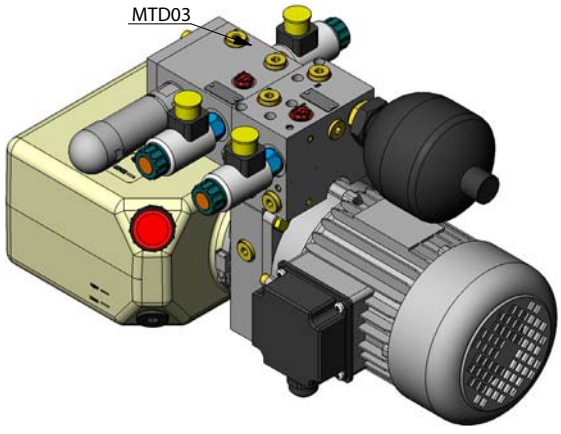

Modular Stackable Element MTD04

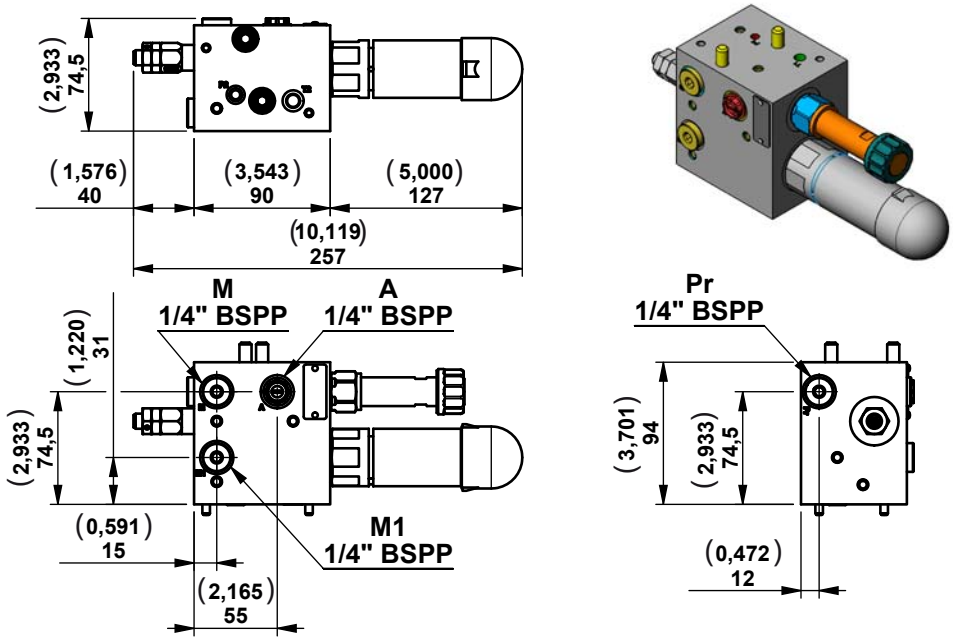

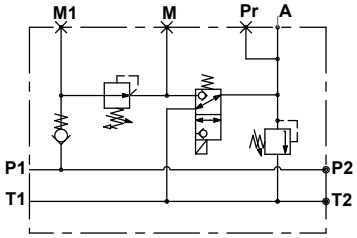

Note

Use coil model K4

For 3/2 KSDE solenoid valve check data sheet RE18136.

For KRD pressure reducing valve check data sheet RE18111.

Code	Description	Max Working Pressure bar (psi)	Max Flow l/min (gpm)	Pressure Stage	Type	Material Number
MTD04/1	Kit MTD04/1 Modular block with pressure reducing valve	250 (3626)	12,0 (3,17)	Pressure setting up to 100 bar (1450)	0985900008	R932007983
MTD04/2	Kit MTD04/2 Modular block with pressure reducing valve	250 (3626)	12,0 (3,17)	Pressure setting up to 210 bar (3046)	0985900009	R932007984

Mounting Example

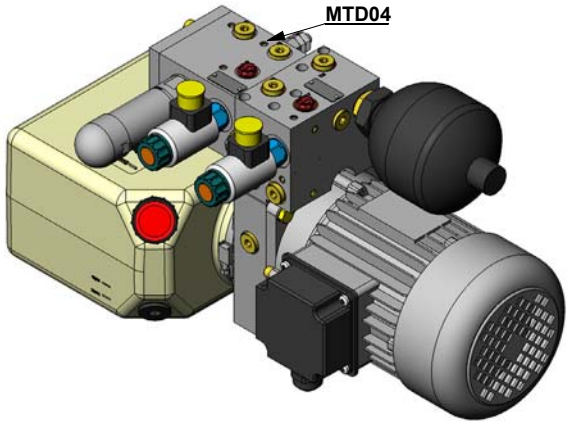

Modular Stackable Element MTD08

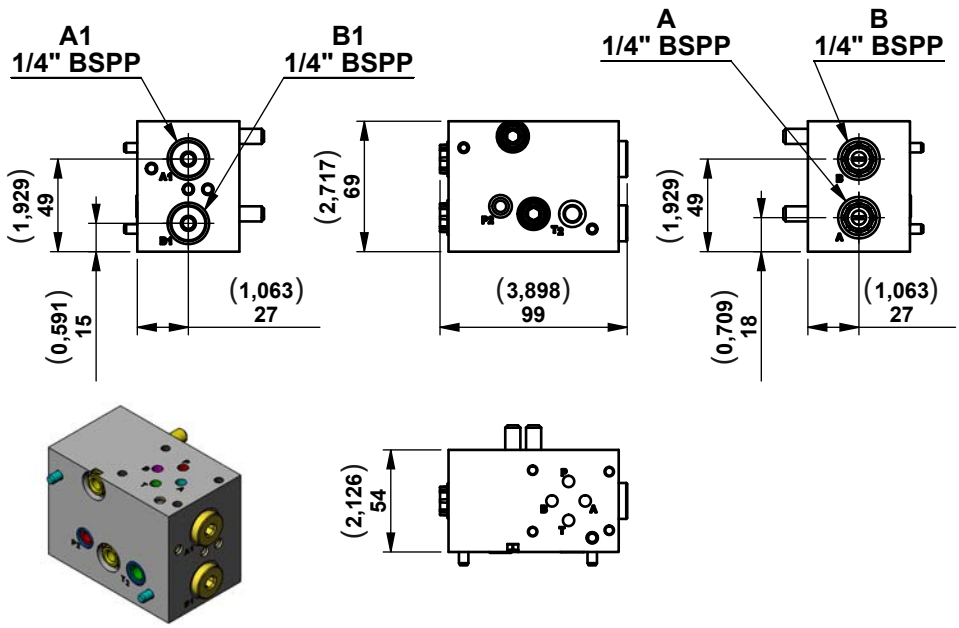

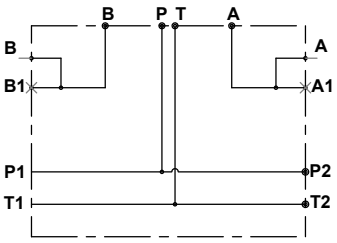

Code	Description	Max working pressure bar (psi)	Max flow l/min (gpm)	Type	Material number
MTD08	Kit MTD08 Modular block	250 (3626)	20,0 (5,28)	0985900012	R932007997

Mounting Example

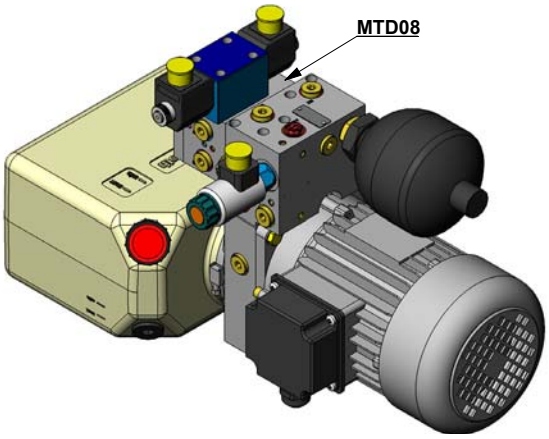

Modular Stackable Element RT60

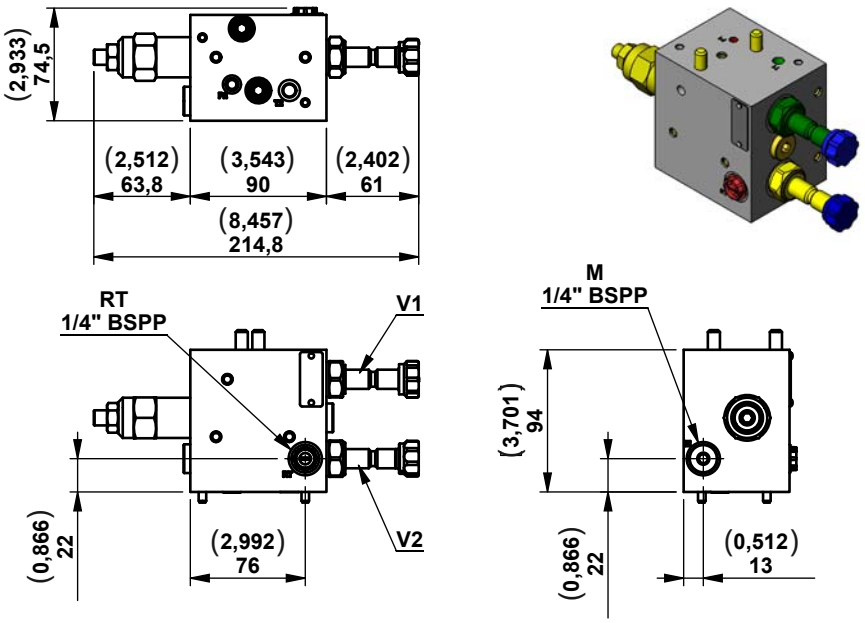

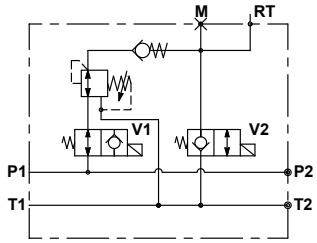

Note

Use Coil Model S8

Code	Description	Max Working Pressure bar (psi)	Max Flow l/min (gpm)	Pressure Stage	Type	Material Number
RT60/05	Kit RT60/05 Modular block with pressure reducing valve	250 (3626)	20,0 (5,28)	Pressure setting up to 10-50 bar (145-725)	0985900020	R932008367
RT60/08	Kit RT60/08 Modular block with pressure reducing valve	250 (3626)	20,0 (5,28)	Pressure setting up to 28-80 bar (406-1160)	0985900019	R932008361

Mounting Example

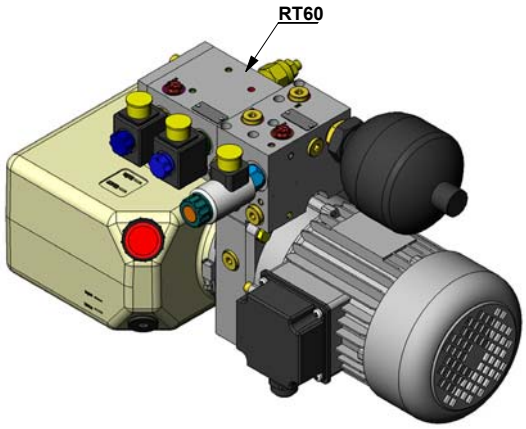

Dimensions [mm (inches)]

Modular Stackable Element MTF01

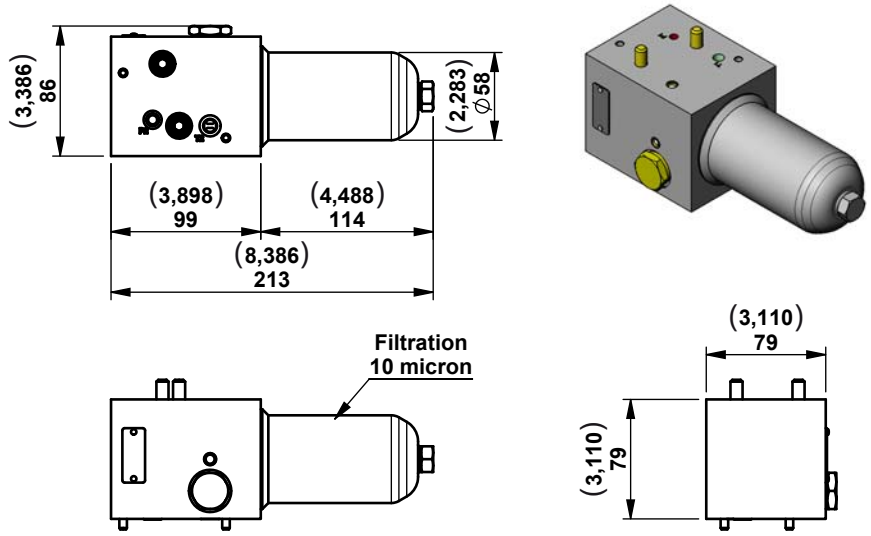

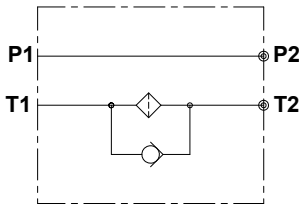

Code	Description	Max working pressure bar (psi)	Max flow l/min (gpm)	Type	Material number
MTF01	Kit MTF01 Modular block	250 (3626)	15,0 (3,96)	0985900022	R932011139

Mounting Example

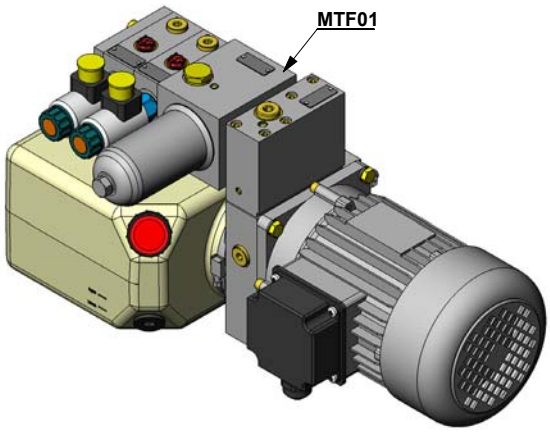

Modular Stackable Element MT

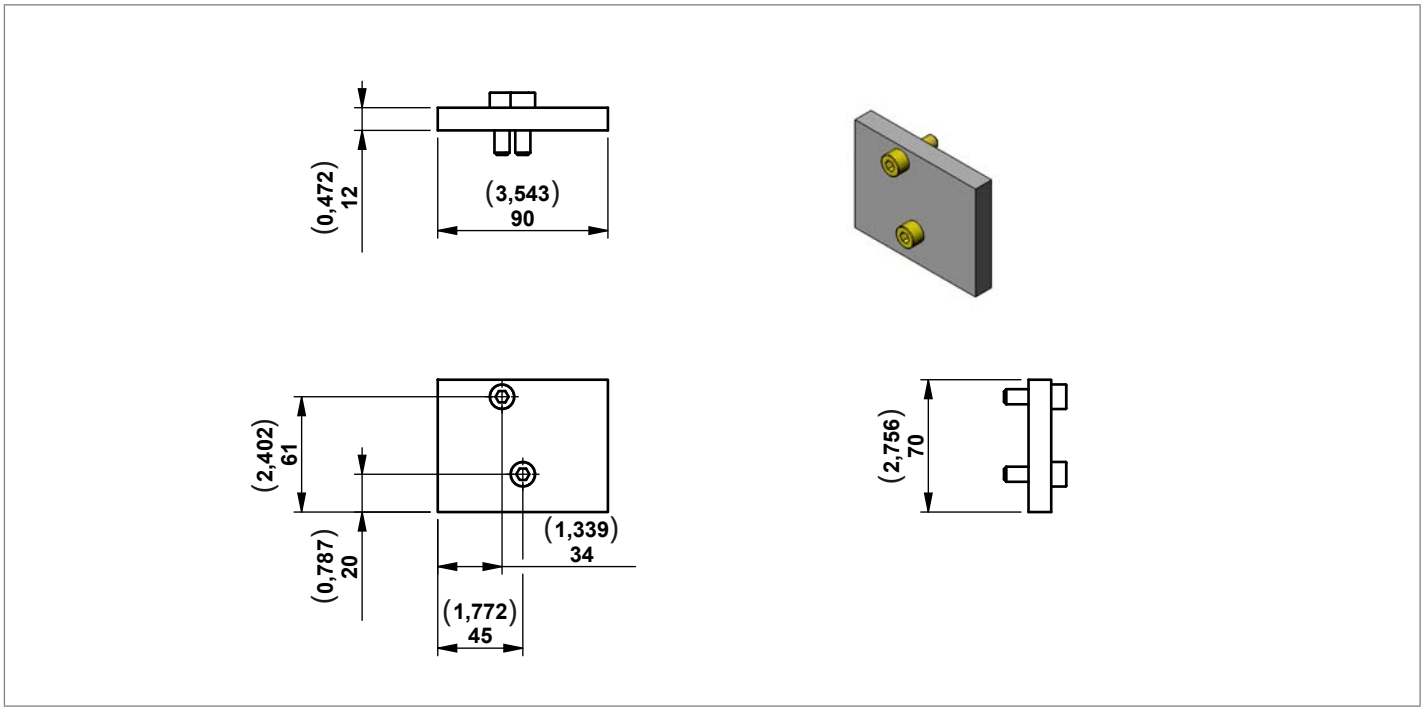

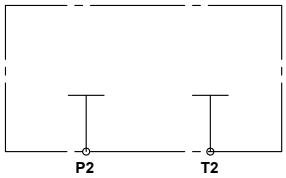

Code	Description	Type	Material number
MT	Kit MT Closing plate	0985900016	R932008159

Mounting Example

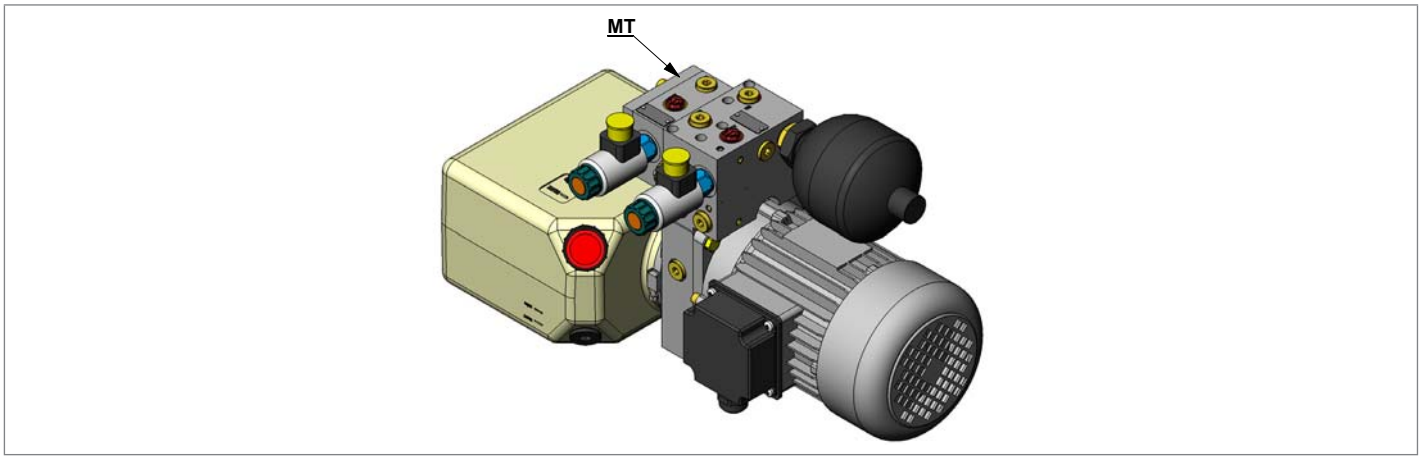

Coils

K4

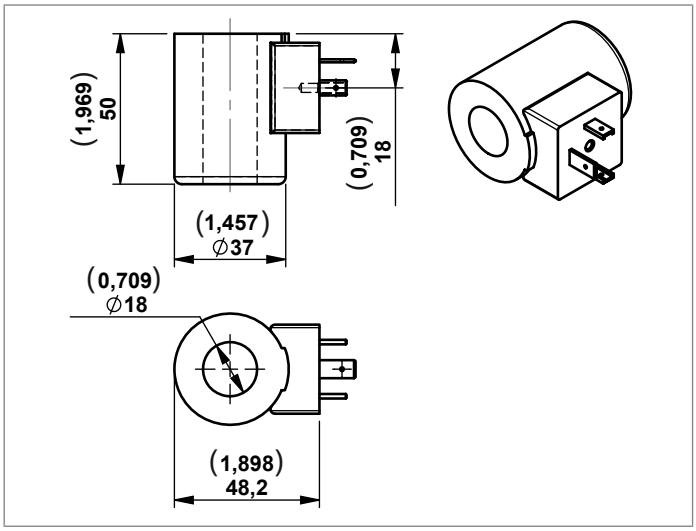

Code	Connection	Voltage	Material Number
OB	03-pin (2+PE) DIN EN 175301-803	12 V	R900991678
OC	03-pin (2+PE) DIN EN 175301-803	24 V	R900991121

S8

Only for modular block RT60

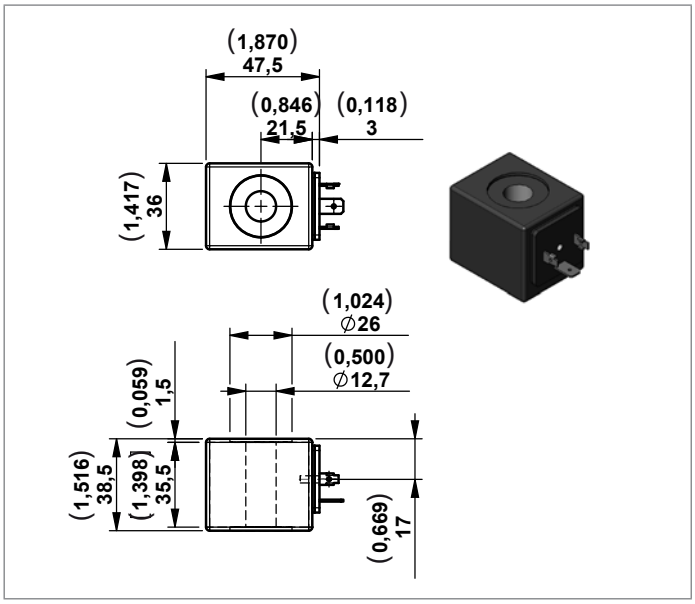

Code	Connection	Voltage	Material Number
OB	DIN 43650 - ISO 4400	12 V	R901090821
OC	DIN 43650 - ISO 4400	24 V	R901083065

Connectors

CONNECTOR IP67 - EN175000 (DIN 4350-A) / ISO 4400

Ambient temperature - Standard	°C (°F)	- 20 to + 60 (-4 to +140°F)
Type of protection according to DIN 40050		IP67 with cable socket mounted and locked
Operating voltage	V	Choose the proper ordering code according to the circuit
Maximum operating current - Standard	A	16
Number of pins		2 + PE
Clamping range for cables having an outer diameter of	mm (inch)	5, up to 10 (0,2 up to 0,4)
Cable entry		Pg9 / Pg11 (unified)
Maximum cable cross-section	mm^2 ($inch^2$)	1.5 (0,002)

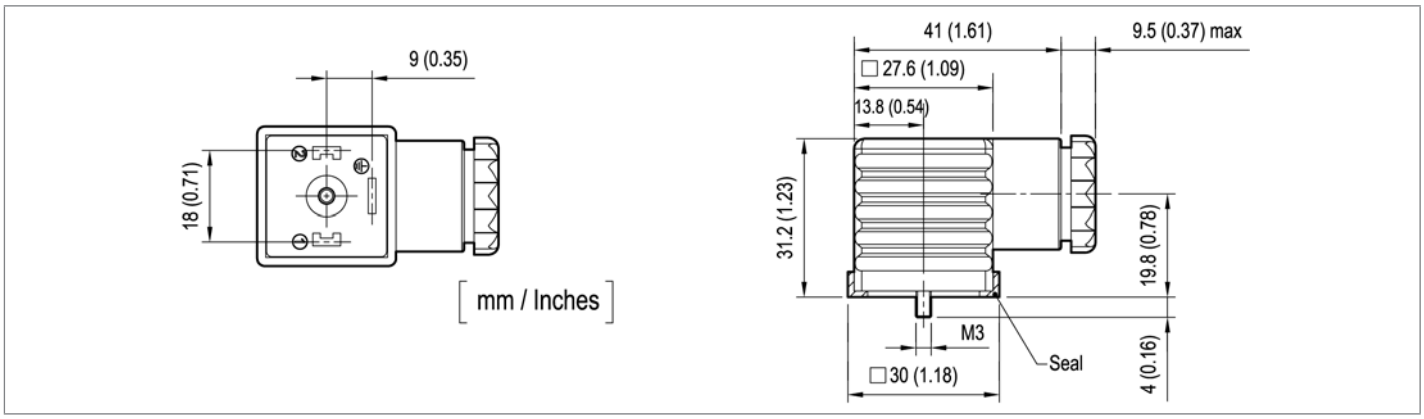

Standard Circuit

Code	Colour	Cable entry	Type	Material Number
WC	Without Connector			
CS	black	Pg9 / Pg11	OD016901000000	R934004344

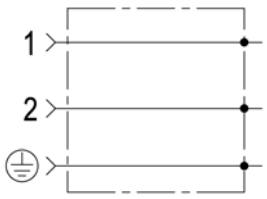

Dimensions [mm (inches)]

Accessories

Isolator

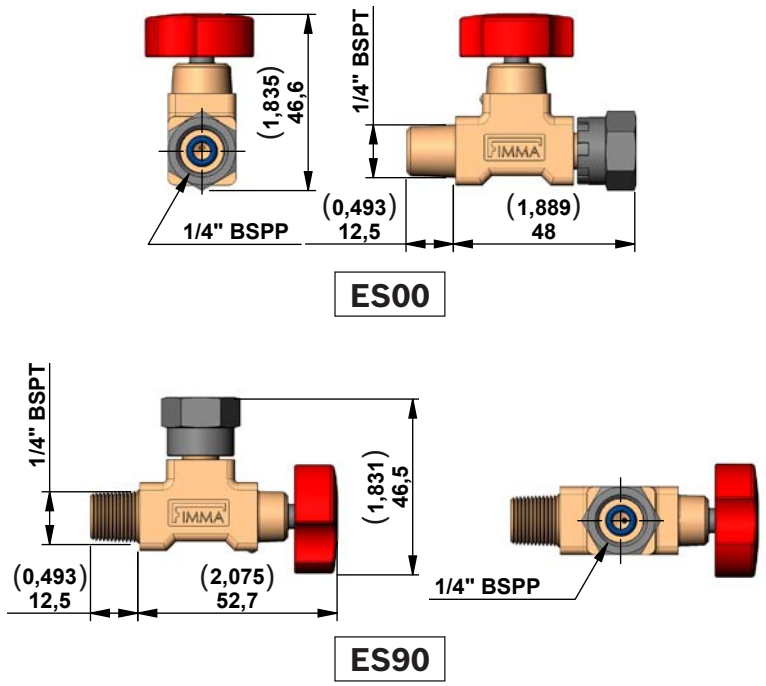

Code	Description	Type	Material Number
ES00	Straight isolator	EM 14	R932500182
ES90	90° isolator	EM 14 T	R932500184

Manometer

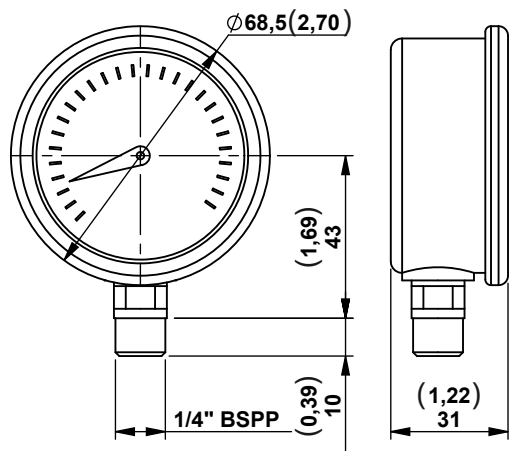

Code	Description	Pressure range bar (psi)	Type	Material Number
MN100	Pressure gauge	0-100 (0-1450)	C163017000	R932000582
MN160	Pressure gauge	0-160 (0-2320)	C163018000	R932000583
MN250	Pressure gauge	0-250 (0-3626)	C163019000	R932000584
MN315	Pressure gauge	0-315 (0-4568)	C163020000	R932000585

Dimensions [mm (inches)]

Pressure Switches

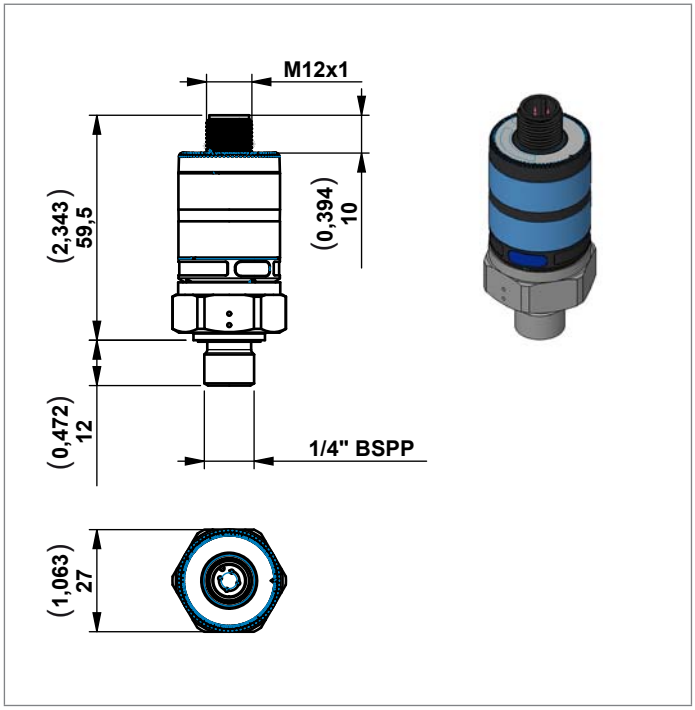

Note
If you need a electronic pressure switch please refer to the data sheet RE 30279

Accumulator

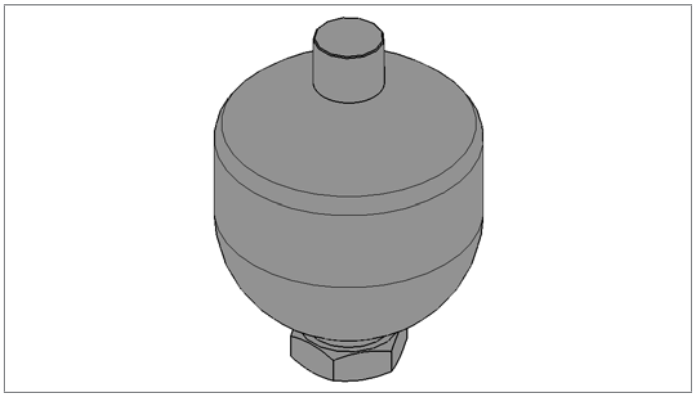

Note
If you need an diaphragm-type accumulator please refer to the data sheet RE 50150

Rexroth
Bosch Group

Technical data for:

Mechanical and Solenoid cartridge valves, Hydraulic integrated circuits, Load holding / Motion control valves, Compact power modules.

Introduction:
Do not apply the below technical data to the following sections:

- *High pressure cartridge valves and Proportional pressure reducing valves & Remote control manifolds (RE 90010-05 chapter 5 and 6). Please refer to the information included on the individual data sheet and/or contact the sales network indicated on it for any doubts.*
- *Compact Directional Valves (RE 90010-06 chapters 2, 3, 4 and 5). Please refer to the information included on the dedicated data sheet RE 18350-49 and/or contact the sales network indicated on the individual data sheet for any doubts.*

For Compact Power Modules (RE 90010-06 chapter 6), please refer to the information included on this data sheet (see page 11) and on the individual data sheet for technical and usage details. In case of doubt, contact the sales network indicated.

1. General

Bosch Rexroth Product Area 2 - Compact Hydraulics (CH) proposes a wide range of hydraulic components for applications in hydraulic circuits of mobile machinery. Detailed information about product performance, selection, installation and technical data can be obtained from our Customer Service Organization; here you may find a summary of general specifications which apply to all our CH hydraulic products with the aim to provide general guidance only. All our CH hydraulic products may be installed in hydraulic circuits of industrial machinery: however it is strongly recommended to contact in advance our Customer Service Organization.

2. Hydraulic fluids

Mineral oil based hydraulic fluids suitable for hydraulic systems can be used; they should have physical lubricating and chemical properties as specified by:

- MINERAL OIL BASED HYDRAULIC FLUIDS HL (DIN 51524 part 1)
- MINERAL OIL BASED HYDRAULIC FLUIDS HLP (DIN 51524 part 2).

For use of environmentally friendly fluids (vegetable or polyglycol base), or other fluids, please consult CH.

2.1 Fluid viscosity

When not differently specified in the individual data sheet, the fluid viscosity should remain within the range 3 to 400 cSt (centistokes). Hydraulic fluids are available in different viscosity classes identified by the ISO VG number, which corresponds to the kinematic viscosity at 40°C (104°F). Here is a table showing typical viscosity changes between 0°C and 100°C (32°F and 212°F) for mineral oil based fluids having various viscosity classes. The fluid should be selected with the aim to achieve an appropriate operating viscosity at the expected working temperatures.

VISCOSITY CLASS	KINEMATIC VISCOSITY - (cSt)		
	MAX at 0°C (32°F)	MED at 40°C (104°F)	MIN at 100°C (212°F)
ISO VG 10	90	10	2.4
ISO VG 22	300	22	4.1
ISO VG 32	420	32	5
ISO VG 46	780	46	6.1
ISO VG 68	1400	68	7.8
ISO VG 100	2560	100	9.9

Note: all main performance curves and specifications shown in CH technical literature are obtained using mineral based fluid ISO VG 46, i.e. 46 cSt at 40°C (104°F), with an oil temperature of 30-40°C (86-104°F).
More detailed technical characteristics are available at CH.

2.2 Fluid temperature recommendation

CH components are generally equipped with BUNA-N seals and, for this reason, the fluid temperature should remain within the -30°C and +100°C range (-22°F and +212°F). In case of temperatures outside this range, consult CH.
Warning: be careful! During operation the valve can heat up to oil temperature!

2.3 Fluid cleanliness requirements

The cause of malfunctions in hydraulic systems and components is often found to be excessive fluid contamination. The hard contaminant particles in the fluid wear the hydraulic components and prevent the poppets from re-seating, with consequent internal leakage and system inefficiency. For the correct operation of CH components it is necessary to adopt filtration methods which guarantee for life the specified fluid cleanliness level. It is important to ensure that hydraulic fluids are brought to the appropriate cleanliness level prior filling up the systems, and, when in doubt, also to flush the hydraulic components prior to installation. Fluid filtration must comply with recommended fluid contamination indicated on each single valve datasheet.
ISO 4406:1999 presently is the preferred standard; it defines the fluid cleanliness by three numbers respectively representing the maximum number of particles larger than **4µm**, **6µm** and **14µm** contained in one ml of fluid.

3. Internal leakage

Here is a table with general information about the sealing properties of CH valves and components with leak proof seat design; the allowed leakage tolerance may change depending on the design, number of poppets and valve size; this general information is given for guidance only and, for many valves, specific details about the permissible leakage tolerance can be found in the relevant data sheet.

The LEAKAGE for different valve families is expressed in cm^3/min, or drops/min and is measured in the specified test conditions.
The ratio between cm^3 and drops is approximately:
1 cm^3 (or 0.06 in^3) = 15 – 18 drops.
For pressure relief valves the leakage is indicated at re-seating conditions, identified as X% of pressure relief setting.

CHART OF SEALING PROPERTIES	
HYDRAULIC FUNCTION	Max leakage
Pressure relief 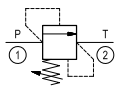	15 drops at 80% of std pressure setting
Check valve	5 drops/min
Pilot assisted counterbalance 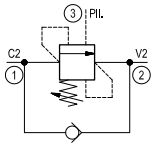	15 drops/min at 70% of pressure setting in re-seating conditions (cracking pressure)

4. Pressure setting

CH valves are supplied pre-set at the standard pressure setting shown by the relevant catalogue sheet. Whenever the application requires a re-adjustment, please ensure that the limits of the indicated pressure range and maximum working pressure are never exceeded.

5. Sealing of valve adjusters

Special plastic sealing caps for service are available for most CH valves and cartridges. Upon request, valves can be supplied factory sealed.

6. Storage of new components

The components shall not be exposed to direct sun light nor to sources of heat or ozone (like electric motors running), and should be stored in their original, protective packing at ambient temperature within the range -20°C and +50°C (-4°F and 122°F).

7. Ports

G type ports (ISO 228-1) are often standard on components with body for line connection; SAE sizes (straight thread), JIS or metric ports can be manufactured upon request.

8. Body materials

- Valves and integrated manifolds for high pressure and/or heavy duty applications are manufactured with high quality leaded steel, zinc plated with yellow trivalent chrome treatment.
- Valves and integrated manifolds for medium working pressure (up to 210 bar) can be made of high strength wrought aluminium, black anodized upon request.
- Housings for modular, solenoid operated directional valves and flow diverters are made of high strength cast iron, zinc plated with yellow trivalent chrome treatment.

9. Seals

O-Rings: Buna N (acrylonitrile butadiene), also named NBR (according to ASTM), compatible with fluids having mineral oil base, water-in-oil emulsions, and water-glycol fluids. These seals are standard for temperatures within the range -30°C and +100°C (-22°F and +212°F).
Back-up rings and Slide rings: strengthened PTFE (Politetrafluoroetilene like Teflon®, Lubriflon®, Ecoflon®, or similar).
Special FPM (Viton®) seals are available on request.
Note: the seal materials are compatible with the fluids normally used in hydraulic systems; in case of special fluids, if you suspect incompatibility between the fluid used and the standard seals, contact the CH service network.

9.1 Seal kits

- for cartridge valves: the kits include all the external seals;
- for components assembled as parts in bodies or housings: the kits include all external seals for flange fitting, or for matching different units together.
- in general seal kits contain seals for 10 valves.

10. Installation

- Only trained and competent personnel may carry out any work on Bosch Rexroth Oil Control valves.
- During any operation on Bosch Rexroth Oil Control valves, it is recommended to pay attention to valves surfaces temperature.
- Ensure that all matching surfaces are clean, without contamination.
- Ensure that all seals and back-up rings for the matching surfaces are flawless and correctly placed.
- Do not put any sealing material other than the standard seals.
- During the assembly of the valve and/or the group of valves, refer to the hydraulic scheme and to the name assigned to each port.
- Do not hang the valves and/or the group of valves to the hydraulics pipes, but always use the specific fixing holes.
- In case of use of screw and push and twist overrides, the command must be removed before starting the machine.
- Place in position the valve, then, by hand, insert the fittings and the locating screws.
- In case of cartridge valve, check that the cavity is clean, without sharp edges or chips. Dip the cartridge in clean oil, then insert it into the cavity and screw it in by hand, until you begin to compress the top O-Ring.
- Finally tighten with a calibrated torque wrench and torque up to the specifications shown in the catalogue.
- Use gloves in order to avoid accidental injuries during installation or maintenance.
- Do not grab / handle product from moving parts (i.e. cables, levers, upper side of cartridges,...etc.
- All valves or groups of valves are attributable to pressure vessels. It‘s always recommended to place the components in a closed but ventilated compartment, able to protect the environment and users in case of accidental ejection of material under pressure (fittings, pipes, plugs expander ... etc.)
- Do not tamper with the valve. Only the substitution of the valve itself, the coil or permitted seals (part ok Bosch Rexroth seal kit) are generally allowed.
- Before removing or disassembling the valve or allowed parts (as pressure gauge ports, purge plugs, ...etc) it is strongly recommended to vent all hydraulic pressure from the system.
- Remove tension from the coils before any kind of maintenance / installation operation.
- Check the connections and the cable section with reference to the coils nominal current.
- During the first start of the machine, please ensure that the grounding system is connected and stay away from moving parts.
- In case of allowed adjustments on the valve, any maximum protrusion or other admissible maximum value indicated in valve datasheet must not be exceeded.

11. Cavities for screw-in cartridges

CH has developed a complete range of cartridges which fit the cavity patterns with UN/UNF threads, according to SAE standards, nominal sizes 08-10-12-16-20. Internal parts of cartridges are designed with a global view of our comprehensive variety of hydraulic products; accordingly, our technology has been optimized in order to employ few basic parts for many different valves for best reliability, cost effectiveness and availability. Further, we can propose our cartridges in different versions, with a variety of external shells in order to fit other cavity patterns, such as ISO/METRIC, or special industrial patterns.

12. **Coils**

12.1 **Coil installation on solenoid cartridges**

COIL INSTALLATION

COIL WITH O-RING SEATS (S7-S5-R7)

- It is recommended to follow these steps:
- Insert 1st O-Ring (see drawing)
- Insert coil
- Insert 2nd O-Ring (see drawing)
- Tighten BY HAND coil retaning nut (in any case do not exceed the torque specified in the catalogue page).

COIL WITHOUT O-RING SEATS (S8-356)

- It is recommended to follow these steps:
- Insert 1st O-Ring (see drawing)
- Insert coil
- Tighten BY HAND coil retaining nut to the torque specified in the cartridge catalogue page. The 2nd O-Ring is fixed inside the nut.

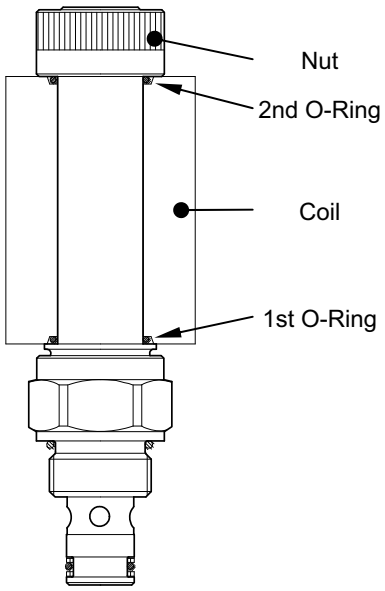

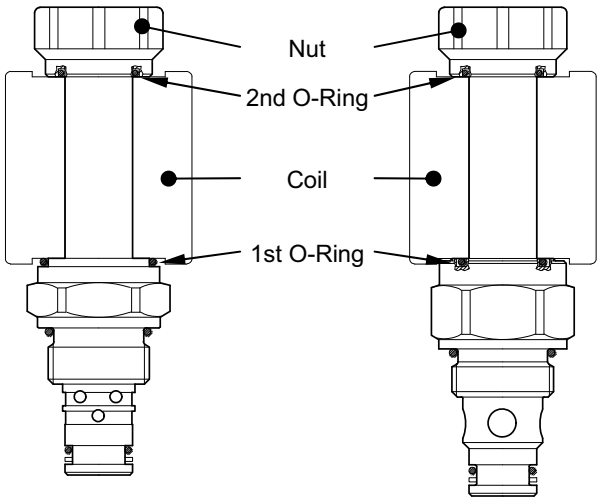

IMPORTANT: O-Rings are the only protection against water infiltration between tube and coil, which may lead in short time to coil failure. The proper mounting of both O-Rings is therefore necessary to ensure normal life of coils. Bosch Rexroth Oil Control cannot guarantee any IP protection degree if both O-Rings are not properly mounted on coils.

12.2 **Working duty (DIN VDE 0580)**

The working duty ED of a coil is the ratio between energized time **ti** and full cycle time **tc** where **tc = ti + tr**, and **tr** = de-energized time.

ED = (ti / tc) • 100%

All CH coils are rated for **ED = 100%** (i.e. always energized), provided that the temperature limits of their insulation classes are not exceeded.

12.3 **Protection rating (DIN 40050 - Part 9 IEC 60529)**

Protection class is designated by the letter IP followed by two digits: the first digit refers to resistance against penetration of surrounding or foreign solid objects, the second against penetration of water. Protection class doesn't apply to explosion risks or to conditions such as moisture, corrosive agents, mildew etc.

- **IP65** means water protection against **LOW PRESSURE JETS**:water at 0.3 bar (43.5 psi) pressure sprayed from a distance of 2.5 – 3 m (8.2 – 9.8 ft) from every direction
  IP65 coils CANNOT BE PLUNGED INTO WATER OR REMAIN UNDER WATER.
- **IP67** means water protection against **30 MINUTES IMMERSION** under water 1 m (3.3 ft) deep.
- **IP69K** means water protection against **HIGH PRESSURE JETS**:

water at high pressure and temperature, 80-100 bar (1160–1450 psi) and 75-85°C (167°F-185°F), sprayed from a distance of 100–150 mm (3.9–5.9 in) from every direction.

12.4 Coil resistance to thermal shock dunk test

This test, well known and commonly applied in the construction, agricultural and mobile equipment markets, includes several steps :
1) Coil is maintained energized for 1 hour at nominal voltage and ambient temperature 25°C (77°F), or is not energized but heated for 2 hours in oven at 105°C (221°F).
2) Coil is immediately immersed in water at 20 - 25°C (68 – 77°F) for 30 minutes, at minimum depth 300 mm (11.8 in).
3) Coil, when still wet, is tested for moisture ingression and dielectric breakdown with a dielectric tester, like the “Hypot”. With this tester, a voltage differential of 500V DC is applied between the winding and the coil external surface in order to measure the current leakage which must not exceed 100µA (micro-amps).
4) The complete test is performed on samples of 10 coils minimum, and is repeated at least five times.

All coils with EN 175301-803 (ex DIN 43650) connector correctly mounted comply with IP65 protection class.
Coils with integrated Deutsch DT04-2P connector have IP69K protection class, and pass the thermal shock dunk test.

12.5 Heat insulation (DIN VDE 0580)

The actual coil temperature **T** is the result of (**TA** + **ΔT**), where:
TA = ambient temperature, and ΔT = temperature rise due to coil operation.
Example: with TA = 40°C (104°F) and ΔTmax = 115°C (239°F), **T = 155°C (311°F)**; with TA = 40°C (104°F) and ΔTmax = 140°C (284°F), **T = 180°C (365°F)**.
The coil ΔT is determined following a standard procedure (DIN VDE 0580):

- the coil is mounted on a standard cartridge, inserted in a standard steel manifold placed on a wooden surface.
- the coil is maintained energized for 1 hour at nominal voltage, with ambient temperature TA = 20-25°C (68-77°F) and with natural ventilation.

CLASS H coils are rated for **T max = 180°C (356°F)**:
if ambient temperature exceeds the value **Tx = 180°C (356°F)** - **ΔT**, a class H coil cannot be used under continuous duty cycle (ED = 100%); the coil must be periodically de-energized to prevent exceeding the MAX temperature.
In any case, for the correct operation of coils, it is always necessary to provide means for heat dissipation and, at least, natural ventilation.

Caution: when energized, the coil surface temperature can reach quickly (in few minutes of continuous operation) temperature levels of 80-100°C (176-212°F), which is not directly related to the coil ΔT: **care should be taken to avoid any accidental contact of people with the coil surface.**

12.6 AC Service

All CH solenoid valves are designed to operate exclusively with DC power supply. All coil windings are DC.
AC operation is possible using EN 175301-803 (ex DIN 43650) connectors with rectifier.

12.7 **Optional manual emergency for solenoid cartridges**

Upon request, the solenoid cartridges can be equipped with tubes incorporating a manual emergency device for valve operation when the coil cannot be energized, like in case of voltage shortage.
IMPORTANT: manual emergency must always be released before the re-start of thew machine!
Here is a summary of the different options available:

SCREW-OUT KNOB STYLE

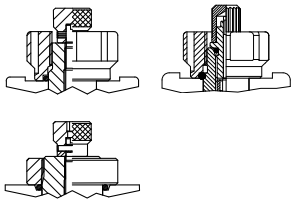

AVAILABLE ON FOLLOWING MODELS:

- 2 way 2 position pilot operated normally closed series 8A / 8I
- 2 way 2 position direct acting poppet style normally closed series 8I
- 2 way 2 position direct acting double lock normally open series 8I
- 3 way 2 position spool style series 8I / 7I
- 4 way 2 position spool style series 8I / 7I

OPERATION
To operate manual override, screw out the knob turning it counterclockwise.
To return to normal valve operation, turn the knob clockwise.

SCREW-IN STYLE

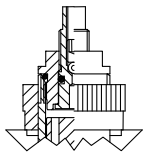

AVAILABLE ON FOLLOWING MODELS:

- Proportional valves series 5A

OPERATION
To operate manual override, screw in the pin turning it clockwise with wrench.
To return to normal valve operation, turn the bolt counterclockwise.

PUSH STYLE

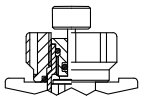

AVAILABLE ON FOLLOWING MODELS:

- 2 way 2 position pilot operated normally open series 8A / 8I
- 2 way 2 position direct acting poppet style normally open series 8I
- 2 way 2 position direct acting double lock normally closed series 8I

OPERATION
To operate manual override, push and hold override button.
To return to normal valve operation, simply release the button.

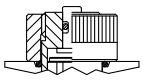

AVAILABLE ON FOLLOWING MODELS:

- 2 way 2 position direct acting double lock normally closed series 7A
- 3 way 2 position direct acting poppet style series 7A

OPERATION
To operate manual override, push and hold override button with tool.
To return to normal valve operation, simply release the button.

PUSH AND TWIST STYLE

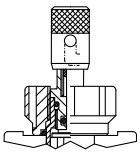

AVAILABLE ON FOLLOWING MODELS:

- 2 way 2 position pilot operated normally open series 8A / 8I
- 2 way 2 position direct acting poppet style normally open series 8I
- 2 way 2 position direct acting double lock normally closed series 8I

OPERATION
To operate manual override button, turn clockwise and release.
To return to normal valve operation, push override button, turn counterclockwise and release.

PUSH AND PULL STYLE

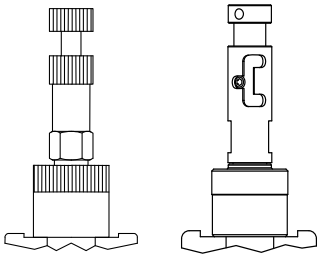

AVAILABLE ON FOLLOWING MODELS:

- 4 way 3 position spool style series 8A / 7I

OPERATION
To operate manual override, push to override S2 coil or pull to override S1 coil and hold override button.
To return to normal valve operation, simply release the button.

SCREW-OUT KNOB STYLE

CABLE OPERATED

HAND OPERATED

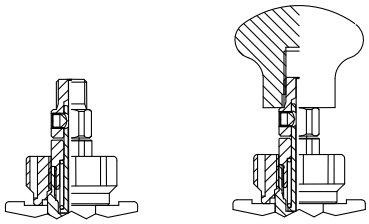

AVAILABLE ON FOLLOWING MODELS:

- 2 way 2 position pilot operated normally closed series 8A size 06

OPERATION

To operate manual override, pull and hold the knob. This override is not detented. Force required to operate is approximately 50 N (11.2 lbs).
This override can also be remote operated by a cable fixed to the M8 thread. In this case the spring may not provide enough force to overcome internal cable friction and the user must provide an external means of returning the cable.

SAFETY PUSH STYLE

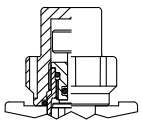

AVAILABLE ON FOLLOWING MODELS:

- 2 way 2 position pilot operated normally open series 8A / 8I
- 2 way 2 position direct acting poppet style normally open series 8I
- 2 way 2 position direct acting double lock normally closed series 8I

OPERATION

To operate manual override, screw out the knob protection after removing wire-locking and push and hold override button.
To return to normal valve operation, simply release the button.

SAFETY PUSH AND TWIST STYLE

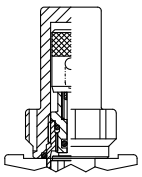

AVAILABLE ON FOLLOWING MODELS:

- 2 way 2 position pilot operated normally open series 8A / 8I
- 2 way 2 position direct acting poppet style normally open series 8I
- 2 way 2 position direct acting double lock normally closed series 8I

OPERATION

To operate manual override, screw out the knob protection after removing wire-locking and turn clockwise and release override button.
To return to normal valve operation, push override button, turn counterclockwise and release.

13. Technical data for Proportional valves CH

GLOSSARY OF TERMS AND DEFINITIONS

Current is the flow of electrons in a conductor, measured in Amperes (A) or milli-amperes (mA) and abbreviated “I”.

Voltage is the potential for current flow in an electrical circuit. It is measured in Volts (V) and abbreviated “V.”

Resistance is a material’s opposition to the flow of electrical current. It depends on physical properties as well as temperature, size and shape of the material. It is measured in Ohms (Ω) and abbreviated “R”. The tolerance allowed on resistance at ambient temperature 20-25°C (68 - 77°F) is ± 7 %.

Hysteresis is the difference in regulated hydraulic parameter (flow / pressure) at a fixed current level when current is increasing vs. when current is decreasing. It is normally expressed as a percentage of the total change in regulated hydraulic parameter (flow / pressure).
Example: With 900 mA input current and increasing current, 20 bar (290 psi) regulated pressure is achieved. With 900 mA input current and decreasing current, 20.8 bar (302 psi) regulated pressure is achieved. There is a 0.8 bar (12 psi) difference in regulated pressure achieved with the same current depending on whether current is increasing or decreasing.
If Maximum Regulated Pressure = 25 bar (363 psi) and Minimum Regulated Pressure = 4 bar (58 psi), the total regulated parameter change is 25 (363) – 4 (58) = 21 bar (305 psi).
Hysteresis = (0.8 / 21) x 100 = 3.8%.

Proportional Controller is a device that converts a low-power input signal into an output signal that is capable of operating the valve. This output signal can be modified to include PWM, ramping, etc.
Pulse Width Modulation (PWM) is a method used to vary the average current induced in a coil using a square wave of fixed frequency, and variable ratios of on/off times.

Dither is a method used to reduce hysteresis by applying a square or triangle wave to the coil voltage. It can be applied to straight DC or PWM.

Maximum Control Current is the point where increasing current input no longer results in an increase in regulated hydraulic parameter (flow / pressure).

I-Min and I-Max represent the minimum and maximum control current induced into a proportional valve coil. The tolerance allowed is ± 10 % and depends largely from coil´s resistance tolerance.

Ramping is the ability to control the rate of change of the output of an electronic controller.

VERY IMPORTANT:

a. It is strongly recommended to use pulse-width-modulation (PWM) as input signal to coils rather than straight DC. Our tests indicate that PWM input signal allows best valve performance, significantly reducing hysteresis and response times of all our proportional valves. All features shown and explained in next pages are available from many industry-common electronic controllers, including Proportional Controllers described in this catalogue.
b. CH recommends to use always 12 V DC coils in combination with 24 V DC supply voltage to the electronic controller. This allows to use a much wider control current range independently from coil temperature, since anyway current is regulated by the electronic controller and there is no coil overheating risk.

PULSE WIDTH MODULATION

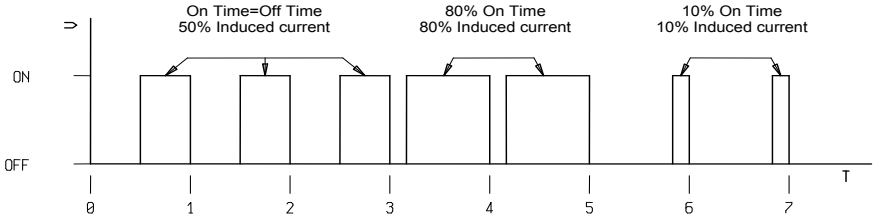

HYSTERESIS CHARACTERISTIC WITH 120 Hz PWM

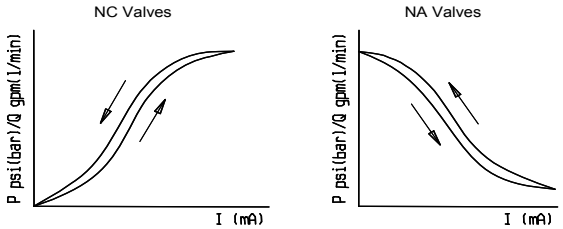

For normally closed proportional valves, the hysteresis curve with increasing current is always lower than the curve with decreasing current.
The opposite is true for normally open proportional valves as shown.

REPEATABILITY RANGE

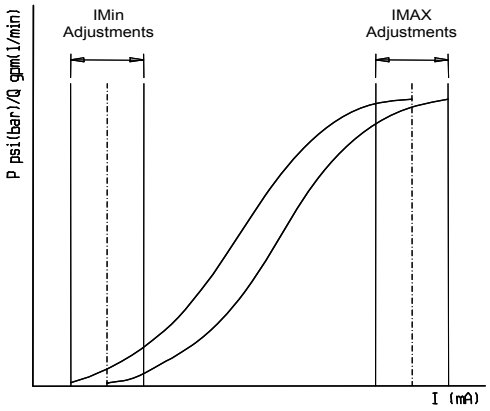

An important control feature of electronic controllers is I-Min / I-Max adjustment.
This feature allows control of the regulated hydraulic parameter across the full range of the electronic controller by eliminating deadband.

RAMP SLOPE CONTROL

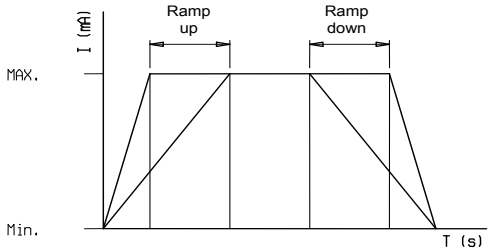

Many commercially available controllers also offer a ramping control feature.
This feature allows to adjust the current rate of change between the I-Min and I-Max setpoints.

14. **European machine directive 2006/42/CE**

The CH valves or components described in this catalogue can be employed in machinery or systems which need to comply with the European Machine Directive
In such case, the CH valves, manifolds, components and assemblies must be fitted in compliance with all the relevant technical data sheet applicable to the product, and shall not be operated, adjusted or disassembled before the complete machinery where they are incorporated has been declared to be in compliance with the Machine Directive 2006/42/CE.

15. General technical data for compact power modules

Through the years DCOC has developed a highly evolved modular system resulting in powerful, flexible and cost effective power pack range, identified as **“compact power modules”**. In its easier configuration, a “compact power module” is an assembly of electric motor, central manifold with valves, pump, oil tank and a few connection elements. The central manifold, with its built-in valves, allows to achieve a large variety of hydraulic control circuits. If more complex circuits are needed, modular integrated blocks can be added by flange mounting, or interfacing, to the central manifold to extend its capabilities.

15.1 Power module selection

- Choose the circuit which meets your application requirements.
- Take note of all dimensions resulting from the basic components chosen for your application. NOTE: dimensions may vary slightly and should be confirmed by DCOC, if the assembly is to be installed in a space with narrow clearance.
- The tank capacity and the tank dimensions need to be large enough to assure proper pump suction: there must always be a reserve of oil in the tank when all cylinders are fully extended and avoid overflow when cylinders are fully retracted.
- The tank must be evaluated also for best separation of air from oil, and for settling down oil contamination. It should be placed in a space with, at least, natural ventilation and it should permit enough heat dissipation to prevent fluid temperature from exceeding 60°C (140°F).
- Select the electric motor by evaluating the power needed and the motor compliance with the heat developed during the expected run time (or “duty cycle”).
  Motor performance diagrams for “continuous running” (S1), “short time running” (S2) or “intermittent periodic running” (S3) are available in the catalogue. In case of doubt, consult the factory.

15.2 Power module installation

The mounting position is basically un-restricted; just avoid installations that could compromise the pump suction. It is recommended to support the power module on vibration dampening blocks when the mounting structure is expected to vibrate.

15.3 Hydraulic fluid for power module

It should meet all specifications given for the other DCOC valves and components, except that:

- **the viscosity** should remain within the range 10 to 300 cSt (centistokes); best 15 to 120 cSt.
- **the temperature** should remain within the range -15°C and +80°C (5°F and176°F). In fact, these are the temperature limits generally recommended for the gaskets employed in these power modules.

15.4 Cleaning and maintenance

All components of the hydraulic circuit, including hoses and actuators, must be flushed clean before assembling, because the power module only has a suction filter.
The hydraulic fluid should be replaced after the first 100 hours, and then every 3000 hours, or, at least, once a year.

15.5 Wiring and starting-up

The wiring between battery and electric motor should be selected in order to avoid excessive voltage drop (recommended less than 1 V).
It is strictly forbidden to allow the backwards rotation of the pump even at the first starting: to prevent reverse rotation, **the wiring polarities must be correctly connected**.

Caution: when energized, the surface temperature of the electric motor could reach temperature levels of 60–80°C (140–176°F): **care should be taken to avoid any accidental contact of people with the motor surface**.

Rexroth
Bosch Group

Technical data for Compact Directional valves

Introduction:
Following technical data refers to Compact Hydraulics valves (RE 90010-06 chapters 2,3,4 and 5)

1. General

Bosch Rexroth Product Area 2 - Compact Hydraulics (CH) proposes a wide range of hydraulic components for applications in hydraulic circuits of mobile and industrial machinery. Detailed information about product performance, selection, installation and technical data can be obtained from our Customer Service Organization; here you may find a summary of general specifications which apply to all our CH hydraulic products with the aim to provide general guidance only.

2. Hydraulic fluids

Mineral oil based hydraulic fluids suitable for hydraulic systems can be used; they should have physical lubricating and chemical properties as specified by:

- MINERAL OIL BASED HYDRAULIC FLUIDS HL (DIN 51524 part 1)
- MINERAL OIL BASED HYDRAULIC FLUIDS HLP (DIN 51524 part 2).

For use of environmentally friendly fluids (vegetable or polyglycol base), or other fluids, please consult CH.

2.1 Fluid viscosity

When not differently specified in the individual data sheet, the fluid viscosity should remain within the range 5 to 420 cSt (centistokes). Hydraulic fluids are available in different viscosity classes identified by the ISO VG number, which corresponds to the kinematic viscosity at 40°C (104°F). Here is a table showing typical viscosity changes between 0°C and 100°C (32°F and 212°F) for mineral oil based fluids having various viscosity classes. The fluid should be selected with the aim to achieve an appropriate operating viscosity at the expected working temperatures.

VISCOSITY CLASS	KINEMATIC VISCOSITY - (cSt)		
	MAX at 0°C (32°F)	MED at 40°C (104°F)	MIN at 100°C (212°F)
ISO VG 10	90	10	2.4
ISO VG 22	300	22	4.1
ISO VG 32	420	32	5
ISO VG 46	780	46	6.1
ISO VG 68	1400	68	7.8
ISO VG 100	2560	100	9.9

Note: all main performance curves and specifications shown in CH technical literature are obtained using mineral based fluid ISO VG 32, i.e. 32 cSt at 40°C (104°F), with an oil temperature of 40-50°C (104-122°F).
More detailed technical characteristics are available at CH.

2.2 Fluid temperature recommendation

CH components are generally equipped with BUNA-N seals and, for this reason, the fluid temperature should remain within the -20°C and +80°C range (-4°F and +212°F). Temperature of -30°C (-22°F) is generally acceptable when the machine is not working. Temperature peaks up to 105°C (221°F) are allowed for short time. In case of temperatures outside this range, consult the company.

2.3 Fluid cleanliness requirements

The cause of malfunctions in hydraulic systems and components is often found to be excessive fluid contamination. The hard contaminant particles in the fluid wear the hydraulic components and can lead spools to stick in the valve body with consequent internal leakage and system inefficiency. For the correct operation of CH components it is necessary to adopt filtration methods which guarantee for life the specified fluid cleanliness level. It is important to ensure that hydraulic fluids are brought to the appropriate cleanliness level prior filling up the systems, and, when in doubt, also to flush the hydraulic components prior to installation.
Maximum allowed value of fluid contamination is mentioned on individual data sheet.
If not specified, please follow the table below

TYPE OF SYSTEM TYPE OF VALVE	OIL FILTRATION RECOMMENDATIONS		
	Cleanliness class recommended		Absolute filtration (micron rating) (**)
	ISO 4406 : 1999	NAS 1638 (*)	
Systems / components operating at HIGH PRESSURE > 250 bar (3600 psi) HIGH DUTY CYCLE APPLICATIONS Systems / components with LOW dirt tolerance	18 / 16 / 13	7 - 8	5
Systems / components operating at MEDIUM HIGH PRESSURE Systems / components with moderate dirt tolerance	19 / 17 / 14	9	10
Systems / components operating at LOW PRESSURE < 100 bar (1500 psi) LOW DUTY CYCLE APPLICATIONS Systems / components with GOOD dirt tolerance	20 / 18 / 15	10 - 11	20

(*) Contamination class NAS 1638 (National Aerospace Standard, conceived in the early 60's, officially superseded since June 2001): it is still followed and it is determined by counting the total particles of different size ranges contained in 100 ml of fluid.

(**) Absolute filtration: is a characteristic of each type of filter; approximately, it refers to the size (expressed in microns) of the largest spherical particle which may pass through the filter.

3. **Pressure setting**

Compact directional valves are supplied pre-set at the standard pressure setting shown by the relevant catalogue sheet.Whenever the application requires a re-adjustment, please ensure that the limits of the indicated pressure range and maximum working pressure are never exceeded.

4. **Sealing of valve adjusters**

Special plastic sealing caps for service are available for most CH valves and cartridges. Upon request, valves can be supplied factory sealed.

5. **Storage of new components**

The components shall not be exposed to direct sun light nor to sources of heat or ozone (like electric motors running), and should be stored in their original, protective packing at ambient temperature within the range -20°C and +50°C (-4°F and 122°F).

6. **Ports**

G type ports (ISO 228-1) are often standard on components with body for line connection; SAE sizes (straight thread), JIS or metric ports can be manufactured upon request.

7. **Body materials**

- Valves and integrated manifolds for medium working pressure (up to 250 bar) can be made of high strength wrought aluminium, black anodized upon request.
- Housings for modular, solenoid operated directional valves and flow diverters are made of high strength cast iron, zinc plated with yellow trivalent chrome treatment.

8. **Seals**

O-Rings: Buna N (acrylonitrile butadiene), also named NBR (according to ASTM), compatible with fluids having mineral oil base, water-in-oil emulsions, and water-glycol fluids. These seals are standard for temperatures within the range -30°C and +100°C (-22°F and +212°F).
Back-up rings and Slide rings: strengthened PTFE (Politetrafluoroetilene like Teflon®, Lubriflon®, Ecoflon®, or similar).
Note: the seal materials are compatible with the fluids normally used in hydraulic systems; in case of special fluids, if you suspect incompatibility between the fluid used and the standard seals, contact the CH service network.

9. **Installation / Maintenance**

- Ensure that all matching surfaces are clean, without contamination.
- Ensure that all seals and back-up rings for the matching surfaces are flawless and correctly placed.
- Do not put any sealing material other than the standard seals.
- Place in position the valve, then, by hand, insert the fittings and the locating screws.
- During the assembly of the valve and/or the group of valves, refer to the hydraulic scheme and to the name assigned to each port.
- Do not hang the valves and/or the group of valves to the hydraulics pipes, but always use the specific fixing holes.
- In case of use of screw and push and twist overrides, the command must be removed before starting the machine
- In case of cartridge valve, check that the cavity is clean, without sharp edges or chips. Dip the cartridge in clean oil, then insert it into the cavity and screw it in by hand, until you begin to compress the top O-Ring.
- Finally tighten with a calibrated torque wrench and torque up to the specifications shown in the catalogue.
- Use gloves in order to avoid accidental injuries during installation or maintenance.
- Do not grab / handle product from moving parts (i.e. cables, levers...etc.)
- All valves or groups of valves are attributable to pressure vessels. It‘s always recommended to place the components in a closed but ventilated compartment, able to protect the environment and users in case of accidental ejection of material under pressure (fittings, pipes, plugs expander ... etc.)
- Do not tamper with the valve. Only the substitution of the valve itself, the coil or the retainer kit are generally allowed

- Remove tension from the coils before any kind of maintenance / installation operation
- Check the connections and the cable section with reference to the coils nominal current
- During the first start of the machine, please ensure that the grounding system is connected and stay away from moving parts.

10. **Cavities for screw-in cartridges**

CH has developed a complete range of cartridges which fit the cavity patterns with UN/UNF threads, according to SAE standards, nominal sizes 08-10-12-16-20. Internal parts of cartridges are designed with a global view of our comprehensive variety of hydraulic products; accordingly, our technology has been optimized in order to employ few basic parts for many different valves for best reliability, cost effectiveness and availability. Further, we can propose our cartridges in different versions, with a variety of external shells in order to fit other cavity patterns, such as ISO/METRIC, or special industrial patterns.

11. **Coils**

11.1 **Coil installation on solenoid cartridges**

COIL INSTALLATION

COIL WITH O-RING SEATS (S7-S5-R7)

- It is recommended to follow these steps:
- Insert 1st O-Ring (see drawing)
- Insert coil
- Insert 2nd O-Ring (see drawing)
- Tighten BY HAND coil retaning nut to the torque specified in the cartridge catalogue page.

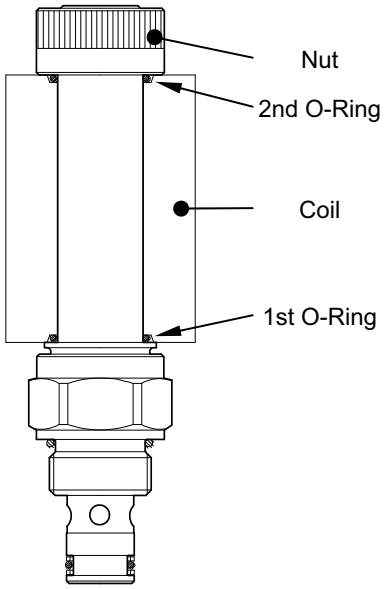

OIL WITHOUT O-RING SEATS (S8-356)

- It is recommended to follow these steps:
- Insert 1st O-Ring (see drawing)
- Insert coil
- Tighten BY HAND coil retaining nut to the torque specified in the cartridge catalogue page. The 2nd O-Ring is fixed inside the nut.

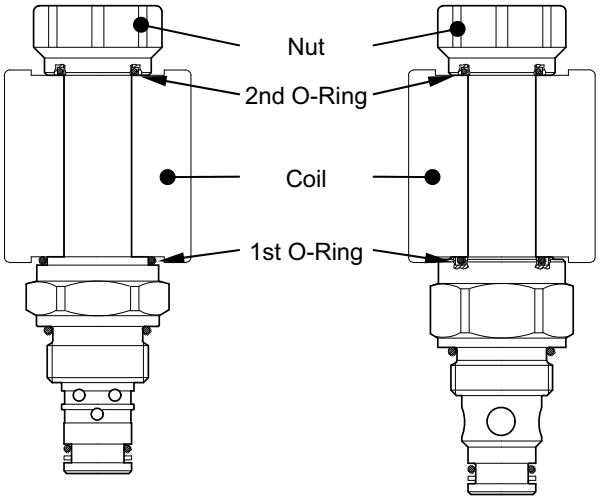

IMPORTANT: O-Rings are the only protection against water infiltration between tube and coil, which may lead in short time to coil failure. The proper mounting of both O-Rings is therefore necessary to ensure normal life of coils when operating in presence of water, ice, moisture etc. Oil Control cannot guarantee any IP protection degree if both O-Rings are not properly mounted on coils.

11.2 **Working duty (DIN VDE 0580)**

The working duty ED of a coil is the ratio between energized time **ti** and full cycle time **tc** where **tc = ti + tr**, and **tr** = de-energized time.

$$ED = (ti / tc) \cdot 100\%$$

All CH coils are rated for **ED = 100%** (i.e. always energized), provided that the temperature limits of their insulation classes are not exceeded.

11.3 **Protection rating (DIN 40050 - Part 9 IEC 60529)**

Protection class is designated by the letter IP followed by two digits: the first digit refers to resistance against penetration of surrounding or foreign solid objects, the second against penetration of water. Protection class doesn't apply to explosion risks or to conditions such as moisture, corrosive agents, mildew etc.

- **IP65** means water protection against **LOW PRESSURE JETS**:water at 0.3 bar (43.5 psi) pressure sprayed from a distance of 2.5 – 3 m (8.2 – 9.8 ft) from every direction
  IP65 coils CANNOT BE PLUNGED INTO WATER OR REMAIN UNDER WATER.
- **IP67** means water protection against **30 MINUTES IMMERSION** under water 1 m (3.3 ft) deep.
- **IP69K** means water protection against **HIGH PRESSURE JETS**:

water at high pressure and temperature, 80-100 bar (1160–1450 psi) and 75-85°C (167°F-185°F), sprayed from a distance of 100–150 mm (3.9–5.9 in) from every direction.

11.4 **Coil resistance to thermal shock dunk test**

This test, well known and commonly applied in the construction, agricultural and mobile equipment markets, includes several steps :
1) Coil is maintained energized for 1 hour at nominal voltage and ambient temperature 25°C (77°F), or is not energized but heated for 2 hours in oven at 105°C (221°F).
2) Coil is immediately immersed in water at 20 - 25°C (68 – 77°F) for 30 minutes, at minimum depth 300 mm (11.8 in).
3) Coil, when still wet, is tested for moisture ingression and dielectric breakdown with a dielectric tester, like the "Hypot". With this tester, a voltage differential of 500V DC is applied between the winding and the coil external surface in order to measure the current leakage which must not exceed 100µA (micro-amps).
4) The complete test is performed on samples of 10 coils minimum, and is repeated at least five times.

All coils with EN 175301-803 (ex DIN 43650) connector correctly mounted comply with IP65 protection class.
Coils with integrated Deutsch DT04-2P connector have IP69K protection class, and pass the thermal shock dunk test.

11.5 **Heat insulation (DIN VDE 0580)**

The actual coil temperature **T** is the result of (**TA** + **ΔT**), where:
TA = ambient temperature, and ΔT = temperature rise due to coil operation.
Example: with TA = 40°C (104°F) and ΔTmax = 115°C (239°F), **T = 155°C (311°F)**; with TA = 40°C (104°F) and ΔTmax = 140°C (284°F), **T = 180°C (365°F)**.
The coil ΔT is determined following a standard procedure (DIN VDE 0580):

- the coil is mounted on a standard cartridge, inserted in a standard steel manifold placed on a wooden surface.
- the coil is maintained energized for 1 hour at nominal voltage, with ambient temperature TA = 20-25°C (68-77°F) and with natural ventilation.

CLASS H coils are rated for **T max = 180°C (356°F)**:
if ambient temperature exceeds the value **Tx = 180°C (356°F)** - **ΔT**, a class H coil cannot be used under continuous duty cycle (ED = 100%); the coil must be periodically de-energized to prevent exceeding the MAX temperature.
In any case, for the correct operation of coils, it is always necessary to provide means for heat dissipation and, at least, natural ventilation.

Caution: when energized, the coil and valve surface temperature can reach quickly (in few minutes of continuous operation) temperature levels of 80-100°C (176-212°F), which is not directly related to the coil ΔT: **care should be taken to avoid any accidental contact of people with the coil and valve surfaces.**

11.6 **AC Service**

All CH solenoid valves are designed to operate exclusively with DC power supply. All coil windings are DC.
AC operation is possible using EN 175301-803 (ex DIN 43650) connectors with rectifier.

11.7 **Optional manual emergency for solenoid cartridges**

Please refer to the data sheet RE 18350-50

12. Technical data for Proportional valves CH

GLOSSARY OF TERMS AND DEFINITIONS

Current is the flow of electrons in a conductor, measured in Amperes (A) or milli-amperes (mA) and abbreviated “I”.

Voltage is the potential for current flow in an electrical circuit. It is measured in Volts (V) and abbreviated “V.”

Resistance is a material’s opposition to the flow of electrical current. It depends on physical properties as well as temperature, size and shape of the material. It is measured in Ohms (Ω) and abbreviated “R”. The tolerance allowed on resistance at ambient temperature 20-25°C (68 - 77°F) is ± 7 %.

Hysteresis is the difference in regulated hydraulic parameter (flow / pressure) at a fixed current level when current is increasing vs. when current is decreasing. It is normally expressed as a percentage of the total change in regulated hydraulic parameter (flow / pressure).
Example: With 900 mA input current and increasing current, 20 bar (290 psi) regulated pressure is achieved. With 900 mA input current and decreasing current, 20.8 bar (302 psi) regulated pressure is achieved. There is a 0.8 bar (12 psi) difference in regulated pressure achieved with the same current depending on whether current is increasing or decreasing.
If Maximum Regulated Pressure = 25 bar (363 psi) and Minimum Regulated Pressure = 4 bar (58 psi), the total regulated parameter change is 25 (363) – 4 (58) = 21 bar (305 psi).
Hysteresis = (0.8 / 21) x 100 = 3.8%.

Proportional Controller is a device that converts a low-power input signal into an output signal that is capable of operating the valve. This output signal can be modified to include PWM, ramping, etc.
Pulse Width Modulation (PWM) is a method used to vary the average current induced in a coil using a square wave of fixed frequency, and variable ratios of on/off times.

Dither is a method used to reduce hysteresis by applying a square or triangle wave to the coil voltage. It can be applied to straight DC or PWM.

Maximum Control Current is the point where increasing current input no longer results in an increase in regulated hydraulic parameter (flow / pressure).

I-Min and I-Max represent the minimum and maximum control current induced into a proportional valve coil. The tolerance allowed is ± 10 % and depends largely from coil´s resistance tolerance.

Ramping is the ability to control the rate of change of the output of an electronic controller.

VERY IMPORTANT:

a. It is strongly recommended to use pulse-width-modulation (PWM) as input signal to coils rather than straight DC. Our tests indicate that PWM input signal allows best valve performance, significantly reducing hysteresis and response times of all our proportional valves. All features shown and explained in next pages are available from many industry-common electronic controllers, including Proportional Controllers described in this catalogue.
b. CH recommends to use always 12 V DC coils in combination with 24 V DC supply voltage to the electronic controller. This allows to use a much wider control current range independently from coil temperature, since anyway current is regulated by the electronic controller and there is no coil overheating risk.

PULSE WIDTH MODULATION

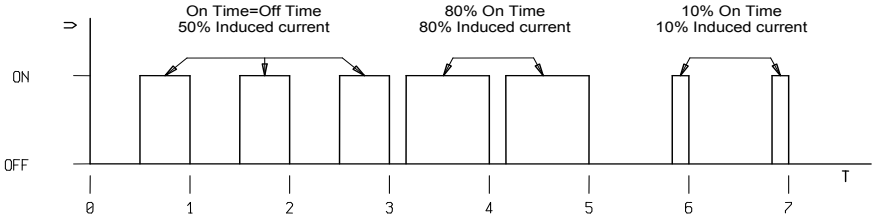

HYSTERESIS CHARACTERISTIC WITH 120 Hz PWM

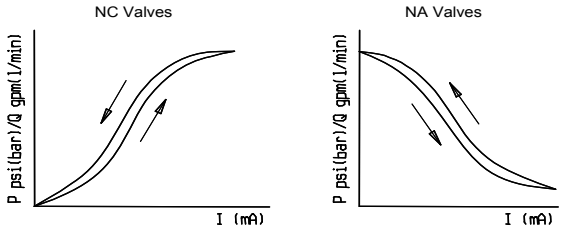

For normally closed proportional valves, the hysteresis curve with increasing current is always lower than the curve with decreasing current.
The opposite is true for normally open proportional valves as shown.

REPEATABILITY RANGE

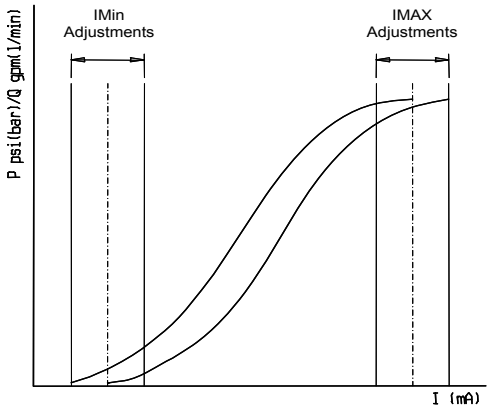

An important control feature of electronic controllers is I-Min / I-Max adjustment.
This feature allows control of the regulated hydraulic parameter across the full range of the electronic controller by eliminating deadband.

RAMP SLOPE CONTROL

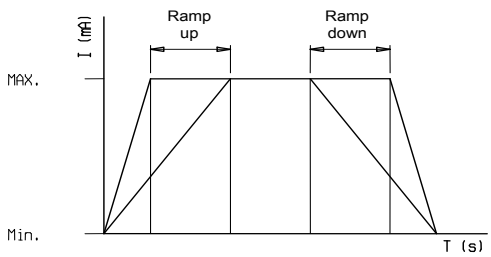

Many commercially available controllers also offer a ramping control feature.
This feature allows to adjust the current rate of change between the I-Min and I-Max setpoints.

13. **European machine directive 2006/42/CE**

The CH valves or components described in this catalogue can be employed in machinery or systems which need to comply with the European Machine Directive
In such case, the CH valves, manifolds, components and assemblies must be fitted in compliance with all the relevant technical data sheet applicable to the product, and shall not be operated, adjusted or disassembled before the complete machinery where they are incorporated has been declared to be in compliance with the Machine Directive 2006/42/CE.

Code Index - Product Catalog Mobile Hydraulics Part 6

Compact Hydraulics: Load holding / Motion control valves, Compact Directional Valves, Compact Power Modules

Code	Description	Data sheet	Page
07062051	VBSO-DE-CR-EA-33	18307-93	179
07067030	A-VBSO-CR-EA-42	18307-96	185
07067399	A-VBSO-CR-EA-42	18307-95	183
060208052	VBSO-DE-VF-30-FM	18308-54	231
060208061	VBSO-DE-VF-30-FM	18308-59	241
051601XYZ	VSDI-80	18308-19	197
051603XYZ	VSDI-30	18308-15	189
051605XYZ	VSDI-VA-80	18308-20	199
051615XYZ	VSDI-VA-80-FM	18308-21	201
051617XYZ	VSDI-30-FM	18308-17	193
051633XYZ	VSDI-30-FM	18308-16	191
051648XYZ	VSDI-VA-30-FM	18308-18	195
052106XYZ	VSQ-10	18309-84	417
052107XYZ	VSQ-30	18309-85	419
052111XYZ	VSQ-CC-30	18309-87	423
052115XYZ	VSQP-150	18309-86	421
052406XYZ	VSQP-CC-150	18309-88	425
053501XYZ	VBSO-SE-FA-RD-90	18308-41	221
053738XYZ	VRBC90-VS30-CC-FC2	18310-31	281
054101XYZ	VBSO-SE	18307-43	97
054106XYZ	VBSO-SE-CC	18307-51	117
054201XYZ	VBSO-DE	18307-63	147
054205XYZ	VBSO-DE-CC	18307-68	161
054206XYZ	VBSO-DE-FC2	18307-64	149
054247XYZ	VBSO-DE-NN	18307-57	133
054248XYZ	VBSO-DE-NN-FC2	18307-58	135
054413XYZ	VBSO-DE-CR-33	18307-92	177
054431XYZ	VBSO-DE-CCAP-33-FC2	18307-71	169
05443213YZ	VBSO-DE-33	18308-65	153
054432XYZ	VBSO-DE-33	18307-65	151
054433XYZ	VBSO-DE-33-FC2	18307-66	155
054458XYZ	VBSO-DE-CR-78	18307-90	173
054481XYZ	VBSO-DE-CR-EE-33	18307-94	181
054483XYZ	VBSO-DE-CR-30	18307-91	175
054524XYZ	VBSO-SE-FA-RD-30	18308-40	219
054570XYZ	VBSO-SE-FA-30	18308-37	213
054571XYZ	VBSO-SE-FA-30	18308-38	215
054975XYZ	VRBC90-VS30	18310-30	279

Code	Description	Data sheet	Page
054981XYZ	VBSO-SE-FA-33	18308-39	217
055201X03Z	VSO-SE	18307-02	27
055201X04Z	VSO-SE	18307-03	29
055202XYZ	VSO-SE-FC1	18307-05	33
055211X02Z	VSO-SE-DL	18307-07	37
055211X03Z	VSO-SE-DL	18307-08	39
055211X09Z	VSO-SE-DL	18307-06	35
055224XYZ	VSO-SE-PS	18307-11	45
055226XYZ	VSO-SE-DL-SX	18307-12	47
055227XYZ	VSO-SE-DL-DX	18307-13	49
055239XYZ	VSO-SE-DL-FCV	18307-09	41
055279XYZ	VSO-SE	18307-01	25
055286XYZ	VSO-SE-FC1	18307-04	31
0552KXYZ	VSO-SE-DL-FCV-SX	18307-14	51
0552KXYZ	VSO-SE-DL-FCV-DX	18307-15	53
055301X03Z	VSO-DE	18307-17	57
055301X04Z	VSO-DE	18307-18	59
055302XYZ	VSO-DE-FC2	18307-20	63
055303X02Z	VSO-DE-L	18307-22	67
055303X03Z	VSO-DE-L	18307-23	69
055303X09Z	VSO-DE-L	18307-21	65
055343XYZ	VSO-DE	18307-16	55
055344XYZ	VSO-DE-FC2	18307-19	61
057109X02Z	VAA-B-SIC50-38	18308-85	251
057144X02Z	VAA-B-SICN-ST-50	18308-72	253
057144X04Z	VAA-B-SICN-ST-150	18308-73	255
057144X05Z	VAA-B-SICN-ST-250	18308-74	257
057145X02Z	VAA-B-SICN-ST-VF-50	18308-75	259
057145X04Z	VAA-B-SICN-ST-VF-150	18308-76	261
057145X05Z	VAA-B-SICN-ST-VF-250	18308-77	263
057146X02Z	VAA-B-SICN-PDRM-50	18308-78	265
057146X04Z	VAA-B-SICN-PDRM-150	18308-79	267
057146X05Z	VAA-B-SICN-PDRM-250	18308-80	269
057147X02Z	VAA-B-SICN-PDRM-VF-50	18308-81	271
057147X04Z	VAA-B-SICN-PDRM-VF-150	18308-82	273
057147X05Z	VAA-B-SICN-PDRM-VF-250	18308-83	275
059006XYZ	VEP-VSP2	18310-13	437
059019XYZ	VRP-R-VU	18309-73	411
059027XYZ	VRP-R	18309-72	409
059033XYZ	VRPC-150	18309-74	413
059304XYZ	BM-N	18310-11	435
059803XYZ	VEM	18310-10	433

Code	Description	Data sheet	Page
05990500Y	VFC	18309-98	429
060301X	VBSO-DE-VF-30-VSDI-FM	18308-55	233
060301X	VBSO-DE-VF-30-FM	18308-56	235
060301X	VBSO-DE-VF-30-VSDI-FM	18308-57	237
060301X	VBSO-DE-VF-30-VSDI-FM	18308-58	239
083520XYZ	A-VBSO-SE-78	18307-34	77
08352307YZ	A-VBCN-15-FC	18309-13	309
08371818YZ	A-VBCN-18-FC	18309-14	311
083769XYZ	A-VBSO-SE-LA-33	18308-35	209
083770XYZ	A-VBSO-SE-LA-42	18308-36	211
083927XYZ	A-VBSO-SE-CC-78	18308-44	107
083928XYZ	A-VBSO-SE-90-PL	18308-45	95
083930XYZ	A-VBSO-SE-42	18308-46	105
083937XYZ	A-VBCN-22-SX-RE-FC	18309-17	319
083938XYZ	A-VBCN-22-DX-RE-FC	18309-18	317
083959XYZ	A-VBSO-SE-30-PI-PL	18307-32	87
083960XYZ	A-VBSO-SE-30-FC2-PI-PL	18307-33	91
083962XYZ	A-VBSO-SE30-FC1	18307-31	89
083964XYZ	A-VBCN-15-DX-RE-FC	18309-15	313
083965XYZ	A-VBCN-15-SX-RE-FC	18309-16	315
083990XYZ	A-VBC14-FC2	18308-99	321
084101XYZ	A-VBSO-SE-30	18307-37	83
084102XYZ	A-VBSO-SE-30-FC1	18307-38	85
084205XYZ	A-VBSO-DE-CC	18307-69	163
084396XYZ	A-VBSO-SE-CC-30	18307-47	109
084404XYZ	A-VBSO-DE-CC-30	18307-67	159
084410XYZ	A-VBSO-DE-VF-30	18308-53	229
084430XYZ	A-VBSO-DE-30-FC1	18307-60	139
084431XYZ	A-VBSO-DE-CCAP-78-FC2	18308-64	165
084433XYZ	A-VBSO-DE-33-FC2	18308-04	157
084460XYZ	A-VBSO-DE-SAF	18307-62	143
084489XYZ	A-VBSO-DE-90-FC2	18308-63	145
084494XYZ	A-VBSO-DE-CCAP-33	18307-70	167
084517XYZ	A-VBSO-SE-CC-30-PL	18307-48	111
084519XYZ	A-VBSO-SE-CC-30-PL-FC1	18307-49	113
084521XYZ	A-VBSO-SE-CC-30-PL-FC2	18307-50	115
084538XYZ	A-VBSO-SE-FA-42	18308-42	223
084539XYZ	A-VBSO-SE-FA-42	18308-43	225
084585XYZ	A-VBSO-SE-33-PL	18307-44	99
084586XYZ	A-VBSO-SE-CCAP-33-PL	18307-52	121
084587XYZ	A-VBSO-SE-33-PL-FC1	18307-45	101
084588XYZ	A-VBSO-SE-CCAP-33-PL-FC1	18307-53	123

Code	Description	Data sheet	Page
084592XYZ	A-VBSO-SE-CCAP-33-PL-FC2	18307-54	125
084594XYZ	A-VBSO-SE-33-PL-FC2	18307-46	103
084598XYZ	A-VBSO-SE-CCAP-78	18308-48	119
084611XYZ	A-VBSO-DE-78	18307-55	129
084632XYZ	A-VBSN-DE-VF-20A-FM	18308-61	245
084633XYZ	A-VBSN-DE-VF-20A-FM	18308-62	247
084635XYZ	A-VBSN-DE-VF-12A-FM	18308-60	243
084636XYZ	A-VBSO-DE-78-FC2	18307-56	131
084772XYZ	A-VBSO-SE-30-SAF	18307-42	93
084783XYZ	A-VBC-90-FC	18309-07	297
084784XYZ	A-VBC-33-FC	18309-09	301
084785X64Z	A-VBC-42-FC	18309-12	307
084785X72Z	A-VBC-42-FC	18309-10	303
084785X73Z	A-VBC-42-FC	18309-11	305
084796XYZ	A-VBC-90-SX	18309-04	291
084797XYZ	A-VBC-90-DX	18309-03	289
084811XYZ	A-VBSO-DE-30-PI	18307-72	137
084812XYZ	A-VBSO-DE-30-FCB-PI	18307-73	141
084924XYZ	A-VBC-33-DX	18309-05	293
084925XYZ	A-VBC-33-SX	18309-06	295
084926XYZ	A-VBC-33-FC	18309-08	299
084929XYZ	A-VBC-78-DX	18309-01	285
084930XYZ	A-VBC-78-SX	18309-02	287
084968XYZ	A-VBSO-SE-78-PL-FC2	18307-36	81
084985XYZ	A-VBSO-SE-78-PL	18307-35	79
084991XYZ	A-VBSO-SE-CCAP-42	18308-47	127
085291XYZ	A-VSO-SE-LB	18307-10	43
085357XYZ	A-VSO-DE-LB	18307-24	71
08640500Y	A-VSL-R	18310-18	439
088111XYZ	A-VAA-CC-150	18308-24	203
088116XYZ	A-VAA-CC-42-FM A2FE-45-56-63 series	18308-25	205
0M220350Y	VRFC2-L	18309-34	329
0M2203X97	VRFC2	18309-32	325
0M2203XY	VRFC2	18309-33	327
0M2403XY	VRFC2-VU	18309-36	333
0M280380YZ	A-VRFC2-VEI-VS-LS	18309-64	385
0M320350Y	VRFC3-L	18309-40	341
0M3203X05	VRFC3	18309-39	339
0M3203X97	VRFC3	18309-37	335
0M3203XY	VRFC3	18309-38	337

Code	Description	Data sheet	Page
0M330350Y	VRFC3-VS	18309-46	353
0M3303XY	VRFC3-VS	18309-45	351
0M3603XY	VRFC3-VS-VEI	18309-47	355
0M3803X04	VRFC3-VS-BPE	18309-49	359
0M3803XY	VRFC3-VS-BPE	18309-48	357
0M3903X04	VRFC3-VU	18309-44	349
0M3903XY	VRFC3-VU	18309-43	347
0M420350Y	VRFC3C	18309-52	365
0M4203XY	VRFC3C	18309-50	361
0M431280YZ	A-VRFC3C-VEI-VS	18309-54	373
0M432080YZ	A-VRFC3C-VEI-VS	18309-53	367
0M432180YZ	A-VRFC3C-VEI-VS-LS	18309-63	379
0M51039002Z	DRF	18309-55	391
0M51039003Z	DRF	18309-56	393
0M51039004Z	DRF	18309-57	395
0M51039005Z	DRF	18309-58	397
0MB203XY	A-VRFC2	18309-35	331
0MC203X05	A-VRFC3	18309-42	345
0MC203XY	A-VRFC3	18309-41	343
0MD203XY	A-VRFC3C	18309-51	363
0ME1039004Z	A-DRF	18309-61	403
0ME1039005Z	A-DRF	18309-62	405
0ME1219002Z	A-DRF	18309-59	399
0ME1219003Z	A-DRF	18309-60	401
B8_08_	EDBZ	18300-52	491
B8_48_	EDBZ-VR	18300-53	499
B8_58E401_	EDBZ-VEI	18300-54	507
B8_80__S_	EDB-P	18300-55	515
D8_5_	EDD-XZ	18301-12	609
DL	DL Series	18306-03	1199
EPM-DE-17	EPM-DE-18	18301-30	687
KE - K - KS	KE, K and KS Series	18306-02	1067
L5010_	LC04Z	18303-01	939
L5080_	LC04P	18303-03	957
L50L0_	LC04-LV	18303-02	949
L5235X...	V.LC2-IA12	18310-24	441
L6040_	LC04M-VR	18305-07	973
L6090_ L6095_	LC04M-CB	18303-04	965
L700_	VS 70	18302-01	773
L705_	VS81, VS82, VS84, VS85	18302-02	781

Code	Description	Data sheet	Page
L706_	VS91, VS92, VS95	18302-03	789
L710_	VS120, VS125, VS129	18302-04	799
L711_	VS120F, VS125F	18302-08	841
L721_	VS151, VS152, VS155	18302-05	807
L725_	VS161, VS165	18302-06	815
L732_	VS241F, VS245F, VS246F, VS247F	18302-09	849
L739_	VS270F	18302-12	859
L745_	VS281F, VS285F, VS286F, VS287F, VS289F	18302-10	869
L753_	VS311, VS312, VS315	18302-07	823
L755	VS400	18302-11	831
L765_	VS570, VS575	18302-13	879
L8_10_	ED1-Z	18301-01	525
L8_11_	ED2-DZ	18301-02	535
L8_80_	ED4-P	18301-06	573
L8_L1_	ED-LV	18301-08	589
L8_P5_	ED-IP	18301-07	583
L8011_	ED2S-DZ	18301-03	545
L808003_	ED4-PTC	18301-05	563
L808003P_	ED4-PT	18301-04	553
L808103P...	ED4-PT1	18301-13	597
L8510_	EDC-Z	18301-10	631
L8511_	EDC-DZ	18301-11	641
L8541_	EDCM/EDCMF-VR	18301-46	719
L8561_	EDCM/EDCMF-VM5	18301-47	723
L8565_	EDCM/EDCMF-VM	18301-45	715
L8580_	EDC-P	18301-09	621
L85L1_	EDC-LV	18301-17	659
L85P5_	EDC-IP	18301-14	651
L8835_	EDM-VB	18301-43	707
L8840_	EDM-VR	18301-40	693
L8850_	EDM-VF	18301-42	703
L8860_	EDM-VM	18301-41	697
L8875_	EDM-VEI	18301-44	711
LF_	LF1, LF2	18305-04	915
LF1_1_	LC1F-Z	18305-01	889
LF1_1STR3_	SMV2.0	18305-10	927
LF1_2_	LC1F-DZ	18305-02	897
LF2_1_	LC2F-DZ	18305-03	907
ME - MR	ME - MR Series	18306-01	979
MT	MT Series	18306-04	1225
TC-00_	TC-00	18301-60	731
TC-01_	TC-01	18301-61	735

Code	Description	Data sheet	Page
TC-02_	TC-02	18301-62	739
TC-03_	TC-03	18301-63	743
TC-04_	TC-04	18301-64	747
TE-00_	TE00	18300-01	445
TE-01_	TE01	18300-02	449
TE-03_	TE03	18300-03	453
TE-04_	TE04	18300-04	457
TE-05_	TE05	18300-05	461
TE-06_	TE06	18300-06	465
TE-07_	TE07	18300-07	469
TE-10_	TE10	18300-09	473
TE-11_	TE11	18300-10	477
TE-13_	TE-13	18300-13	481
TE-16_	TE-16	18300-14	485
TI-00_	TI-00	18301-25	669
TI-03_	TI-03	18301-26	673
TI-04_	TI-04	18301-27	677
TI-C2_	TI-C2	18301-28	683

По вопросам продаж и поддержки обращайтесь:

Алматы (7273)495-231
Архангельск (8182)63-90-72
Астрахань (8512)99-46-04
Барнаул (3852)73-04-60
Белгород (4722)40-23-64
Брянск (4832)59-03-52
Владивосток (423)249-28-31
Волгоград (844)278-03-48
Вологда (8172)26-41-59
Воронеж (473)204-51-73
Екатеринбург (343)384-55-89
Иваново (4932)77-34-06
Ижевск (3412)26-03-58
Иркутск (395)279-98-46
Казань (843)206-01-48
Калининград (4012)72-03-81
Калуга (4842)92-23-67
Кемерово (3842)65-04-62
Киров (8332)68-02-04
Краснодар (861)203-40-90
Красноярск (391)204-63-61
Курск (4712)77-13-04
Липецк (4742)52-20-81
Магнитогорск (3519)55-03-13
Москва (495)268-04-70
Мурманск (8152)59-64-93
Набережные Челны (8552)20-53-41
Нижний Новгород (831)429-08-12
Новокузнецк (3843)20-46-81
Новосибирск (383)227-86-73
Омск (3812)21-46-40
Орел (4862)44-53-42
Оренбург (3532)37-68-04
Пенза (8412)22-31-16
Пермь (342)205-81-47
Ростов-на-Дону (863)308-18-15
Рязань (4912)46-61-64
Самара (846)206-03-16
Санкт-Петербург (812)309-46-40
Саратов (845)249-38-78
Севастополь (8692)22-31-93
Симферополь (3652)67-13-56
Смоленск (4812)29-41-54
Сочи (862)225-72-31
Ставрополь (8652)20-65-13
Сургут (3462)77-98-35
Тверь (4822)63-31-35
Томск (3822)98-41-53
Тула (4872)74-02-29
Тюмень (3452)66-21-18
Ульяновск (8422)24-23-59
Уфа (347)229-48-12
Хабаровск (4212)92-98-04
Челябинск (351)202-03-61
Череповец (8202)49-02-64
Ярославль (4852)69-52-93

Россия (495)268-04-70
Киргизия (996)312-96-26-47
Казахстан (7172)727-132

rhx@nt-rt.ru || https://rexroth.nt-rt.ru/